FIRST GENERATION ACURA LEGEND COUPE OWNERS MANUAL

Finally! Due to Honda taking too long to do something about the Acura Legend G1 manual on their website we, the community, have taken action!

Here, in its complete form, is the 1987 Acura Legend Coupe manual. Please note there are 1988, 1989 and 1990 supplementals. They are located at the bottom of the document, in what I hope to be chronological order. Please notify me of any mistakes I have made in the creation of this document. If there are mistakes in the original manual I am willing to add a community supplemental. Thank you, maytagman.

GENERAL

~VIN Number Breakdown.....6
~General Info.....7-21
~Abbreviations Used.....22
~Special Tools.....23
~Specs.....28-39
~Maintenance Schedule.....40
~Tune Up.....41-49

ENGINE SECTION

~Timing Belt.....50
~Cylinder Heads.....57
~Engine Removal/Installation.....68-75
~Intake Manifold.....76
~Exhaust System.....76-80
~Cooling System.....81
~Engine Block (all internal components).87-105
~Oil (Lubrication) System.....106
~Component Locations.....114
~Vacuum System and Diagrams.....118
~Electrical Components Diagrams.....129

PGM-FI (Check Engine) SYSTEM

~Symptoms to Systems Chart.....132
~ECU Codes/Testing Procedure.....134
~O2 Senors.....140
~Mixture Compensation (Non USDM).....142
~MAP Sensor.....144
~Crank/CYL Sensor.....148
~TW Sensor.....152
~Throttle Angle Sensor.....154
~TDC Sensor.....156
~TA Sensor.....159
~IMA Sensor.....161
~PA Sensor.....163
~Ignition Output Signal.....165
~Vehicle Speed Pulser.....167
~Ignition Timing Adjuster.....169

IDLE CONTROL SYSTEM

~System to Sub-System chart.....161
~EACV..... 172
~Starter Signal.....175
~Alternator FR Signal.....176
~A/T Shift Poisition Signal.....178
~P/S Oil Pressure Signal.....180
~M/T Neutral Switch Signal.....181
~Clutch Switch Signal.....182
~Fast Idle Control.....184
~Idle Speed.....185

FUEL SYSTEM

~Symptom to Subsystem Chart.....186
~Fuel Pressure (Inspection/Relieving)....187
~Fuel Injectors.....189
~Injector Resistor.....190
~Pressure Regulator.....190
~Fuel Filter.....196
~Fuel Pump.....197
~Main Relay.....198
~Fuel Tank.....201

AIR INTAKE SYSTEM

~Symptom to Subsystem Chart.....202
~Throttle Cable.....203
~Throttle Body.....204
~Dashpot System.....206
~Bypass Control System.....207

EMISSIONS CONTROL SYSTEM

~Symptom to subsystem chart.....212
~Tail Pipe Emmison.....213
~Catalytic Converter.....213
~Air Injection System.....214
~EGR System.....216
~PCV System.....220
~Evaporative Emissions Control.....221
~Resonator Control System.....223

CLUTCH

~Clutch and Manual Transmission.....225-248

AUTOMATIC TRANSMISSION

~Auto Tranny and flow charts.....249-306

POWER STEERING

~Power Steering System.....307-359

SUSPENSION

~Suspension System.....360-384

BRAKES (including ABS)

~Braking System.....385-456

BODY

~Doors/Windows.....457
~Sunroof (Removal/Installation).....492
~Seats..... ..500
~Console..... .508
~Carpet..... .509
~Dash..... .510-513
~Bumpers..... 514-516
~Hood/Trunk.....516-522

CLIMATE CONTROL SYSTEM

~Heater..... ..523
~Auto Climate Control.....551
~A/C Compressor.....594
~Evaporator/Condensor.....602

ELECTRICAL SYSTEM

~Overview..... .616-645
~Ignition Switch.....646
~Starting System.....648
~Ignition System.....660
~Charging System (alternator).....670
~Cooling Fan Control System.....674
~Gauge Assembly.....682
~Lighting System.....725
~Stereo Sound System.....754
~Clock/Horn/Trunk Pop/Cig Lighter.....759-766
~Power Door Locks.....767
~Power Seat.....774
~Sunroof..... ..784
~Power Door Locks.....789
~Power Windows/Mirrors.....798
~Wipers/Washer.....806
~Cruise Control.....822

Chassis and Engine Numbers

Vehicle Identification Number

JHM KA3 1 5 0 0 C 000001

Manufacturer Make and Type of Vehicle
JHM: HONDA MOTOR CO., LTD., JAPAN
HONDA Passenger Car.

Line/Body and Engine type
KA3: LEGEND COUPE
C27A

Body and Transmission Type
1: 2 door/5-speed Manual
2: 2 door/4-speed Automatic

Vehicle grade
5: With ALB

Fixed Code

Model Year
0: 1988

Plant
C: Saitama Factory Sayama Plant

Serial Number

Engine Serial Number

C27A1 – 1 3 00001

Engine Type
C27A1: 2.7 ℓ with catalytic converter
C27A2: 2.7 ℓ without catalytic converter

Model Year
1: 1988

Transmission Type
3: Manual
4: Automatic

Serial Number

Engine Serial Number (KQ)

C27A1 – 1 7 50001

Engine Type
C27A1: 2.7 ℓ with catalytic converter

Model Year
1: 1988

Applicable Area
7: KQ

Serial Number
Starting from NO. 50001.

Transmission Number

(Manual Transmission)

G3E4 – 1000001

Transmission Type

Serial Number

Transmission Number

(Automatic Transmission)

L5 – 2000001

Transmission Type

Serial Number

Identification Number Locations

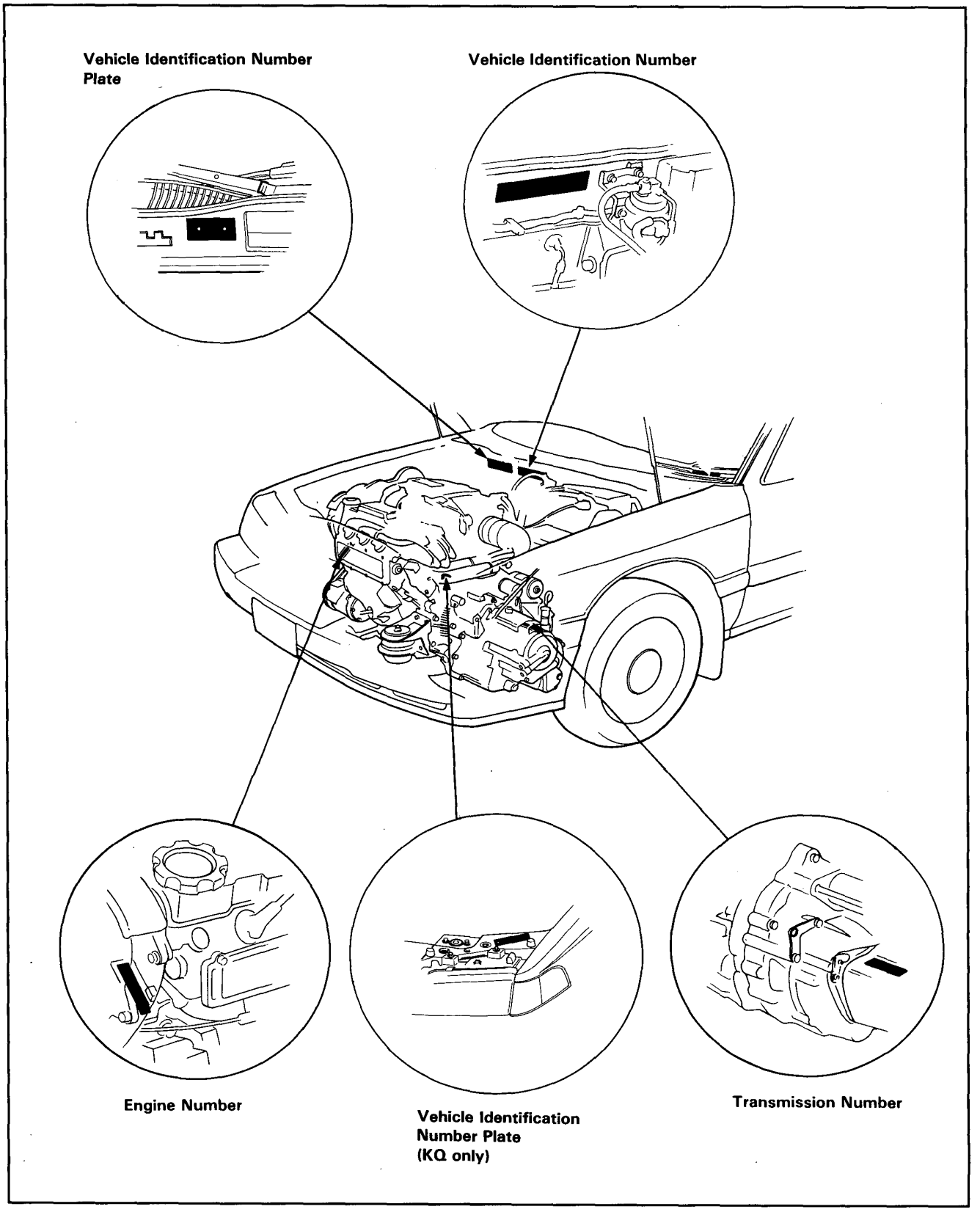

Label Locations

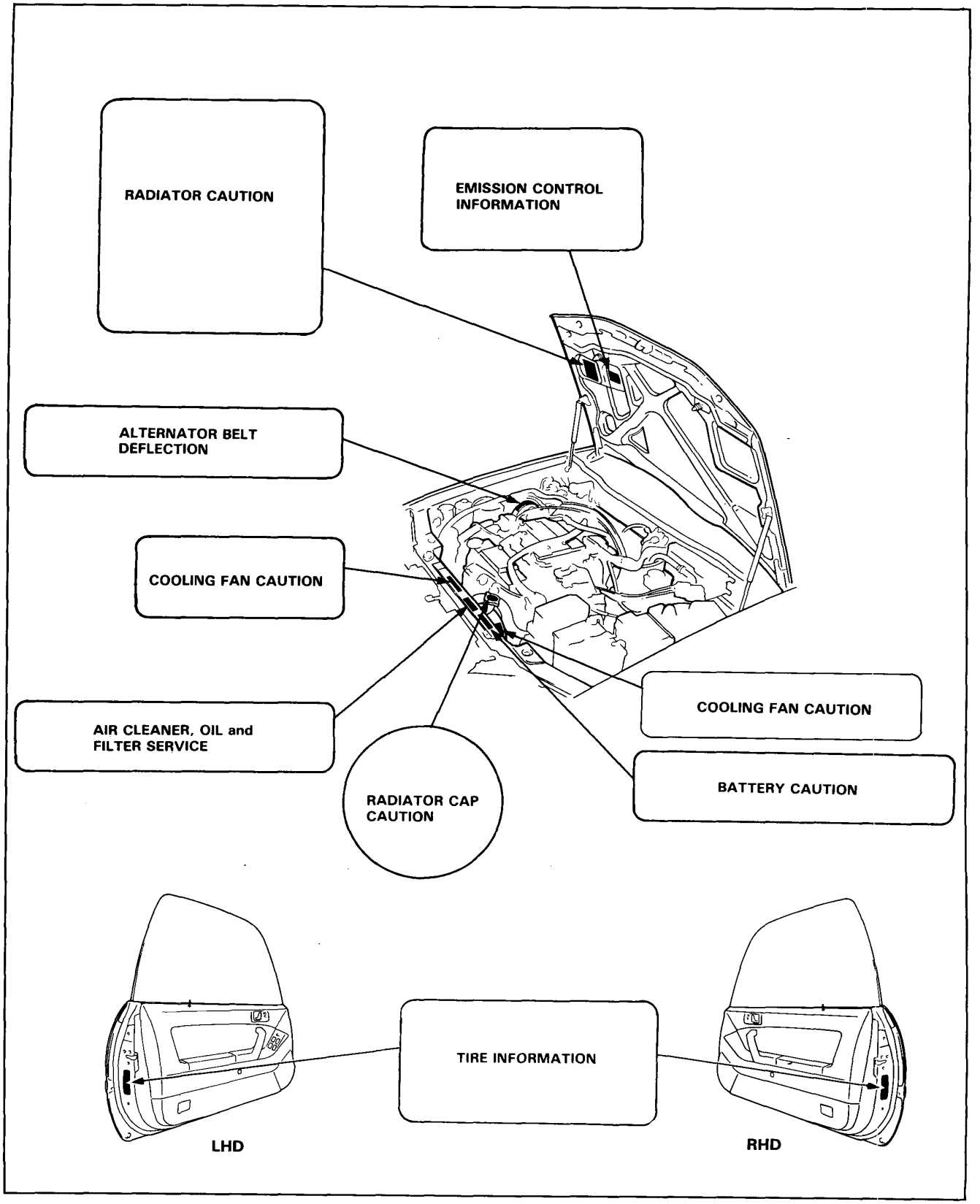

Lift and Support Points

Hoist

1. Place the lift blocks as shown.
2. Raise the hoist a few inches and rock the car to be sure it is firmly supported.
3. Raise the hoist to full height and inspect lift points for solid support.

WARNING When heavy rear components such as suspension, fuel tank, spare tire and trunk lid/hatch are to be removed, place additional weight in the trunk before hoisting. When substantial weight is removed from the rear of the car, the center of gravity may change and can cause the car to tip forward on the hoist.

NOTE: Since each tire/wheel assembly weighs approximately 14 kg (30 lbs), placing the front wheels in the trunk can assist with the weight transfer.

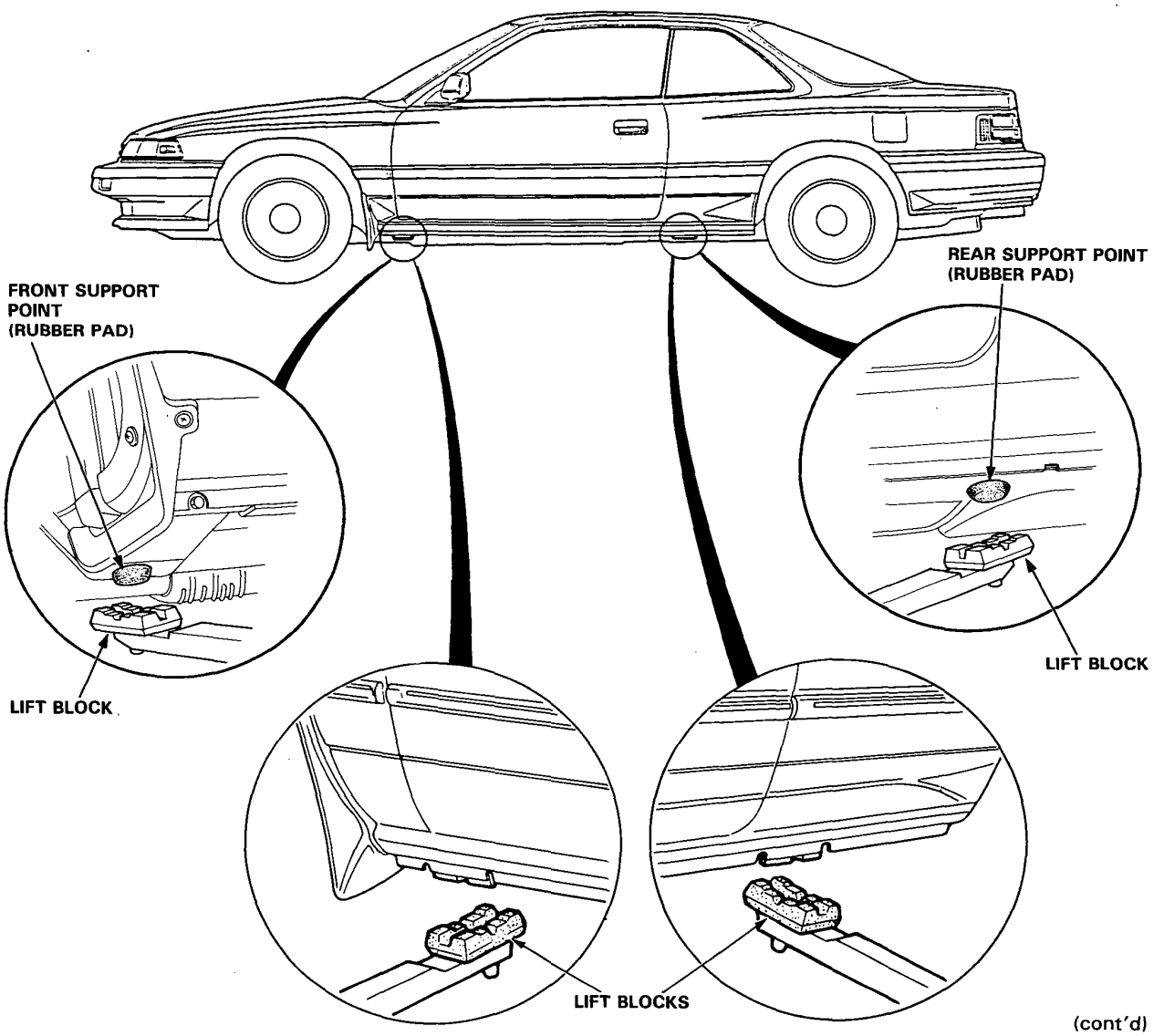

(cont'd)

Lift and Support Points (cont'd)

Floor Jack

1. Set the parking brake and block the wheels that are not being lifted.
2. When lifting the rear of the car, put the gearshift lever in reverse (Automatic in PARK).
3. Raise the car high enough to insert the safety stands.
4. Adjust and place the safety stands as shown on page 1-7 so the car will be approximately level, then lower the car onto them.

WARNING

- **Always use safety stands when working on or under any vehicle that is supported by only a jack.**
- **Never attempt to use a bumper jack for lifting or supporting the car.**

Front

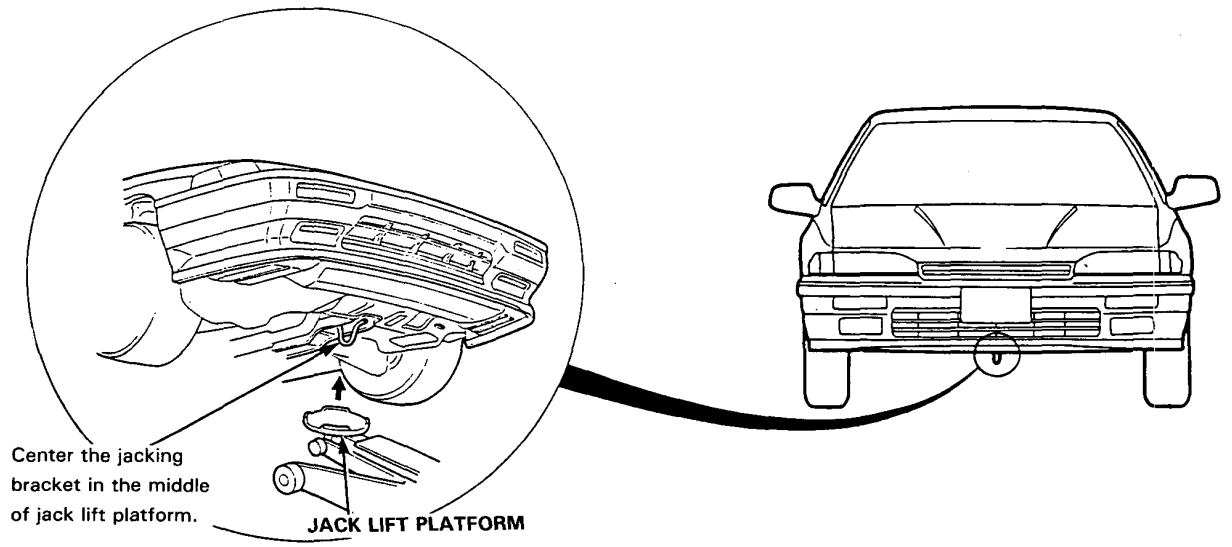

Rear

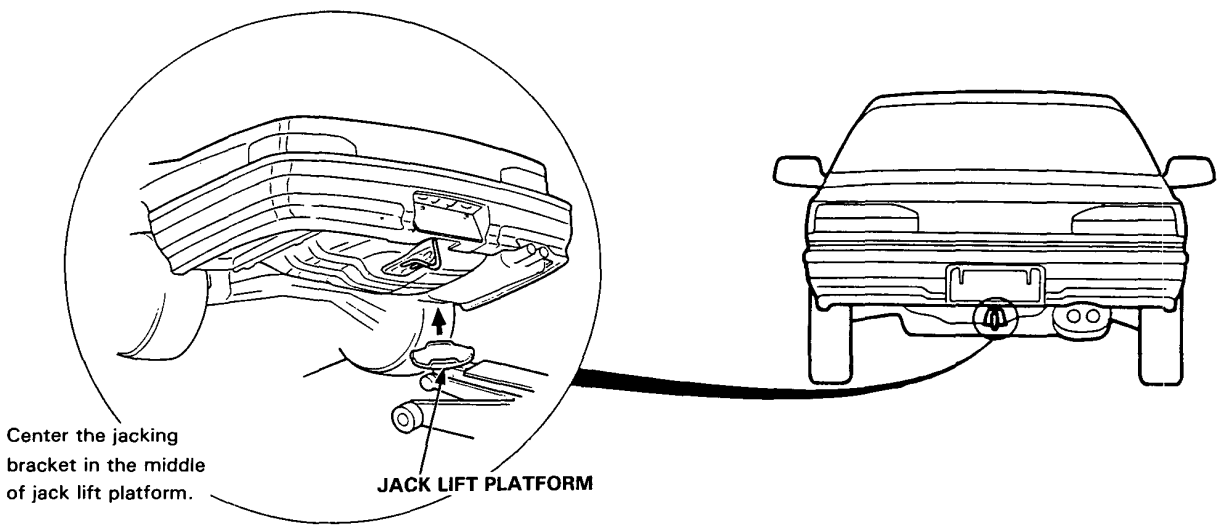

Safety Stands

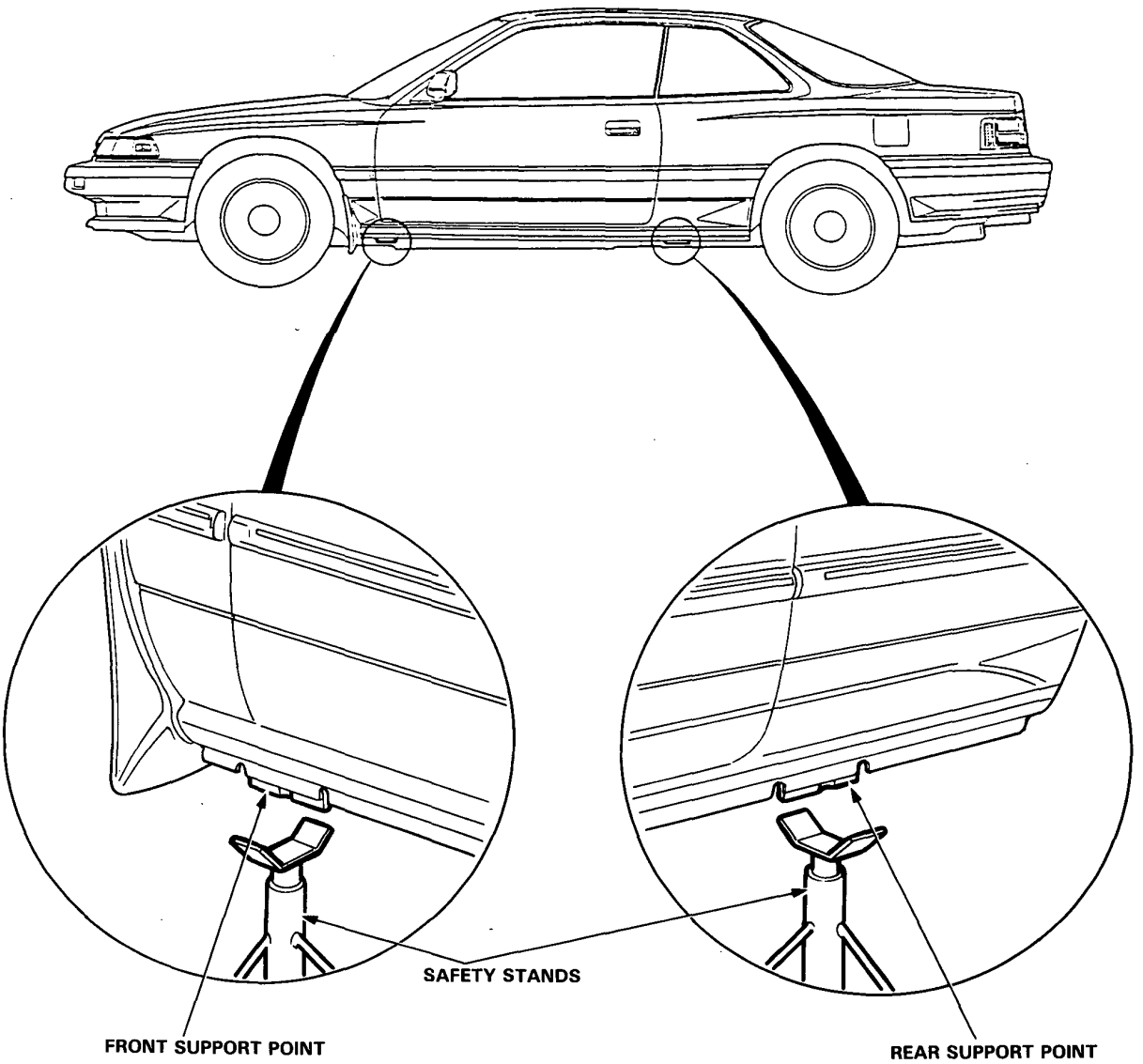

Towing

If possible, always tow the car with the front wheels off the ground. The tow truck driver should position wood spacer blocks between your car's frame and his chains and lift straps to avoid damaging the bumper and the body under it.
Do not use the bumpers to lift the car or to support the car's weight while towing. Check local regulations for towing with a rope or tow bar. A rope may be attached to the hook as shown in the illustration.
Do not attach a tow bar to either bumper.

If the car is to be towed with the front wheels on the ground, observe the following precautions:

1. Wheels and axles must not be touching the body or frame.

2. Turn the ignition key to the "I" position and make sure the steering wheel turns freely.

3. Select NEUTRAL in the gearbox.

4. Release the handbrake.

5. DO NOT exceed 55 km/h (35 mph) or tow for distances of more than 80 km (50 miles).

WARNING DO NOT push or tow a car to start it. The forward surge when the engine starts could cause a collision. Also, under some conditions, the catalytic converter (on some types) could be damaged. A car equipped with automatic transmission gearbox cannot be started by pushing or towing.

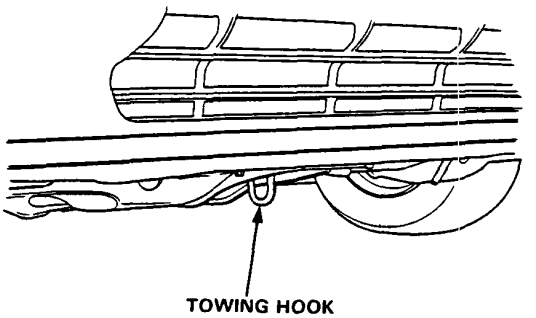

Special Caution Items For This Car

1. The engine hood opens almost vertical during installation or removal of the engine or transmission for easy operation.
   - Remove the wiper blade.
   - Fix the engine hood in the vertical position by removing the open stay mounting bolt on the hood side nd fitting it to the mounting hole nearer to the hinge.

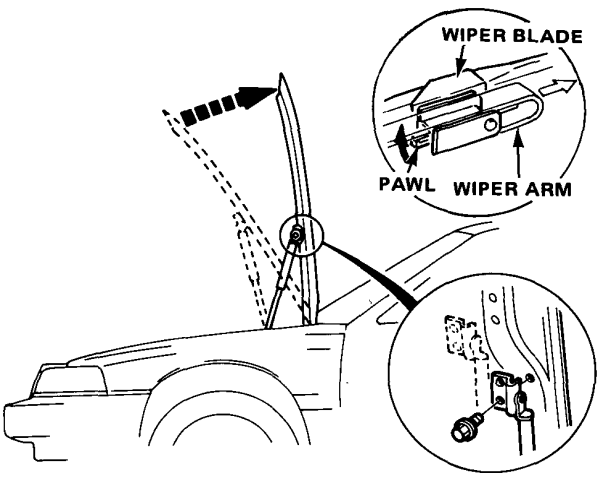

2. ALB piping system servicing
   - Disassemble the ALB piping system after relieve the high-pressured brake fluid.
   - Otherwise, the high-pressured brake fluid will burst out and it is very dangerous.
   - See section 13 how to relieve the high-pressured brake fluid.

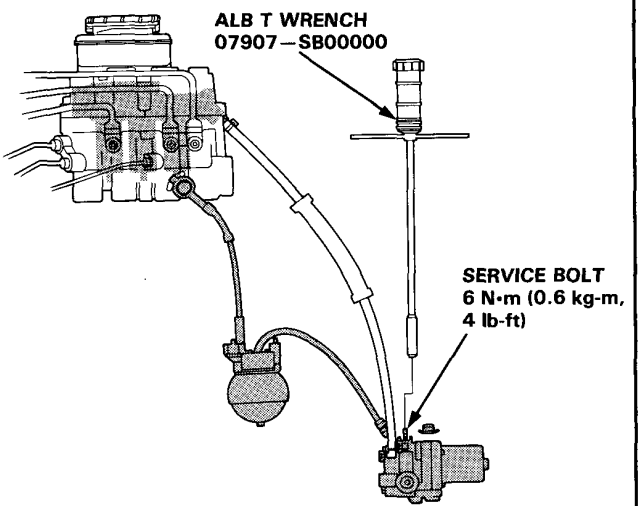

3. Fuel Line Servicing
   - Relieve fuel pressure by loosening the service bolt provided on the top of the fuel filter before disconnecting a fuel hose or a fuel pipe.

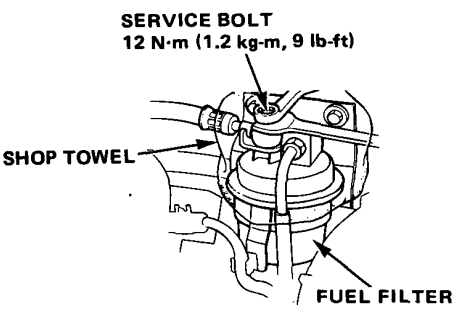

   - Be sure to replace washers, O-rings, and rubber seal with new ones when servicing fuel line parts.
   - Always apply oil to the surfaces of O-rings and seal rings before installation. Never use brake fluid, radiator fluid, vegetable oils or alcohol-based oils.

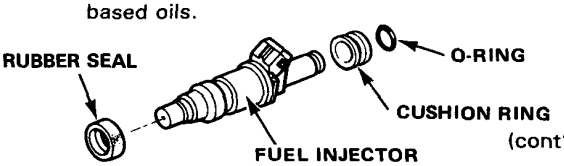

(cont'd)

Special Caution Items For This Car (cont'd)

- When assembling the flare joint of the high-pressure fuel line, clean the joint and coat with new engine oil.
- When installing an injector, check the angle of the coupler. The center line of the coupler should align with the setting mark on the injector holder.

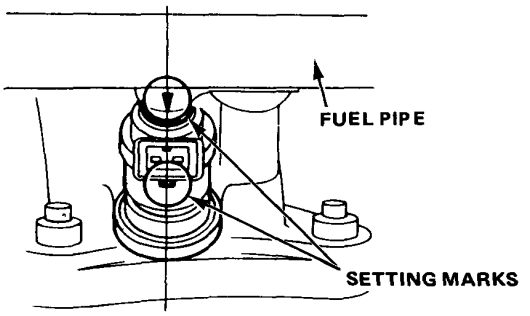

4. Inspection for fuel leakage
   - After assembling fuel line parts, turn ON the ignition switch (do not operate the starter) so that the fuel pump is operated for approximately two seconds and the fuel is pressurized. Repeat this operation two or three times and check whether any fuel leakage has occurred in any of the various points in the fuel line.

5. Installation of an amateur radio for cars equipped with PGM-FI A/T, Cruise control and ALB.
   Care has been taken for the PGM-FI A/T, Cruise control and ALB control units (computer) and its wiring to prevent erroneous operation from external interference, but erroneous operation of the computer may be caused by entry of extremely strong radio waves. Attention must be paid to the following items to prevent erroneous operation of the computer.
   - The antenna and the body of the radio must be at least 200 mm (7.9 in.) away from the computer (See Section 16, Relays and Control Units Location).
   - Do not lead the antenna feeder and the coaxial cable over a long distance parallel to the wiring, and when crossing with the wiring is required, execute crossing at a right angle.
   - Do not install a radio with a large output (max. 10 W).

6. Apply liquid gasket to the transmission, oil pump cover, right side cover and water outlet. Use HONDA PARTS NO. 08740—99986 as a liquid gasket.
   - Check that the mating surfaces are clean and dry before applying liquid gasket. Degrease the mating surfaces if necessary.
   - Apply liquid gasket evenly, being careful to cover all the mating surface.
   - To prevent leakage of oil, apply liquid gasket to the inner threads of the bolt holes.
   - Do not allow liquid gasket to stand for more than 20 minutes before assembly.
   - Fill the case with clean engine oil or coolant 30 minutes after assembly.

7. Since a V-type 6-cylinder engine is used, carefully prevent removed bolts, nuts and washers from falling into the valley between V-type cylinders around the intake manifold during maintenance.
   - Putting shop towel in the gap in the V-bank vallery is recommended to prevent dropping.

8. The oil filter case is removed from the engine block during engine removal and installation. If foreign matter enters the oil path, the lubrication system may clog. Be sure to fit a blind plug to the oil hole.

9. The layout of the engine and transmission is the reverse of that of conventional Honda cars. The engine is mounted on the right side, and the transmission on the left. The direction of engine revolution, therefore, is reversed. It is clockwise as viewed from the timing belt pulley.
   - After timing belt adjustment, always rotate the engine clockwise as viewed from the pulley side.

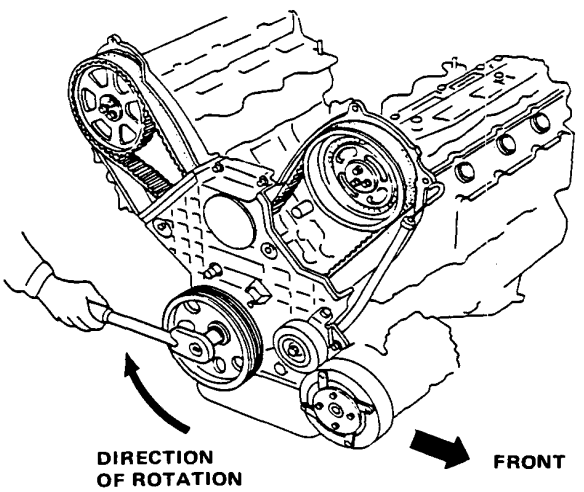

10. Cylinder Nos. are No. 1, No. 2 and No. 3 from the timing belt side of the rear bank cylinders, and No. 4, No. 5 and No. 6 from the timing belt side of the front bank cylinders.

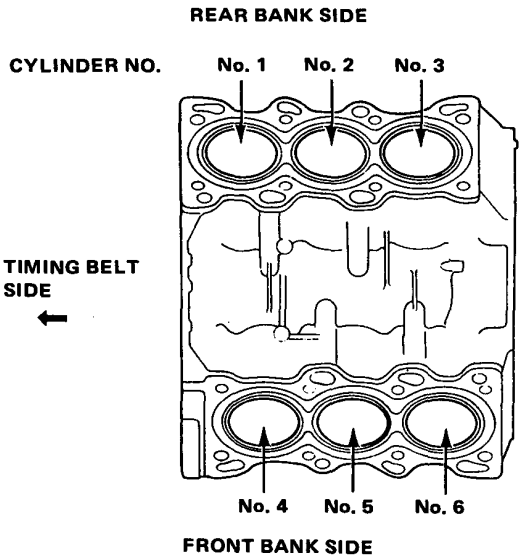

11. The hydraulic tappet has been adopted to eliminate the need for valve clearance adjustment. After disassembling the valve, head and cylinder or after maintenance of the valve train, always carry out the following operations:
    - Bleed the air from the chamber when inspecting the hydraulic tappet (section 5).
    - Clean each oil path in the engine. Use an air nozzle to eliminate any clogging with dirt, etc.
    - Before installing the camshaft bearing caps, fill the oil path in the hydraulic tappet with engine oil from the oil filler on the cylinder head (section 5).
    - After installing the camshaft, properly adjust the exhaust rocker arm adjusting screw (section 5).

CAUTION: Observe all safety precautions and notes while working.

1. Protect all painted surfaces and seats against dirt and scratches with a clean cloth or vinyl cover.

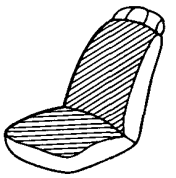

2. Work safely and give your work your undivided attention. When either the front or rear wheels are to be raised, block the remaining wheels securely. Communicate at frequently as possible when a work involves two or more workers. Do not run the engine unless the shop or working area is well ventilated.

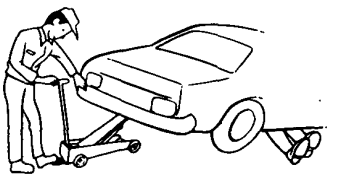

3. Prior to removing or disassembling parts, they must be inspected carefully to isolate the cause for which service is necessary. Observe all safety notes and precautions and follow the proper procedures as described in this manual.

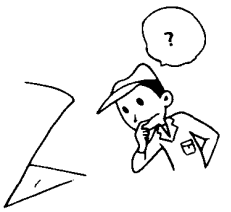

Mark or place all removed parts in order in a parts rack so they can be reassembled in their original places.

(cont'd)

(cont'd)

4. Use the special tool when use of such a tool is specified.

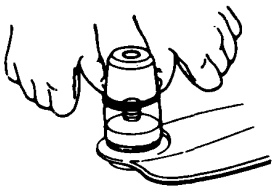

5. Parts must be assembled with the proper torque according to the maintenance standards established.

6. When tightening a series bolts or nuts, begin with the center or large diameter bolts and tighten them in crisscross pattern in two or more steps.

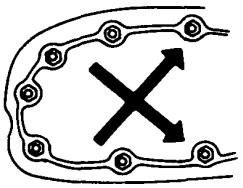

7. Use new packings, gaskets, O-rings and cotter pins whenever reassembling.

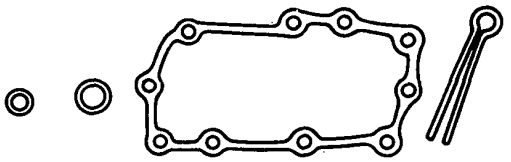

8. Use genuine HONDA parts and lubricants or those equivalent. When parts are to be reused, they must be inspected carefully to make sure they are not damaged or deteriorated and are in good usable condition.

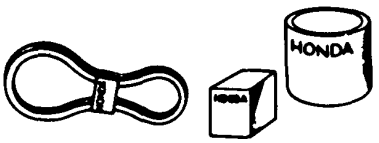

9. Coat or fill parts with specified grease as specified (page 4-2). Clean all removed parts in or with solvent upon disassembly.

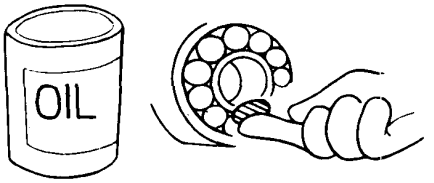

10. Brake fluid and hydraulic components
    - When replenishing the system, use extreme care prevent dust and dirt from entering the system.
    - Do not mix different brands of fluid as they may not be compatible.
    - Do not reuse drained brake fluid.
    - Brake fluid can cause damage to painted surfaces. Wipe up spilled fluid at once.
    - After disconnecting brake hoses or pipes, be sure plug the openings to prevent loss of brake fluid.
    - Clean all disassembled parts only in clean BRAKE FLUID. Blow open all holes and passages with compressed air.

    - Keep disassembled parts from air-borne dust and abrasives.
    - Check that parts are clean before assembly.

11. Avoid oil or grease getting on rubber parts and tubes, unless specified.

12. Upon assembling, check every possible part for proper installation and movement or operation.

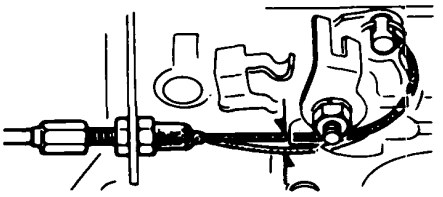

- Before making any repairs on electric wires or parts, disconnect the battery cables from the battery staring with the negative (−) terminal.

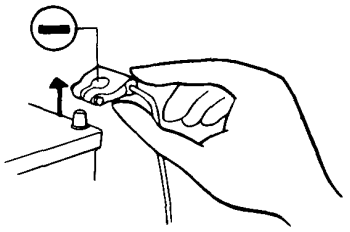

- After making repairs, check each wire or part for proper routing and installation. Also check to see that they are connected properly.
- Always connect the battery positive (+) cable first, then connect the negative (−) cable.

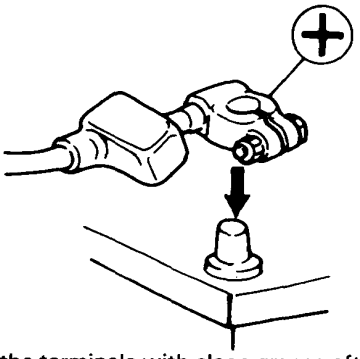

- Coat the terminals with clean grease after connecting the battery cables.
- Don't forget to install the terminal cover over the positive battery terminal after connecting.
- Before installing a new fuse, isolate the cause and take corrective measures, particularly when frequent fuse failure occurs.

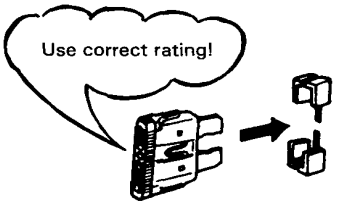

- Be sure to install the terminal cover over the connections after a wire or wire harness has been connected.

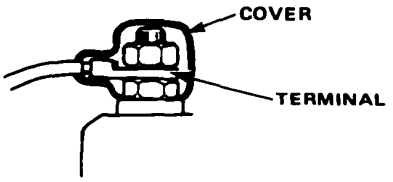

- When removing locking couplers, be sure to disengage the lock before disconnecting.
- Couplers may be of two types, those in which the lock is pressed to remove, and those in which the lock is pulled up to remove. Be sure to ascertain the type of locking device before beginning work. The following is a depiction of the means of disconnecting various typical couplers.

Press to disengage:

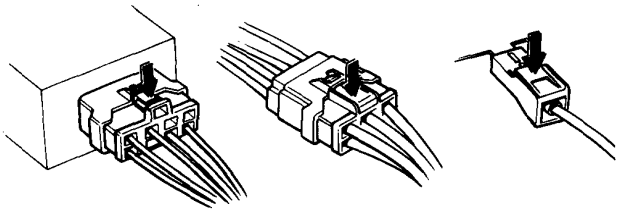

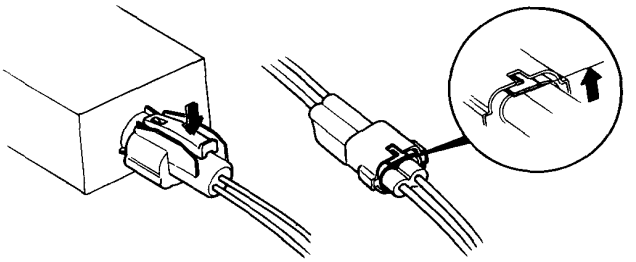

Pull up to disengage:

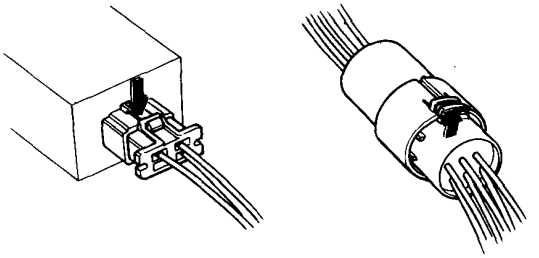

- When disconnecting locks, first press in the coupler tightly (to provide clearance to the locking device), then operated the tab fully and remove the coupler in the designated manner.

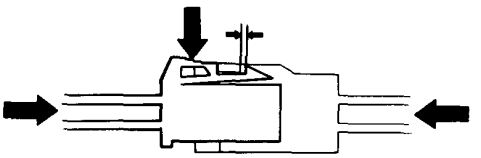

(cont'd)

Electrical (cont'd)

- When disconnecting a coupler, pull it off from the mating coupler by holding on both couplers.
- Never try to disconnect couplers by pulling on their wires.

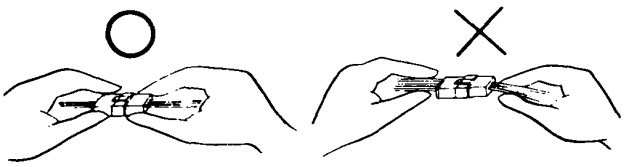

- Before connecting couplers, check to see that the terminals are in place and are not bent or distorted.

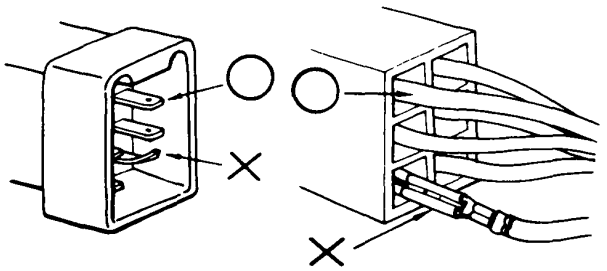

- Insert couplers fully until they will no longer go.
- Some couplers have locking tabs that must be aligned and engaged securely.
- Don't use wire harnesses with a loose wire or coupler.

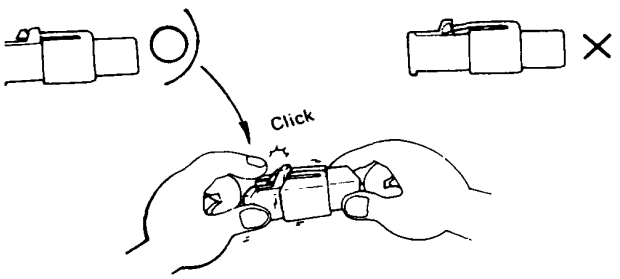

- Place the plastic cover over the mating coupler after reconnecting. Also check that the cover is not distorted.

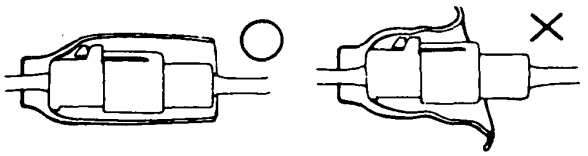

- Before connecting, check each connector cover for damage. Also make sure that the female connector is tight and not loosened from the previous use.

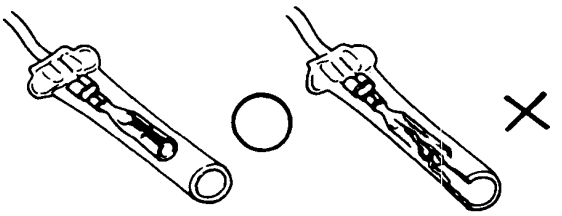

- Insert male connectors into the female connectors fully until they will no longer go.
- Be sure that plastic cover is placed over the connection.
- Position the wires so that the open end of the cover is not facing upward.

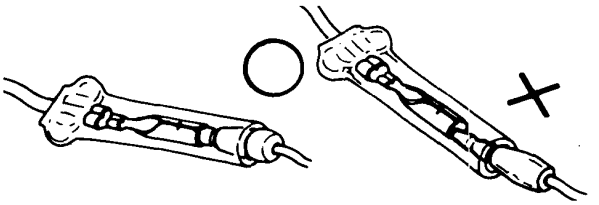

- Secure wires and wire harnesses to the frame with their respective wire bands at the designated locations. Position the wiring in the bands so that only the insulated surfaces contact the wires or wire harnesses.

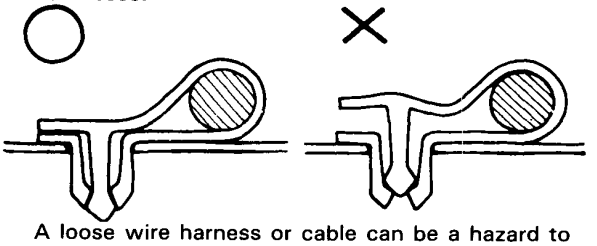

- A loose wire harness or cable can be a hazard to safety. After clamping, check each wire for security in its clamp.

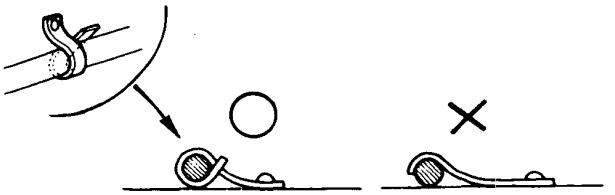

- Do not squeeze wires against the weld when a weld-on clamp is used.

- After clamping, check each harness to be certain that it is not interferring with any moving or sliding parts of the vehicle.
- Keep wire harnesses away from the exhaust pipes and other hot parts.

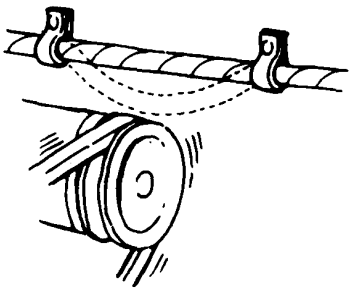

- Always keep a safe distance between wire harnesses and any heated parts.

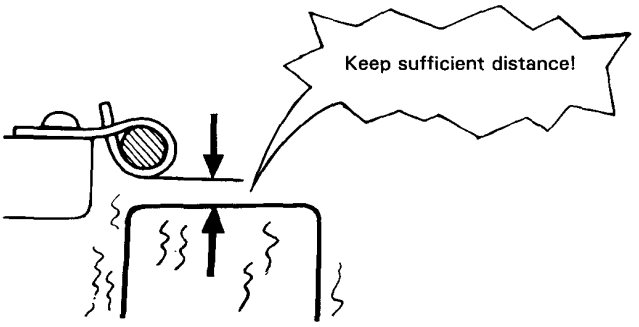

- Do not bring wire harnesses in direct contact with sharp edges or corners.
- Also avoid contact with the projected ends of bolts, screws and other fasteners.

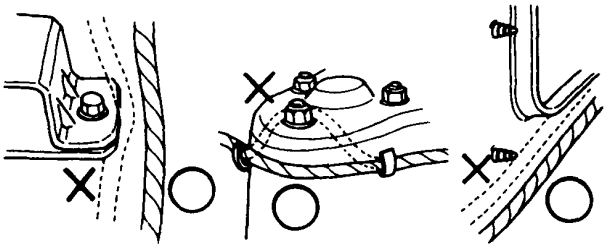

- Route harnesses so they are not pulled taut or excessively slackened.

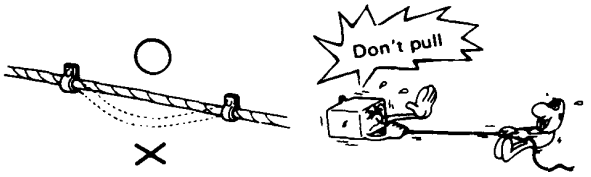

- Protect wires and harnesses with tape or a tube if they are in contact with a sharp edge or corner.

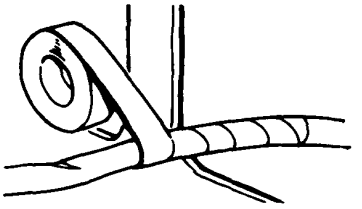

- Clean the attaching surface thoroughly if an adhesive is used. First, wipe with solvent or alcohol if necessary.

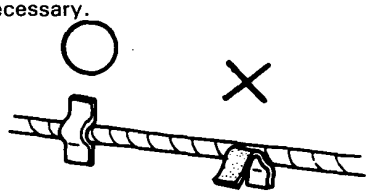

- Seat grommets in their grooves properly.

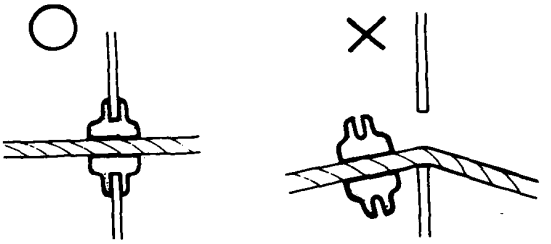

- Do not damage the insulation when connecting a wire.
- Do not use wires or harnesses with a broken insulation. Repair by wrapping with protective tape or replace with new ones if necessary.

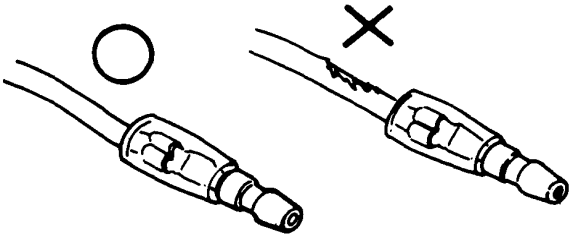

- After installing parts, make sure that wire harnesses are not pinched.

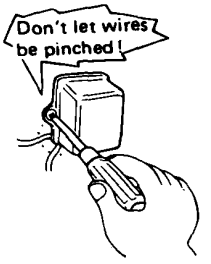

(cont'd)

Electrical (cont'd)

- After routing, check that the wire harnesses are not twisted or kinked.

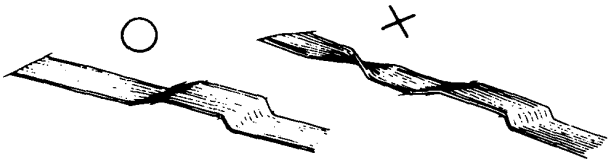

- Wire harnesses should be routed so that they are not pulled taut, slackened excessively, pinched, or interfering with adjacent or surrounding parts in all steering positions.

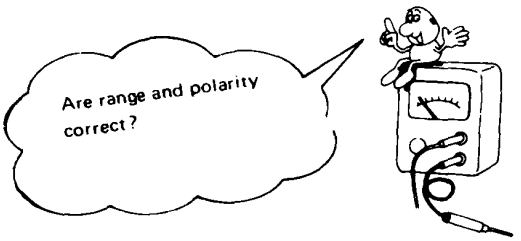

- When using the Service Tester, follow the manufacturer's instructions and those described in the Shop Manual.

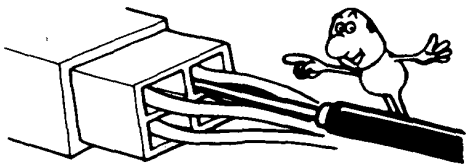

- Do drop parts.

- Rust is the enemy of all finished surfaces. Before connecting connectors and couplers, check the terminals and remove, if any, rust using a fine sand paper or emery cloth.

Symbol Marks

The following symbols stand for:

:Apply engine oil.

:Apply brake fluid.

:Apply grease.

:Apply Automatic Transmission Fluid.

:Apply Power Steering Fluid.

①, ②, ③,----- / ❶, ❷, ❸,----- : Sequence of removal.

Electrical (cont'd)

- After routing, check that the wire harnesses are not twisted or kinked.

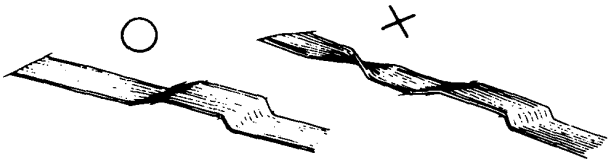

- Wire harnesses should be routed so that they are not pulled taut, slackened excessively, pinched, or interfering with adjacent or surrounding parts in all steering positions.

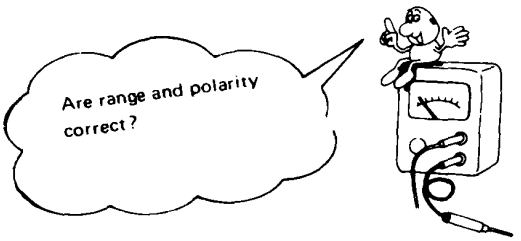

- When using the Service Tester, follow the manufacturer's instructions and those described in the Shop Manual.

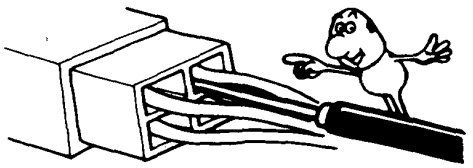

- Do drop parts.

- Rust is the enemy of all finished surfaces. Before connecting connectors and couplers, check the terminals and remove, if any, rust using a fine sand paper or emery cloth.

Symbol Marks

The following symbols stand for:

:Apply engine oil.

:Apply brake fluid.

:Apply grease.

:Apply Automatic Transmission Fluid.

:Apply Power Steering Fluid.

①, ②, ③,----- / ❶, ❷, ❸,----- : Sequence of removal.

Abbreviations

A/C	Air Conditioner
A/T	Automatic Transmission
ATF	DEXRON®II Automatic Transmission Fluid
BAT	Battery
CATA	Catalytic Converter
EACV	Electronic Air Control Valve
ECU	PGM-FI Electronic Control Unit
EGR	Exhaust Gas Recirculation
EACV	Electronic Air Control Valve
EX	Exhaust
GND	Ground
IG	Ignition
IN	Intake
INT	Intermittent
L.	Left Side
LHD	Left Hand Drive
M/T	Manual Transmission
PCV VALVE	Positive Crankcase Ventilation Valve
PGM-FI	Programmed Fuel-Injection
P/S	Power Steering
R.	Right Side
RHD	Right Hand Drive
SOL. V	Solenoid Valve
SW	Switch
TA	Intake Air Temperature
TDC	Top Dead Center
TW	Coolant Temperature
P	Parking
R	Reverse
N	Neutral
D	Drive Range
S	Sport Range
2	Fixed at 2nd Range

New Tools

Ref. No.	Tool Number	Description	Q'ty	Remarks	Section
①	07HAF–PL20101	Piston Base Head	1		5
②	07HAE–PL50100	Compressor Attachment	1	See L5 Automatic Transmission Shop Manual (62PL500)	—
③	07HAF–PL50100	Gear Installer	1		—
④	07GAJ–SD40100	Brake Booster Rod Adjustment Gauge	1		13

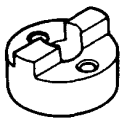

①

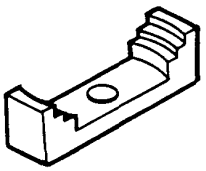

②

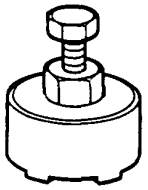

③

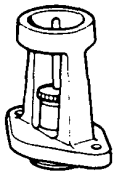

④

Existing Tools (Common with other Models)

5. Engine

No.	Tool Number	Description	Q'ty	Remarks
①	07944–6110200	Pin Driver, 8 mm	1	
②	07941–6920003	Ball Joint Remover	1	07941–6920002 may also be used.
③	07966–6340011	Engine Block Hanger	1	
④	07925–6570000	Pulley Holder	1	Camshaft Pulley
⑤	07757–0010000	Valve Spring Compressor	1	07957–3290001 may also be used.
⑥	07942–6110000	Valve Guide Driver/Remover	1	07942–6570100 may also be used.
⑦	07743–0020000	Valve Guide Driver	1	
⑧	07984–6110000	Valve Guide Reamer	1	07934–6570000 may also be used.
⑨	07947–SB00200	Oil Seal Driver	1	Camshaft
⑩	07GAF–PH60300	Piston Pin Base Insert	1	
⑪	07GAF–PH70100	Pilot Collar	1	
* ⑫	07HAF–PL20101	*Piston Base Head	1	
⑬	07973–6570002	Piston Pin Dis/Assembly Tool Set	1	
⑬-1	07973–6570500	Piston Base	(1)	Component Tools
⑬-2	07973–6570600	Piston Base Spring	(1)	Component Tools
⑭	07924–PD20003	Ring Gear Holder	1	07924–PD20002 may also be used.
⑮	07746–0030100	Driver	1	
⑯	07947–SB00200	Oil Seal Driver	1	Crankshaft Oil Seal
⑰	07749–0010000	Driver	1	07949–6110000 may also be used.
⑱	07406–0030000	Oil Pressure Gauge Adaptor	1	
⑲	07GAD–PH70200	Oil Seal Driver	1	

*New Tool

6. Fuel and Emission

No.	Tool Number	Description	Q'ty	Remarks
①	07GAZ–SE00300	R.P.M. Connecting Adaptor	1	
②	07406–0040001	Fuel Pressure Gauge	1	
②-1	07406–0040100	Pressure Gauge	(1)	Component Tools
②-2	07406–0040201	Hose Assy	(1)	Component Tools
③	07999–PD6000A	PGM-FI Test Harness	1	
④	07411–0020000	Digital Circit Tester	1	
⑤	07GMJ–ML80100	Test Harness	1	

7. Clutch

No.	Tool Number	Description	Q'ty	Remarks
①	07924–PD20003	Ring Gear Holder	1	07924–PD20002
②	07GAG–PF50100	Clutch Disc Alignment Tool	1	

Existing Tools (Common with Other Models)

8. Manual Transmission

No.	Tool Number	Description	Q'ty	Remarks
①	07744–0010400	Pin Driver, 5.0 mm	1	07944–6110100 may also be used.
②	07749–0010000	Driver	1	07949–6110000 may also be used.
③	07746–0010500	Attachment, 62 x 68 mm	1	07947–6340200 may also be used.
④	07936–6340000	Bearing Remover Set	1	
⑤	07936–6890101	Bearing Puller Attachment	1	Use changed to 07936–6340000 attachment.
⑥	07746–0010300	Attachment, 42 x 47 mm	1	
⑦	07GAJ–PG20101	Mainshaft Thrust Clearance Inspection Tool	1	
⑧	07979–PJ40000	Mainshaft Stand Base	1	
⑨	07746–0030100	Driver	1	
⑩	07GAD–PG20100	Pin Driver, 5.0 mm	1	
⑪	07GAD–PG40100	Oil Seal Driver	1	
⑫	07GAJ–PG20200	Preload Inspection Tool	1	

9. Automatic Transmission

No.	Tool Number	Description	Q'ty	Remarks
①	07GAB–PF50100	Mainshaft Holder	1	
②	07GAE–PG40000	Clutch Spring Compressor Set	1	
③	07749–0010000	Driver	1	07949–6110000 may also be used.
④	07947–6340500	Driver Attachment, E	1	
⑤	07936–6340000	Bearing/Transmission Case Puller	1	
⑥	07GAC–PG40101 or 07HAC-PK40100	Housing Puller	1	
⑦	07GAE–PG40001	Clutch Spring Compressor Set	1	
* ⑧	*07HAE–PL50100	*Compressor Attachment	1	
⑨	07GAE–PG40200	Compressor Bolt Assembly	1	
⑩	07960–6120100	Compressor Attachment	1	
* ⑪	*07HAF–PL50100	*Gear Installer	1	
⑫	07936–6340000	Bearing Remover Set	1	
⑬	07GAC–PF40210	Bearing Remover Attachment	1	Use changed to 07936–6340000 attachment.
⑭	07746–0010500	Attachment, 62 x 68 mm	1	
⑮	07406–0020003	Oil Pressure Gauge Set	1	
⑮-1	07406–0020201	Oil Pressure Gauge Hose	(3)	Component Tool
⑯	07947–6340201	Driver Attachment, E	1	
⑰	07746–0030100	Driver	1	
⑱	07GAD–PG20100	Pin Driver, 5.0 mm	1	
⑲	07GAD–PG40100	Oil Seal Driver	1	
⑳	07GAJ–PG20200	Preload Inspection Tool	1	

*New Tools

10. Driveshafts

No.	Tool Number	Description	Q'ty	Remarks
①	07749–0010000	Driver	1	
②	07746–0040900	Pilot, 40 mm	1	
③	07965–SD90100	Support Base	1	
④	07746–0010400	Attachment, 52 x 55 mm	1	
⑤	07746–0010500	Attachment, 62 x 68 mm	1	
⑥	07965–SD90200	Support Collar	1	
⑦	07947–SD90200	Oil Seal Driver	1	
⑧	07947–6340201	Attachment	1	

11. Power Steering

No.	Tool Number	Description	Q'ty	Remarks
①	07916–SA50001	Locknut Wrench, 40 mm	1	
②	07406–0010200	P/S Pressure Gauge Assembly	1	
②-1	07406–0010300	Pressure Control Valve	(1)	Component tools
②-2	07406–0010400	Pressure Gauge	(1)	
③	07GAK–SE00100	P/S Joint Adaptor Kit	1	
③-1	07GAK–SE00110	Joint Adaptor (Pump)	(1)	Component tools
③-2	07GAK–SE00120	P/S Joint Adaptor (Hose)	(1)	
④	07406–0010101	Bypass Tube Joint	1	
⑤	07725–0030000	Universal Holder	1	07725–0010101 may also be used.
⑥	07953–7190000	Collar Driver	1	
⑦	07941–6920003	Ball Joint Remover	1	
⑧	07944–6110200	Pin Driver, 8 mm	1	07941–6920002 may also be used.
⑨	07746–0010300	Attachment, 42 x 47 mm	1	
⑩	07749–0010000	Driver	1	07949–6110000 may also be used.
⑪	07GAG–SD40000	P/S Tool Kit	1	
⑪-1	07GAG–SD40100	Piston Seal Ring Guide	(1)	Component tools
⑪-2	07GAG–SD40200	Piston Seal Sizing Tool	(1)	
⑪-3	07GAG–SD40300	Cylinder End Seal Slider	(1)	
⑪-4	07GAG–SD40400	End Seal Guide	(1)	
⑪-5	07GAG–SD40600	P/S Tool Kit Case	(1)	
⑫	07947–6340300	Driver Attachment	1	
⑬	07974–SA50800	Ball Joint Boot Clip Installation Guide	1	
⑭	07974–SA50600	Pinion Seal Guide	1	

12. Suspension

No.	Tool Number	Description	Q'ty	Remarks
①	07GAF–SD40100	Hub Assembly Pin	1	
②	07GAF–SD40200	Hub Assembly Driver Attachment	1	
③	07GAF–SD40300	Ball Joint Disassembly Tool Kit	1	
③-1	07GAF–SD40310	Ball Joint Remover Base	(1)	Component tools
③-2	07GAF–SD40320	Ball Joint Installer Base	(1)	
③-3	07GAF–SD40330	Ball Joint Remover/Installer	(1)	
④	07GAF–SD40700	Hub Dis/Assembly Base	1	
⑤	07GAG–SD40700	Ball Joint Boot Clip Installation Guide	1	
⑥	07HAD–SG00100	Bearing Driver Attachment	1	
⑦	07GAK–SD40101	Wheel Alignment Gauge Attachment	1	
⑧	07941–6920003	Ball Joint Remover	1	07941–6920002 may also be used.
⑨	07965–6340301	Hub Dis/Assembly Tool, Base A	1	
⑩	07749–0010000	Driver	1	07949–6110000 may also be used.
⑪	07746–0010500	Attachment, 62 x 68 mm	2	When servicing rear axle, 2 tools are reqiored:
⑫	07GAF–SE00401	Front Hub Base	1	
⑬	07965–6920201	Hub Dis/Assembly Tool B	1	
⑭	07974–SA50800	Ball Joint Boot Clip Installation Guide B	1	
⑮	07GAE–SE00101	Shock Absorber Spring Compressor	1	

Existing Tools (Common with Other Models)

13. Brakes

No.	Tool Number	Description	Q'ty	Remarks
* ①	07GAJ–SD40100	*Brake Booster Rod Adjustment Gauge	1	
②	07907–SB00000	ALB T-Wrench	1	
③	07HAE–SG00100	Brake Spring Compressor	1	
④	07508–SB0000	ALB Checker	1	
⑤	07HAJ–SG00300	ALB Checker Adaptor	1	
⑥	07914–SA50000	Snap Ring Pliers	1	
⑦	07921–0010100	Flare Nut Wrench	1	
⑧	07510–6340300	Vacuum Joint Tube, A	1	
⑨	07410–5790500	Tube Joint Adapter	1	
⑩	07404–5790300	Vacuum Gauge	1	
⑪	07HAK–SG00110	Pressure Gauge Joint Pipe	2	
⑪-1	07510–6340100	Pressure Gauge Joint Pipe	(1)	ϕ10 mm ┐ Component Tools
⑪-2	07HAK–SG00100	Pressure Gauge Joint Pipe	(1)	ϕ12 mm ┘
⑫	07410–5790100	Pressure Gauge Attachment	2	
⑬	07406–5790200	Pressure Gauge	2	

*New Tool

14. Body

No.	Tool Number	Description	Q'ty	Remarks
①	07GAZ–SE30100	Torsion Rod Assembly Tool	1	

16. Electrical

No.	Tool Number	Description	Q'ty	Remarks
①	07GAC–SE00200	Fuel Sender Wrench	1	

Standards and Service Limits

5. Engine/Cylinder Head, Valve Train

	MEASUREMENT		STANDARD (NEW)	SERVICE LIMIT
Compression	200 min^{-1} (rpm) and wide-open throttle		Nominal: 1.177 kPa (12.0 kg/cm², 171 psi) Minimum: 981 kPa (10.0 kg/cm², 142 psi) Maximum variation: 196 kPa (2 kg/cm², 28 psi)	
Cylinder head	Warpage		—	0.05 (0.002)
	Height		133 (5.24)	132.8 (5.23)
Camshaft	End play		0.05–0.15 (0.002–0.006)	0.5 (0.02)
	Oil clearance		0.045–0.081 (0.0018–0.0032)	0.10 (0.004)
	Runout		0.015 (0.0006)	0.03 (0.001)
	Cam lobe height	IN	39.460 (1.5535)	—
		EX	39.409 (1.5515)	—
Valve	Valve clearance	IN	0	—
		EX	0	—
	Valve stem O.D.	IN	6.58–6.59 (0.2591–0.2594)	6.55 (0.258)
		EX	6.55–6.56 (0.2579–0.2583)	6.52 (0.257)
	Stem-to-guide clearance	IN	0.02–0.05 (0.001–0.002)	0.08 (0.003)
		EX	0.05–0.08 (0.002–0.003)	0.11 (0.004)
	Stem installed height	IN	50.00 (1.969)	50.35 (1.982)
		EX	47.50 (1.870)	47.85 (1.884)
Valve seat	Width	IN and EX	1.25–1.55 (0.049–0.061)	2.0 (0.08)
Valve spring	Free length	IN	53.90 (2.12)	52.90 (2.08)
		EX Inner	44.95 (1.77)	43.95 (1.73)
		Outer	49.55 (1.95)	48.55 (1.91)
	Squareness	IN	—	1.89 (0.072)
		EX Inner	—	1.57 (0.062)
		Outer	—	1.73 (0.068)
Valve guide	I.D.	IN and EX	6.61–6.63 (0.260–0.261)	6.65 (0.262)
Rocker arm	Arm-to-shaft clearance		0.018–0.054 (0.0007–0.0021)	0.08 (0.003)
Push rod	Runout		—	0.02 (0.0008)
Hydraulic tappet	Compression stroke		0.01–0.08 (0.0003–0.0031)	—

5. Engine/Engine Block

	MEASUREMENT		STANDARD (NEW)	SERVICE LIMIT
Cylinder block	Warpage of deck surface		0.07 (0.003) max.	0.10 (0.004)
	Bore diameter	A	87.00–87.02 (3.4252–3.4259)	87.07 (3.4279)
	Bore taper		—	0.05 (0.002)
	Reboring limit		—	0.5 (0.02)
Piston	Skirt O.D. (At 18 mm (0.71 in) from bottom of skirt)	A	86.981–86.994 (3.4244–3.4250)	86.97 (3.4240)
		B	86.971–86.984 (3.4240–3.4246)	86.96 (3.4236)
	Clearance in cylinder		0.016–0.039 (0.0006–0.0015)	0.08 (0.003)
	Piston-to-ring clearance (top and second)		0.015–0.045 (0.0006–0.0018)	0.13 (0.005)
Piston ring	Ring end gap Top		0.20–0.35 (0.008–0.014)	0.6 (0.02)
	Second		0.35–0.50 (0.014–0.019)	0.75 (0.03)
	Oil		0.20–0.70 (0.008–0.028)	0.8 (0.03)
Connecting rod	Pin-to-rod interference		0.013–0.032 (0.0005–0.0013)	—
	Large end bore diameter		Nominal 55 (2.17)	—
	End play installed on crankshaft		0.15–0.30 (0.006–0.012)	0.40 (0.016)
Crankshaft	Main journal diameter		63.976–64.000 (2.5187–2.5197)	—
	Taper/out-of-round, main journal		0.005 (0.0002) max.	0.010 (0.0004)
	Rod journal diameter		51.976–52.000 (2.0463–2.0472)	—
	Taper/out-of-round, rod journal		0.005 (0.0002) max.	0.010 (0.0004)
	End play		0.10–0.35 (0.004–0.014)	0.45 (0.018)
	Runout		0.01 (0.0004) max.	0.015 (0.0006)
Bearings	Main bearing-to-journal oil clearance		0.024–0.048 (0.0009–0.0019)	0.05 (0.002)
	Rod bearing-to-journal oil clearance		0.026–0.050 (0.0010–0.002)	0.05 (0.002)

Unit: mm (in.)

5. Engine/Engine Lubrication

	MEASUREMENT		STANDARD (NEW)	SERVICE LIMIT
Engine oil	Capacity ℓ (U.S. qt., Imp. qt.)		5.7 (6.0, 5.0) After engine disassembly 4.5 (4.8, 4.0) After oil change, including oil filter 4.0 (4.2, 3.5) After oil change, without oil filter	
Oil pump	Displacement		55.9 ℓ (14.8 U.S. gal., 12.3 Imp. gal.) 5,000 min^{-1} (rpm)	
	Inner-to-outer rotor radial clearance Pump body-to-rotor radial clearance Pump body-to-rotor side clearance		0.04–0.18 (0.002–0.007) 0.10–0.18 (0.004–0.007) 0.02–0.07 (0.001–0.003)	0.2 (0.008) 0.2 (0.008) 0.12 (0.005)
Relief valve	Pressure setting 80°C (176°F)	At Idle	137 kPa (1.4 kg/cm², 20 psi) min.	
		At 3,000 min^{-1} (rpm)	490–569 kPa (5.0–5.8 kg/cm², 71–82 psi)	

5. Engine/Cooling

	MEASUREMENT	STANDARD (NEW)	
Radiator	Capacity (incl. heates) ℓ (U.S. qt., Imp. qt.) (Includes reservoir tank 0.7 (0.74, 0.61)	M/T: 8.8 (9.3, 7.7) A/T: 8.7 (9.2, 7.7)	
	Pressure cap opening pressure	88–118 kPa (0.9–1.20 kg/cm², 14–17 psi)	
Thermostat	Starts to open Full open Valve lift at full open	78°C ± 2 (172°F ± 3) 91°C (196°F) 8 (0.31) min.	86–90°C (187–194°F)
Water pump	Gear ratio (crankshaft) Capacity: ℓ per min/at min^{-1} (rpm)	1.044 150/6.000 (39.6 U.S. gal, 33 Imp. gal./6,000 min^{-1} (rpm)	
Cooling fan	Fan-to-core clearance Thermoswitch "ON" temperature (Low) Thermoswitch "OFF" temperature (Low) Thermoswitch "ON" temperature (High) Thermoswitch "OFF" temperature (High)	7.5 (0.29) 81°–87°C (179°–189°F) Substract 6° ± 2°C (43° ± 3°F) from the actual "ON" temperature (LOW). 87°–93°C (188°–199°F) Substract 6° ± 2°C (43° ± 3°F) from the actual "ON" temperature (HIGH).	

6. Fuel and Emissions

	MEASUREMENT	STANDARD (NEW)
Fuel pump	Delivery pressure Displacement	250 kPa (2.55 kg/cm², 36 psi) 230 cm³ (cc)/min in 10 seconds
	Relief valve opening pressure	441–588 kPa (4.5–6.0 kg/cm², 64–85 psi)
Pressure regulator	Pressure	245–255 kPa (2.5–2.6 kg/cm², 35–37 psi)
Fuel Tank	Capacity	68 ℓ (18.0 U.S. gal., 15.0 Imp. gal.)
Engine	Fast idle	1,100–1,900 min^{-1} (rpm)
	Idle speed with headlights and cooling fan off	Manual 680 ± 50 min^{-1} (rpm) with cata, 720 ± 50 min^{-1} (rpm) without cata Automatic 680 ± 50 min^{-1} (rpm) ("N" position)
	Idle CO	0.1 % with cata, 2.0 % max without cata

7. Clutch

	MEASUREMENT	STANDARD (NEW)	SERVICE LIMIT
Clutch pedal	Pedal height Stroke Pedal play Disengagement height	153 (6.0) to carpet 145–150 (5.7–5.9) 9–15 (0.4–0.6) 90 (3.5) min. to floor	— — — —
Flywheel	Clutch surface runout	0.05 (0.002) max.	0.15 (0.006)
Clutch plate	Rivet head depth Surface runout Radial play in splines Thickness	1.3 (0.05) min. 0.8 (0.03) max. 0.7–2.1 (0.028–0.083) 8.5–9.2 (0.33–0.36)	0.2 (0.008) 1.0 (0.04) 4.0 (0.16) 6.1 (0.24)
Clutch release bearing holder	I.D. Holder-to-guide sleeve clearance	35.00–35.059 (1.378–1.380) 0.05–0.15 (0.002–0.006)	35.09 (1.381) 0.22 (0.009)
Clutch cover	Uneveness of diaphragm spring	0.6 (0.02) max.	0.8 (0.03)

(cont'd)

8. Manual Transmission

	MEASUREMENT	STANDARD (NEW)	SERVICE LIMIT
Transmission oil	Capacity ℓ (U.S. qt., Imp. qt.)	2.3 (2.4, 2.0) at assembly 2.2 (2.3, 1.9) at oil change	
Mainshaft	End play Diameter of ball bearing contact area Diameter of third gear contact area Diameter of ball bearing contact area Runout	0.14–0.21 (0.006–0.083) 27.987–28.000 (1.1018–1.1024) 37.984–38.000 (1.4954–1.4961) 27.987–28.000 (1.1018–1.1024) 0.02 (0.0008) max.	Selection with 14 type shims 27.940 (1.1000) 37.930 (1.4933) 27.940 (1.1000) 0.05 (0.002)
Mainshaft third and fourth gears	I.D. End play Thickness 3rd gear 4th gear	43.009–43.025 (1.6933–1.6939) 0.06–0.21 (0.0024–0.0083) 35.42–35.47 (1.3945–1.3965) 33.45–33.47 (1.3169–1.3177)	43.080 (1.6961) 0.30 (0.012) 35.30 (1.3898) 33.33 (1.3122)
Mainshaft fifth gear	I.D. End play Thickness	43.009–43.025 (1.6933–1.6939) 0.06–0.21 (0.0024–0.0083) 31.92–31.97 (1.2567–1.2587)	43.080 (1.6961) 0.30 (0.012) 31.80 (1.2520)
Countershaft	End play Diameter of needle bearing contact area Diameter of ball bearing needle bearing contact area Diameter of low gear contact area Runout	0.10–0.35 (0.004–0.014) 33.000–33.015 (1.2992–1.2998) 24.987–25.000 (0.9837–0.9845) 39.984–40.000 (1.5742–1.5748) 0.02 (0.0008) max.	0.50 (0.02) 32.95 (1.297) 24.94 (0.982) 39.93 (1.572) 0.05 (0.002)
Countershaft low gear	I.D. End play	46.009–46.025 (1.8114–1.8120) 0.03–0.08 (0.0012–0.0031)	46.08 (1.923) Selection with 5 type shims
Countershaft second gear	I.D. End play Thickness	50.009–50.025 (1.9689–1.9695) 0.03–0.10 (0.0012–0.0039) 32.92–32.97 (1.2961–1.2980)	50.08 (1.972) Selection with 2 type collars 32.8 (1.2913)
Spacer collar (Countershaft second gear)	I.D. O.D. Length A B	36.48–36.49 (1.4362–1.4366) 43.984–44.000 (1.7317–1.7323) 28.98–29.00 (1.1409–1.1417) 29.03–29.05 (1.1429–1.1437)	36.50 (1.437) 43.94 (1.730) — —
Spacer collar (Mainshaft fourth and fifth gears)	I.D. O.D. Length A B	31.002–31.012 (1.2205–1.2209) 37.989–38.000 (1.4956–1.4961) 55.95–56.05 (2.2028–2.2067) 26.03–26.08 (1.0248–1.0268)	31.06 (1.223) 37.94 (1.494) — —
Reverse idler gear	I.D. Gear-to-reverse gear shaft clearance	20.020–20.041 (0.7882–0.7890) 0.020–0.054 (0.0008–0.0021)	20.09 (0.7909) 0.160 (0.0006)
Synchronizer ring	Ring-to-gear clearance (ring pushed against gear)	0.85–1.10 (0.0335–0.0433)	0.40 (0.016)
Shift fork	Synchronizer sleeve gear Low and 2nd gears 3rd and 4th gears 5th gear Fork-to-synchronizer sleeve clearance	8.90–9.00 (0.3504–0.3543) 8.40–8.50 (0.3307–0.3346) 5.40–5.50 (0.2126–0.2165) 0.45–0.65 (0.018–0.026)	— — — 1.0 (0.039)
Reverse shift fork	End gap Fork-to-reverse idler gear clearance Groove width Fork-to-fifth/reverse shift shaft clearance	13.0–13.3 (0.5118–0.5236) 0.5–1.1 (0.018–0.043) 7.05–7.25 (0.2776–0.2854) 0.05–0.35 (0.002–0.014)	— 1.8 (0.071) — 0.5 (0.02)
Shift arm	Width of groove in shift rod guide Shift arm-to-shift rod guide clearance Width in shift guide Shift arm-to-shift guide clearance	8.1–8.2 (0.319–0.323) 0.2–0.3 (0.008–0.012) 13.05–13.25 (0.514–0.522) 0.05–0.35 (0.002–0.014)	— 0.55 (0.022) — 0.6 (0.02)
Interlock	O.D. Interlock-to-change piece clearance	12.05–12.15 (0.4744–0.4783) 0.05–0.25 (0.002–0.010)	— 0.5 (0.02)
Ring gear	Backlash	0.085–0.142 (0.0033–0.0056)	0.2 (0.0079)
Differential carrier	Pinion shaft bore diameter Carrier-to-pinion shaft clearance Driveshaft bore diameter Carrier-to-driveshaft clearance	18.000–18.018 (0.7087–0.7094) 0.016–0.052 (0.0006–0.0020) 30.000–30.021 (1.1811–1.1819) 0.025–0.066 (0.0010–0.0026)	— 0.1 (0.004) — 0.12 (0.005)
Differential pinion gear	Backlash Pinion gear bore diameter Pinion gear-to-pinion shaft clearance	0.08–0.15 (0.003–0.006) 18.043–18.061 (0.7104–0.7111) 0.057–0.095 (0.0022–0.0037)	Selection with 8 types of washers — 0.15 (0.006)
Differential taper roller bearing	Preload N·m (kg-m, lb-ft)	1.4–2.0 (0.14–0.20, 1.0–1.4)	Selection with 20 types washers

9. Automatic Transmission

Unit: mm (in.)

	MEASUREMENT		STANDARD (NEW)	SERVICE LIMIT
Transmission oil	Capacity ℓ (U.S. qt., Imp. qt.)		3.2 (3.4, 2.8) at oil change 6.5 (6.9, 5.7) at assembly	
Hydraulic pressure	Line pressure at 2,000 min^{-1} (rpm)		814–863 kPa (8.3–8.8 kg/cm², 118–125 psi)	765 kPa (7.8 kg/cm², 111 psi)
	4th, 3rd, 2nd clutch pressure at 2,000 min^{-1} (rpm)		490–863 kPa (5.0–8.8 kg/cm², 71–125 psi)	441 kPa (4.5 kg/cm², 64 psi) with lever released 765 kPa (7.8 kg/cm², 111 psi) with throttle more than 3/8 OPEN
	1st clutch pressure at 2,000 min^{-1} (rpm)		814–863 kPa (8.3–8.8 kg/cm², 118–125 psi)	765 kPa (7.8 kg/cm², 111 psi)
	Throttle pressure B	Full closed	0	——
		Full open	814–863 kPa (8.3–8.8 kg/cm², 118–125 psi)	765 kPa (7.8 kg/cm², 111 psi)
	Modulator pressure		520–559 kPa (5.3–5.7 kg/cm², 75–81 psi)	490 kPa (5.0 kg/cm², 71 psi)
Stall speed	Check with car on level ground		2,150–2,450 rpm	——
Clutch	Clutch initial clearance	1st	0.65–0.85 (0.026–0.034)	——
		2nd, 3rd	0.5–0.7 (0.020–0.028)	——
		4th	0.4–0.6 (0.016–0.024)	——
	Clutch return spring free length		31.0 (1.22)	29.0 (1.14)
	Clutch disc thickness		1.88–2.0 (0.074–0.079)	Until grooves worn out
	Clutch plate thickness		1.95–2.05 (0.077–0.079)	Discoloration
	Clutch end plate thickness	Mark 1	2.05–2.10 (0.081–0.083)	↑
		Mark 2	2.15–2.20 (0.085–0.087)	
		Mark 3	2.25–2.30 (0.089–0.091)	
		Mark 4	2.35–2.40 (0.093–0.094)	
		Mark 5	2.45–2.50 (0.096–0.098)	
		Mark 6	2.55–2.60 (0.100–0.102)	
		Mark 7	2.65–2.70 (0.104–0.106)	
		Mark 8	2.75–2.80 (0.108–0.110)	
		Mark 9	2.85–2.90 (0.112–0.114)	
		Mark 10	2.95–3.00 (0.116–0.118)	Discoloration
Transmission	Diameter of needle bearing contact area on main and stator shaft		22.980–22.993 (0.9047–0.9052)	Wear or damage
	Diameter of needle bearing contact area on mainshaft 2nd gear		35.975–35.991 (1.4163–1.4169)	↑
	Diameter of needle bearing contact area on mainshaft 4th gear collar		31.975–31.991 (1.2588–1.2594)	
	Diameter of needle bearing contact area on mainshaft 1st gear collar		30.975–30.991 (1.2195–1.2201)	
	Diameter of needle bearing contact area on countershaft (R side)		38.505–38.515 (1.5159–1.5163)	
	Diameter of needle bearing contact area on countershaft 3rd gear		43.975–43.991 (1.7313–1.7319)	
	Diameter of needle bearing contact area on countershaft 4th gear		31.975–31.991 (1.2589–1.2595)	
	Diameter of needle bearing contact area on countershaft reverse gear collar		31.975–31.991 (1.2589–1.2595)	
	Diameter of needle bearing contact area on countershaft 1st gear collar		31.975–31.991 (1.2589–1.2595)	
	Diameter of needle bearing contact area on reverse idle gear		13.990–14.000 (0.5508–0.5512)	
	Reverse idler shaft holder I.D.		14.416–14.434 (0.5676–0.5683)	
	Mainshaft 2nd gear I.D.		42.000–42.016 (1.6141–1.6148)	
	Mainshaft 1st gear I.D.		36.000–36.016 (1.4173–1.4179)	
	Countershaft 4th gear I.D.		38.000–38.016 (1.4961–1.4966)	
	Countershaft 3rd gear I.D.		49.000–49.016 (1.9291–1.9298)	
	Countershaft 1st gear I.D.		39.000–39.016 (1.5354–1.5361)	
	Countershaft reverse gear I.D.		39.000–39.016 (1.5354–1.5361)	↓
	Reverse idle gear I.D.		18.007–18.020 (0.7086–0.7094)	Wear or damage
	Mainshaft 4th gear end play		0.10–0.22 (0.004–0.009)	——
	Mainshaft 2nd gear end play		0.07–0.12 (0.003–0.005)	Adjustable
	Mainshaft 1st gear end play		0.08–0.24 (0.003–0.009)	——
	Countershaft 3rd gear end play		0.07–0.17 (0.003–0.007)	——
	Countershaft 2nd gear end play		0.07–0.12 (0.003–0.006)	Adjustable
	Reverse idler gear end play		0.05–0.18 (0.002–0.007)	——
	Countershaft reverse gear end play		0.10–0.25 (0.004–0.010)	——
	Reverse gear hub O.D.		51.87–51.90 (2.0421–2.0433)	Wear or damage

(cont'd)

9. Automatic Transmission (cont'd)

	MEASUREMENT		STANDARD (NEW)	SERVICE LIMIT
Transmission (cont'd)	Thrust washer thickness			
	Mainshaft 2nd gear	A	3.97–4.00 (0.156–0.157)	—
		B	4.02–4.05 (0.158–0.159)	—
		C	4.07–4.10 (0.160–0.161)	—
		D	4.12–4.15 (0.162–0.163)	—
		E	4.17–4.20 (0.164–0.165)	—
		F	4.22–4.25 (0.166–0.167)	—
		G	4.27–4.30 (0.168–0.169)	—
		H	4.32–4.35 (0.170–0.171)	—
		I	4.37–4.40 (0.172–0.173)	—
	Mainshaft bearing contact area (L side)		3.75–3.85 (0.148–0.152)	Wear or damage
	Mainshaft 1st gear		2.43–2.50 (0.096–0.098)	Wear or damage
	"L" collar frange thickness		4.35–4.50 (1.1713–1.1772)	
	Countershaft 4th gear collar thickness	A	47.42–47.45 (1.8669–1.8681)	—
		B	47.47–47.50 (1.8689–1.8701)	—
		C	47.52–47.55 (1.8709–1.8720)	—
		D	47.57–47.60 (1.8728–1.8740)	—
		E	47.62–47.65 (1.8748–1.8760)	—
		F	47.67–47.70 (1.8768–1.8779)	—
		G	47.72–47.75 (1.8787–1.8799)	—
		H	47.77–47.80 (1.8807–1.8819)	—
		I	47.82–47.85 (1.8827–1.8839)	—
		J	47.87–47.90 (1.8846–1.8858)	—
	Thrust washer thickness (mainshaft 1st gear R side)		1.45–1.50 (0.057–0.059)	1.4 (0.055)
	Mainshaft 1st gear collar length		24.50–24.55 (0.4646–0.9665)	—
	Mainshaft 1st gear collar flange thickness		2.5–2.6 (0.098–0.102)	Wear or damage
	Countershaft reverse gear collar length		12.0–12.1 (0.472–0.476)	—
	Countershaft reverse gear collar flange thickness		2.4–2.6 (0.094–0.102)	Wear or damage
	Countershaft 1st gear collar length		12.0–12.1 (0.472–0.476)	—
	Countershaft 1st gear collar flange thickness		2.4–2.6 (0.095–0.102)	Wear or damage
	Diameter of countershaft one-way clutch contact area		83.339–83.365 (3.2811–3.2821)	Wear or damage
	Diameter of parking gear one-way clutch contact area		66.685–66.698 (2.6254–2.6259)	Wear or damage
	Mainshaft feed pipe O.D.		8.97–8.98 (0.3531–0.3535)	8.95 (0.3524)
	Countershaft feed pipe O.D.		7.97–7.98 (0.3138–0.3142)	7.95 (0.31)
	Mainshaft sealing ring 32 mm Thickness		1.980–1.995 (0.0780–0.0785)	1.8 (0.071)
	Mainshaft bushing I.D.		6.018–6.030 (0.2369–0.2374)	6.045 (0.238)
	Mainshaft bushing I.D.		9.000–9.015 (0.3543–0.3549)	9.03 (0.356)
	Countershaft bushing I.D.		8.000–8.015 (0.3150–0.3156)	8.03 (0.316)
	Mainshaft sealing ring groove width		2.025–2.060 (0.0797–0.0811)	2.08 (0.082)
	Selector hub O.D.		51.87–51.90	Wear or damage
Regulator valve body	Sealing ring contact area diameter		35.000–35.025 (1.3780–1.3789)	35.05 (1.38)
Shifting device and parking brake control	Reverse shift fork thickness		5.9–6.0 (0.232–0.236)	5.4 (0.21)
	Parking brake ratchet pawl		—	Wear or other defect
	Parking gear		—	Wear or other defect
	Throttle cam stopper		18.5–18.6 (0.728–0.732)	—
Servo body	Shift fork shaft bore I.D.	A	14.000–14.005 (0.5512–0.5514)	—
		B	14.006–14.010 (0.5514–0.5516)	—
		C	14.011–14.015 (0.5516–0.5518)	—
	Shift fork shaft valve bore I.D.		37.000–37.039 (1.4567–1.4582)	37.045 (1.4585)
Valve body	Oil pump gear side clearance		0.03–0.05 (0.0012–0.0020)	0.07 (0.003)
	Oil pump gear-to-body clearance		Drive: 0.210–0.265 (0.0083–0.0104)	—
			Driven: 0.070–0.125 (0.003–0.005)	—
	Stator camshaft needle bearing contact I.D. (Torque converter side)		27.000–27.021 (1.0630–1.0638)	Wear or damage
	Stator camshaft needle bearing contact I.D. (Oil pump side)		29.000–29.013 (1.1417–1.1422)	—
	Oil pump driven gear I.D.		14.016–14.034 (0.5518–0.5525)	Wear or damage
	Oil pump shaft O.D.		13.980–13.990 (0.5504–0.5508)	Wear or damage

Unit: mm (in.)

9. Automatic Transmission (cont'd)

	MEASUREMENT	STANDARD (NEW)	SERVICE LIMIT
Ring gear	Backlash	0.085–0.142 (0.0033–0.0056)	0.2 (0.0079)
Differential carrier	Pinion shaft bore diameter	18.000–18.018 (0.7087–0.7094)	——
	Carrier-to-pinion shaft clearance	0.016–0.052 (0.0006–0.0020)	0.1 (0.004)
	Driveshaft bore diameter	30.000–30.021 (1.1811–1.1819)	——
	Carrier-to-driveshaft clearance	0.025–0.066 (0.0010–0.0026)	0.12 (0.005)
Differential pinion gear	Backlash	0.08–0.15 (0.003–0.006)	Selection with 8 types of washers
	Pinion gear bore diameter	18.043–18.061 (0.7104–0.7111)	——
	Pinion gear-to-pinion shaft clearance	0.057–0.095 (0.0022–0.0037)	0.15 (0.006)
Differential taper roller bearing	Preload N•m (kg-m, lb-ft) New	2.7–3.9 (0.28–0.4, 2.0–2.9)	Selection with 17 types washers
	Reused	2.5–3.6 (0.25–0.37, 1.8–2.7)	Selection with 17 types washers

10. Driveshaft

	MEASUREMENT	STANDARD (NEW)	SERVICE LIMIT
Driveshaft	Right boot As installed	533–537.5 (21.0–21.2)	——
	Left boot As installed	533–537.5 (21.0–21.2)	——

11. Power Steering

	MEASUREMENT	STANDARD (NEW)	SERVICE LIMIT
Steering wheel	Play	10 (0.39) Max.	——
	Pinion starting torque N•m (kg-m, ft-lb)	1.2 (0.12, 0.86)	
Power steering	Pump pressure with valve closed (Oil temp./speed: 40°C (104°F) min/idle. Do not run for more than 5 seconds) kPa (kg/cm², psi)	7845–8826 (80–90, 1138–1280)	
	Fluid capacity Reservoir	0.5 ℓ (0.53 U.S. qt., 0.44 Imp. qt.)	
	At change	approx 1.7 ℓ (1.8 U.S. qt., 1.5 Imp. qt.)	
Power steering belt	Deflection midway between pulleys/load	19–24 (0.75–0.94)/98N (10 kg/22 lb) for used belt 13–16 (0.51–0.63)/98N (10 kg/22 lb) after replacement of belt	

12. Suspension

	MEASUREMENT	STANDARD (NEW)	SERVICE LIMIT
Wheel alignment		Front / Rear	
	Camber	0°00′ ± 1° / 0°00′ ± 1°	
	Caster	1°40′ ± 1°	
	Toe-in	0 ± 3 / 0 ± 2 (0 ± 0.12) / (0 ± 0.08)	
Wheel	Rim runout Aluminum Axial	0–0.7 (0–0.028)	——
	Radial	0–0.7 (0–0.028)	——
Wheel bearing	End play Front	0	0.05
	Rear	0	0.05

(cont'd)

Standard and Service Limits

Unit: mm (in.)

13. Brake

	MEASUREMENT		STANDARD (NEW)	SERVICE LIMIT
Parking brake lever	Play in stroke 200N (20 kg, 44 lbs)		To be locked when pulled 7–11 notches	
Foot brake pedal	Pedal height Free play		170.6 (6.7) from floor 1–5 (0.04–0.20)	—— 5 (0.20)
Master cylinder	Piston-to-push rod clearance		0–0.4 (0–0.016)	——
Disc brake	Disc thickness	Front	21.0 (0.83)	19.0 (0.75)
		Rear	10.0 (0.39)	8.0 (0.31)
	Disc runout	Front/Rear	——	0.1 (0.004)/0.1 (0.004)
	Disc parallelism		——	0.015 (0.0006)
	Pad thickness	Front	11.5 (0.45)	3.0 (0.12)
		Rear	10.0 (0.39)	1.6 (0.06)
Brake booster	Characteristics	Vacuum (mmHg)	Pedal Pressure Kg (lb.)	Line Pressure kPa (Kg/cm², psi)
		0	20 (44)	774 (7.9, 112)
		300	20 (44)	6135 (62.6, 890)
		500	20 (44)	8252 (84.2, 1198)

16. Electrical

	MEASUREMENT	STANDARD (NEW)	
Ignition coil	Rated voltage	12 Volts	
	Primary winding resistance	0.315–0.385 ohms	
	Secondary winding resistance	9,040–13,560 ohms	
Ignition wire	Resistance	25,000 ohms max.	
Spark plug	Type	See section 16	
	Gap	1.0–1.1 (0.039–0.043)	
Ignition timing	At idling	15° ± 2°BTDC	
Battery	Lighting capacity (20-hour ratio) Starting capacity (5-second ratio)	60 Ampere Houres (KE, KQ only), 65 Ampere Houres (Others) 8.4 V minimum at 300 Ampere draw	
Alternator	Output	13.5 V/70 A	
	Coil resistance (rotor) Slip ring O.D. Brush length Brush spring tension	2.8–3.0 ohms 14.4 (0.57) 10.5 (0.41) 300–360 g (10.6–12.7 oz)	—— 14.0 (0.55) 5.5 (0.22) ——
Alternator belt	Deflection midway between pulleys/load	18–22 (0.71–0.87)/98 N (10 kg, 22 lb) for used belt 13–16 (0.51–0.63)/98 N (10 kg, 22 lb) after replacement of belt	
Starting motor		1.6 KW (ND)	
	MEASUREMENT	STANDARD (NEW)	SERVICE LIMIT
	Mica depth	0.5–0.8 (0.015–0.031)	0.2 (0.008)
	Commutator runout	0–0.05 (0–0.002)	0.4 (0.016)
	Commutator O.D.	29.9–30.0 (1.177–1.181)	29.0 (1.14)
	Brush length	15.0–15.5 (0.59–0.61)	10.0 (0.39)
	Spring pressure (new)	17–24 N (1.7–2.4 kg, 3.7–5.3 lb.)	——

Design Specifications

	ITEMS	METRIC	ENGLISH	NOTES
DIMENSIONS	*Overall Length*	4,755 mm	187.2 in.	
		4,780 mm	188.2 in.	with bumper guard
	Overall Width	1,745 mm	68.7 in.	
	Overall Height	1,370 mm	53.9 in.	
	Wheelbase	2,705 mm	106.5 in.	
	Track F/R	1,500/1,500 mm	59.1/59.1 in.	
	Ground Clearance	150 mm	5.9 in.	
	Seating Capacity	Five		
WEIGHTS	*Engine weight*	175 kg	386 lb.	
	Curb Weight with Catalytic converter 5M/T	1,395 kg	3,075 lb.	
	Curb Weight with Catalytic converter 4A/T	1,415 kg	3,120 lb.	
	Curb Weight without Catalytic Converter 5M/T	1,410 kg	3,108 lb.	
	Curb Weight without Catalytic Converter 4A/T	1,430 kg	3,152 lb.	
	Weight Distribution (Front/Rear) with Catalytic Converter 5M/T	880 kg/515 kg	1,940 lb./1,135 lb.	
	Weight Distribution (Front/Rear) with Catalytic Converter 4A/T	900 kg/515 kg	1,984 lb./1,135 lb.	
	Weight Distribution (Front/Rear) without Catalytic Converter 5M/T	895 kg/515 kg	1,973 lb./1,135 lb.	
	Weight Distribution (Front/Rear) without Catalytic Converter 4A/T	915 kg/515 kg	2,017 lb./1,135 lb.	
	Max. Permissible Weight	1,920 kg	4,233 lb.	
ENGINE	Type	Water cooled, 4-cycles O.H.C., gasoline engine		
	Cylinder Arrangement	V6-Cylinder, transverse		
	Bore and Stroke	87.0 X 75.0 mm	3.43 X 2.95 in.	
	Displacement	2,675 cm³ (cc)	163 cu. in.	
	Compression Ratio with catalytic converter	9.0:1		
	Compression Ratio without catalytic converter	9.4:1		
	Valve Train	*Belt driven, single overhead camshaft*		
	Lubrication System	Trochoid pump		
	Fuel Required with catalytic converter	Unleaded gasoline with 91 research octane number or higher.		
	Fuel Required without catalytic converter	Leaded gasoline with 97 research octane number or higher.		
STARTER	Type ND	Gear reduction		
	Normal output	1.6 KW		
	Nominal voltage	12 V		
	Hour rating	30 seconds		
	Direction of rotation	Counterclockwise as viewed from gear end		
	Weight ND	4.6 kg	10.1 lb.	
TRANSMISSION	Clutch M/T	Single plate dry, diaphragm spring		
	Clutch A/T	Torque Converter		
	Transmission M/T	Synchronized 5 forward 1 reverse		
	Transmission A/T	Electronically controlled dual range 4 forward speed automatic; reverse		
	Primary Reduction	Direct 1:1		
	Gear Ratio	M/T	A/T	
	Gear Ratio 1st	2.923	2.647	
	Gear Ratio *2nd*	1.789	1.555 *1.448	*: KX only
	Gear Ratio 3rd	1.222	1.058	
	Gear Ratio 4th	0.909	0.794	
	Gear Ratio 5th	0.750	—	
	Gear Ratio Reverse	3.000	1.904	
	Final Reduction M/T	Single helical gear, 4.200		
	Final Reduction A/T	Single helical gear, 4.266		
	Clutch Lining Area	176 cm²	27.3 sq. in.	
STEERING SYSTEM	Type	Rack and Pinion		
	Overall Ratio	17.6:1		
	Turns, lock-to-lock	3.36		
	Steering Wheel Dia.	385 mm	15.2 in.	
	Power Steering Oil Capacity	1.7 ℓ	1.8 U.S. qt., 1.5 Imp. qt.	
	Power Steering Oil	Genuine Power Steering Fluid P/N 08208-99961		
SUSPENSION	Front	Independent Double wishbone, coil spring		
	Rear	Independent Double wishbone, coil spring		
	Shock Absorber, Front and Rear	Telescopic, hydraulic		
WHEEL ALIGNMENT	Camber Front and Rear	0°		
	Caster	1°40′		
	Toe-in Front	0 mm	0 in.	
	Toe-in Rear	0 mm	0 in.	

Design Specifications

	ITEMS	METRIC	ENGLISH	NOTES
BRAKE SYSTEM	Type, Front	Power assisted self-adjusting ventilated disc.		
	Type, Rear	Power assisted self-adjusting solid disc.		
	Pad and Lining Surface Area: Front/Rear	50.0/30.0 cm^2	7.8/4.6 sq. in.	
	Parking Brake Kind and Type	Mechanical expanding, rear two wheel brakes		
TIRES	Size	205/60 VR15		
AIR CONDITIONER	Cooling capacity	3,800 Kcal/h	15,077 BTU/h	
	— Conditions:			
	Compressor Revolution Speed	1,800 min^{-1} (rpm)		
	Outside air temperature	27.5°C	81.5°F	
	Outside air humidity	50%		
	Condenser air temperature	35°C	95°F	
	Condenser air velocity	4.5 m/sec.	14.8 ft/sec.	
	Blower capacity	420 m^3/h	14,836 cu. ft/h	
	Compressor (NIPPONDENSO) Type	Swash plate type		
	No. of cylinders	10		
	Capacity	172 cc/rev.	10.49 cu. in/rev.	
	Max. speed	8,000 min^{-1} (rpm)		
	Lubricant/capacity	80 cc	2.7 U.S. oz.	
	Condenser	Corrugated fin type		
	Evaporator	Corrugated fin type		
	Blower Type	Sirocco fan		
	Motor input	185 W (12 V)		
	Speed control	Infinitely variable		
	Max. capacity	420 m^3/h	14,836 cu. ft/h	
	Temp. Control	Air-mix type		
	Comp. Clutch Type	Dry, single plate, V-belt-1A		
	Power consumption	40 W max.	12 V	
	Refrigerant Type	R-12		
	Quantity	0.90 ± 0.05 kg	1.88 ± 0.11 lb.	
ELECTRICAL	Battery	12 V — 65 AH		
		12 V — 60 AH		KE, KQ
	Starter	12 V — 1.6 kW		
	Alternator	12 V — 70 amps		
	Fuses In the fuse box	7.5 A, 10 A, 15 A, 20 A		
	In the relay box	7.5A, 10 A, 15 A, 20 A, 30 A, 40 A, 70 A		
	Headlights High/Low	12 V — 60/55 W		
	Front Turn Signal Lights	12 V — 21 W		
	Rear Turn Signal Lights	12 V — 21 W		
	Side Turn Signal Lights	12 V — 21/5 W		
	Stop/Taillights	12 V — 5 W		Except KQ
	Front Marker Lights	12 V — 5 W		
	Rear Marker Lights	12 V — 5 W		
	Back-up Lights	12 V — 21 W		
	License Plate Lights	12 V — 8 W		
	Gauge Lights	12 V — 3.4/3.0/1.4 W		
	Indicator Lights	12 V — 1.2W, 1.4 W		
	Warning Lights	12 V — 1.4 W		
	Glove Box Lights	12 V — 3.4 W		
	Dome Light	12 V — 8 W		
	Trunk Light	12 V — 3.4 W		
	Door Courtesy Lights	12V — 3.4 W		
	Illumination and Pilot Lights	12 V — 1.4 W, 1.12 W, 1.1 W, 0.91 W, 0.7 W, 0.56 W, LED		
	Heater Illumination Lights	12 V — 1.4 W, 2 W		
	Map Lights	12 V — 5 W		
	Vanity Mirror Light	12 V — 2 W		

Body Specifications

Unit: mm (in.)

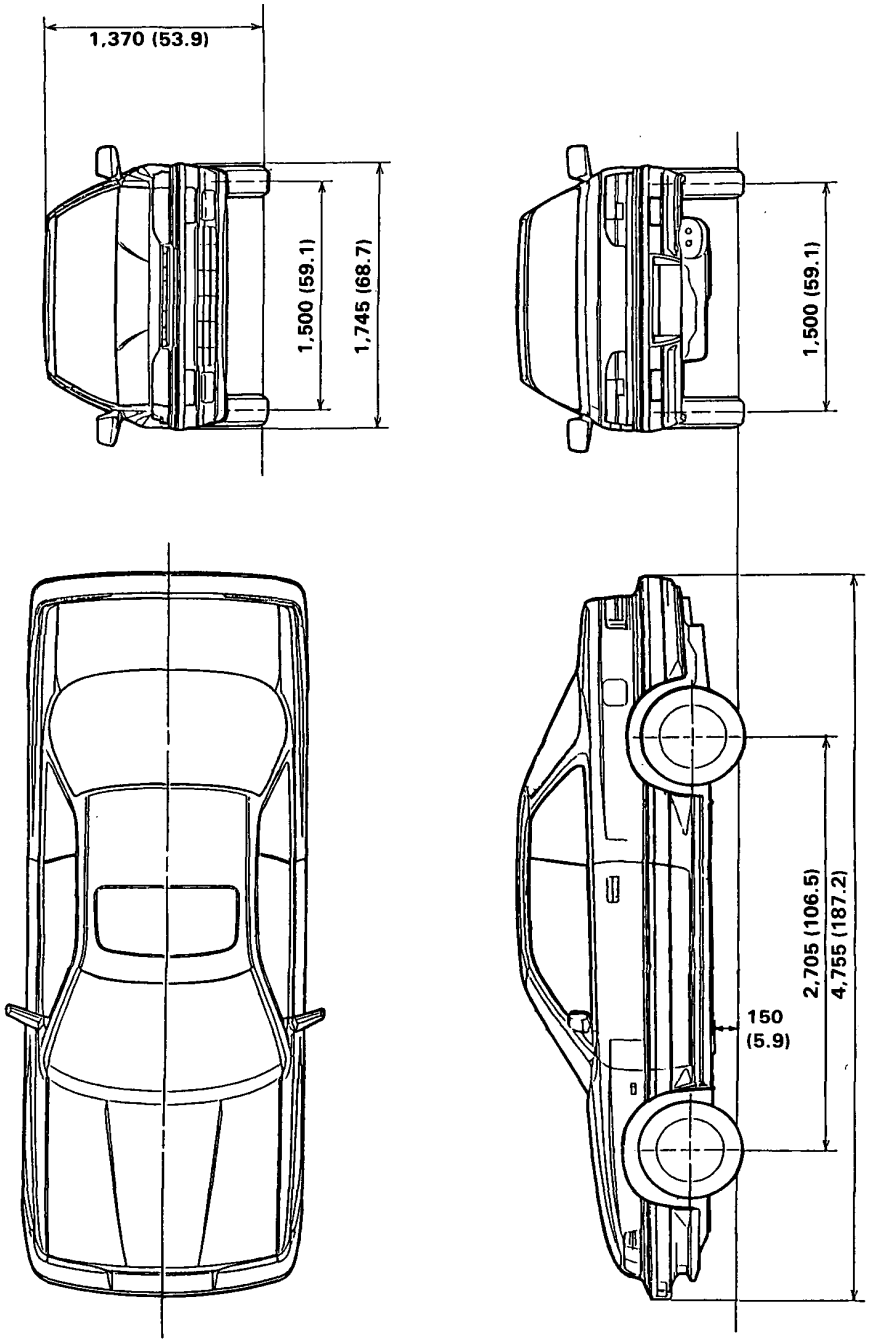

Lubrication Points

No.	LUBRICATION POINTS		LUBRICANT
1	Engine		API Service Grade: SE or SF SAE Viscosity: See chart below
2	Transmission	Manual Automatic	API Service Grade: SE or SF SAE30, 10W—30, 10W—40 or 20W—40 grade oil DEXRON® II Automatic transmission fluid
3 4	Brake reservoir Clutch reservoir		Brake fluid DOT 3
5	Steering gearbox (Power)		Steering grease P/N 08740—99969
6 7 8 9 10 11 12 13 14 15 16 17 18 19 20 21 22	Steering ball joint Steering Boot Shift lever pivot (Manual) Shift rod clevis bushings Select lever (Automatic) Pedal linkage Throttle cable end Brake master cylinder push rod Parking brake wire end Trunk hinges Door hinges upper and lower Door opening detents Fuel filler lid Engine hood hinges Engine hood latch Parking brake equalizer Clutch release fork		Multi-purpose Grease
23	Caliper	Piston seal Dust seal Caliper pin Piston	Silicone Grease
24	Power steering reservoir		Power steering fluid P/N 08208—99961

Recommended Engine oil
(SE or SF Grade Only)

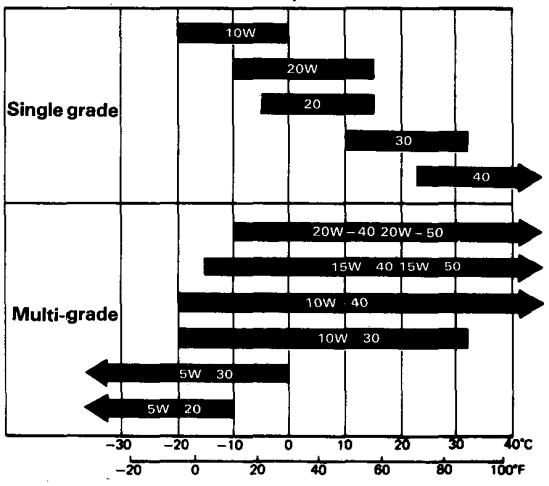

Engine oil viscosity for ambient temperature ranges.

Recommended Manual Transmission Oil

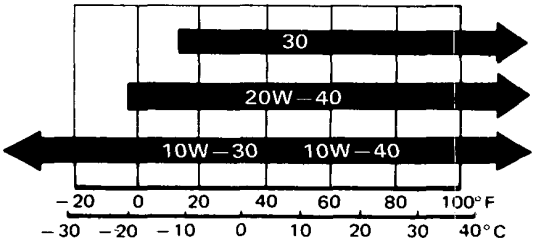

Transmission oil viscosity for ambient temperature ranges.

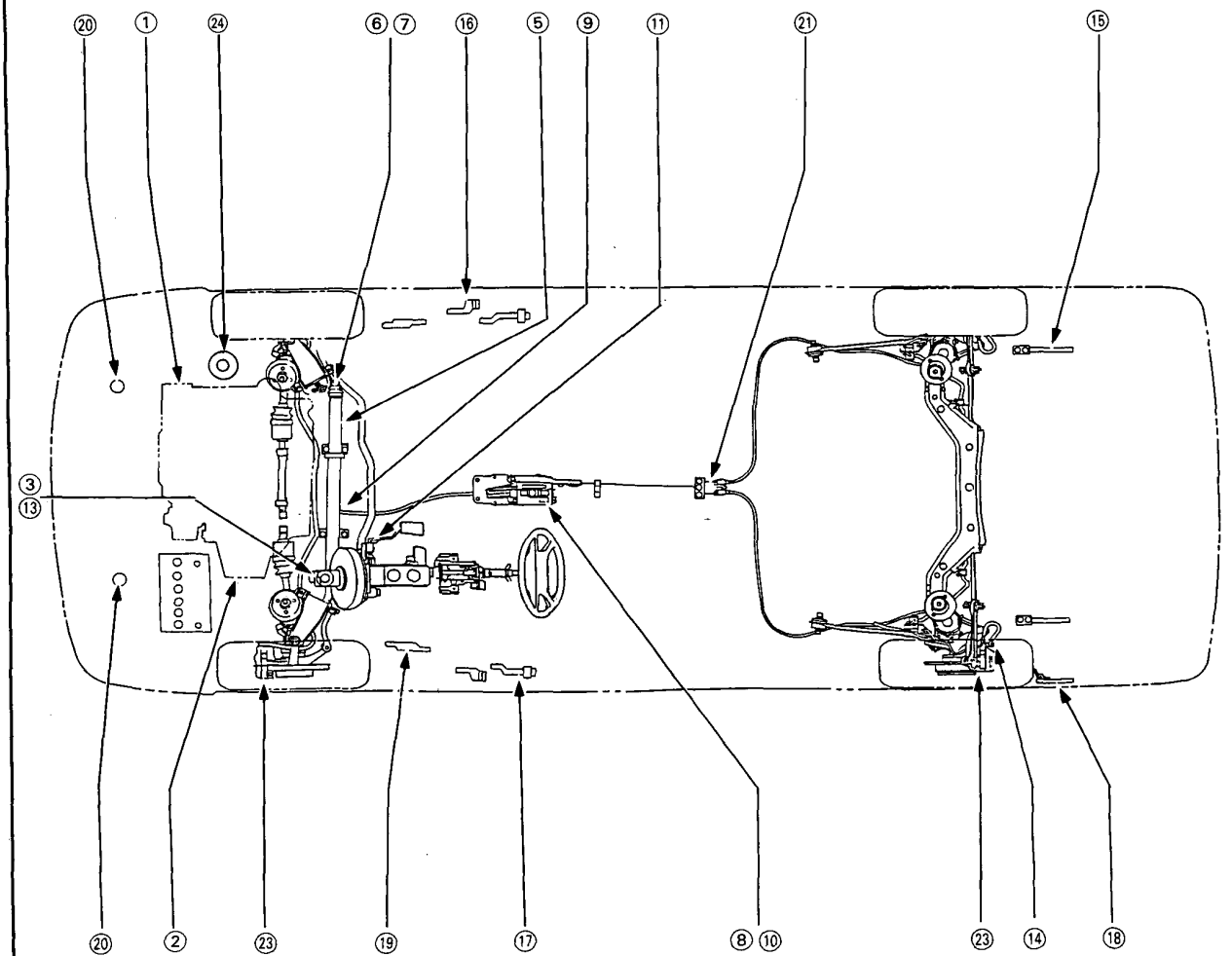
20
1
24
6 7
16
5
9
11
21
15
3
13
20
2
23
19
17
8 10
23
14
18

Maintenance Schedule

SERVICE AT THE INTERVAL OF LISTED KM (MILES) OR MONTHS, WHICHEVER OCCURS FIRST.							
	ITEMS	x 1,000 km	20	40	60	80	100
		x 1,000 miles	12	24	36	48	60
		months	12	24	36	48	60
	IDLE SPEED AND IDLE CO		I	I	I	I	I
	ALTERNATOR DRIVE BELT			I		I	
■	ENGINE OIL AND OIL FILTER		Replace every 10,000 km (6,000 miles) or 6 months				
■	TRANSMISSION OIL			R		R	
■	RADIATOR COOLANT					R*1	
	COOLING SYSTEM, HOSES AND CONNECTIONS			I		I	
	E.G.R. SYSTEM*4						I
	E.G.R. SYSTEM*2				I		I
	E.G.R. FILTER*2						R
	SECONDARY AIR SUPPLY SYSTEM*4						I
	AIR CLEANER ELEMENT			R		R	
	FUEL FILTER			R		R	
	TANK, FUEL LINE AND CONNECTIONS			I		I	
	EVAPORATIVE EMISSION CONTROL SYSTEM*3						I
	IGNITION TIMING AND CONTROL SYSTEM			I		I	
	SPARK PLUGS*2		R	R	R	R	R
	SPARK PLUGS*3			R		R	
	DISTRIBUTOR CAP AND ROTOR			I		I	
	IGNITION WIRING			I		I	
	CRANKCASE EMISSION CONTROL SYSTEM			I		I	
	BRAKE HOSES, LINES (Including ALB hoses and pipes)		I	I	I	I	I
	BRAKE FLUID (Including ALB fluid)			R		R	
	FRONT BRAKE DISCS AND CALIPERS		I	I	I	I	I
	FRONT BRAKE PADS		Inspect every 10,000 km (6,000 miles) or 6 months				
	REAR BRAKE, DISCS, CALIPERS AND PADS			I		I	
	PARKING BRAKE		I	I		I	
	EXHAUST PIPE AND MUFFLER		I	I	I	I	I
	SUSPENSION MOUNTING BOLTS		I	I	I	I	I
	FRONT WHEEL ALIGNMENT		I	I	I	I	I
	STEERING OPERATION, TIE ROD ENDS, STEERING GEAR BOX AND BOOTS		I	I		I	
	ALB HIGH PRESSURE HOSE					R	
	ALB OPERATION		I	I		I	
	POWER STEERING SYSTEM		I	I	I	I	I
	POWER STEERING PUMP BELT			I		I	
	CATALYTIC CONVERTER HEAT SHIELD (with catalytic converter)						I

R—Replace I—Inspect. After inspection, clean, adjust, repair or replace if necessary

■ REMARK: These service intervals assume routine checking and replenishment has been done, as needed, by the customer.

*1 Thereafter, replace every 2 years or 40,000 km (24,000 miles), whichever comes first.
*2 Only for cars using leaded gasoline
*3 Only for cars using unleaded gasoline
*4 Only for cars unleaded gasoline except KQ.

CAUTION: The following items must be serviced more frequently on cars normally used under severe driving conditions. Refer to the chart below for the appropriate maintenance intervals.

"Severe driving conditions" include:
- A: Repeated short distance driving
- B: Driving in dusty conditions
- C: Driving in severe, cold weather
- D: Driving in areas using road salt or other corrosive materials
- E: Driving on rough and/or muddy roads
- F: Towing a trailer

R—Replace
I —Inspect. After inspection, clean, adjust, repair or replace if necessary.

Condition	Maintenance item	Maintenance operation	Interval
A B • • • F	Engine oil and oil filter	R	Every 5,000 km (3,000 miles) or 3 months
• • • • • F	Transmission oil	R	Every 20,000 Km (12,000 miles) or 12 months
A B • D E F	Front brake discs and calipers	I	Every 10,000 km (6,000 miles) or 6 months
A B • D E F	Rear brake discs, calipers and pads	I	Every 20,000 km (12,000 miles) or 12 months
• B C • E •	Power steering system	I	Every 10,000 km (6,000 miles) or 6 months

Radiator Cap Testing

1. Remove the radiator cap, wet its seal with coolant, them install it on the pressure test equipment.
2. Apply pressure of 88—118 kPa (0.90—1.20 kg/cm², 13—17 psi).
3. Check for a drop in pressure.
4. If there is a drop in pressure, replace the cap.

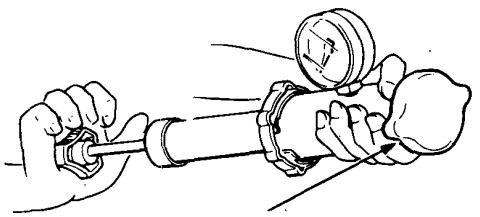

Coolant Level Inspection

1. Check whether the coolant level in the reservoir tank is between "MAX" and "MIN".

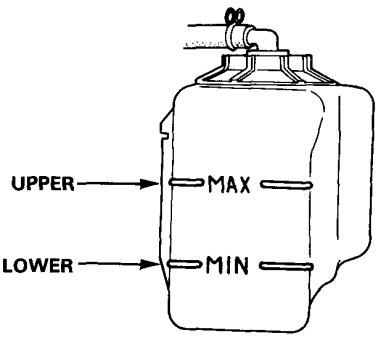

2. Supply the reservoir tank with coolant to "MAX", if the coolant level is lower than "MIN" or near to "MIN".

   NOTE:
   - Use only HONDA RECOMMENDED anti-freeze/coolant.
   - For best corrosion protection, the coolant concentration must be maintained year-round at 50% MINNMUM. Coolant concentrations less than 50% may not provide sufficient protection against corrosion or freezing.
   - Coolant concentrations greater than 60% will impair cooling efficiency and are not recommended.

   CAUTION:
   - **Do not mix different brand anti-freeze/coolants.**
   - **Do not use a additional rust inhibitors or anti-rust products; they may not be compatible with the recommended coolant.**

   Radiator Coolant Refill Capacity:
   M/T: 8.2 ℓ (8.7 US qt., 7.2 Imp. qt.)
   A/T: 8.0 ℓ (8.5 US qt., 7.0 Imp. qt.)
   (including the expansion tank capacity : 2.0 ℓ (2.1 US qt., 1.8 Imp. qt.))

3. See page 5-48 for refilling.

Engine Oil Level Inspection

1. Check engine oil with the engine off and the car parked on level ground.

2. Make certain that the oil level indicated on the dipstick is between the upper and lower marks.

3. If the level has dropped close to the lower mark, add oil until it reaches the upper mark.

   CAUTION: Insert the dipstick carefully to avoid bending it.

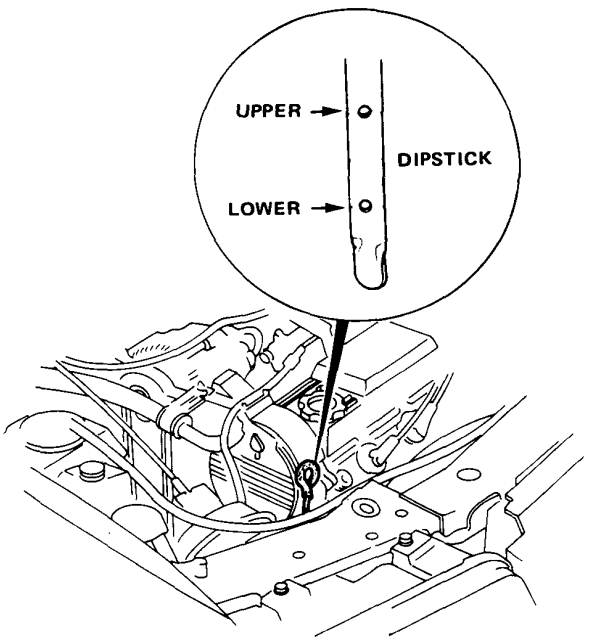

Engine Oil Replacement

1. Warm up the engine.

2. Drain the engine oil.

   NOTE: Remove the filler cap to speed draining.

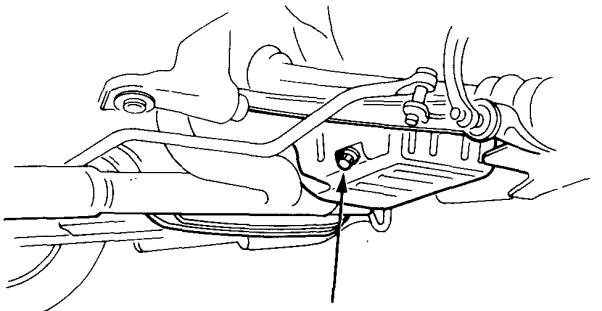

OIL PAN DRAIN PLUG
45 N·m (4.5 kg-m, 33 lb-ft)

3. Reinstall the drain plug with a new washer, and refill with the recommended oil.

Requirement	SE or SF Grade only
Capacity	4.5 ℓ (4.8 U.S. qt., 4.0 Imp. qt.) at change, including filter. 5.7 ℓ (6.0 U.S. qt., 5.0 Imp. qt.) after engine overhaul.
Change	Every 10,000 km (6,000 miles) or 6 months

NOTE: Oil filter should be replaced at each oil change.

Recommended Engine Oil (SE or SF Grade only)

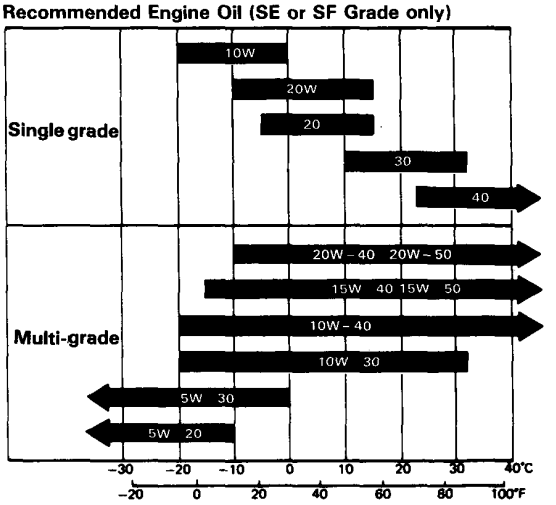

Expected Ambient Temperature before next oil change

Air Cleaner Element Inspection/ Replacement

1. Remove the four bolts and the air cleaner cover.

2. Remove the air cleaner element after extracting the spring.

3. Check the air cleaner element for fouling.

   NOTE: No cleaning is necessary for the air cleaner element, because its filter takes in oil (: viscous type).

   Replace: every two years

   - The air cleaner element should be replaced more frequently on cars normally used under severe driving conditions.

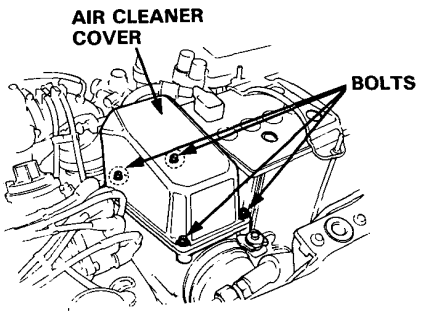

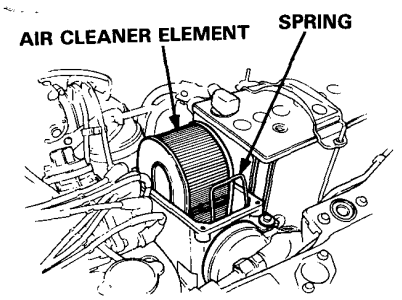

4. Install the air cleaner element in the reverse order of removal.

Compression Pressure Inspection

1. Before inspection, run the engine until it warms up (radiator fan comes on).

2. Disconnect the 2-P connector (Ignition coil primary lead) from the distributor.

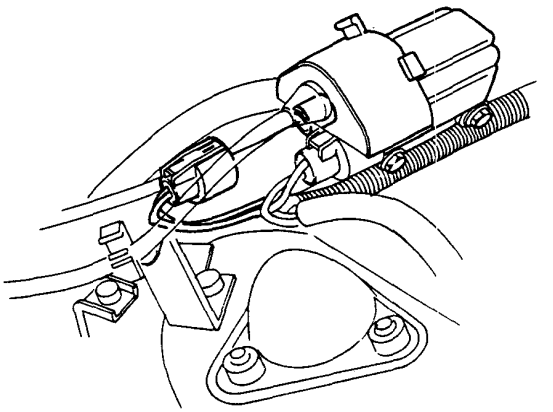

3. Disconnect spark plugs (6).

4. Fit the compression gauge adapter into a plug hole.

   - Measure compression pressure at each cylinder.

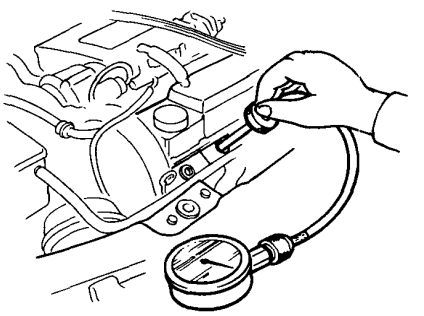

Compression pressure
Standard: 1,117 kPa (12.0 kg/cm², 171 psi) at 200 min⁻¹ (rpm)
Limit: 981 kPa (10.0 kg/cm², 142 psi) at 200 min⁻¹ (rpm)
Difference between cylinders: 169 kPa (2.0 kg/cm², 28 psi)

NOTE: Use a full charged battery.

5. If compression pressure is low, it is caused by wear or damage of piston rings or head gasket, and improper seated valves.

Spark Plug Inspection

1. Inspect the electrodes and ceramic insulator for:

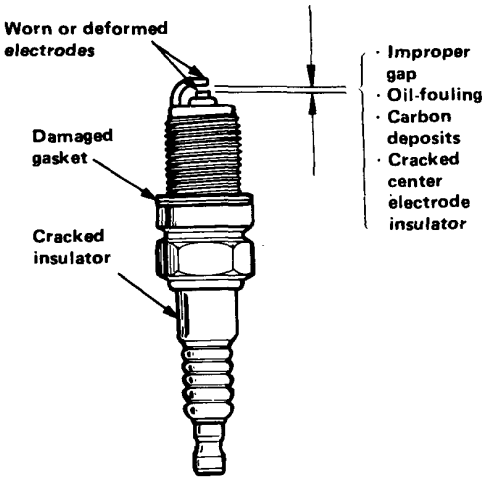

Burned or worn electrodes may be caused by:
- Lean fuel mixture
- Advanced ignition timing
- Loose spark plug
- Plug heat range too high
- Insufficient cooling

Fouled plug may be caused by:
- Rich fuel mixture
- Retarded ignition timing
- Oil in combustion chamber
- Incorrect spark plug gap
- Plug heat range too low
- Excessive idling/low speed running
- Clogged air cleaner element
- Deteriorated ignition coil or ignition wires

2. Replace the plug if the center electrode is rounded as shown below:

Spark Plug:
BCPR6E-11 (NGK), Q20PR-U11 (ND)
BCPR6EY-N11 (NGK)*2
BCPR7E-11 (NGK), Q22PR-U11 (ND)
BCPR7EY-N11 (NGK)*2
BCPR5E-11 (NGK)*1, Q16PR-U11 (ND)*1
BCPR5EY-N11 (NGK)*1
(or equivalent)

***1: KQ only**
***2: With catalytic converter**

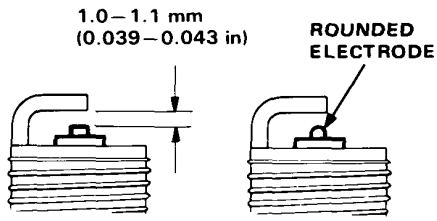

3. Adjust the gap with a suitable gapping tool.

Electrode Gap: 1.0–1.1 mm (0.039–0.043 in)

4. Screw the plugs into the cylinder head finger tight, then torque them to 22 N•m (2.2 kg-m, 16 lb-ft).

NOTE: Apply a small quantity of anti-seize compound to the plug threads before installing.

Alternator Belt Adjustment

1. Apply a force of 98 N (10 kg, 22 lb) and measure the deflection between the alternator pulley and the crankshaft pulley.

   Deflection: 18--22 mm (0.71–0.87 in.)

   NOTE: On a brand-new belt, the deflection should be 13–16 mm (0.51–0.63 in.) when first measured.

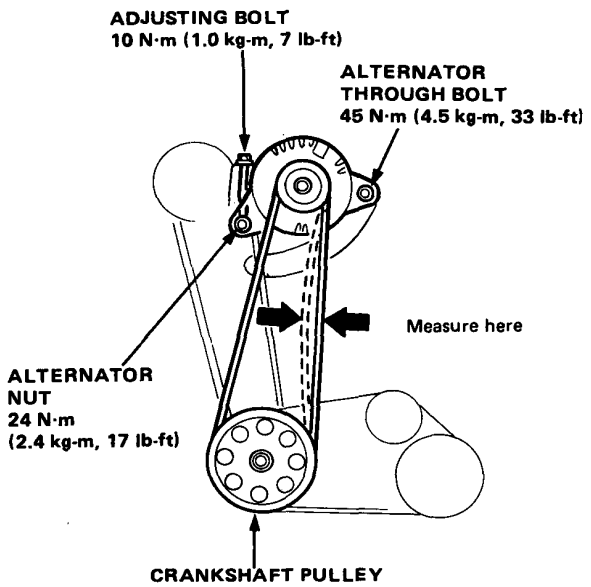

2. Loosen the alternator nut and through bolt.
3. Move the alternator by turning the adjusting bolt to obtain the proper belt tension, then retighten the bolt and nut.
4. Recheck the deflection of the belt.

P/S Pump Belt Adjustment

1. Apply a force of 98 N (10 kg, 22 lb) and measure the deflection, between the P/S pump pulley and the crankshaft pulley.

   Deflection: 19–24 mm (0.75–0.95 in.).

   NOTE: On a brand-new belt, the deflection should be 13–16 mm (0.51–0.63 in.) when first measured.

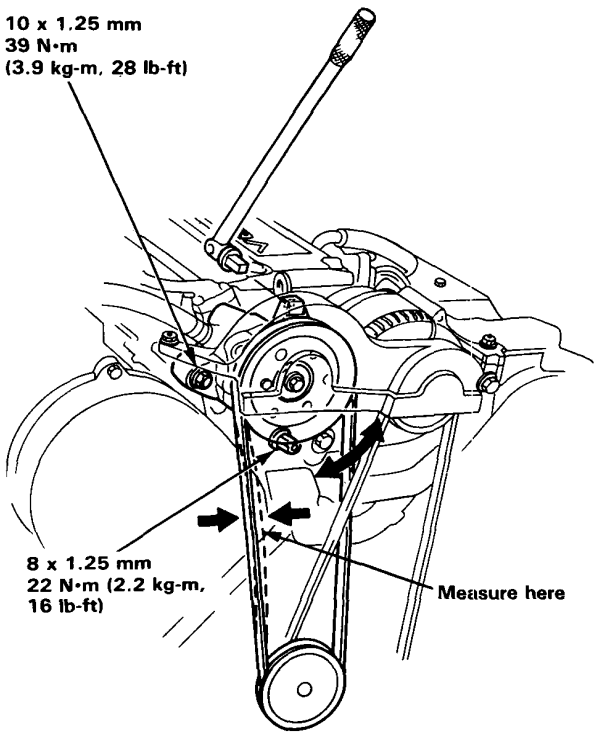

2. Remove the belt cover.
3. Loosen the pump adjusting nut, and pivot bolt.
4. Pry the pump away from the engine to get the proper tension, then retighten the adjusting nut, and pivot bolt.
5. Recheck the deflection of the belt.

A/C Compressor Belt Adjustment

1. Apply a force of 98 N (10 kg, 22 lb) and measure the deflection, between the A/C compressor adjusting pulley and the crankshaft pulley.

   Deflection: 9—11 mm (0.35—0.43 in.)

   NOTE: On a brand-new belt, the deflection should be 7—9 mm (0.28—0.35 in.) when first measured.

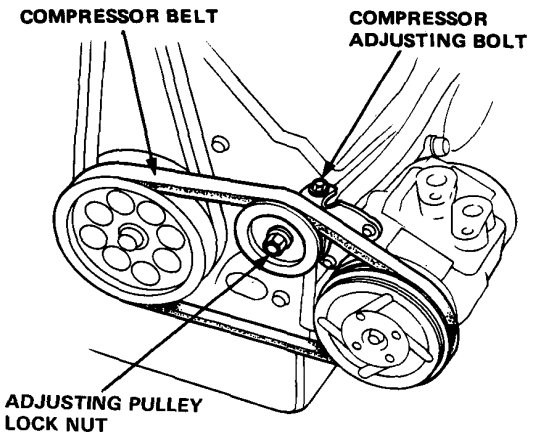

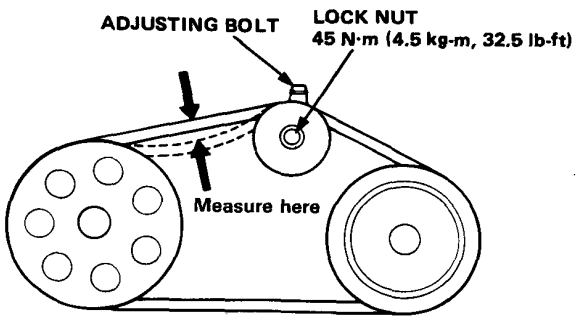

2. Loosen the adjusting pulley locknut.

3. Move the adjusting pulley by turning the adjusting bolt to obtain the proper belt tension, then retighten the bolt and nut.

4. Recheck the deflection of the belt.

Idle Speed Inspection/Adjustment

1. Start the engine and warm it up to normal operating temperature (the cooling fan comes on).

2. Connect a tachometer.

3. Set the steering in the straight forward condition, and check idling in no-load conditions in which the headlights, blower fan, rear defroster, cooling fan, and air conditioner are not operating.

   Idle speed should be:

   KG, KX

Manual	680 ± 50 rpm
Automatic	680 ± 50 rpm (in N or P)

   KB, KE, KF, KQ

Manual	720 ± 50 rpm
Automatic	680 ± 50 rpm (in D) and 720 ± 50 rpm (in N or P)

4. Check the Yellow LED display at the ECU under the passenger's seat.

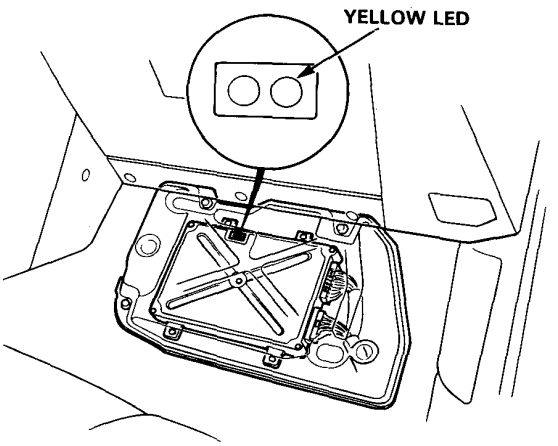

- If Yellow LED is off
  Do not adjust idle adjusting screw.
- If Yellow LED is blinking
  Adjust idle adjusting screw 1/4 turn clockwise.
- If Yellow LED is on
  Adjust idle adjusting screw 1/4 turn counter-clockwise.

(cont'd)

Idle Speed Inspection/Adjustment (cont'd)

NOTE: On a new engine (less than 310 miles or 500 km) the Yellow LED may light even though the idle adjusting screw is properly set. However, no adjustment should be made.

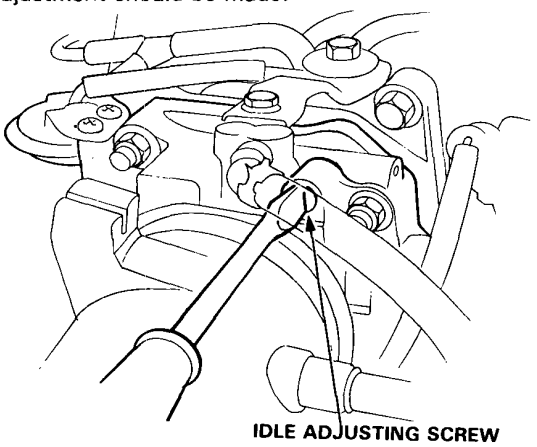

— Check that the Yellow LED goes off after approximately 30 seconds.
If it does not go off, rotate the idle adjusting screw by 1/4 turn in the same direction, and repeat the same operation until the Yellow LED goes off.

5. Check the idle speed in the following conditions.
   - With headlights (Hi) and rear window defogger ON.
   - While the steering wheel is turning.
   - With air conditioner compressor on.
   - If, applicable, with Automatic transmission model when shifted in gear (except [N] or [P]).

   Idle should remain stable at: 800 ± 50 rpm

Inspection

WARNING Do not smoke during this procedure. Keep any open flame away from your work area.

1. Start the engine and warm up to normal operating temperature (cooling fan comes on).
2. Connect tachometer.
3. Check idle speed and adjust the idle speed, if necessary (page 6-75).
4. Warm up and calibrate the CO meter according to the meter manufacturer's instructions.
5. Check idle CO with the headlights, heater blower, rear window defogger, cooling fan, and air conditioner off.

   CO meter should indicate:
   KG, KX, KQ Model: 0.1 % Maximum.
   KE, KB, KF Model: 1.0 ± 1.0 Maximum.

   - If unable to obtain this reading;
     On KG, KX, KQ models, see ECU troubleshooting (page 6-25).
     On KE, KB, KF Models, adjust by turning adjusting screw of the IMA sensor.

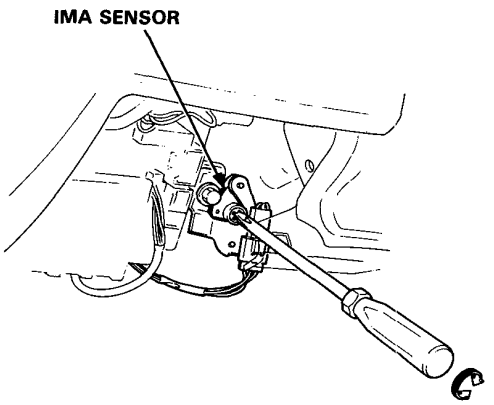

— If unable to obtain a CO reading of specified % by this procedure, check the engine tune-up condition.

Idle Speed Inspection/Adjustment (cont'd)

NOTE: On a new engine (less than 310 miles or 500 km) the Yellow LED may light even though the idle adjusting screw is properly set. However, no adjustment should be made.

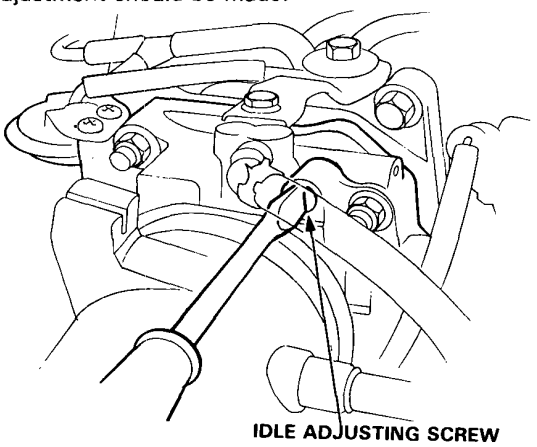

— Check that the Yellow LED goes off after approximately 30 seconds.
If it does not go off, rotate the idle adjusting screw by 1/4 turn in the same direction, and repeat the same operation until the Yellow LED goes off.

5. Check the idle speed in the following conditions.
   - With headlights (Hi) and rear window defogger ON.
   - While the steering wheel is turning.
   - With air conditioner compressor on.
   - If, applicable, with Automatic transmission model when shifted in gear (except [N] or [P]).

   Idle should remain stable at: 800 ± 50 rpm

Inspection

WARNING Do not smoke during this procedure. Keep any open flame away from your work area.

1. Start the engine and warm up to normal operating temperature (cooling fan comes on).
2. Connect tachometer.
3. Check idle speed and adjust the idle speed, if necessary (page 6-75).
4. Warm up and calibrate the CO meter according to the meter manufacturer's instructions.
5. Check idle CO with the headlights, heater blower, rear window defogger, cooling fan, and air conditioner off.

   CO meter should indicate:
   KG, KX, KQ Model: 0.1 % Maximum.
   KE, KB, KF Model: 1.0 ± 1.0 Maximum.

   - If unable to obtain this reading;
     On KG, KX, KQ models, see ECU troubleshooting (page 6-25).
     On KE, KB, KF Models, adjust by turning adjusting screw of the IMA sensor.

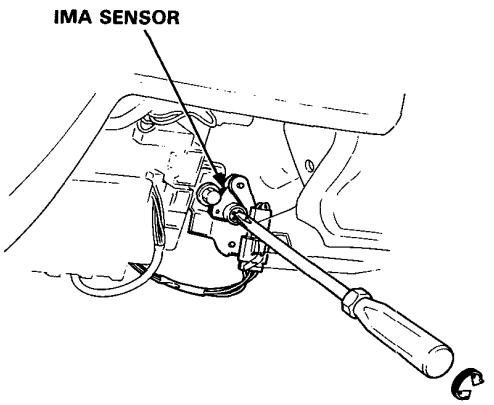

— If unable to obtain a CO reading of specified % by this procedure, check the engine tune-up condition.

Ignition Timing Inspection and Setting

1. Start the engine and allow it to warm up (cooling fan comes on).

2. Connect a timing light to the engine; while the engine idles, point the light toward the pointer on the timing belt cover.

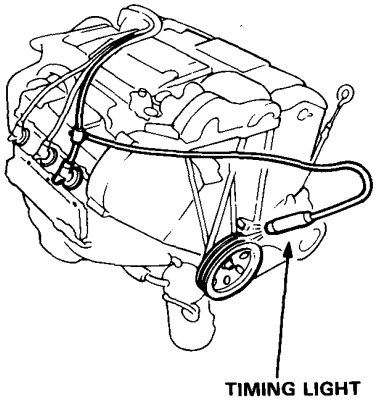

3. Inspection ignition timing at idle.

   Ignition Timing:
   15 ± 2° BTDC (RED)
   KF, KB, KE, KQ: at 720 ± 50 min⁻¹ (rpm) in neutral
   KG, KX: at 680 ± 50 min⁻¹ (rpm) in neutral

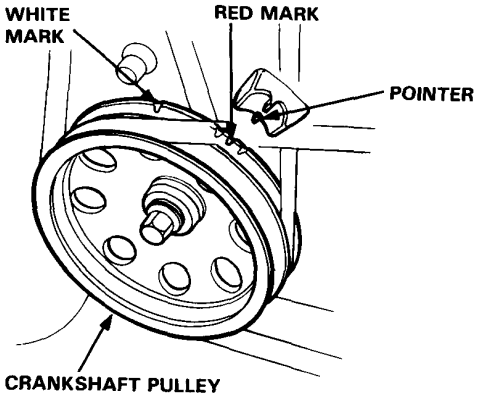

4. Adjust ignition timing, if necessary, by turning the adjusting screw on the ignition timing adjuster in the control box.

5. Remove the control box uppor and lower covers.

   NOTE: LHD shown, RHD similar.

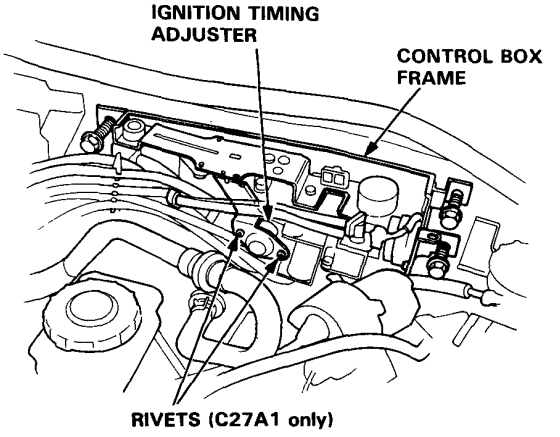

6. For C27A1 engine only, drill the 2 rivets off with a 3/16 in. drill bit, then separate the stay cover from the adjuster.

   CAUTION: Do not damage the adjuster when removing the rivets.

7. Adjust as necessary by turning the adjusting screw on the adjuster; turn the adjusting screw counterclockwise to retard the timing, or clockwise to advance the timing.

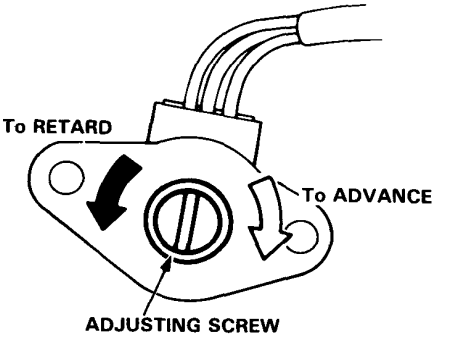

8. After adjusting, reinstall the stay cover to the ignition timing adjuster with new rivets, then reinstall the adjuster to the control box.

Timing Belt

Illustrated Index 5-12
Inspection 5-13
Tension Adjustment 5-13
Replacement 5-14
Positioning Timing Belt 5-17

Special Tool

Ref. No.	Tool Number	Description	Q'ty	Remarks
①	07925–6570000	Pulley Holder	1	Camshaft Pulley

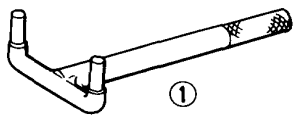

Timing Belt

Illustrated Index

NOTE:

- Refer to page 5-17, for positioning of the crank and pulley before installing the belt.
- Refer to page 5-6, for alternator belt adjustment.
- Refer to page 5-6, for power steering pump belt adjustment.
- Refer to page 5-7, for air conditioning compressor belt adjustment.
- Mark direction of rotation before removing.

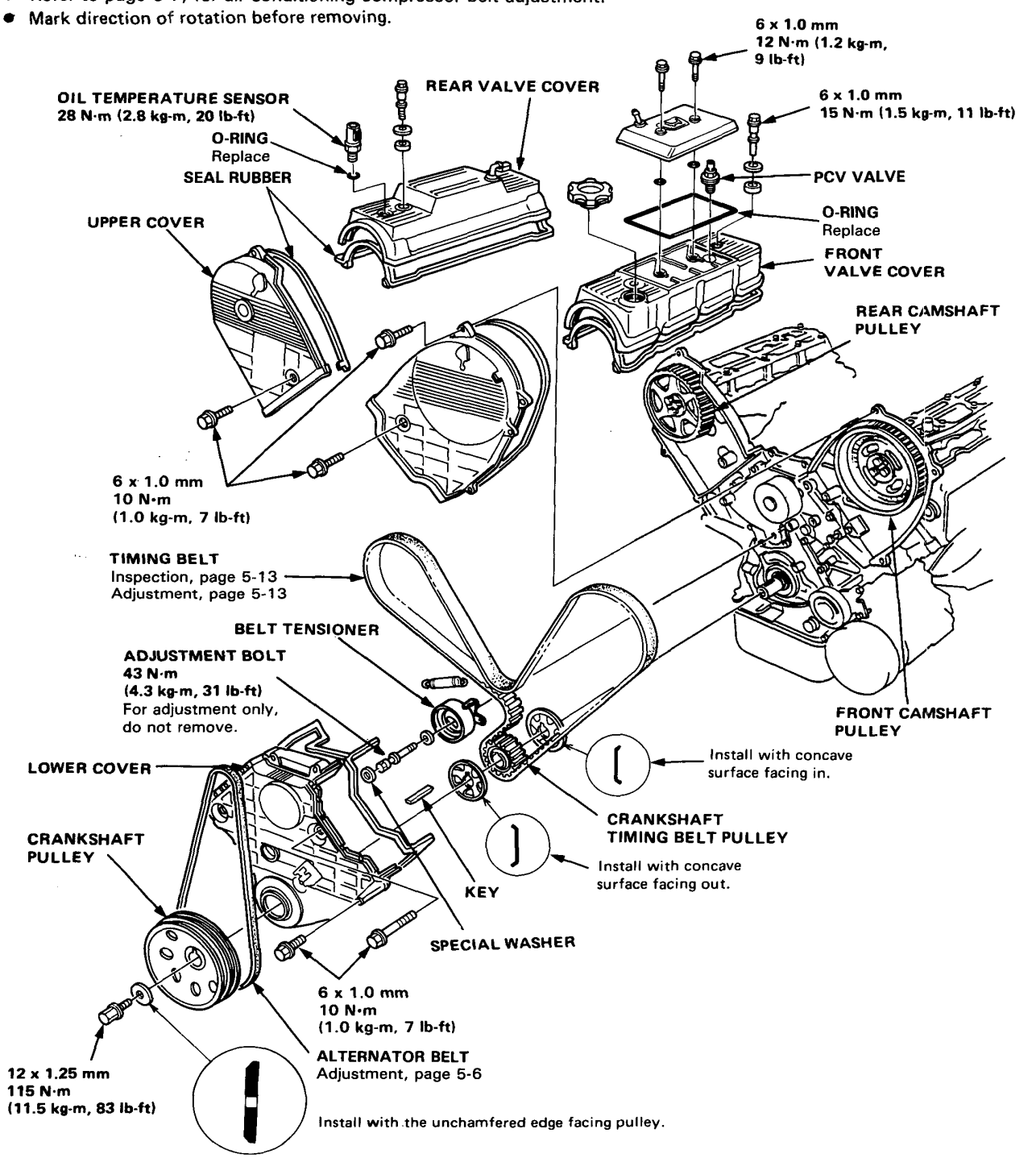

Inspection

CAUTION: The crankshaft should rotate clockwise when viewed from the pulley side.

NOTE:
- Replace belt if oil soaked.
- Quickly remove any oil or solvent that gets on the belt.

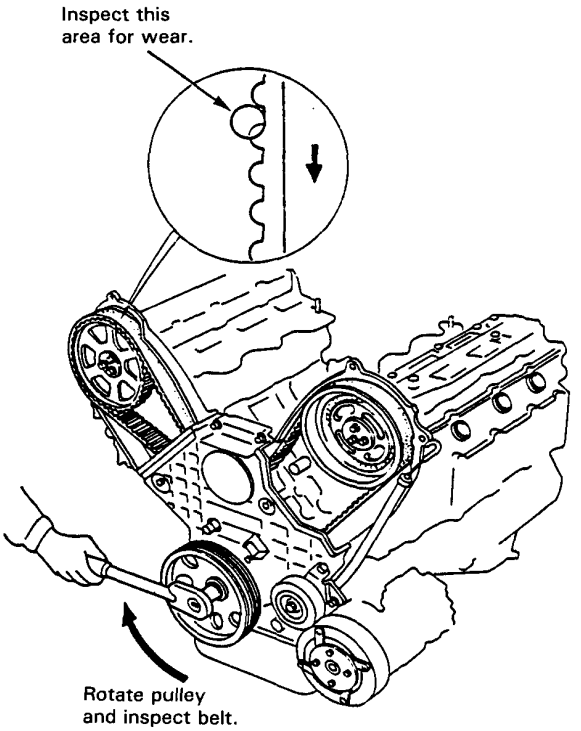

Tension Adjustment

CAUTION: Always adjust timing belt tension with the engine cold.

NOTE: Tensioner is spring-loaded to apply proper tension to the belt automatically after making the following adjustment:

- The crankshaft should rotate clockwise when viewed from the pulley side.

1. Set the No. 1 piston at TDC compression stroke.
2. Rotate the crankshaft clockwise 9-teeth on camshaft pulley (The blue mark on crankshaft pulley should match the pointer on lower cover).
3. Loosen the adjusting bolt to create tension on timing belt.
4. Tighten the adjusting bolt.

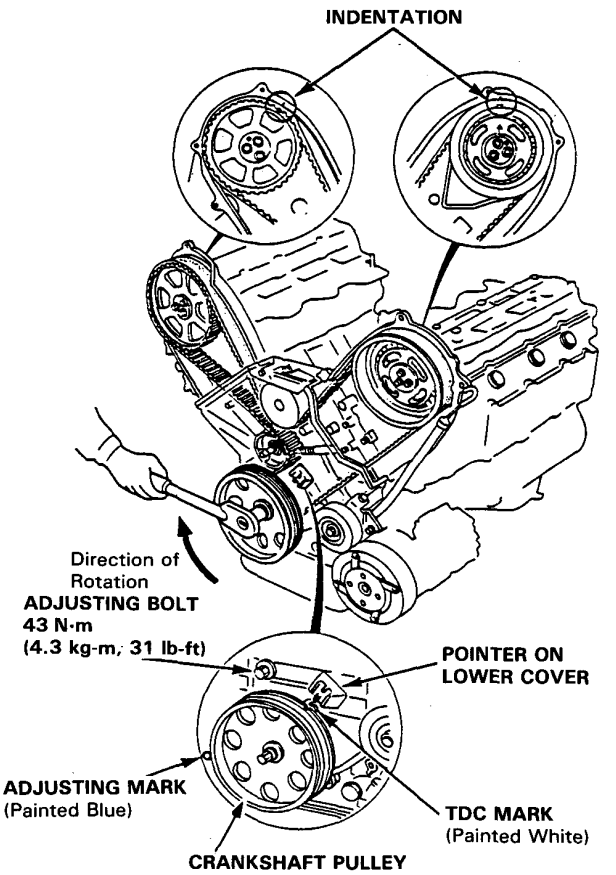

Replacement

1. Remove the pulley cover and harness cover from above the timing belt upper cover.

2. Remove the engine sub-harness clamp.

3. Remove engine support bolts, loosen the side mount rubber, and raise the side mount bracket.

   CAUTION: Use a chain hoist to support the engine.

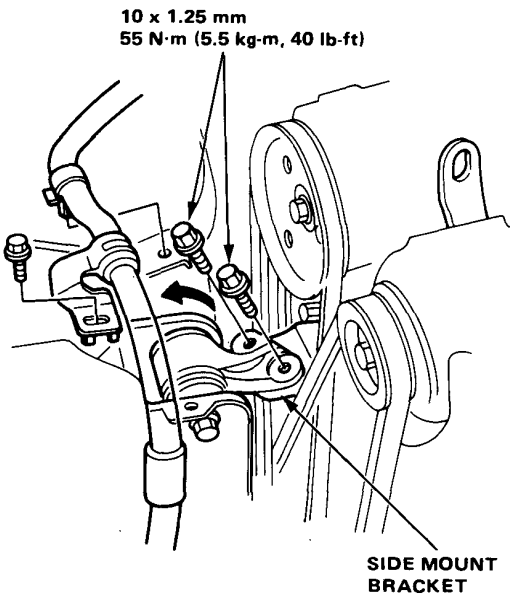

4. Remove lower splash guard (page 5-32).

5. Loosen the air conditioning idle pulley adjusting bolt, and remove the air conditioning compressor belt.

6. Remove the alternator adjusting bolt and the mounting bolt, and then remove the alternator and the belt.

7. Remove the power steering pump adjusting bolt and the mounting bolt, and then remove the power steering pump and the belt.

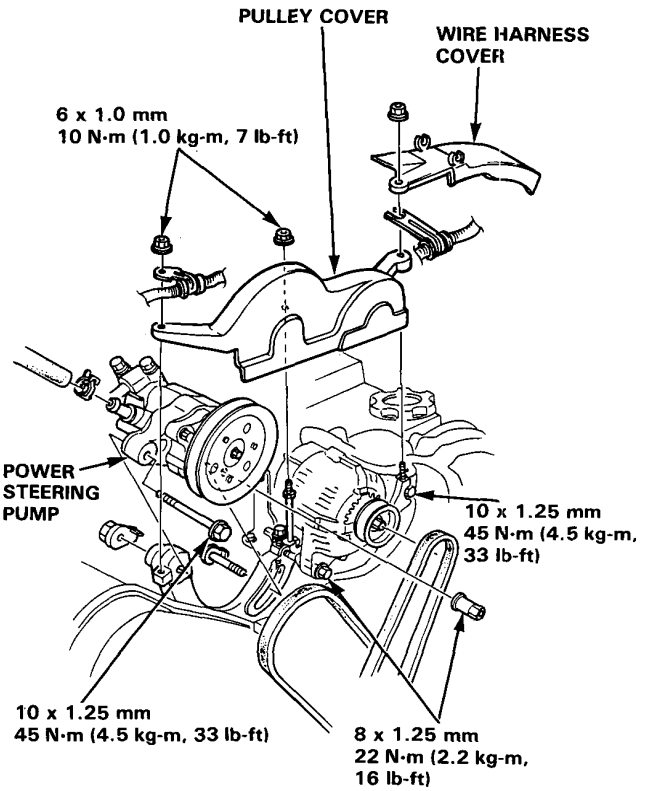

8. After installation, adjust the tension of each belt.

   See page 5-6 for alternator belt tension adjustment.

   See page 5-6 for power steering pump belt tension adjustment.

9. Remove the front and rear upper covers.

10. Remove the special bolt then remove the crankshaft pulley.

11. *Remove* the lower cover.

12. Loosen the adjust bolt then remove the timing belt.

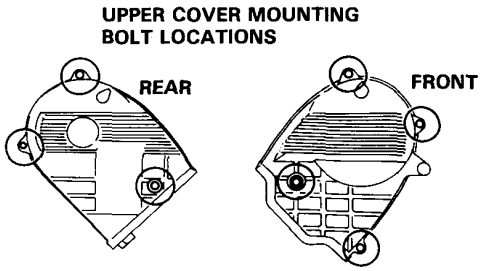

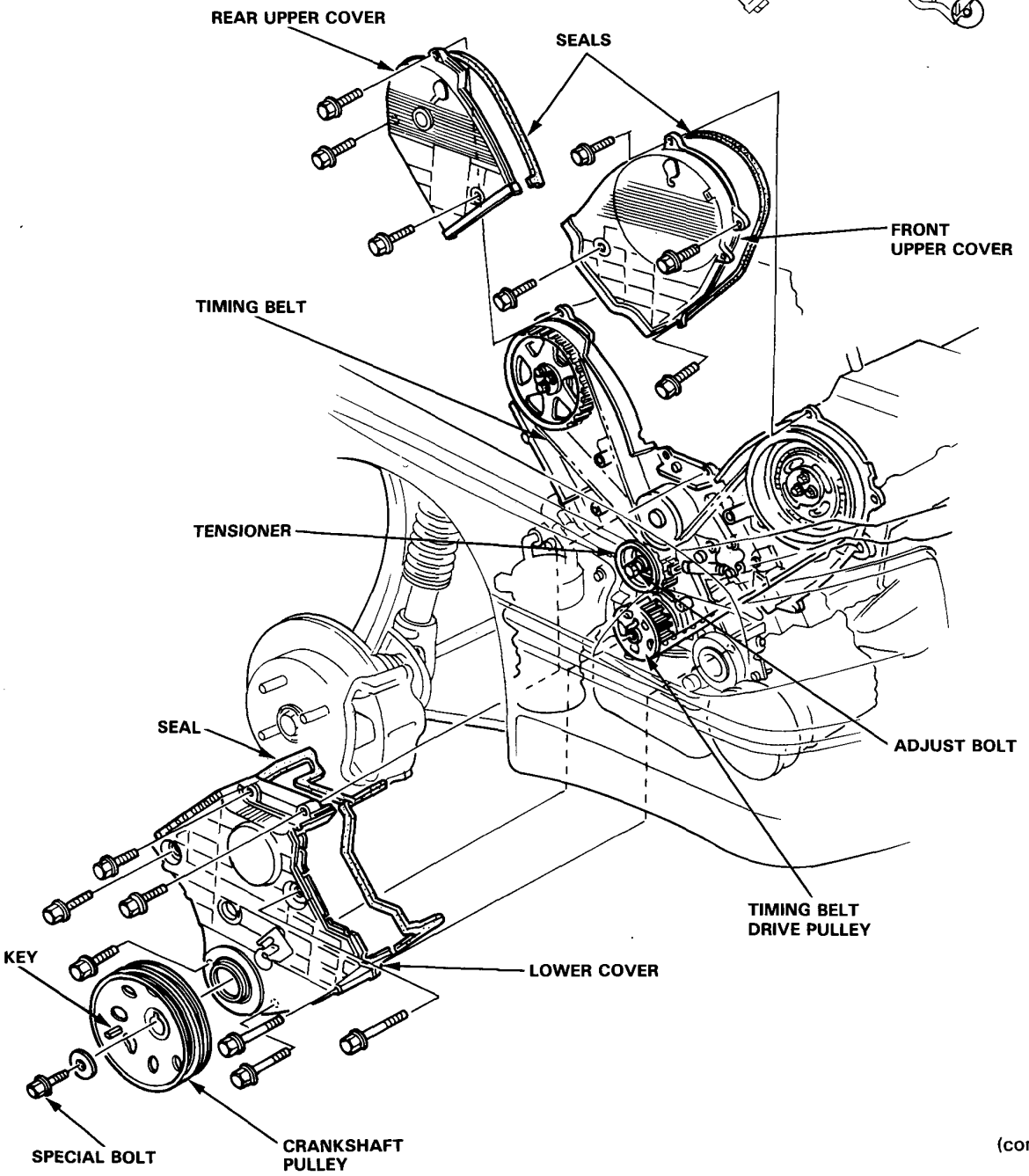

(cont'd)

Replacement (cont'd)

13. The installation procedure is the reverse of the removal procedure. Only the key points are described here.

14. Remove all spark plugs.

15. Advance the crankshaft by about 15° from No. 1 cylinder compression TDC. After adjusting the front and rear camshaft pulleys to No. 1 cylinder compression TDC, return the crankshaft pulley by about 15° again to adjust the TDC.

    - Use pulley holder to rotate the driven pulley.

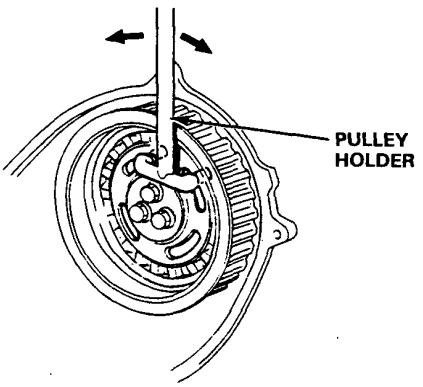

16. Fix the adjust bolt with the timing belt tensioner at the belt loosening position.

    - Push the tensioner bracket with a flat blade screwdriver to loosen belt tension.

    - Do not push on the belt.

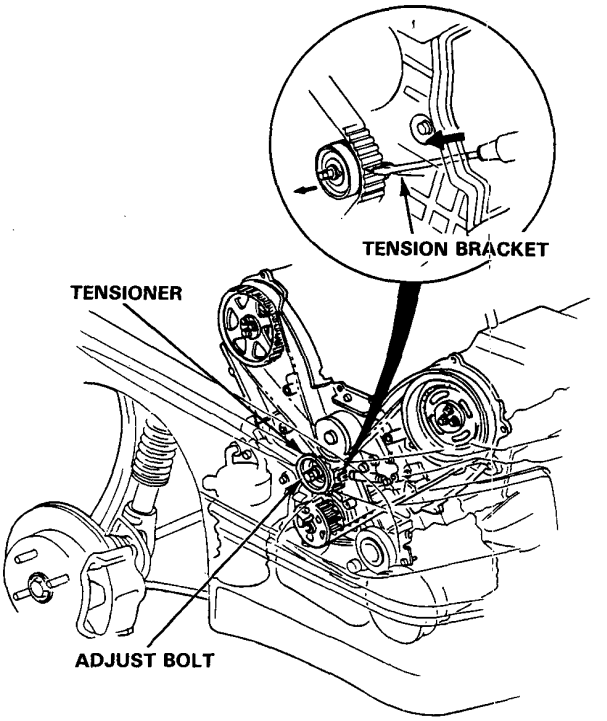

17. Install the timing belt.

    - Install the belt in the following sequence: crankshaft pulley, front camshaft pulley, water pump pulley, tensioner and rear camshaft pulley.

    - For easy installation, advance the rear camshaft pulley by about a half tooth from the TDC position.

18. Loosen the adjust bolt, and retighten it after tensioning the belt.

19. Rotate the crankshaft about 5 or 6 turns clockwise so that the belt may fit in position on the pulleys.

20. Carry out timing belt tension adjustment (page 5-13).

Positioning Crankshaft Before Installing Timing Belt

CAUTION: When installing the timing belt, advance the crankshaft pulley by 15° from No. 1 cylinder compression TDC. After adjusting the front and rear camshaft pulleys to No. 1 cylinder compression TDC, return the crankshaft pulley by about 15° again to adjust TDC.

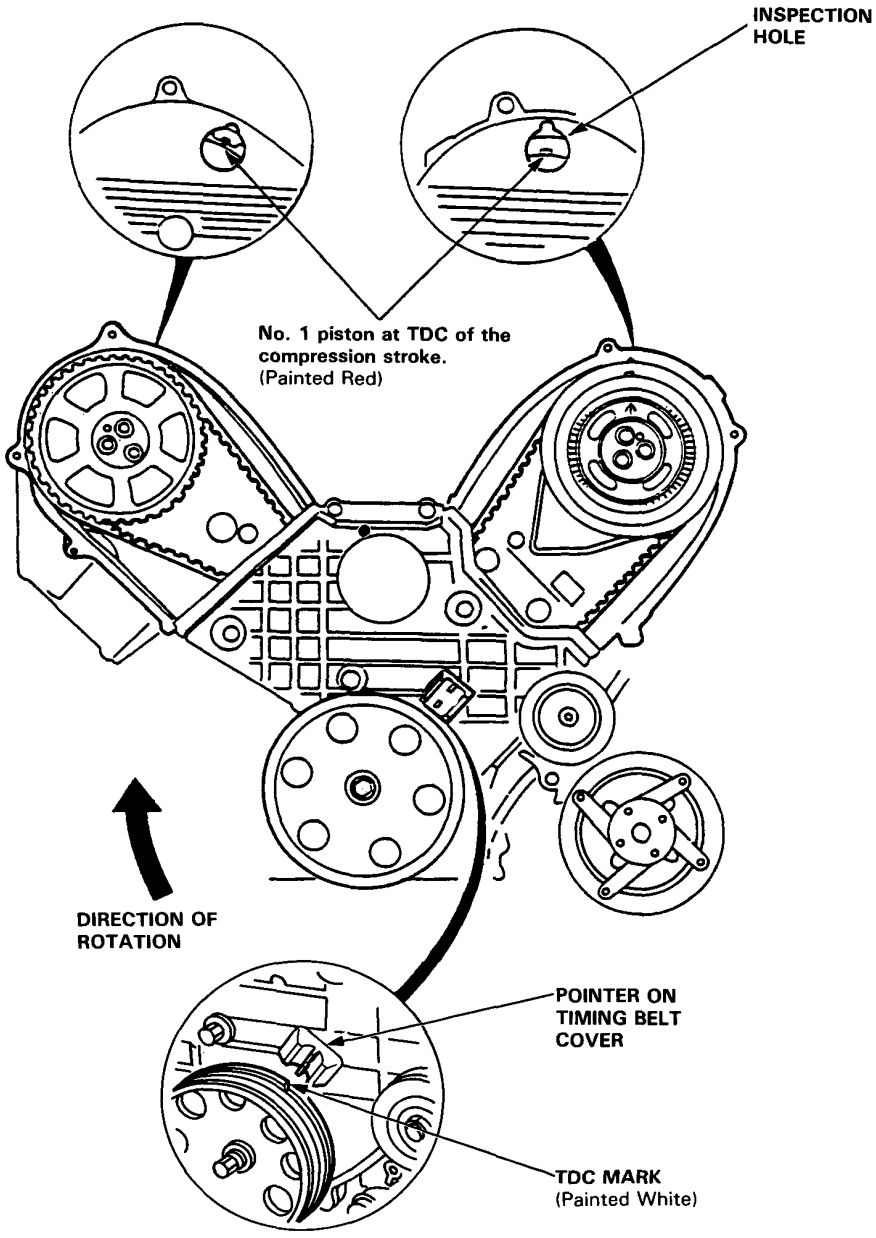

Cylinder Heads Removal/Installation

Special Tools

Ref. No.	Tool Number	Description	Q'ty	Remarks
①	07746–0030400	Attachment, 35 mm	1	Camshaft oil seal
②	07746–0030100	Driver	1	

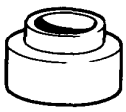

①

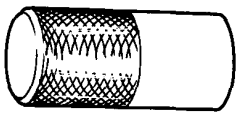

②

Cylinder Heads

Removal (engine removal not required)

CAUTION: To avoid damaging the cylinder heads, wait until the coolant temperature drops below 38°C (100°F) before loosening the retaining bolts.

NOTE: Use new O-rings and gaskets whenever reassembling.

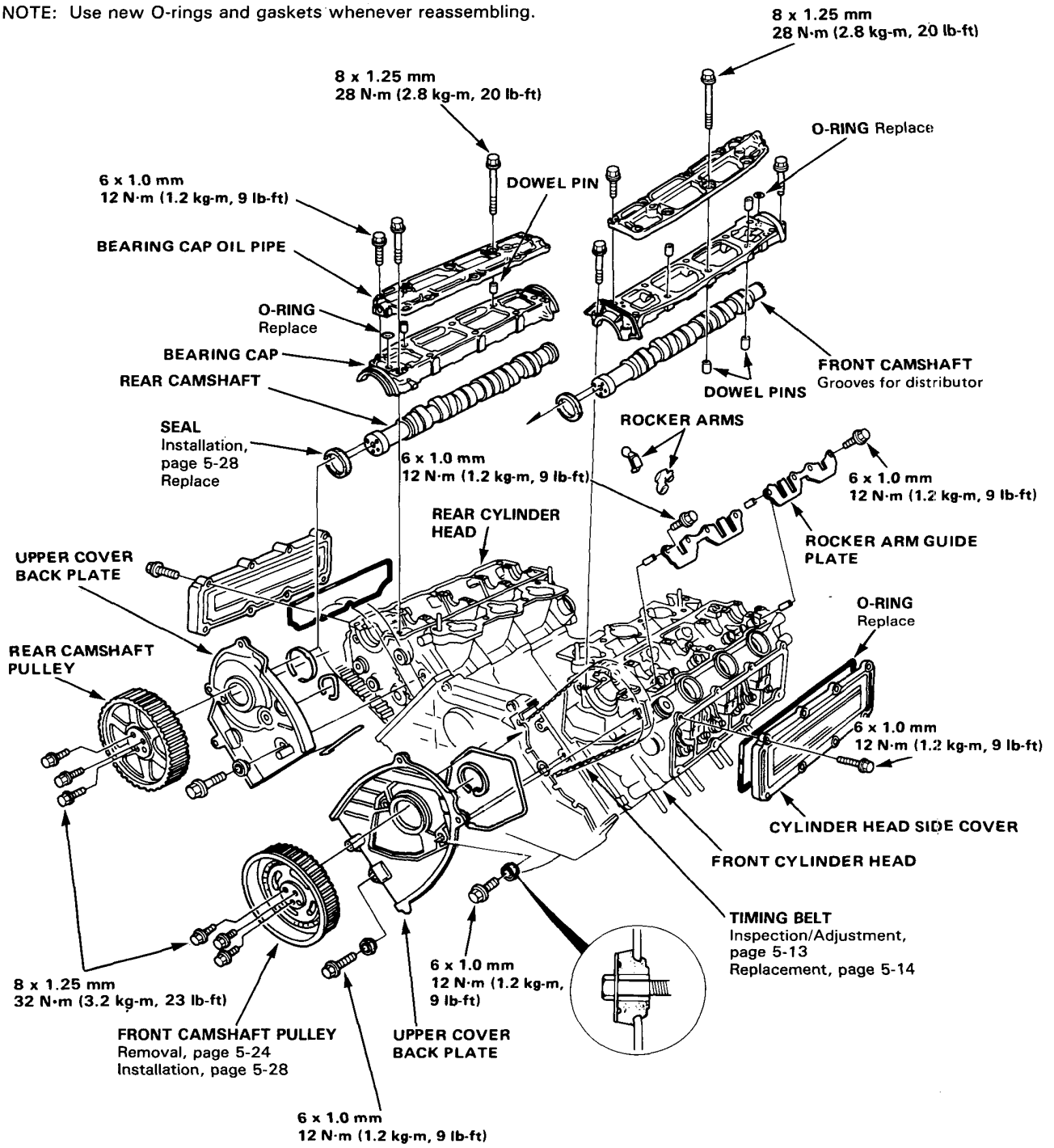

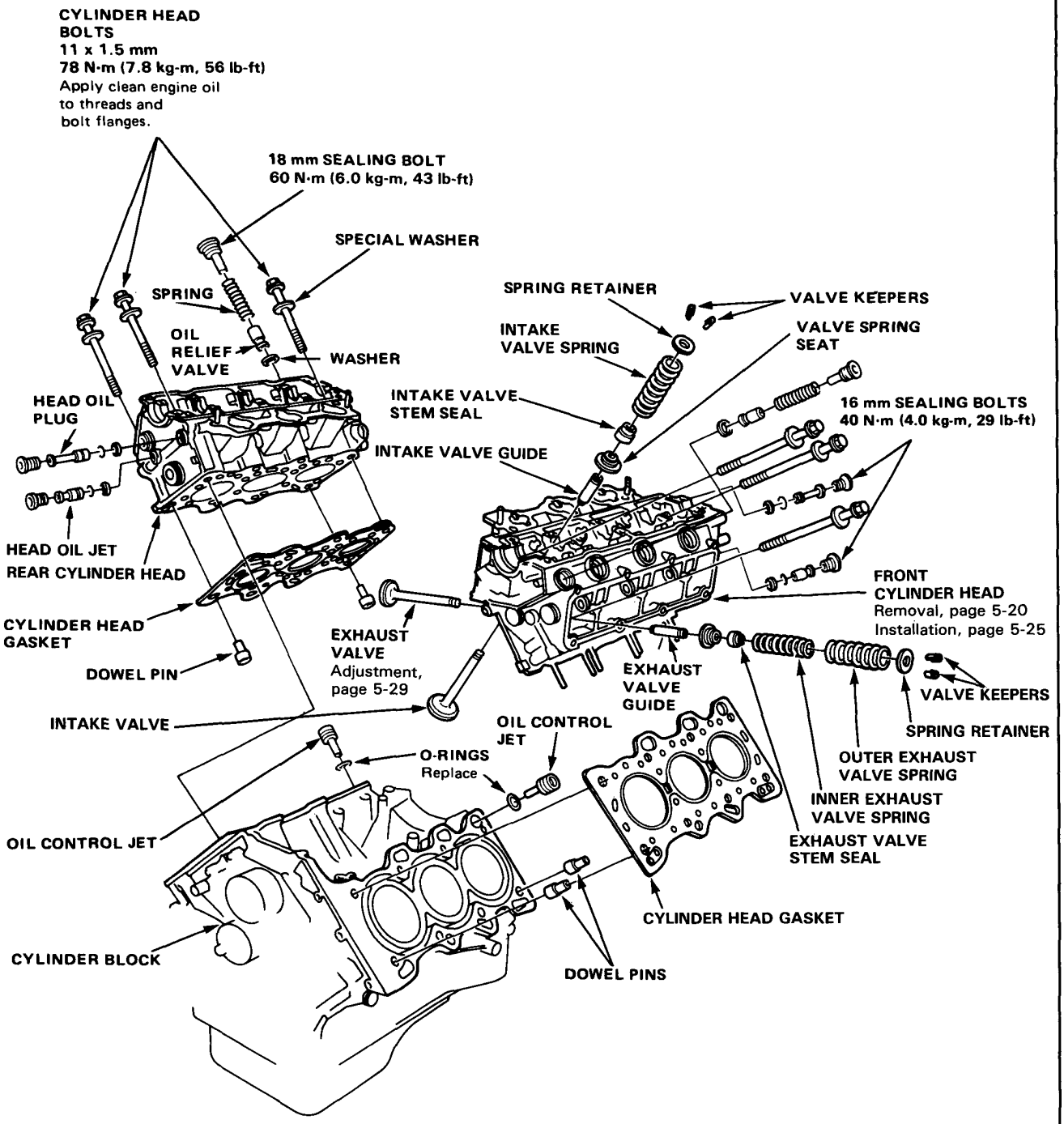
CYLINDER HEAD BOLTS
11 x 1.5 mm
78 N·m (7.8 kg-m, 56 lb-ft)
Apply clean engine oil to threads and bolt flanges.
18 mm SEALING BOLT
60 N·m (6.0 kg-m, 43 lb-ft)
SPECIAL WASHER
SPRING
OIL RELIEF VALVE
WASHER
HEAD OIL PLUG
HEAD OIL JET
REAR CYLINDER HEAD
CYLINDER HEAD GASKET
DOWEL PIN
INTAKE VALVE
EXHAUST VALVE
Adjustment, page 5-29
SPRING RETAINER
INTAKE VALVE SPRING
INTAKE VALVE STEM SEAL
INTAKE VALVE GUIDE
VALVE KEEPERS
VALVE SPRING SEAT
16 mm SEALING BOLTS
40 N·m (4.0 kg-m, 29 lb-ft)
FRONT CYLINDER HEAD
Removal, page 5-20
Installation, page 5-25
EXHAUST VALVE GUIDE
VALVE KEEPERS
SPRING RETAINER
OUTER EXHAUST VALVE SPRING
INNER EXHAUST VALVE SPRING
EXHAUST VALVE STEM SEAL
OIL CONTROL JET
O-RINGS
Replace
OIL CONTROL JET
CYLINDER BLOCK
CYLINDER HEAD GASKET
DOWEL PINS

(cont'd)

Removal (engine removal not required) (cont'd)

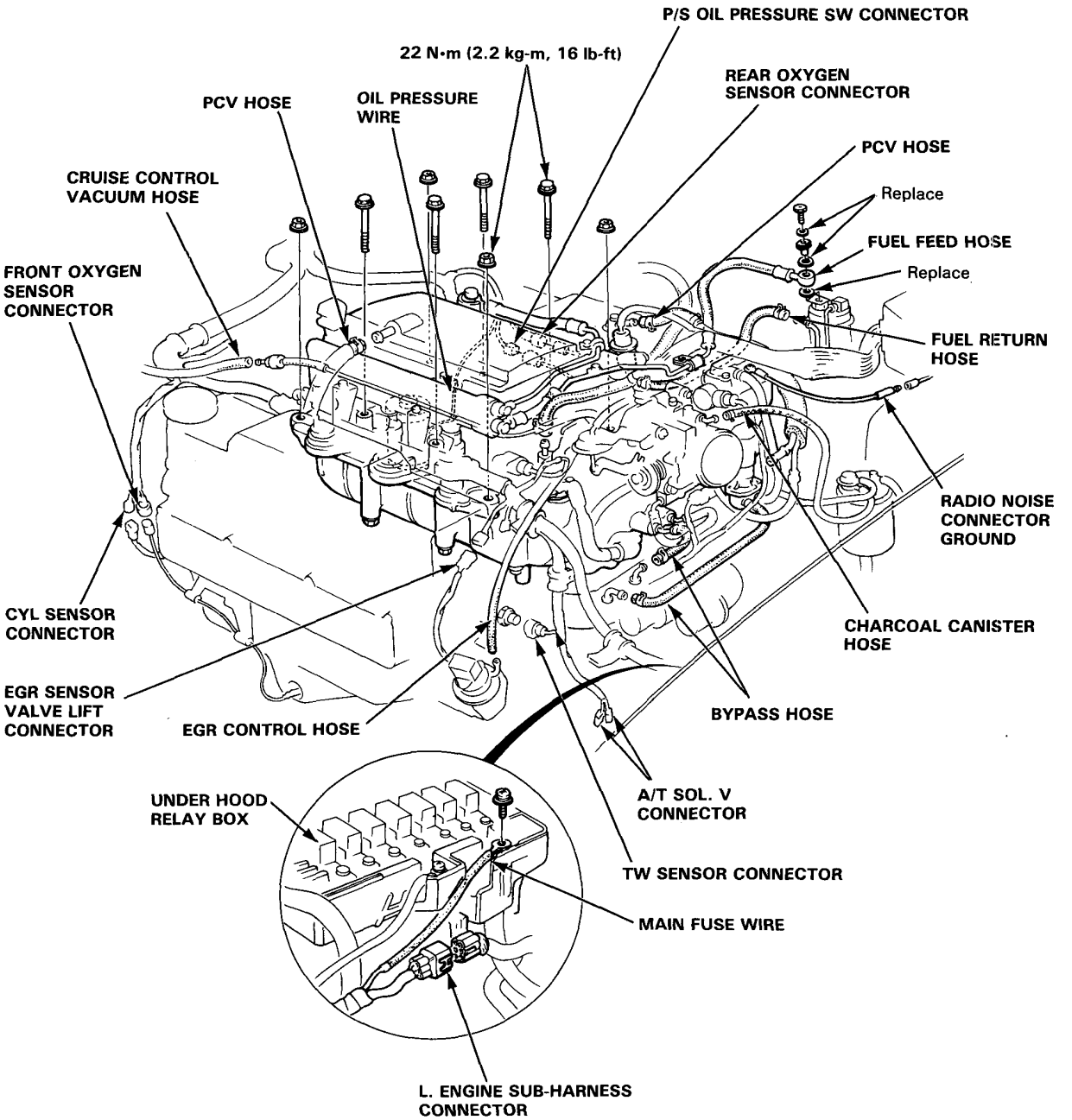

CAUTION: To avoid damaging the cylinder heads, wait until the coolant temperature drops below 38°C (100°F) before loosening the retaining bolts.

NOTE:
- Inspect the timing belt before removing the cylinder head.
- Turn the flywheel so that the No. 1 cylinder is at top-dead-center (page 5-17).
- Mark all emissions hoses before disconnecting them.

1. Disconnect the negative terminal from the battery.
2. Drain the cooling system (page 5-32).
3. Remove the brake booster vacuum hose from the tubing manifold (page 5-34).
4. Remove the engine secondary ground cable from the cylinder head and transmission housing (pages 5-33 and 34).
5. Disconnect the radio condenser connector, ignition coil wire and ignition primary connector (page 5-34).
6. Remove the air cleaner cover.
7. Relieve fuel pressure.
   WARNING Do not smoke while working on fuel system, keep open flame or spark away from work area. Drain fuel only into an approved container.
8. Disconnect the fuel hose and fuel return hose (page 5-34).
9. Disconnect the throttle cable at the throttle body (page 5-34).
10. Disconnect the charcoal canister hose at the throttle valve.
11. Disconnect the engine sub harness connectors and couplers from the cylinder head and intake manifold.
    - Six injector couplers
    - TA sensor connector
    - Temperature unit connector
    - Ground terminals at the fuel pipe
    - Throttle sensor connector
    - TW sensor connector
    - Crankshaft angle sensor coupler
    - EGR valve connector
    - Four wire harness clamps
12. Disconnect the oxygen sensor coupler.
13. Disconnect the upper radiator hose, heater inlet hose, and bypass inlet hose from the cylinder head (page 5-33).
14. Remove the hose between the water passage and the intake manifold.
15. Disconnect the connecting pipe-to-valve body hose and bypass outlet hose.
16. Disconnect the spark plug caps, then remove the distributor assembly from the cylinder head.
17. Remove the intake manifold cover from intake manifold.
18. Remove the wire harness cover.
19. Remove the alternator pulley cover.
20. Remove the alternator and belt.
21. Remove the power steering oil pump and disconnect the pump hoses.
22. Remove the hose clamp bolt on the body.

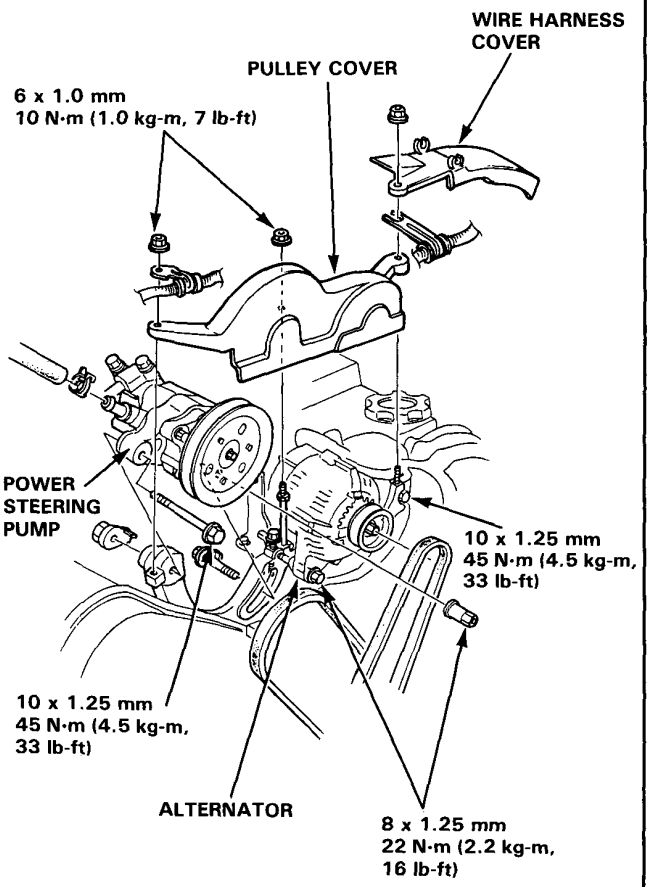

23. Disconnect the idle control solenoid hoses.
24. Remove the cruise control actuator (page 5-33).
25. Remove the exhaust header pipe nuts.
26. Disconnect the exhaust header pipes from manifolds.
27. Remove the air cleaner case mount bolts.
28. Disconnect the hose from the intake manifold to the breather chamber.
29. Remove the air cleaner case and intake hose.

(cont'd)

Removal (engine removal not required) (cont'd)

30. Remove the EGR pipe nuts from the cylinder head (Ex.KQ).

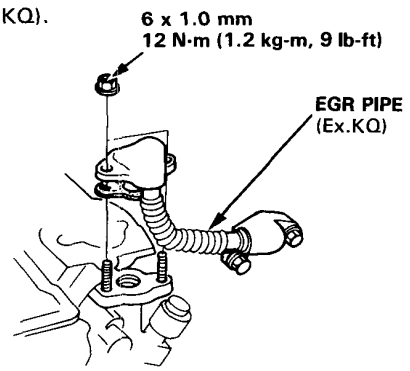

31. Remove the exhaust manifold cover nuts.

32. Remove the air suction pipe fasteners from exhaust manifold and air suction valve. (KG,KX,KS)

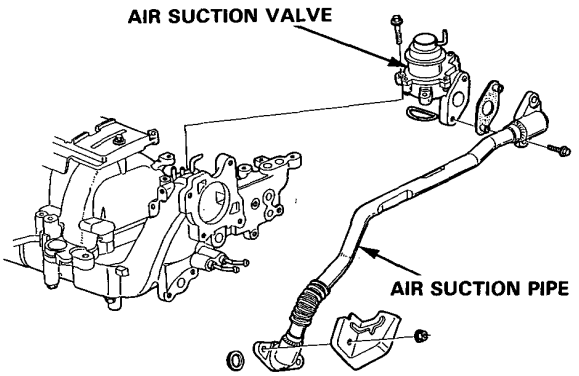

33. Remove the intake manifold assembly from the cylinder head.

34. Remove the water passage assembly from front and rear cylinder heads.

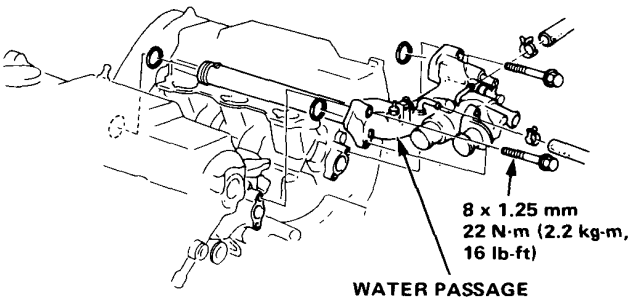

35. Remove the timing belt upper covers.

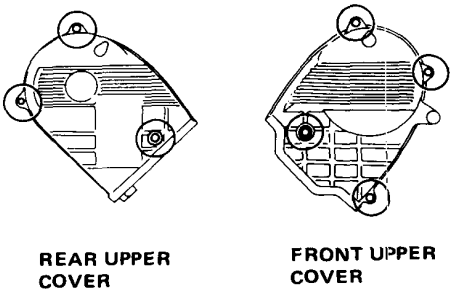

36. Loosen the tensioner adjustment bolt, then remove the timing belt.

- Advance the crankshaft by about 15° before removing the timing belt to prevent interference between the piston and valve.

CAUTION: Do not crimp or bend timing belt more than 90° or less than 25 mm (1 in.) in diameter.

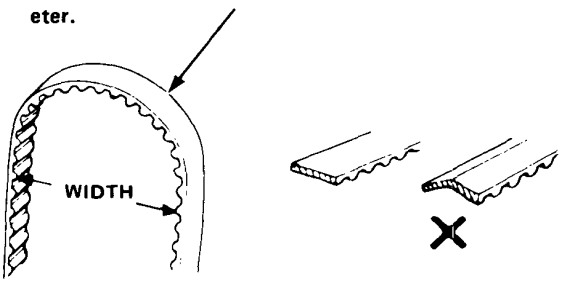

37. Remove the front and rear camshaft pulleys.

- Before removing the rear pulley, adjust the cam position so that no valve is fully open.
- Remove the pulley mounting bolts with a pulley holder and double-end wrench. For the rear pulley, remove the lower bolt last.

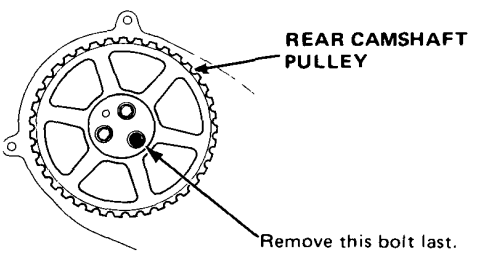

38. Remove the upper cover back plates.

39. Remove the valve covers.

40. Remove the head side covers.

41. Remove the bearing cap oil pipes and bearing caps, then remove the camshaft.

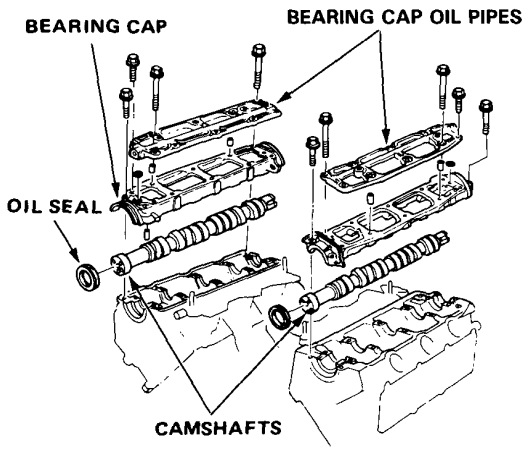

42. Remove the intake and exhaust inside rocker arms and pushrods.

CAUTION: Identify the parts as they are removed to ensure reinstallation in the proper locations.

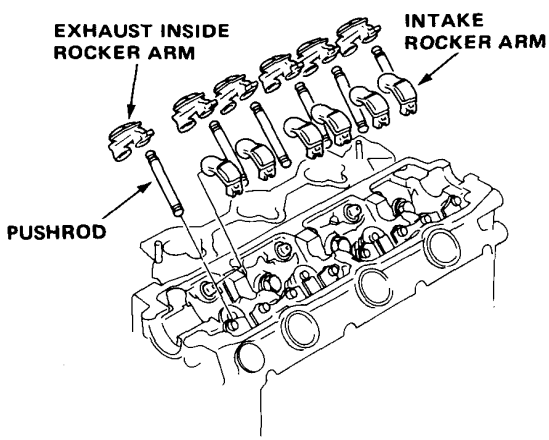

43. Remove the cylinder head bolts, then remove the cylinder head.

CAUTION: To prevent warpage, unscrew bolts 1/3 turn each time and repeat sequence until loose.

Inspection

1. Inspect the hydraulic tappet for wear or damage or for a clogged oil hole.

   CAUTION: Never attempt to disassemble the tappets.

2. Bleed the hydraulic tappet as follows:
   - Keep the hydraulic tappet upright into the oil.
   - While pushing the check ball with a 2 mm stick, move the plunger up and down slowly until no air bubbles appear from the hydraulic tappet.
   - Quickly push the plunger and check if it is locked.

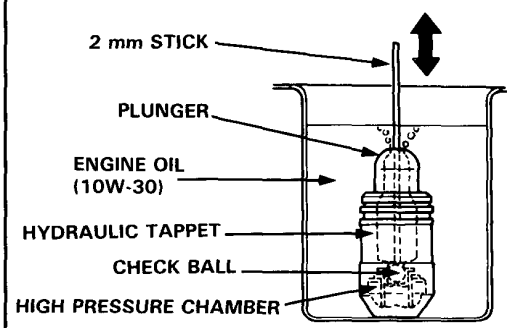

3. Remove the hydraulic tappet and try to compress it quickly by hand. Measure the compression stroke with a dial gauge on a surface plate.

   NOTE: Slow pushing does not cause close contact of the check ball, resulting in increased sink.

   Compression Stroke: 0.01—0.08 mm (0.0004—0.003 in.)

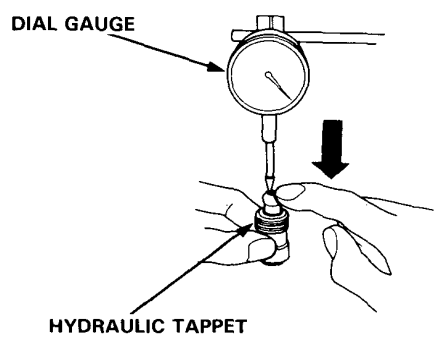

Installation

1. Install the cylinder head in reverse order of removal:
   - Always use a new head gasket.
   - Cylinder head and engine block surface must be clean.
   - Turn the crankshaft so the No. 1 piston is at TDC.
2. Install the exhaust manifolds and tighten the nuts in a criss-cross pattern in 2 or 3 steps, beginning with the inner nuts.
3. Install the exhaust manifold covers.

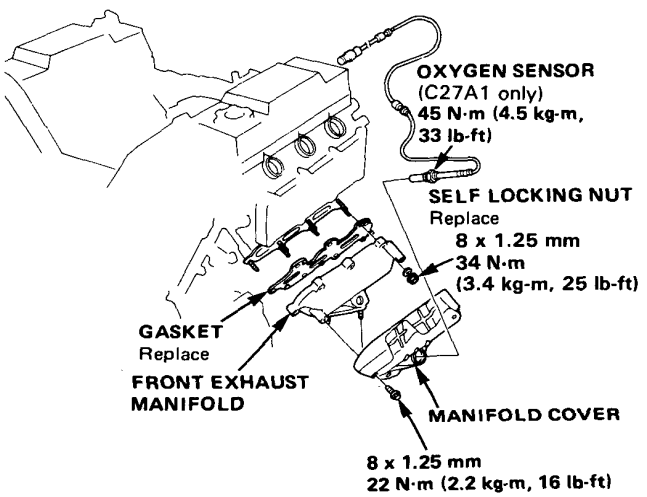

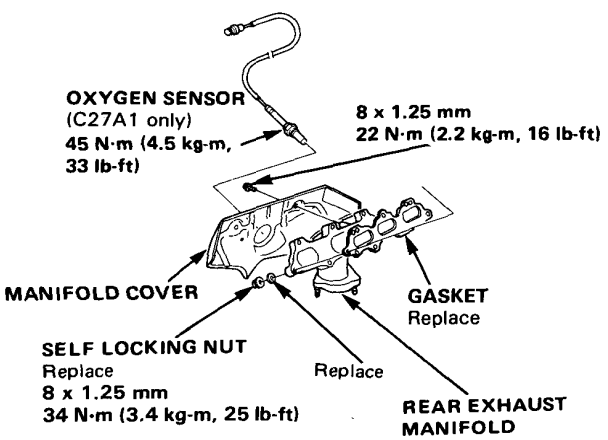

CAUTION: Do not touch or get dirt on the probe ends of the Oxygen Sensors. Any contamination will affect their performance.

4. Cylinder head dowel pins and oil control jets must be aligned.

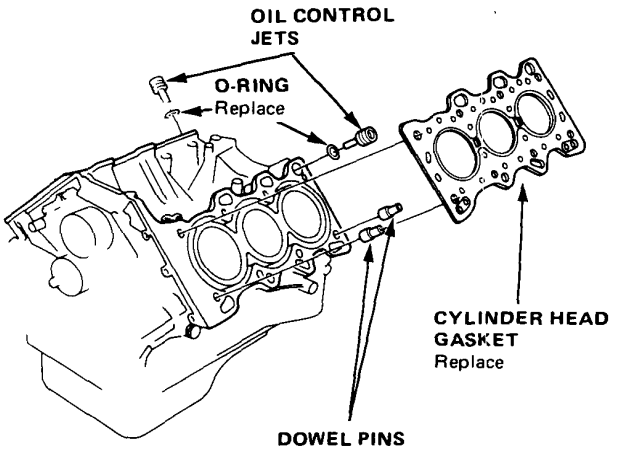

5. Tighten cylinder head bolts in two steps.
   In the first step tighten all bolts and nuts, in sequence, to about 40 N·m (4.0 kg-m, 29 lb-ft); in the final step tighten, in same sequence, to 78 N·m (7.8 kg-m, 56 lb-ft).

CYLINDER HEAD TORQUE SEQUENCE

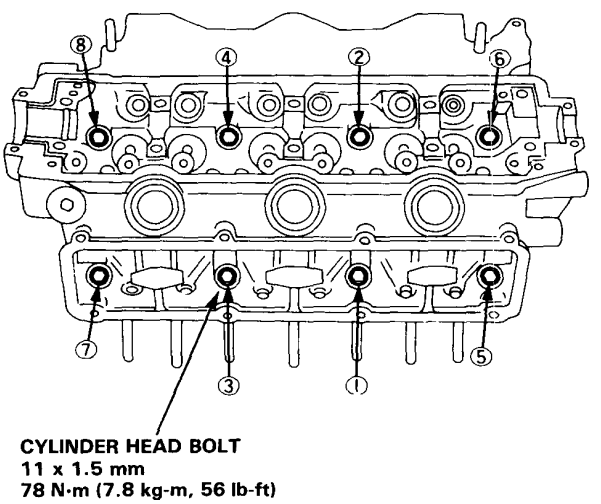

CAUTION: If you suspect the condition or performance of any of the tappets, follow the Inspection/Bleeding procedure (page 5-25) before reassembly.

6. Pour engine oil into the cylinder head hydraulic tappet mounting hole, up to the level of the oil path.

7. Install the hydraulic tappet in the cylinder head.

CAUTION:
- **Do not rotate the hydraulic tappet while inserting it.**
- **Carefully follow the special start-up procedure after the head is reassembled (page 5-29) to allow the tappets to fill with oil.**

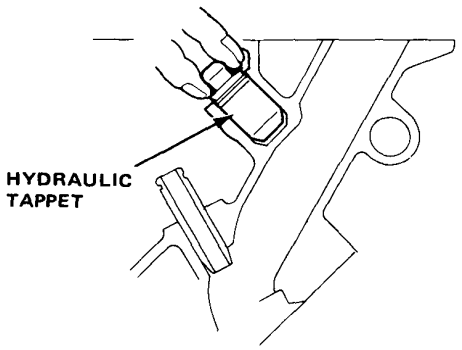

8. Pour engine oil into the oil fillers on the cylinder head.

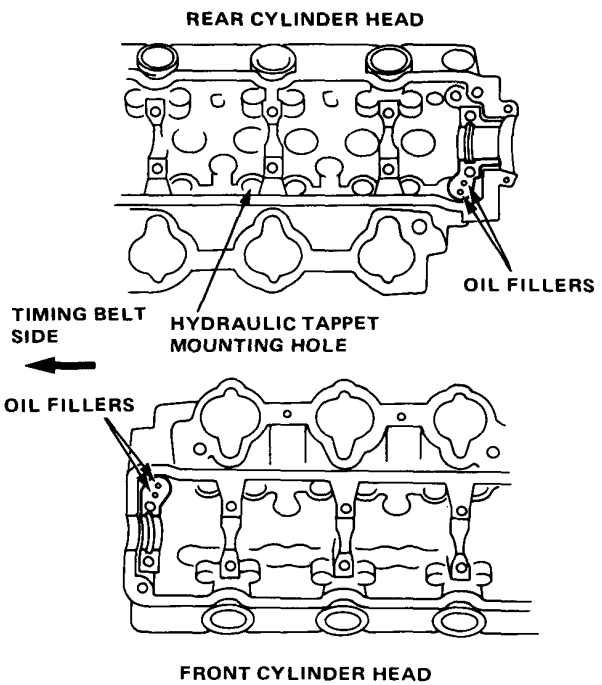

9. Install the push rods and rocker arms.

CAUTION:
- ***Install each part in its original position.***
- **Loosen the rocker arm adjusting screws and locknuts before installation.**

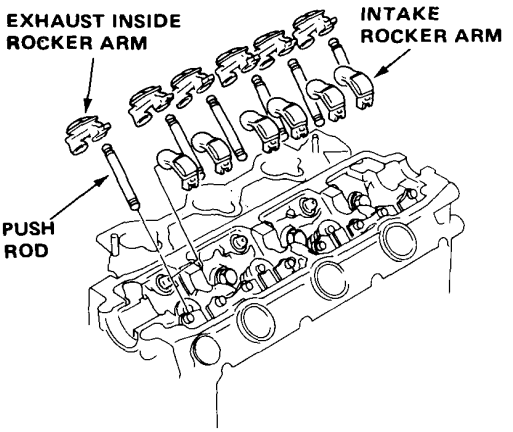

10. Install the camshafts and camshaft oil seals.

CAUTION: Note the locations of the camshafts; the front camshaft has a groove for driving the distributor.

NOTE:
- Make sure that the camshaft is mounted parallel with the rocker arm slipper surface.
- Advance the crankshaft by 15° from No. 1 cylinder TDC of compression stroke to prevent interference between the piston and valve.
- Place the rear camshaft on the cylinder head at the position where the cam is not pushing the valve.
- Preset the oil seal, with its spring side facing inward.
- Install the rear camshaft sealing rubber.
- Do not apply oil to the cam holder side of the oil seal.

(cont'd)

Installation (cont'd)

11. Apply liquid gasket to the camshaft oil seal mounting surface and on the head contact surface. Temporarily tighten the bearing caps. See the tightening sequence step 8.

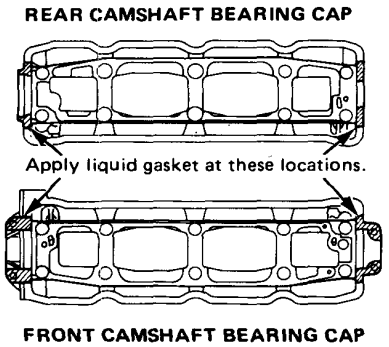

- The camshaft seal can be installed without removing the camshaft bearing caps. The following tools can be used for seal installation if the engine is out of the car.

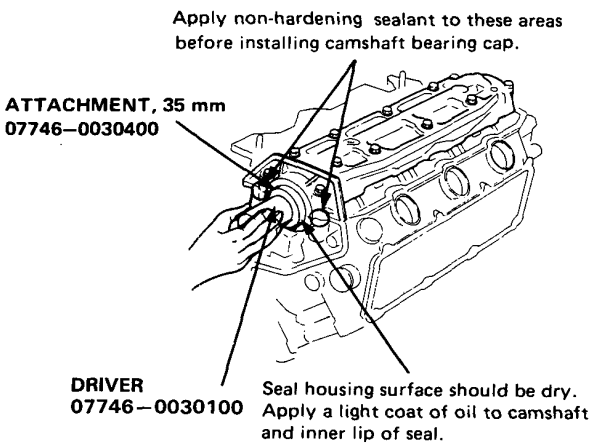

- If the engine is installed in the car, camshaft seal can be installed as shown below.

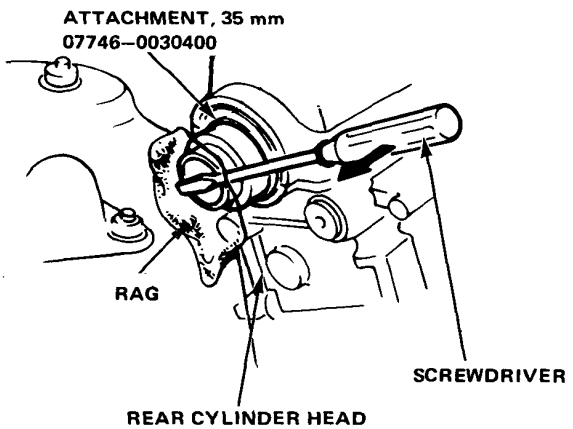

12. Carefully fit the camshaft oil seal until it contacts the bearing cap.

13. Tighten the bolts of the camshaft bearing cap diagonally from the center.

    NOTE:
    - Tighten the 6 mm bolts last.
    - Make sure that the oil seal is properly positioned.

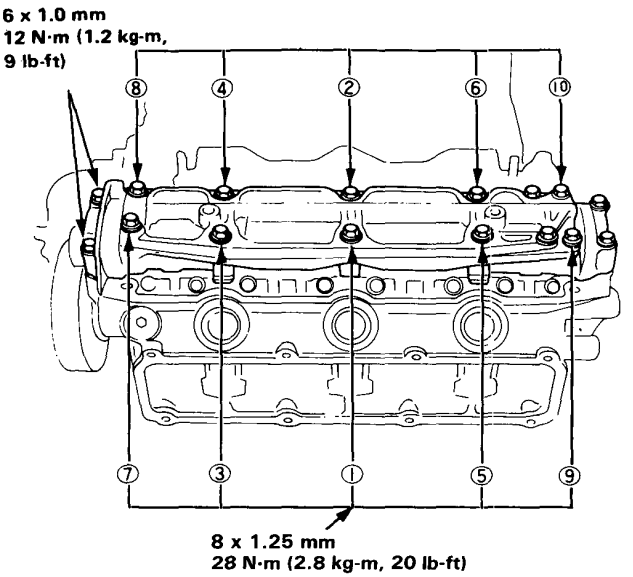

14. Install the timing belt upper cover plate.

15. Install the camshaft pulley.

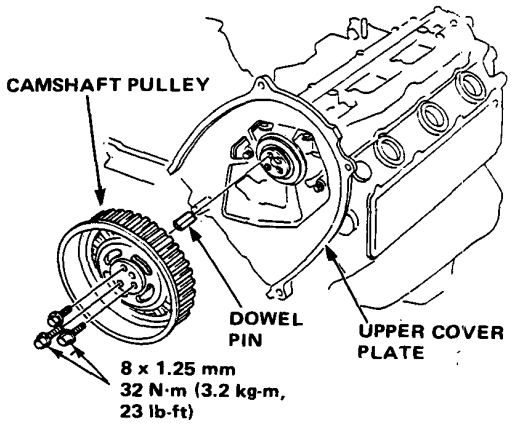

16. Install the timing belt.

17. Adjust the valve timing (page 5-17).

18. Adjust the timing belt tension (page 5-13).

19. Adjust the exhaust rocker arm adjusting screws.

—1. Adjust the front and rear camshafts at the TDC of No. 1 piston's compression stroke.

- No. 1, No. 2 and No. 4 cylinders now have the exhaust valves closed.

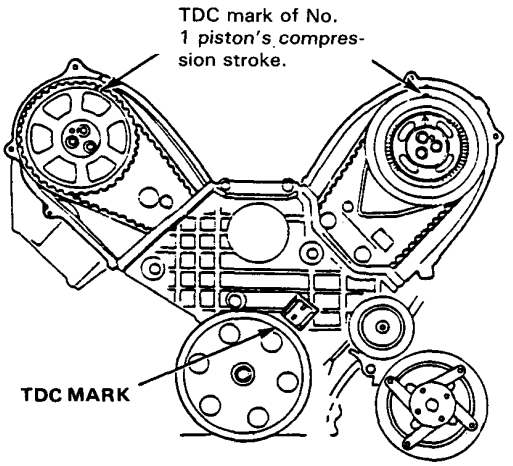

—2. Tighten the adjusting screw for No. 1 cylinder.

NOTE: When you feel the screw contact the valve, tighten the screw 1.5 turns.

- Tighten the locknut firmly.

—3. Set the adjusting screws for No. 2 and No. 4 cylinders in the same way.

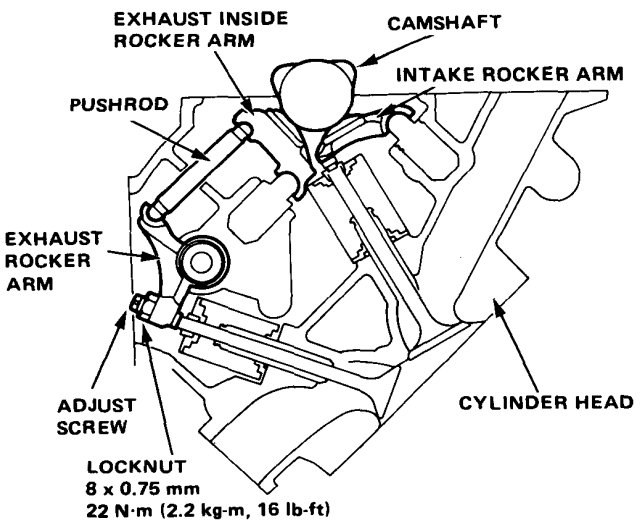

—4. Rotate the crankshaft pulley one turn clockwise (as viewed from the pulley side) to adjust to the TDC of No. 5 piston's compression stroke.

- The exhaust valves of cylinders No. 3, No. 5 and No. 6 are now closed.

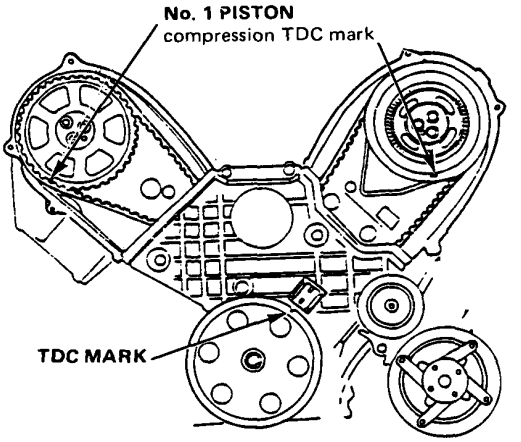

—5. Set the adjusting screws for No. 3, No. 5 and No. 6 cylinders in the same way as in step —2 above.

20. Install the valve covers and head side covers.

- Replace the O-rings for the head side covers.

SPECIAL START-UP PROCEDURE:

21. After the heads are reassembled, make sure the engine sits for at least five minutes to allow the hydraulic tappets to reach proper oil level.

22. Remove the spark plugs. Have someone crank the engine; feel for compression from each cylinder at the spark plug holes. It may be necessary to crank the engine through several cycles to confirm compression.

- If any cylinder does not have compression, it may be necessary to disassemble that head and check the suspected tappet (page 5-25).

- If all cylinders have compression, reinstall the plugs and start the engine.

Engine Removal/Installation

Special Tools

Ref. No.	Tool Number	Description	Q'ty	Remarks
①	07944–6110200	Pin Driver, 8 mm	1	
②	07941–6920002	Ball joint Remover	1	
③	07966–6340011	Engine Block Hanger	1	

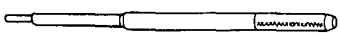

①

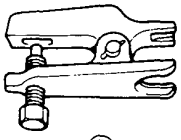

②

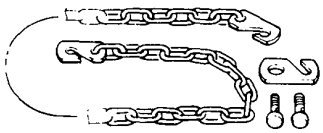

③

WARNING

- **Make sure jacks and safety stands are placed properly (pages 1-5 thru 7), and hoist brackets are attached to correct positions on the engine (page 5-36).**
- **Apply parking brake and block rear wheels, so car will not roll off stands and fall on you while working under it.**

CAUTION: Use fender covers to avoid damaging painted surfaces.

WARNING Use care when removing radiator cap and when draining radiator, engine and transmission, to avoid scalding by hot coolant or oil.

1. Disconnect the battery negative terminal first, then the positive terminal.

2. Fix the engine hood in vertical position by removing the open stay mounting bolt on the hood side and fitting it to the mounting hole near the hinge.

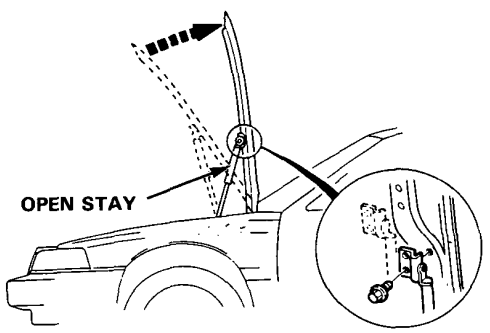

3. Remove the battery and then the battery case.

4. Remove the air intake tube, air cleaner and resonator tube as an assembly.

5. Remove the engine splash guard.

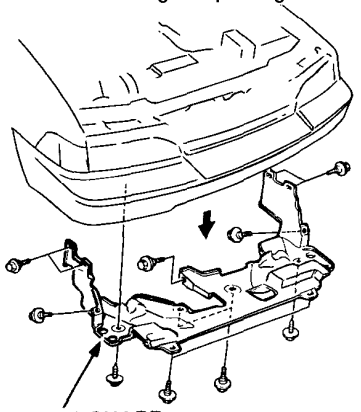

Remove the splash guard from under the engine.

6. Remove the drain plug to drain engine oil.

   - Remove the filler cap to speed draining.

   CAUTION: After draining the engine oil, always replace drain washers with new ones.

7. Drain transmission oil.

   - Use a 3/8" drive socket wrench to remove the drain plug.

   - Remove the level gauge or filler bolt to speed draining.

8. Remove the drain plug to drain coolant from the radiator.

   - Remove the radiator cap to speed draining.

   - Loosen two engine drain bolts front and rear to drain coolant from the cylinder head.

   - Connect rubber hoses to the drain bolts for easy operation.

9. Disconnect the pressure switch wire from the oil filter case.

10. Disconnect two water hoses from the engine oil cooler.

11. Remove the oil filter to drain the oil.

12. Remove the oil filter base from the engine block.

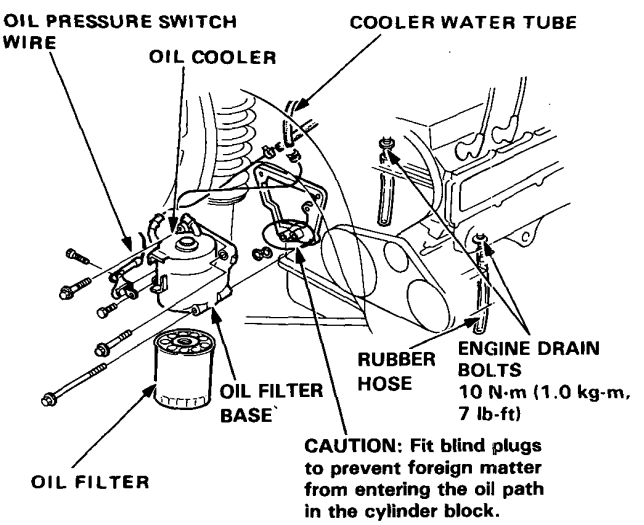

13. Disconnect upper and lower radiator hoses from the water passage.

14. Disconnect the ATF cooler hose from the cooler pipes (Automatic only).

15. Disconnect the engine sub-harness from the body side.

- Four connectors and clamp in the right engine compartment
- Two main fuse connectors and coupler in the left engine compartment (illustration on next page)
- Coil wire and primary lead connectors, and condenser connector (illustration on next page)
- Two ground cables for the cylinder head and transmission

16. Disconnect the connector from the power steering pump, and disconnect the two hoses.

17. Disconnect the hose from the cruise control actuator.

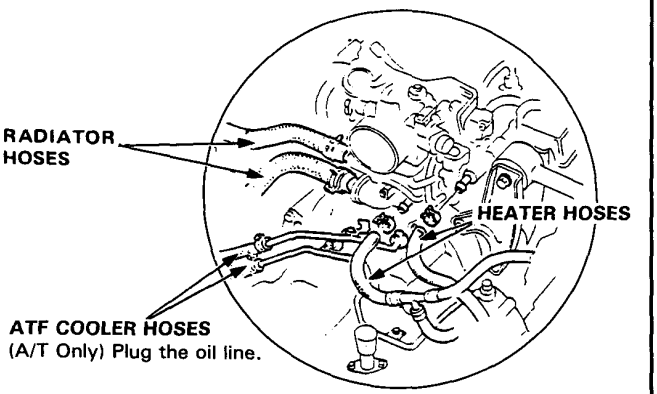

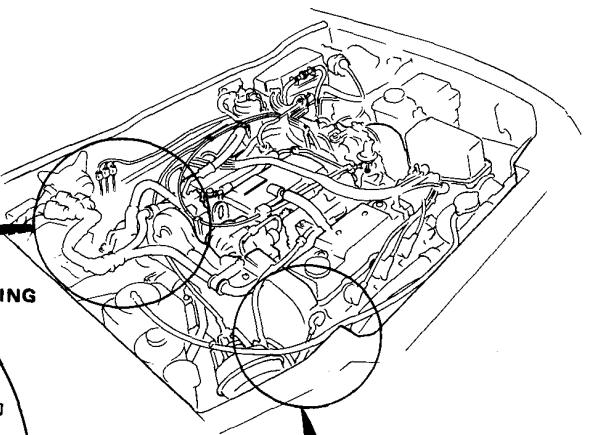

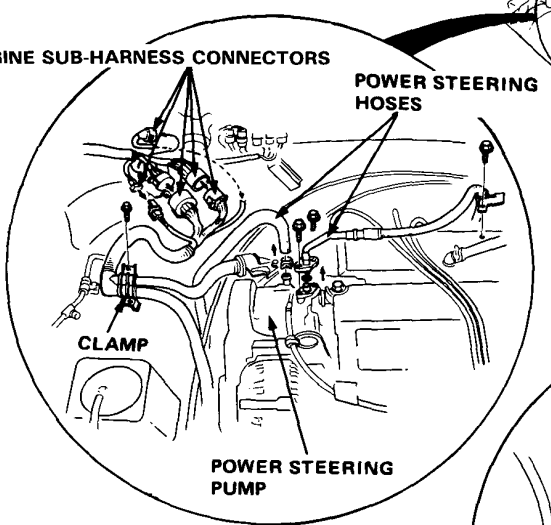

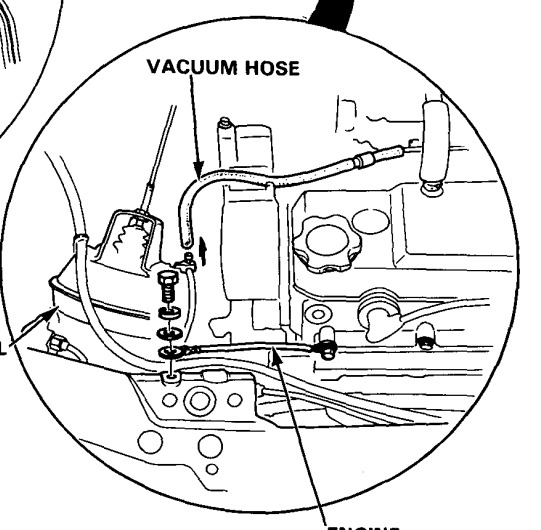

(cont'd)

(cont'd)

18. Disconnect the vacuum hose from brake booster.

19. Relieve the fuel prssure (section 6).

    CAUTION: Before disconnecting the fuel line, fuel pressure should be relieved by loosening the service bolt on the top of the fuel filter while engine is stopped.

    WARNING Do not smoke while working on fuel system. Keep open flame away from work area. Drain fuel only into an approved container.

20. Disconnect the fuel hose and fuel return hose.

21. Disconnect the throttle cable from the throttle body.

    NOTE: Take care not to bend the cable when removing it. Do not use pliers to remove the cable from the linkage. Always replace a kinked cable with a new one.

22. Disconnect the emission hoses from the control box from the connection stay.

23. Remove the speed sensor.

24. Loosen adjusting bolt to remove the compressor belt, and then remove the air conditioner compressor (illustration on next page).

    NOTE: The compressor can be removed without disconnecting the hoses.

    - Place the removed compressor on the frame so as not to damage it.

THROTTLE CABLE
Remove the throttle cable by loosening the locknut and adjusting nut, then slip the cable end out the bracket and linkage.

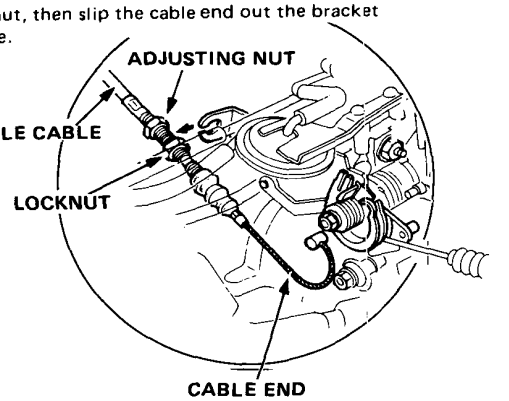

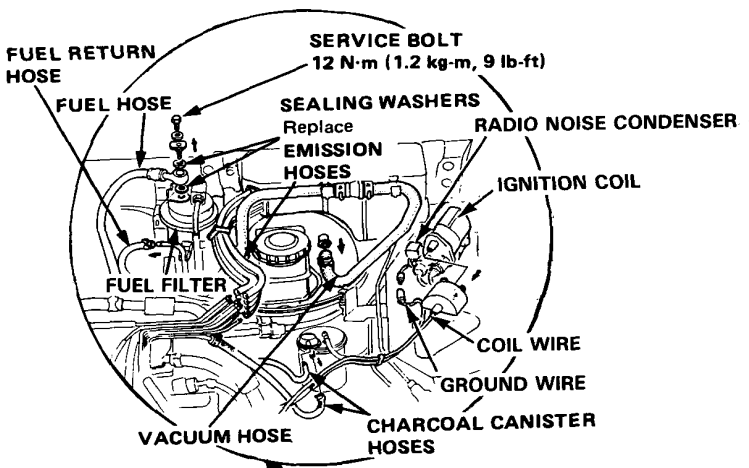

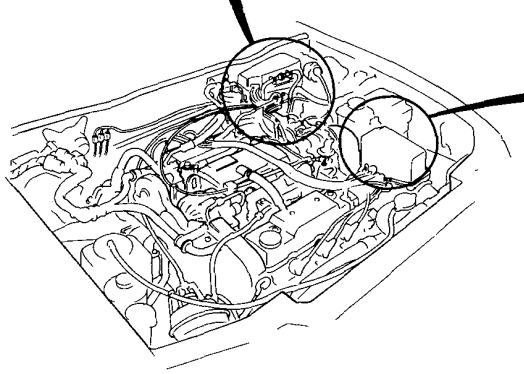

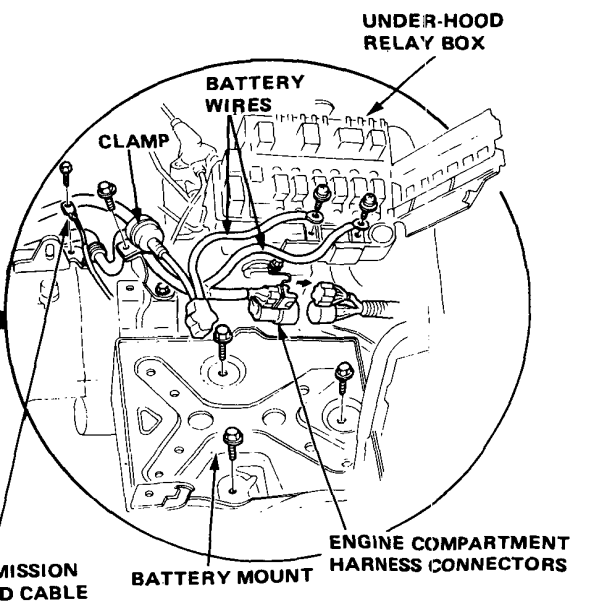

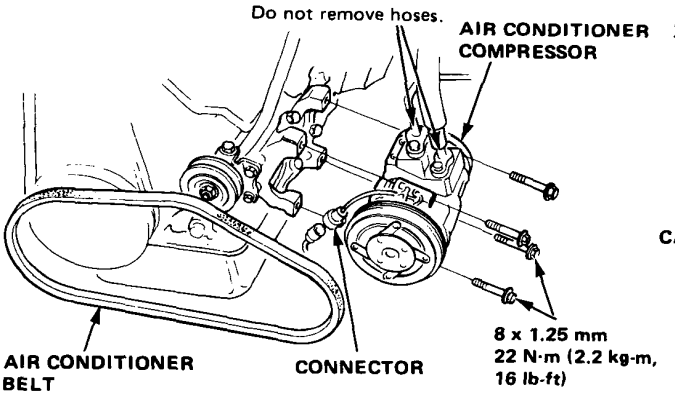

25. Remove the exhaust pipe from the front and rear manifolds.

26. Disconnect the shift cable from the selector (A/T only).

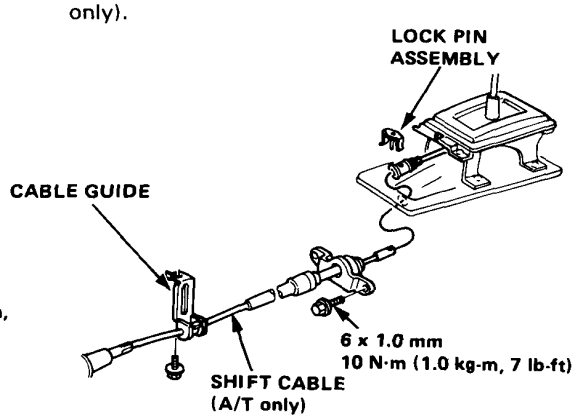

- Remove the center console.
- Place the shift lever in reverse, then remove the lock pin from the end of the shift cable.

NOTE: On reassembly, check the cable adjustment (section 14)

27. Remove the change rod and change extension (M/T only).

28. Remove the clutch release hose from the clutch damper on the transmission housing (M/T only).

29. Remove the ball joint.

- Use ball joint remover 07941-6920003.

30. Remove the drive shaft.

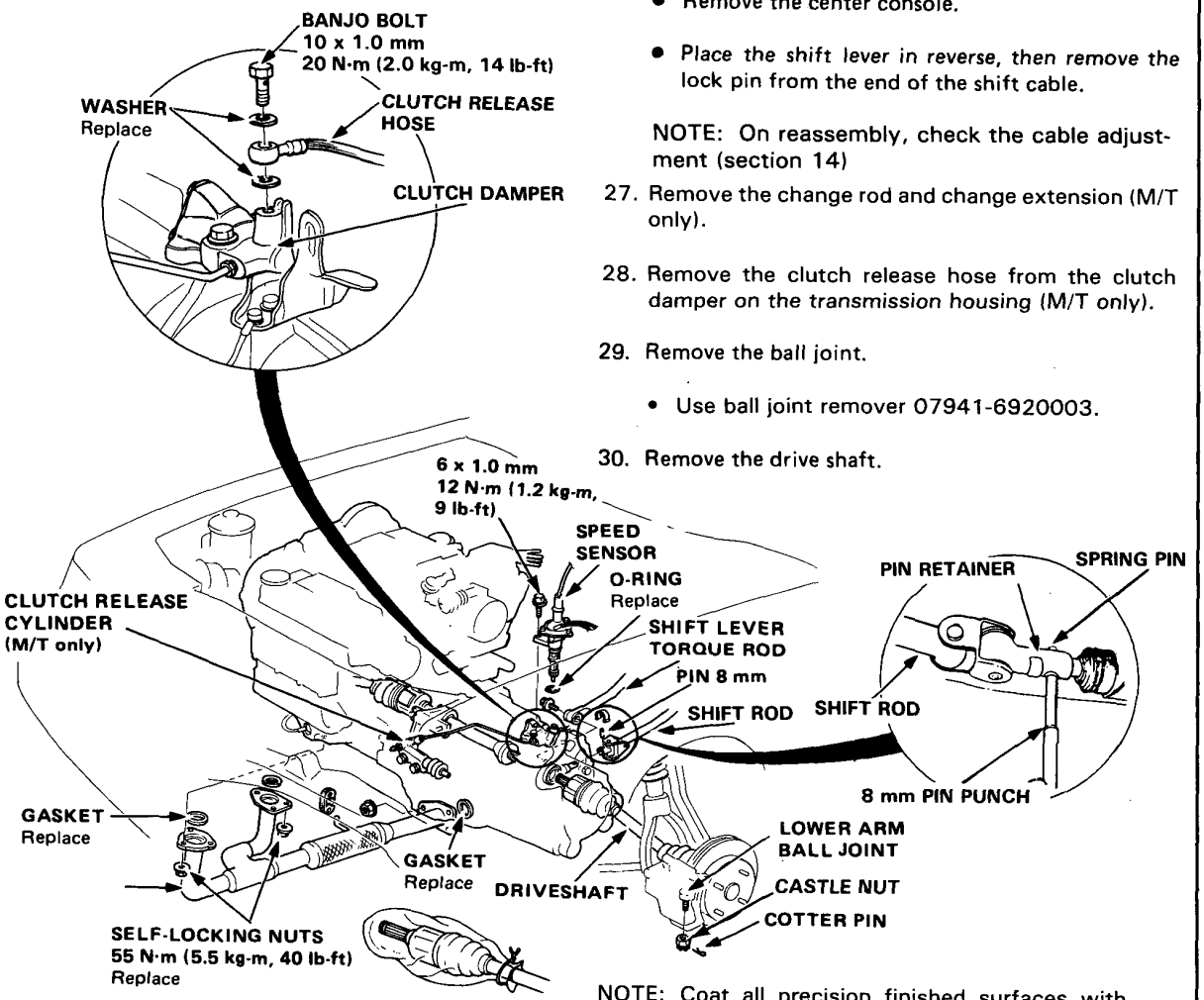

CAUTION: If you disconnect the hoses from the speed sensor, power steering fluid will flow out.

NOTE: Coat all precision finished surfaces with clean engine oil or grease. Tie plastic bags over the driveshaft ends.

(cont'd)

31. Attach a chain hoist to the engine block and raise the hoist just enough to remove slack from chain.

32. Remove the engine side mount bracket bolts, then remove the transmission mount nut and the bracket bolts.

33. Remove the front and rear engine mount nuts.

34. Remove the torque rod.

35. Check that wires and tubes are completely removed from the engine, and lift the engine slowly with the chain. Remove the front and rear engine brackets from the mount bolts.

36. Tilt the engine about 30 degrees, then hoist it out of the engine compartment.

CAUTION: Use care to avoid damaging the body.

WARNING Do not crawl under the car when hoisting the engine.

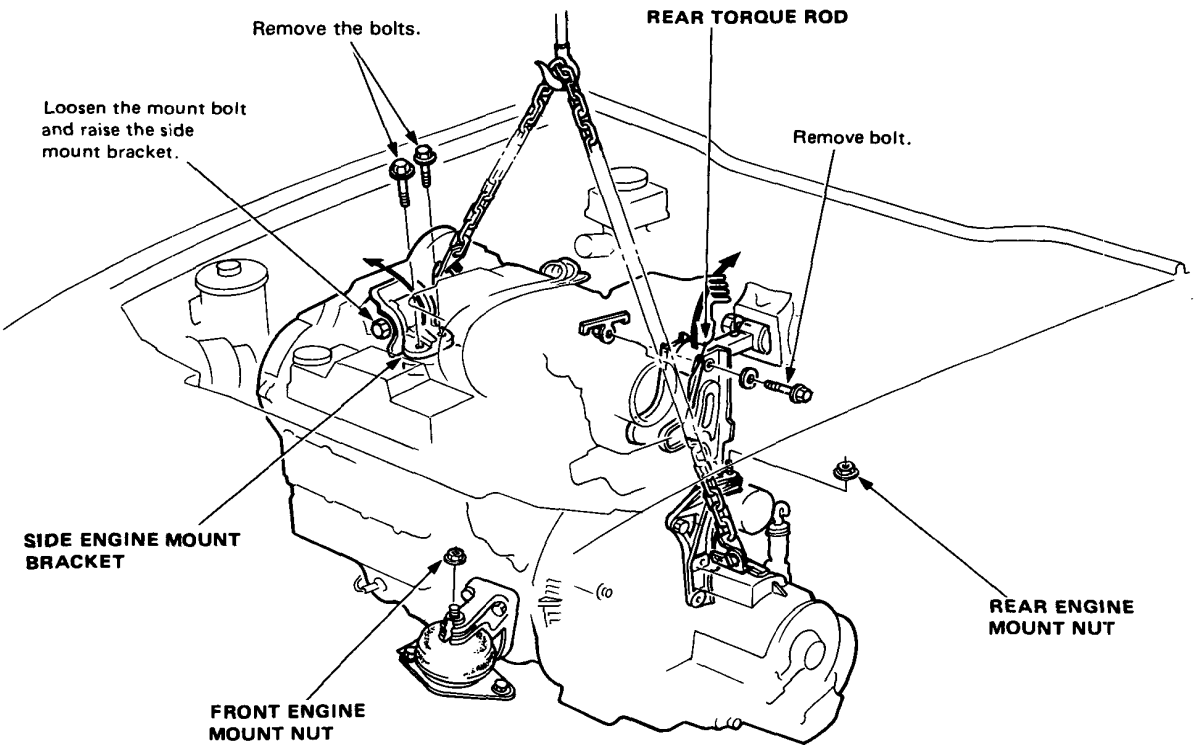

NOTE:
- For proper suppression of noise and vibration, and maximum bushing life, tighten the bolts in the sequence shown with the bushings centered in their mounts.

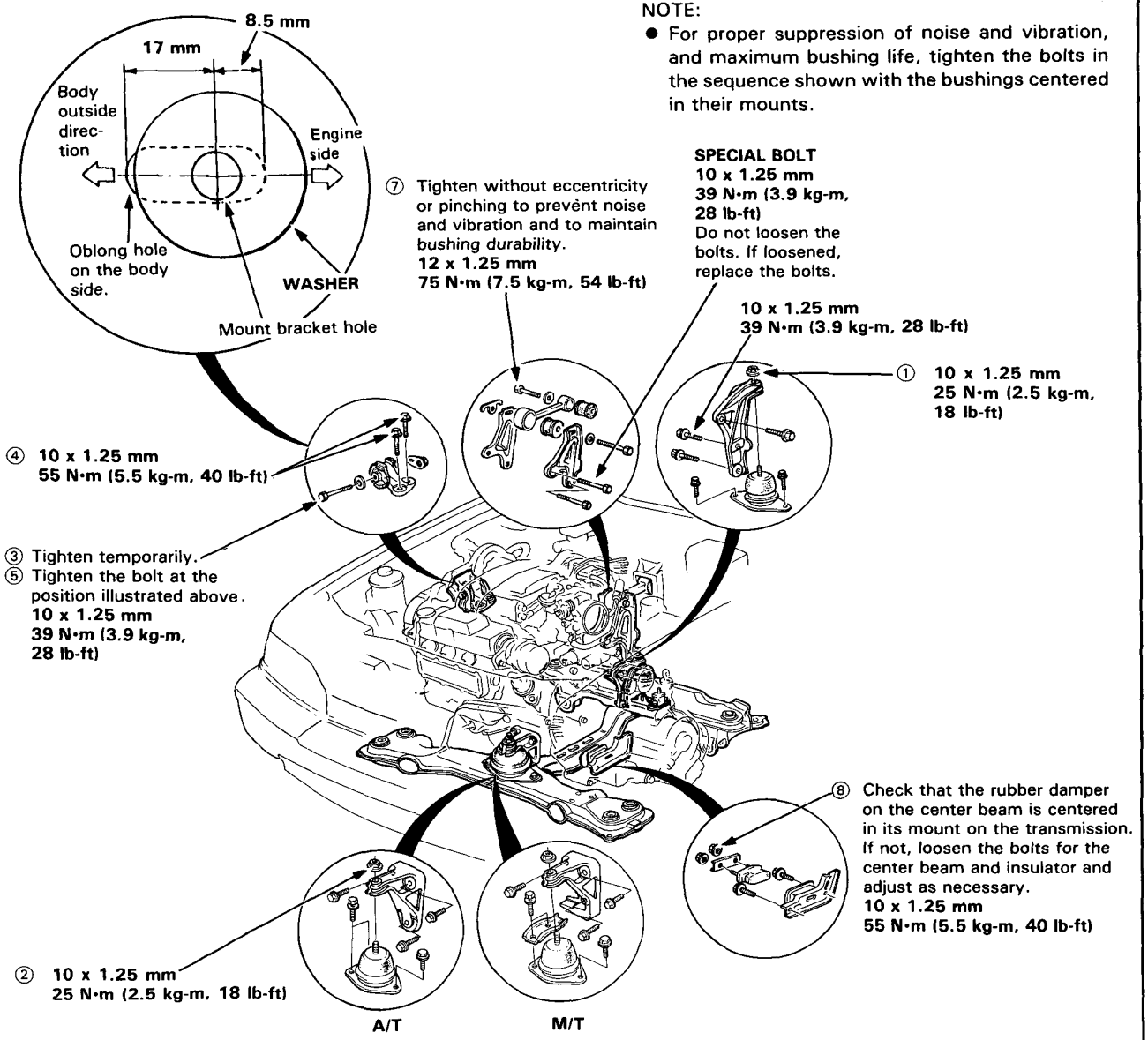

37. Install the engine in the reverse order of removal. After the engine is in place:
    - Torque engine mount bolts in sequence shown.

    CAUTION: Failure to tighten the bolts in the proper sequence can cause excessive noise and vibration, and reduce bushing life; check that the bushings are not twisted or offset.
    - Check that the spring clip on the end of each driveshaft clicks into the differential.

    CAUTION: Use new spring clips on installation.
    - Bleed air from the cooling system at the bleed bolt with the heater valve open.
    - Adjust the throttle cable tension.
    - Adjust the alternator belt tension.
    - Check the clutch pedal free play.
    - Check that the transmission shifts into gear smoothly.
    - Connect the air conditioning hoses, wiring and V-belt.
    - Clean battery posts and cable terminals with sandpaper, assemble, then apply grease to prevent corrosion.

(cont'd)

NOTE: For proper suppression of noise and vibration, and maximum bushing life, tighten the bolts to the torque mentioned below.

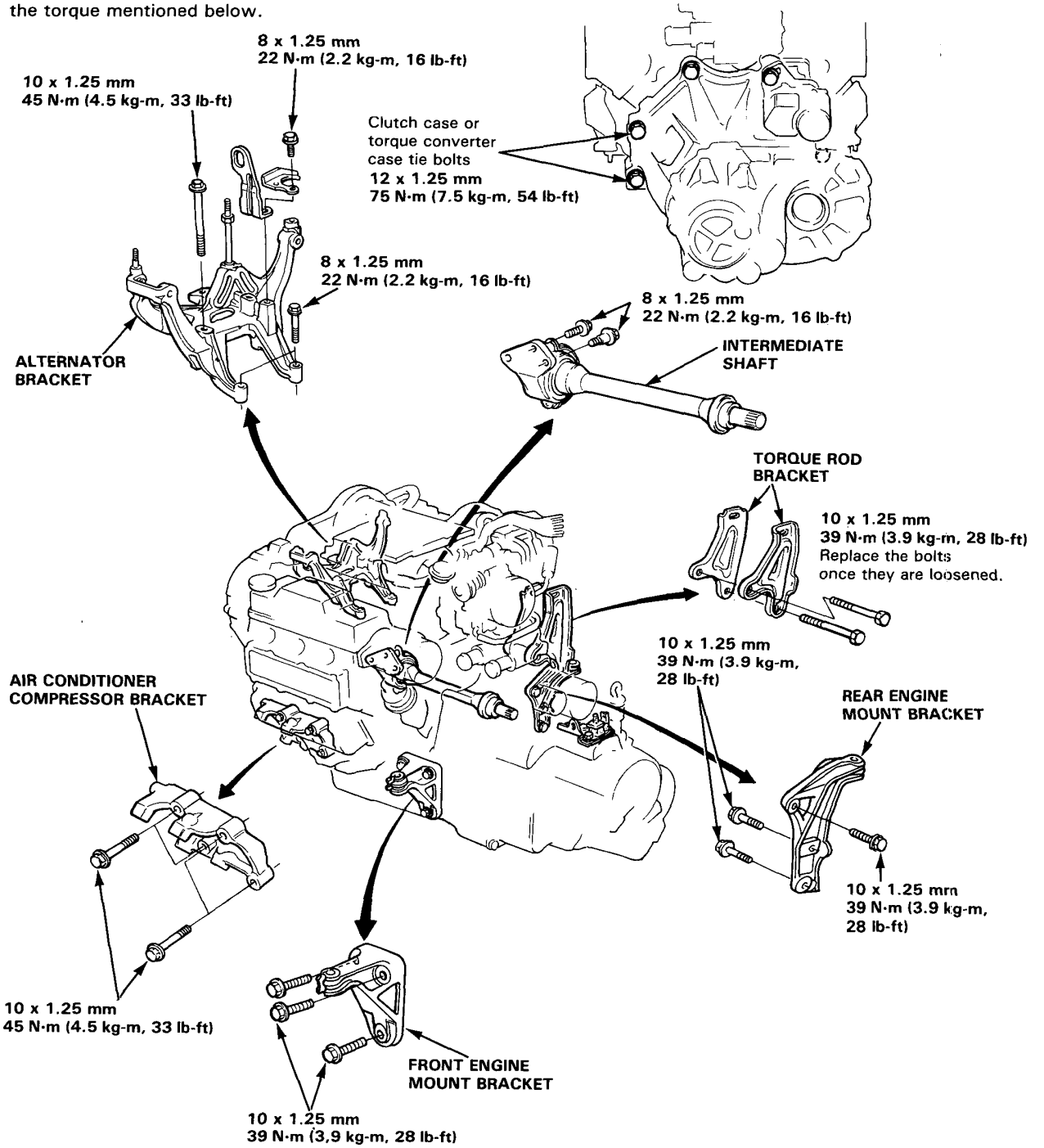

Intake Manifold

Illustrated Index

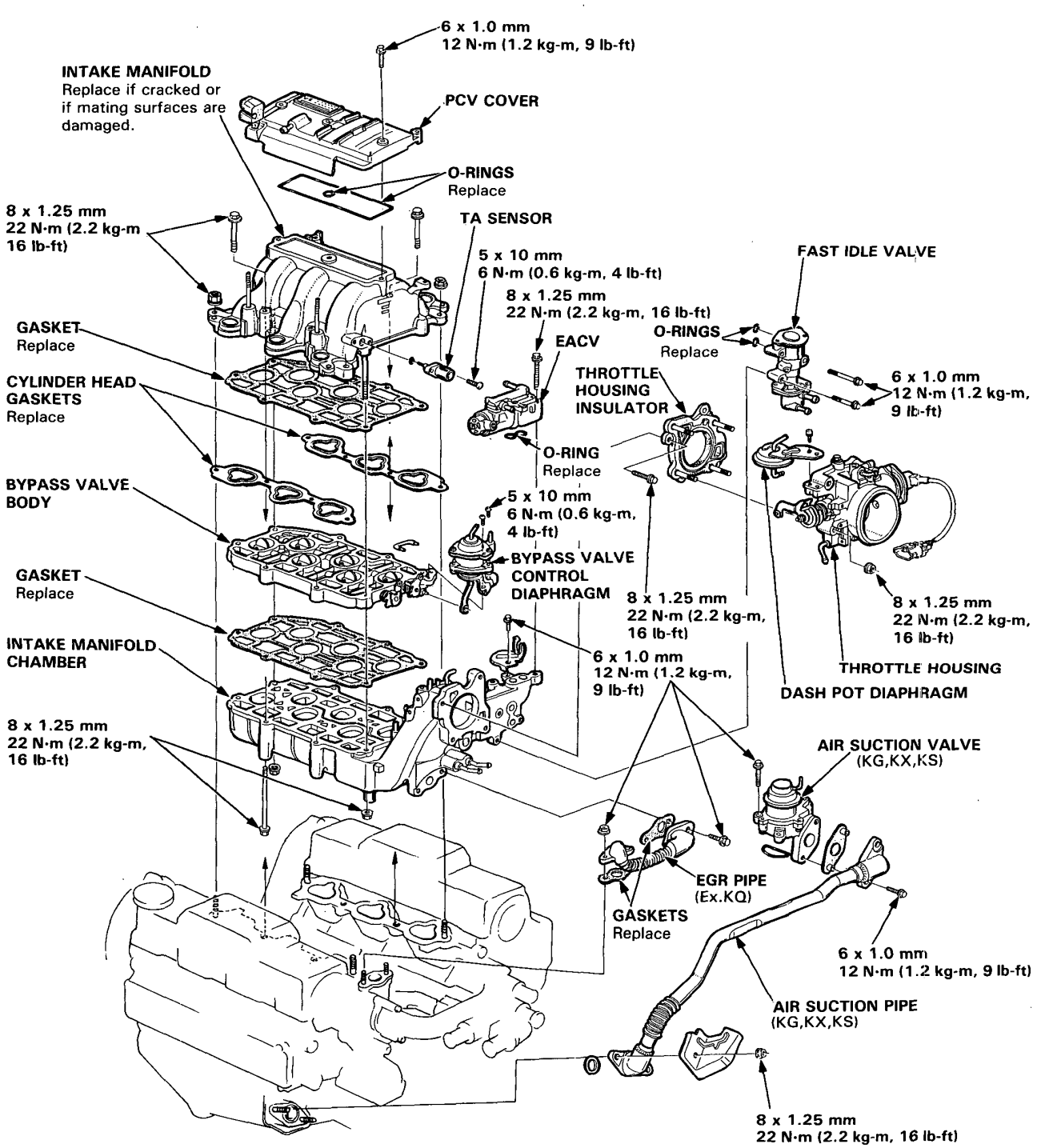

Exhaust Manifold

Illustrated Index

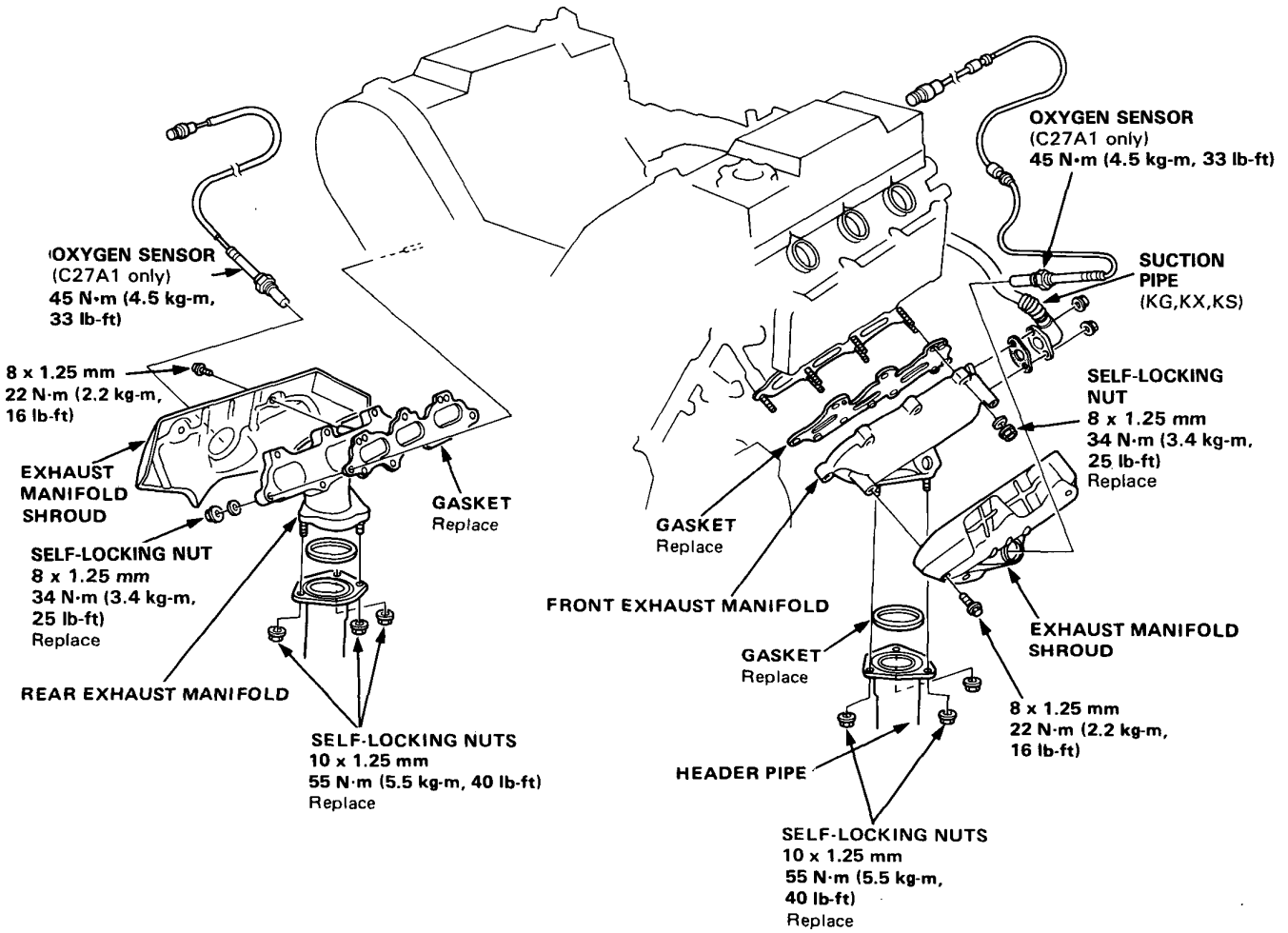

Exhaust Pipe and Muffler

Replacement (C27A1 Engine)

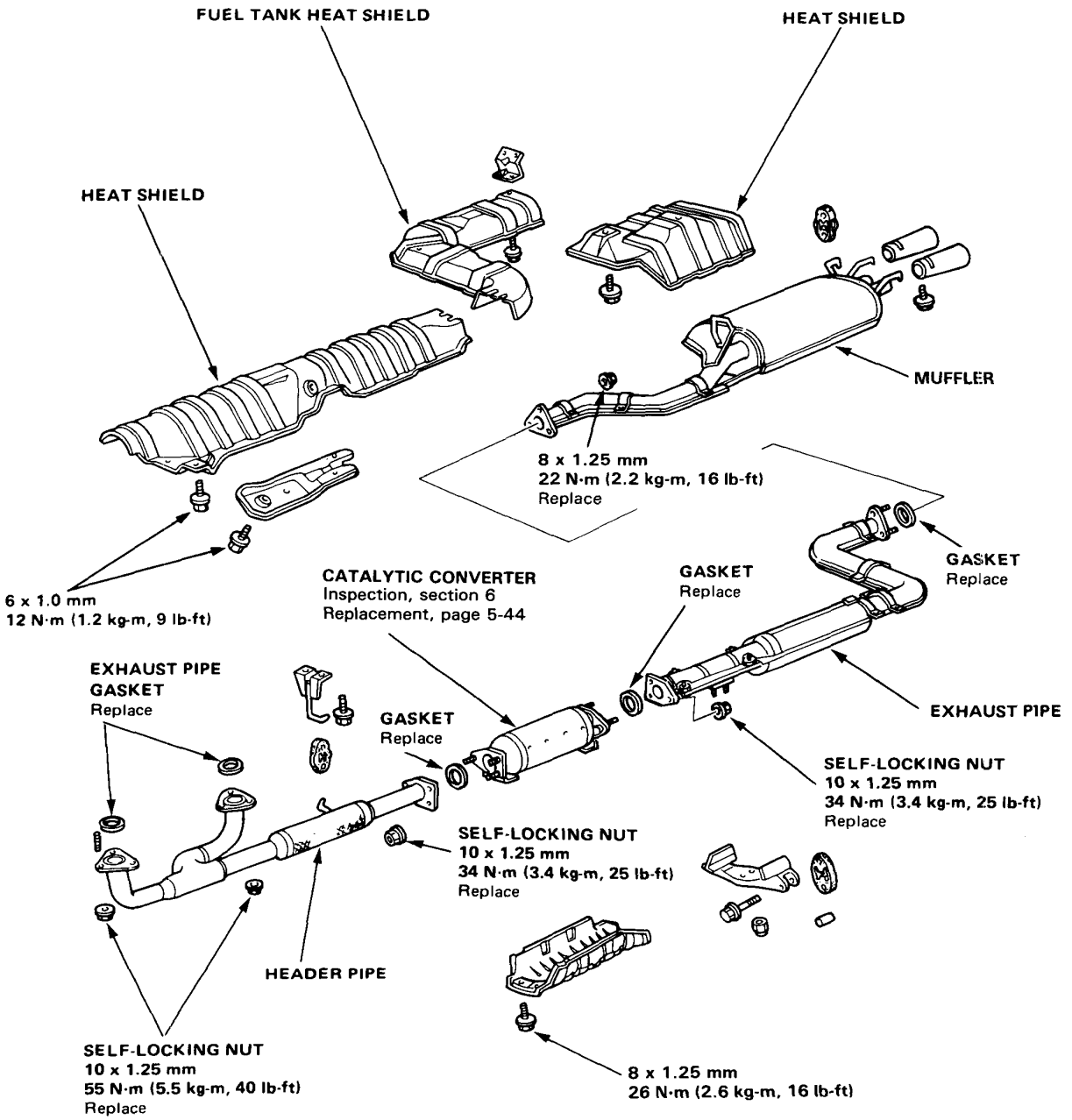

(C27A2 engine)

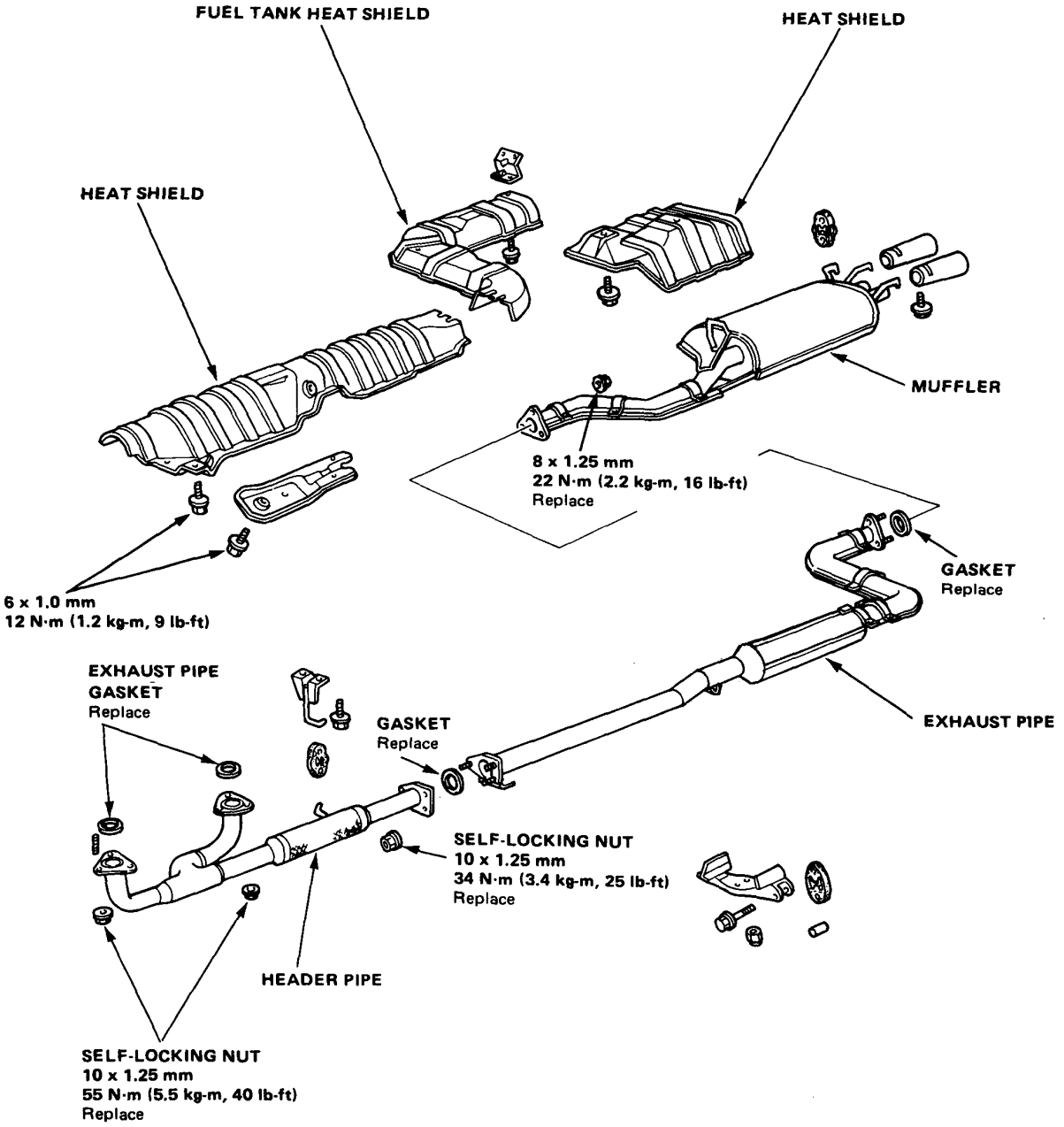

Catalytic Converter

Replacement (C27A1 only)

1. Disconnect the rubber mounts from the catalytic converter support.
2. Remove the six nuts, then remove the catalytic converter from the exhaust system.
3. Remove the converter support and heat shield.
4. Install in the reverse order of removal.

CAUTION: Torque the converter flange nuts in the sequence shown.

CATALYTIC CONVERTER TORQUE SEQUENCE

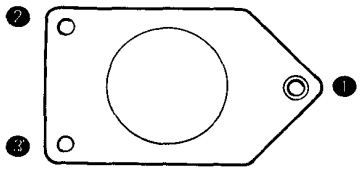

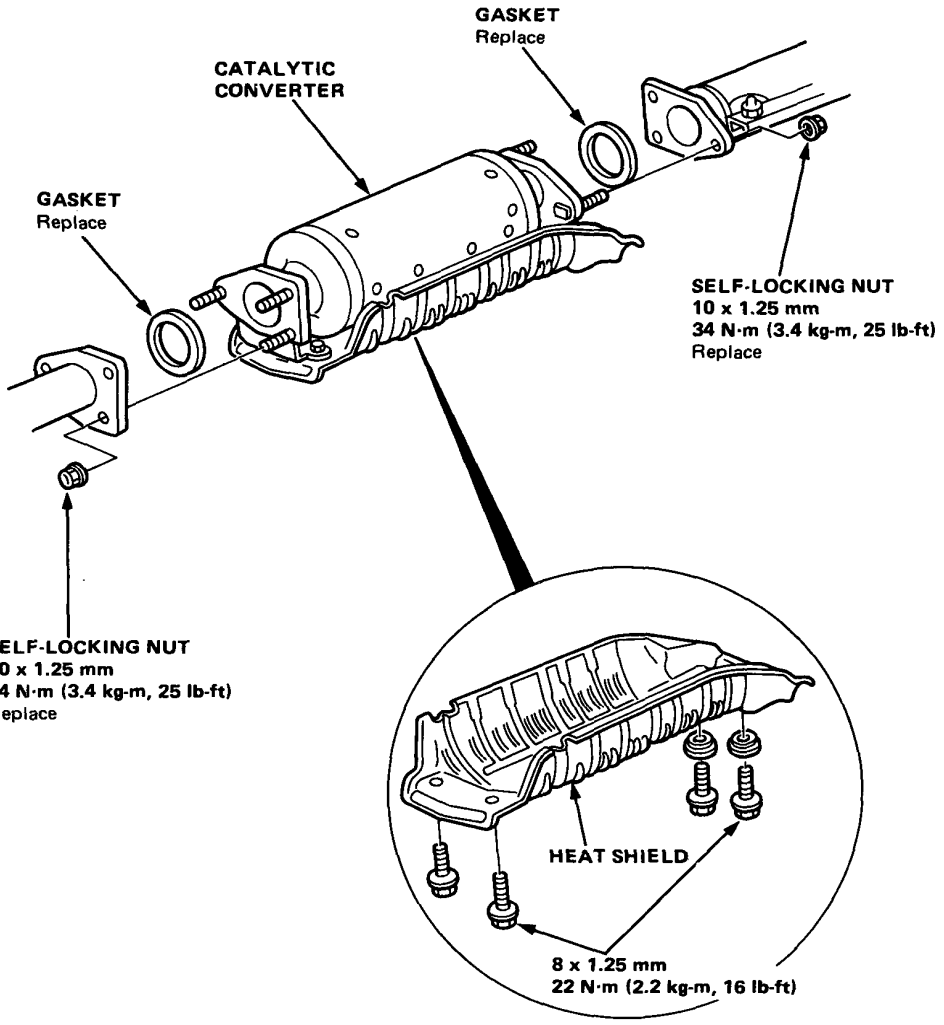

Radiator

Replacement

WARNING System is under high pressure when engine is hot. To avoid danger of releasing scalding coolant, remove cap only when engine is cool.

Total Cooling System Capacity (Incl. heater, and reservoir tank):
5 M/T: 8.8 liters (9.3 U.S. qt., 7.7 Imp. qt.)
4 A/T: 8.7 liters (9.2 U.S. qt., 7.7 Imp. qt.)

NOTE:
- Check all cooling system hoses for damage, leaks or deterioration and replace if necessary.
- Check all hose clamps and retighten if necessary.
- Use new O-rings whenever reassembling.

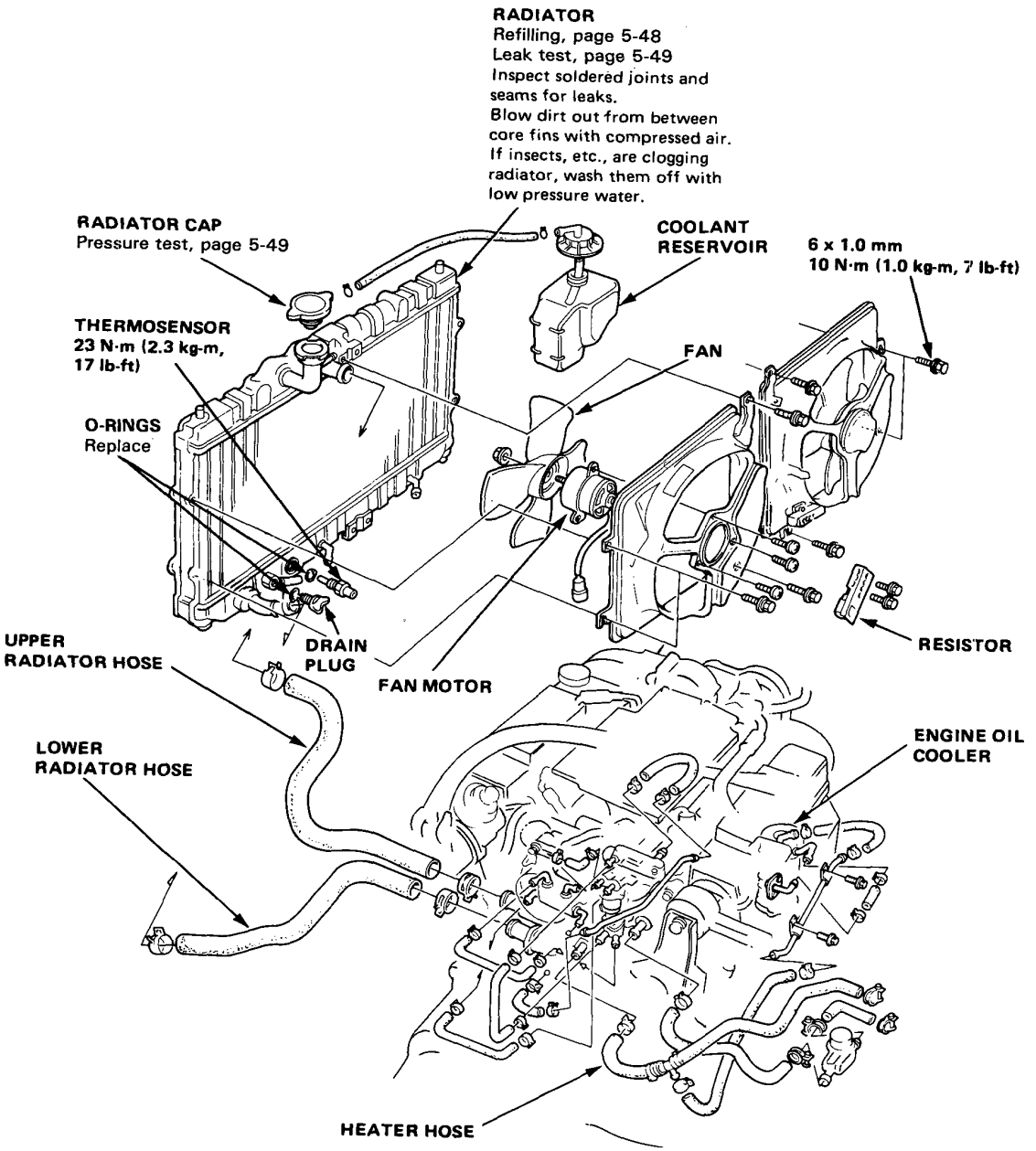

1. Disconnect the lower hose to drain the coolant.
2. Disconnect the fan motor connectors.
3. Disconnect the resistor connectors.
4. Disconnect the upper hose from the radiator.
5. Disconnect the ATF cooling hoses from radiator (A/T only).

   NOTE: Fit the blind plugs to the ATF cooling hoses to prevent ATF from bleeding.
6. Remove the front bulkhead.
7. Pull up the radiator assembly.
8. Install the radiator assembly in the reverse order of removal.

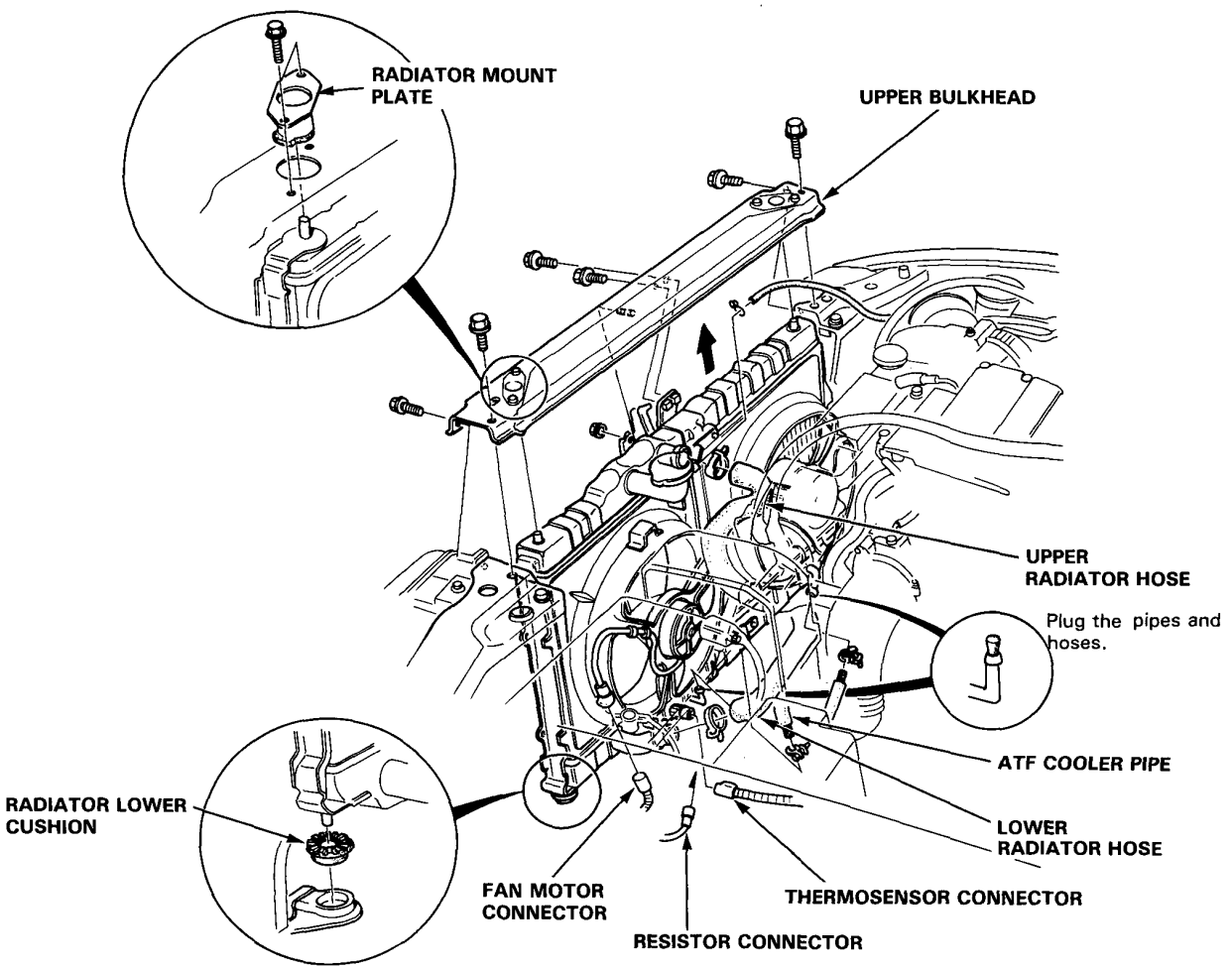

NOTE: Install the radiator in the reverse order of removal after putting the radiator lower cushion into the place.

Refilling and Bleeding

1. Set the heater temperature lever to maximum heat.

2. When the radiator is cool, remove the radiator cap and drain plug, and drain the radiator.

3. Reinstall the radiator drain plug and tighten it securely.

4. Remove, drain and reinstall the reserve tank. Fill the tank halfway to the MAX mark with water, then up to the MAX mark with coolant.

5. Mix the recommended anti-freeze with an equal amount of water, in a clean container.

   NOTE:
   - Use only HONDA RECOMMENDED anti-freeze/coolant.
   - For best corrosion protection, the coolant concentration must be maintained year-round at 50% MINIMUM. Coolant concentrations less than 50% may not provide sufficient protection against corrosion or freezing.
   - Coolant concentrations greater than 60% will impair cooling efficiency and are not recommended.

   CAUTION:
   - **Do not mix different brand anti-freeze/coolants.**
   - **Do not use additional rust inhibitors or anti-rust products; they may not be compatible with the recommended coolant.**

   Radiator Coolant Refill Capacity:
   5 M/T: 7.5 liters (7.9 U.S. qt., 6.6 Imp. qt.)
   4 A/T: 7.4 liters (7.8 U.S. qt., 6.5 Imp. qt.)

6. Loosen the air bleed bolt in the water outlet, then fill the radiator to the bottom of the filler neck with the coolant mixture. Tighten the bleed bolt as soon as coolant starts to run out in a steady stream without bubbles.

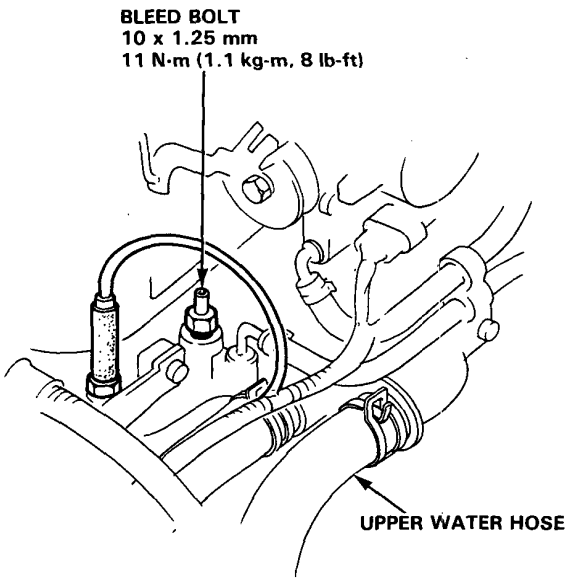

7. With the radiator cap off, start the engine and let it run until warmed up (fan goes on at least twice). Then, if necessary add more coolant mix to bring the level back up to the bottom of the filler neck.

8. Put the radiator cap on, then run the engine again and check for leaks.

Cap Testing

1. Remove the radiator cap, wet its seal with coolant, then install it on the pressure tester.
2. Apply a pressure of 88—118 kPa (0.90—1.20 kg/cm², 14—17 psi).
3. Check for a drop in pressure.

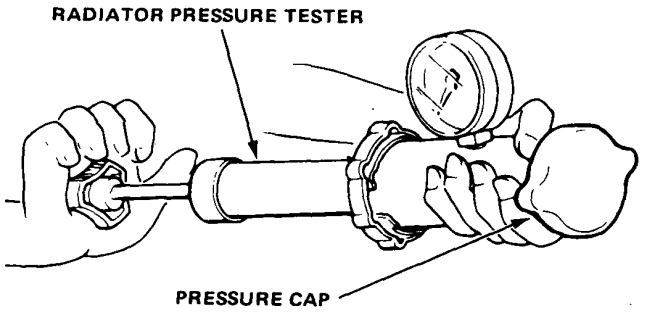

Radiator Testing

1. Wait until the engine is cool, then carefully remove the pressure cap and fill the radiator with coolant to the top of the filler neck.
2. Attach the pressure tester to the radiator and apply a pressure of 88—118 kPa (0.90—1.20 kg/cm², 14—17 psi).
3. Inspect for coolant leaks and a drop in pressure.
4. Remove the tester and reinstall the pressure cap.

   NOTE: Check for engine oil in coolant and/or coolant in engine oil.

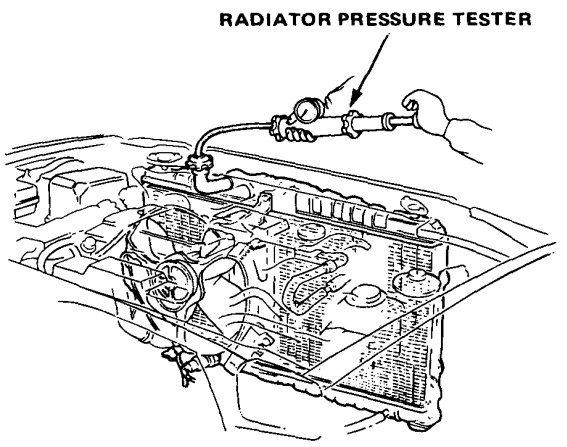

Thermostat

Replacement

NOTE: Use new gaskets and O-rings whenever reassembling.

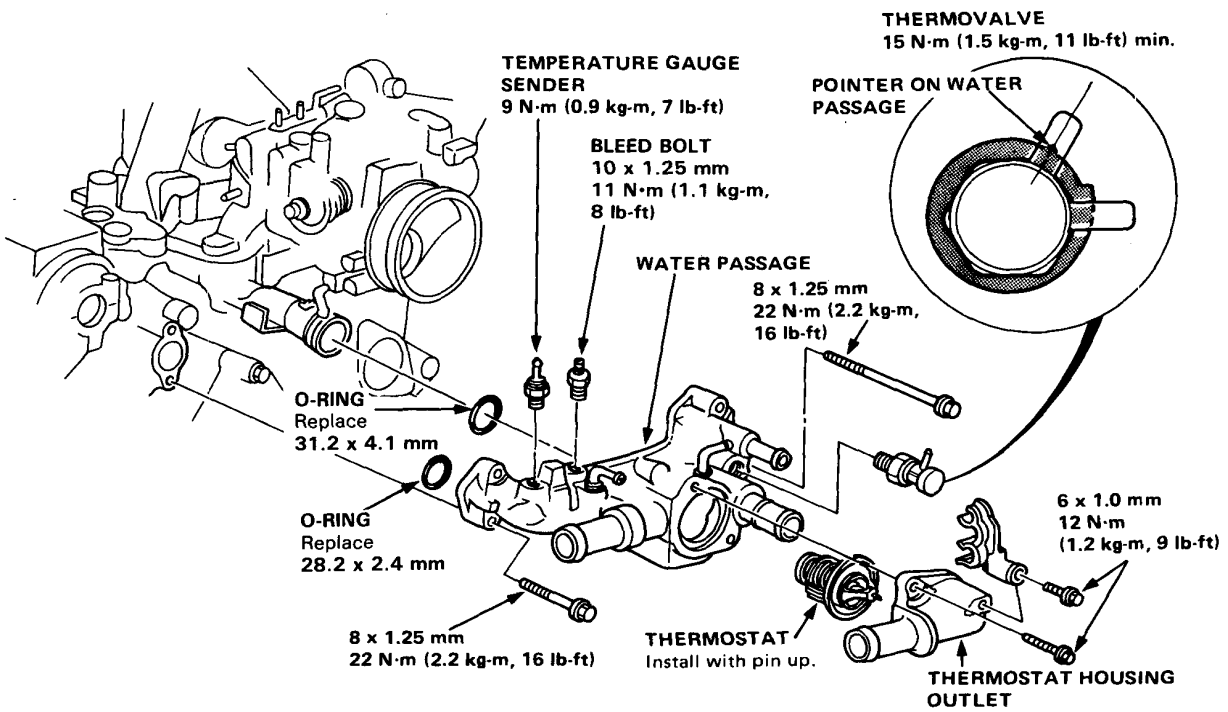

Replacement

NOTE: Use new gaskets and O-rings whenever reassembling.

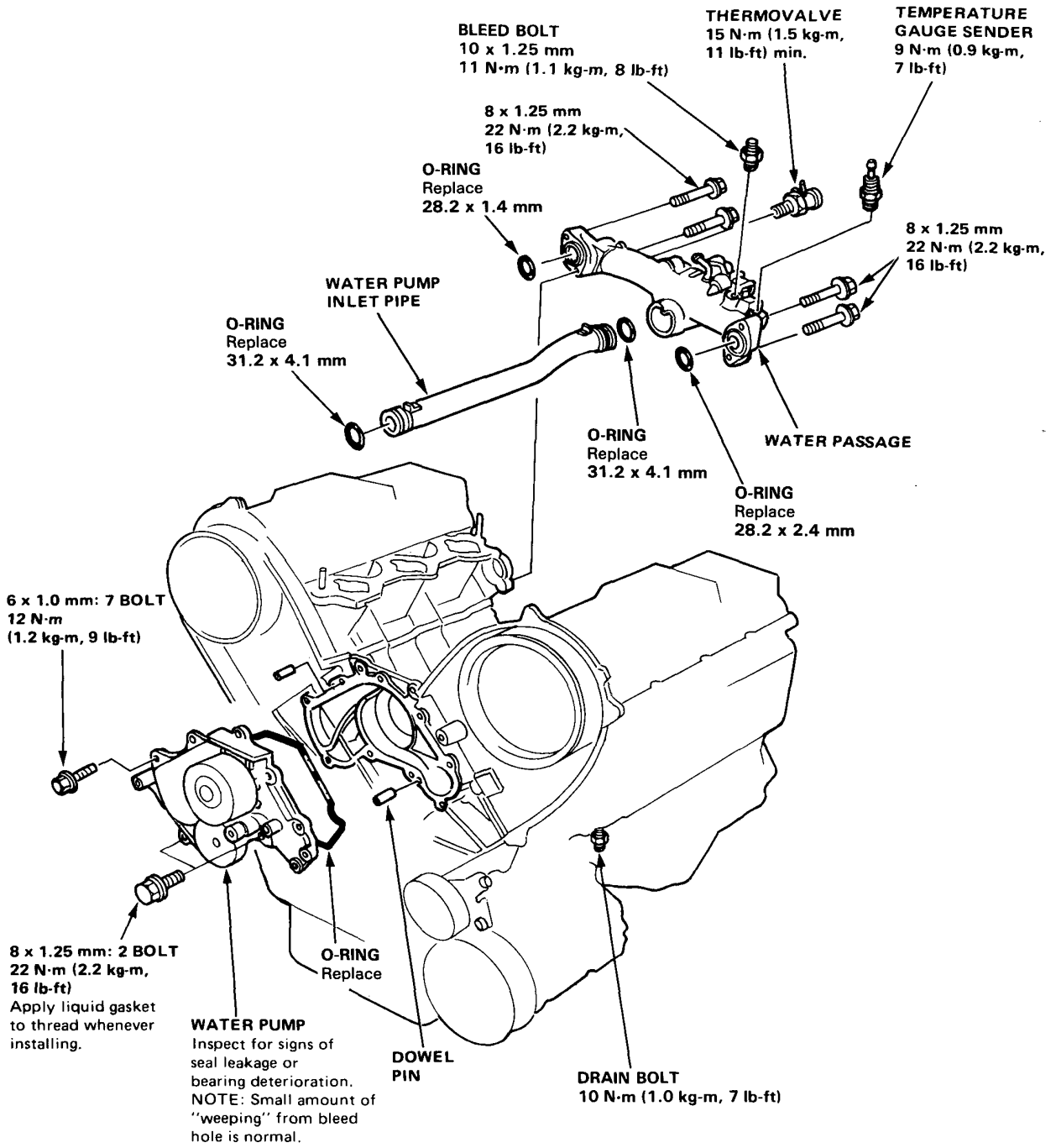

Engine Block

Illustrated Index **5-54**
Main Bearings and Rod Bearings **5-56**
Pistons and Crankshaft **5-57**
Cylinder Block **5-59**
Piston Pins **5-61**
Piston Rings **5-63**
Oil Seal **5-65**
Crankshaft Installation **5-66**

Special Tools

Ref. No.	Tool Number	Description	Q'ty	Remarks
①	07973–6570002	Piston Pin Dis/Assembly Tool Set	1	
①-1	07973–6570500	Piston Base	1	Component Tool
①-2	07973–6570600	Piston Base Spring	1	Component Tool
②	*07HAF–PL20101	Piston Base Head	1	
③	07GAF–PH70100	Pilot Collar	1	
④	07GAF–PH60300	Piston Pin Base Insert	1	
⑤	07973–PE00302	Adjustable Piston Pin Driver	1	07973–PE00301 may also be used.
⑥	07948–SB00101	Seal Driver Attachment	1	Crankshaft oil seal (clutch side)
⑦	07749–0010000	Driver	1	Crankshaft oil seal (pulley side)
⑧	07GAD–PH70200	Oil Seal Driver	1	

*New Tool

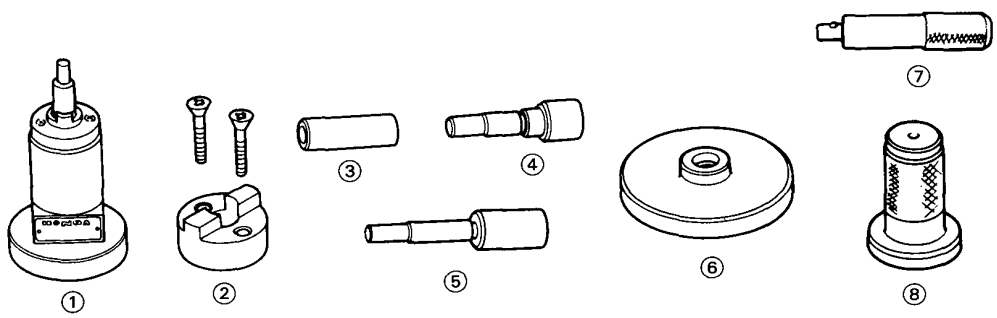

Engine Block

Illustrated Index

Lubricate all internal parts with engine oil during reassembly.

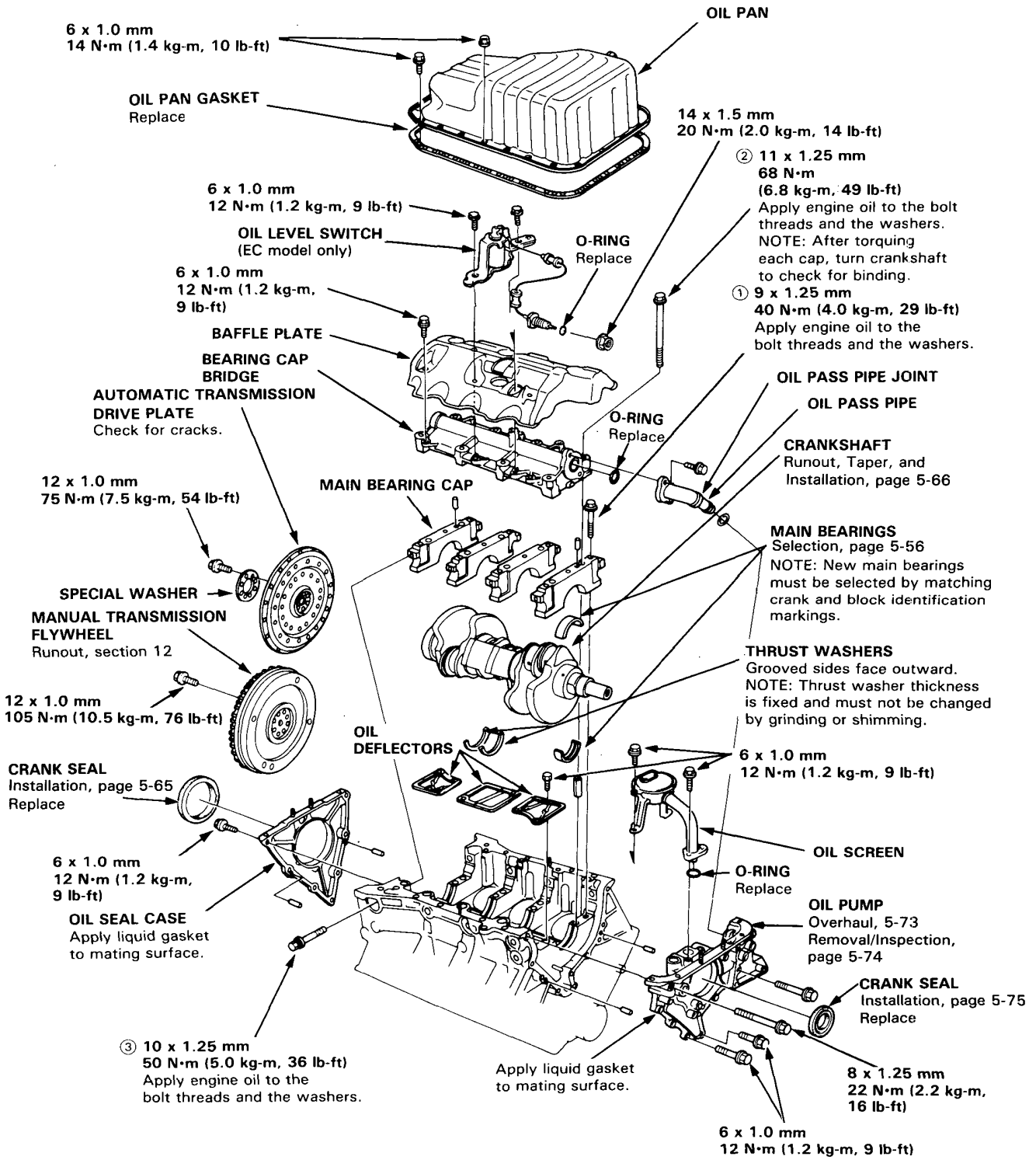

CAUTION: The piston skirt is coated with molybdenum; handle the piston carefully to prevent any damage.

NOTE: New rod bearings must be selected by matching connecting rod and crankshaft identification markings (page 5-56).

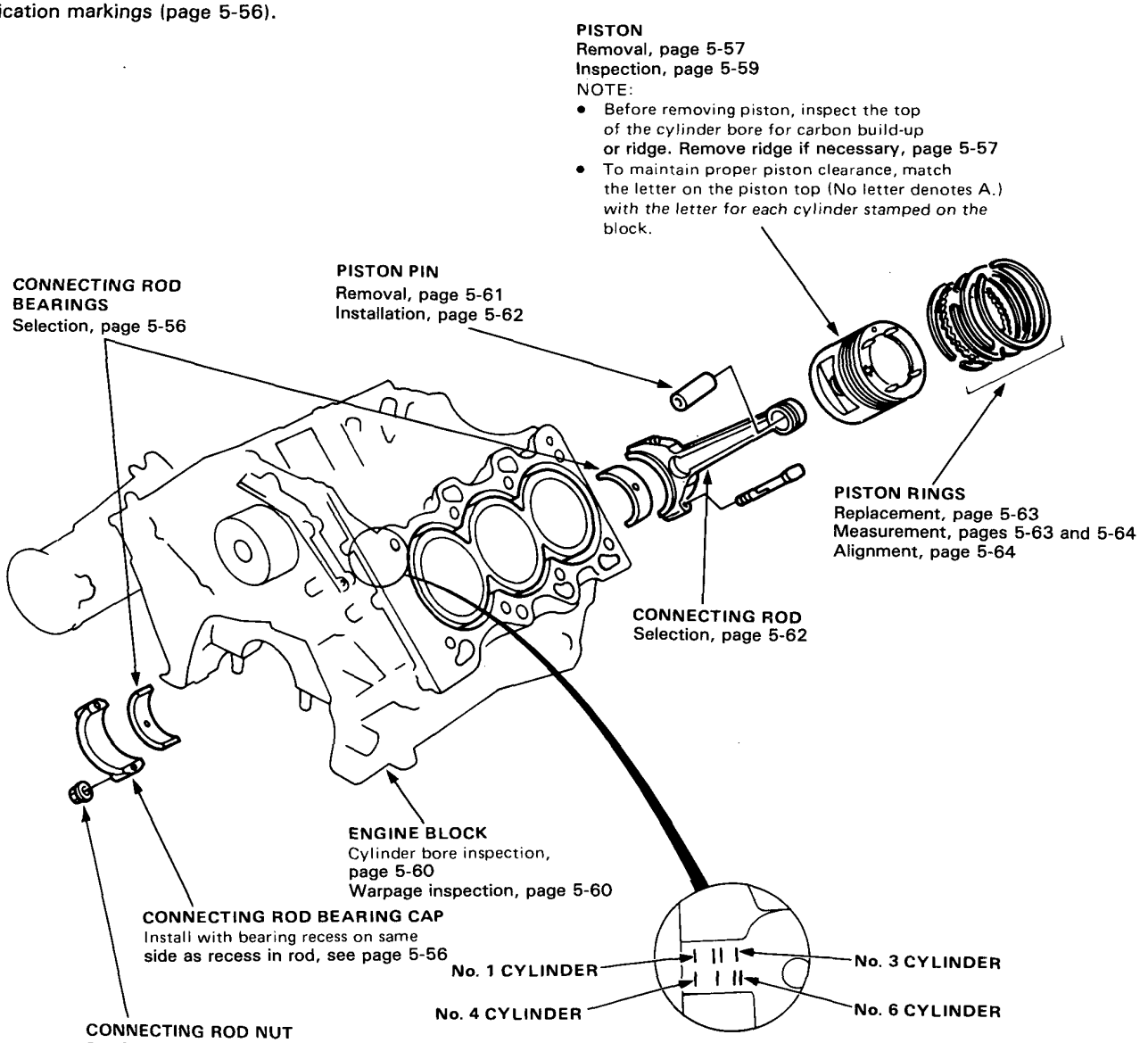

Main Bearings

Selection

Crank Bore Code Locations (Letters)

Letters have been stamped on the end of the block as a code for the size of each of the 4 main journal bores. Use them, and the numbers stamped on the crank (codes for main journal size), to choose the correct bearings.

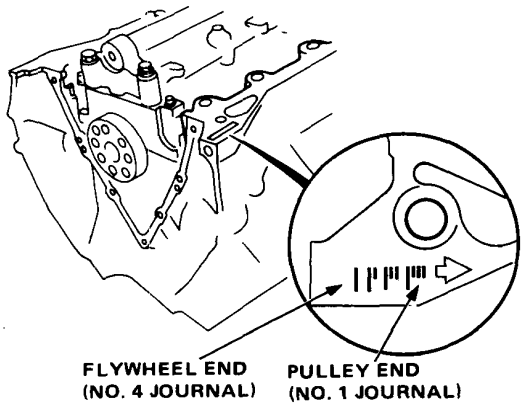

Main Journal Code Locations (Numbers)

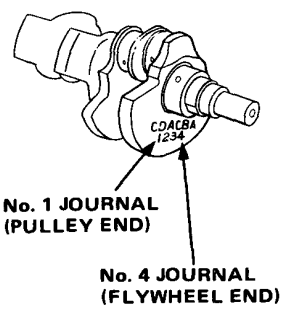

Bearing Design

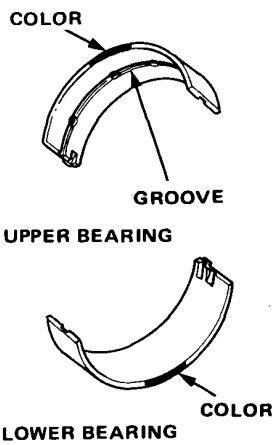

Bearing Identification

Color code is on the edge of the bearing

→ Larger crank bore

A or I	B or II	C or III	D or IIII

→ Smaller bearing (thicker)

Smaller main journal	Smaller bearing (thicker)				
1 or I	Upper Lower	Pink Pink	Pink Yellow	Yellow Yellow	Yellow Green
2 or II	Upper Lower	Pink Yellow	Yellow Yellow	Yellow Green	Green Green
3 or III	Upper Lower	Yellow Yellow	Yellow Green	Green Green	Green Brown
4 or IIII	Upper Lower	Yellow Green	Green Green	Green Brown	Brown Brown
5 or IIIII	Upper Lower	Green Green	Green Brown	Brown Brown	Brown Black
6 or IIIIII	Upper Lower	Green Brown	Brown Brown	Brown Black	Black Black

Rod Bearings

Selection

Rod Code Location (Numbers)

Numbers have been stamped on the side of each connecting rod as a code for the size of the big end. Use them, and the letters stamped on the crank (codes for rod journal size), to choose the correct bearings.

Half of number is stamped on bearing cap and the other half is stamped on rod.

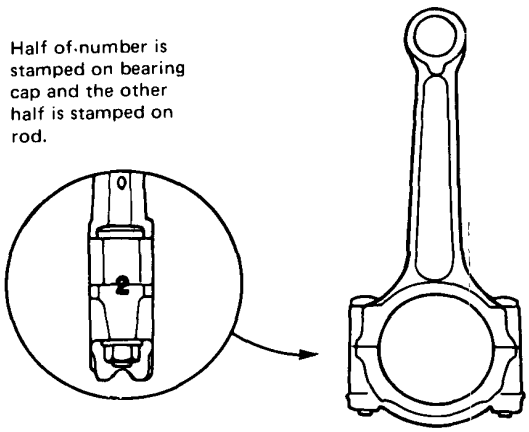

Rod Journal Code Locations (Letters)

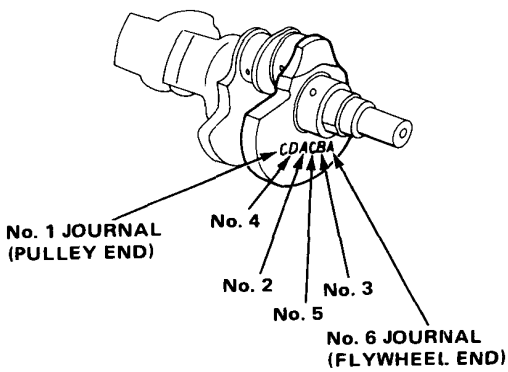

Bearing Identification

Color code is on the edge of the bearing

→ Larger big end bore

1 or I	2 or II	3 or III	4 or IIII

→ Smaller bearing (thicker)

Smaller rod journal	Smaller bearing (thicker)			
A or I	Pink Pink	Pink Yellow	Yellow Yellow	Yellow Green
B or II	Pink Yellow	Yellow Yellow	Yellow Green	Green Green
C or III	Yellow Yellow	Yellow Green	Green Green	Green Brown
D or IIII	Yellow Green	Green Green	Green Brown	Brown Brown
E or IIIII	Green Green	Green Brown	Brown Brown	Brown Black
F or IIIIII	Green Brown	Brown Brown	Brown Black	Black Black

Removal

1. Remove the L. side cover.

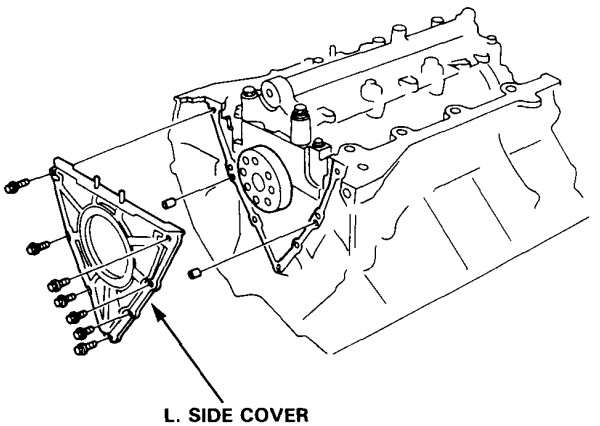

2. Remove the oil screen and remove the oil level switch (EC model only).

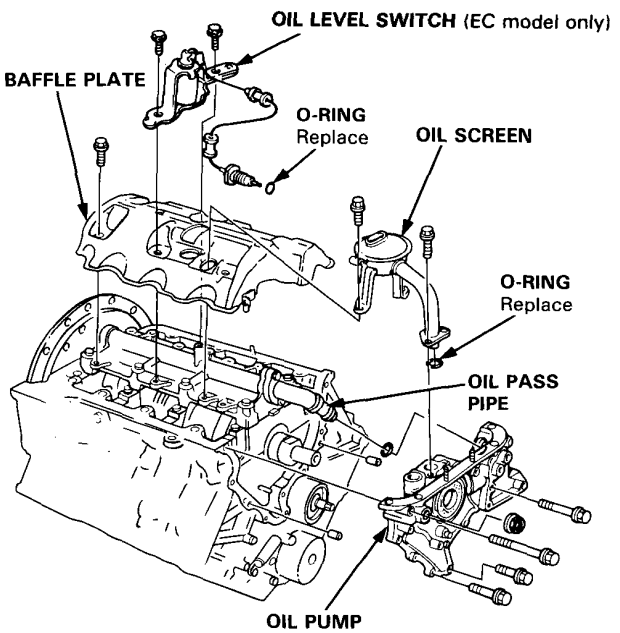

3. Remove the baffle plate.
4. Remove the oil pass pipe and joint.
5. Remove the oil pump.
6. If you can feel a ridge of metal or hard carbon around the top of each cylinder, remove it with a ridge reamer. Follow reamer manufacturer's instructions.

CAUTION: If the ridge is not removed, it may damage the pistons as they are pushed out.

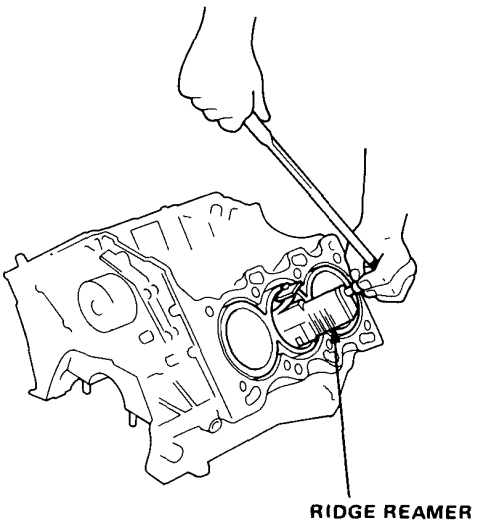

7. Remove the bearing cap bridge.

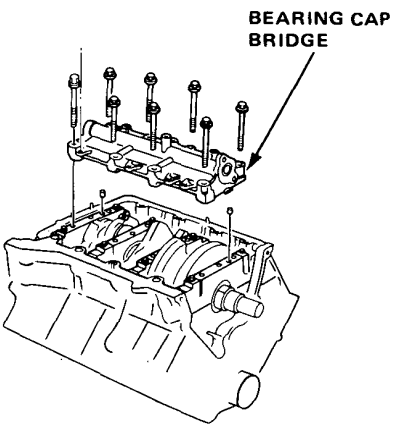

(cont'd)

Removal (cont'd)

- Remove the connecting rod caps after setting the crank pin at the BDC for each cylinder. Remove the piston assembly by pushing on the connecting rod.

CAUTION: Take care not to damage the crank pin or cylinder with the connecting rod.

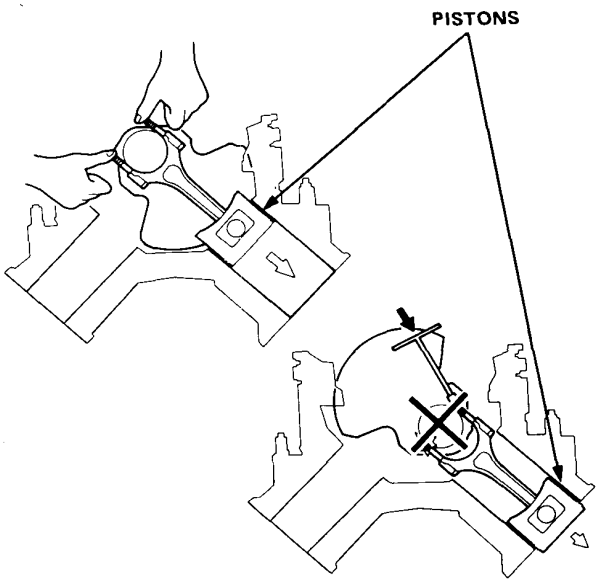

8. Remove the rod cap/bearing. Keep all caps/bearings in order.
9. Remove upper bearing halves from connecting rods and set aside with their respective caps.
10. Reinstall the rod bearings and caps after removing each piston/connecting rod assembly.
11. Mark piston/connecting rod assemblies with cylinder numbers to avoid mixup on reassembly.

    NOTE: The existing number on the connecting rod does not indicate its position in the engine, it indicates the rod bore size.

12. Remove the bearing cap bolts and bearing cap side bolts, then remove the bearing caps.

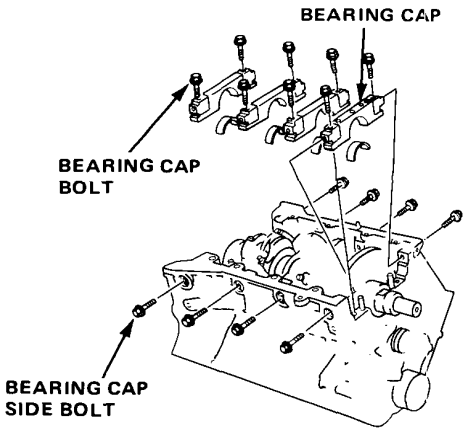

- Install the bearing cap bridge bolts on the bearing cap bolt holes.

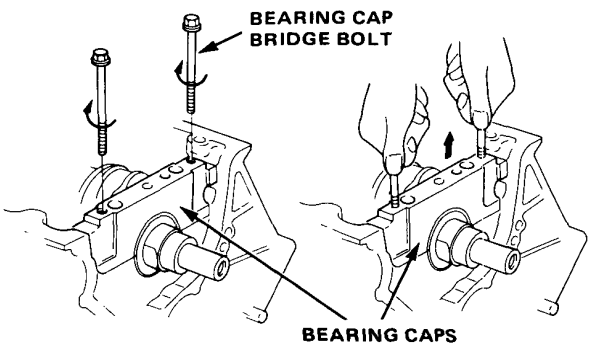

13. Lift the crankshaft out of engine, being careful not to damage journals.

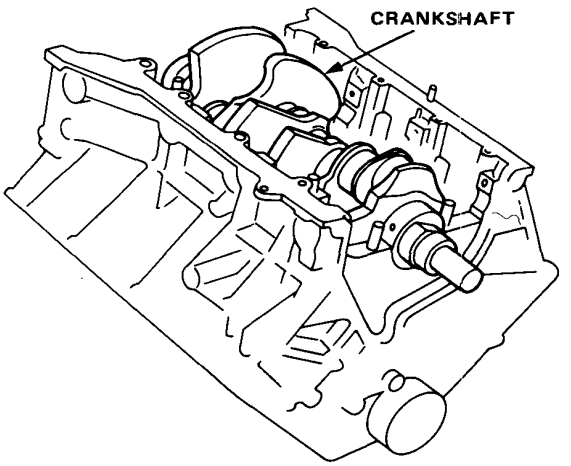

14. Reinstall main cap and bearings on engine in proper order.

Cylinder Block

Piston-to-Block Clearance

1. Make a preliminary piston-to-block clearance check with a feeler gauge:

   Service Limit: 0.08 mm (0.003 in.)

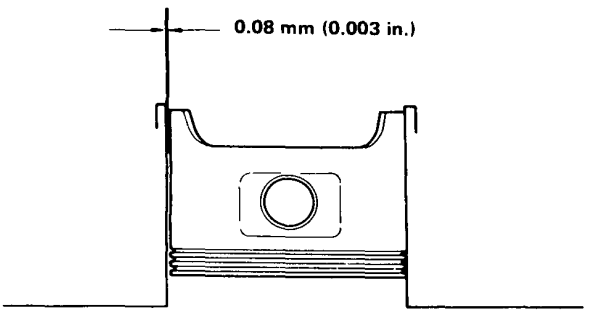

   If the clearance is near or exceeds the service limit, inspect the piston and cylinder block for excessive wear.
   To confirm the feeler gauge check, further measurement with a micrometer will be necessary.

2. Calculate difference between cylinder bore diameter on page 5-60 and piston diameter.

   Piston-to-Cylinder Clearance:
   Standard (New): 0.016–0.039 mm (0.0006–0.0015 in.)
   Service Limit: 0.08 mm (0.003 in.)

Pistons

Inspection

1. Check the piston for distortion or cracks.

   NOTE: If cylinder is bored, an oversized piston must be used.

2. Measure piston diameter at a point 18 mm (0.71 in.) from bottom of skirt.

   NOTE: There are two standard-size pistons (A and B). The letter is stamped on the top of the piston. These letters are also stamped on the block as cylinder bore sizes.

   Piston A Diameter
   Standard (New): 86.981–86.994 mm (3.4244–3.4250 in.)
   Service Limit: 86.97 mm (3.4634 in.)
   Piston B Diameter
   Standard (New): 86.971–86.984 mm (3.4240–3.4246 in.)
   Service Limit: 86.96 mm (3.4236 in.)

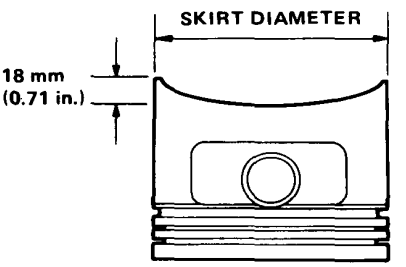

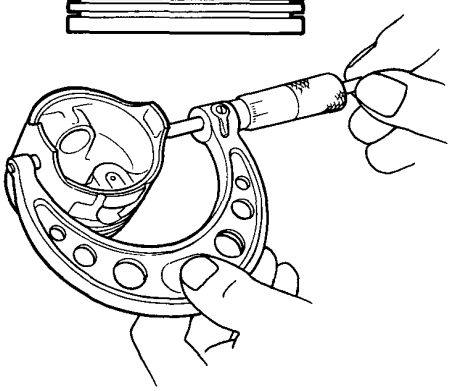

   Oversize Piston Diameter
   0.25: 87.22–87.23 mm (3.4339–3.4342 in.)
   0.50: 87.47–87.48 mm (3.4437–3.4441 in.)

3. Check the piston pin-to-piston clearance. Coat the piston pin with engine oil.
   It should then be possible to push the piston pin into the piston hole with thumb pressure.

   Piston Pin-to-Piston Clearance:
   Service limit: 0.012–0.024 mm (0.0005–0.0009 in.)

Cylinder Block

Inspection

1. Measure wear and taper in directions X and Y at three levels in each cylinder as shown.

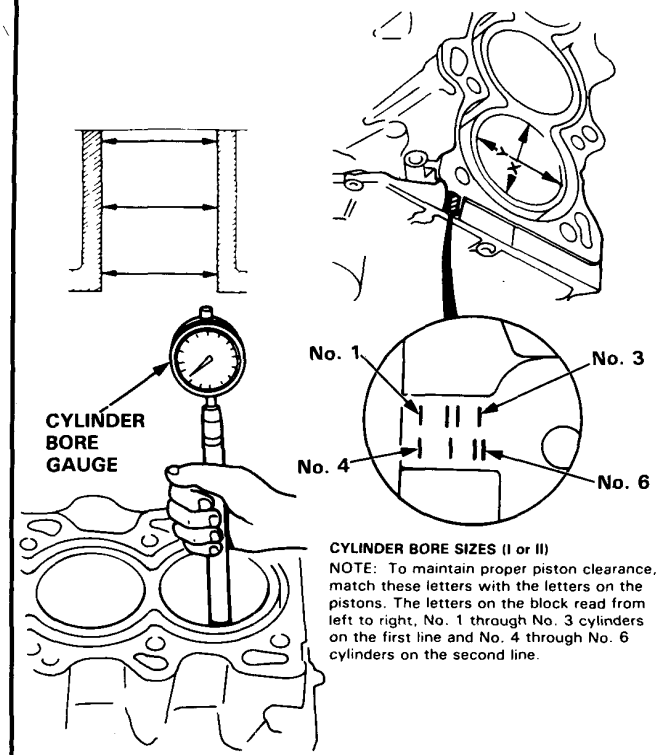

CYLINDER BORE SIZES (I or II)
NOTE: To maintain proper piston clearance, match these letters with the letters on the pistons. The letters on the block read from left to right, No. 1 through No. 3 cylinders on the first line and No. 4 through No. 6 cylinders on the second line.

Cylinder Bore Size
Standard (New): 87.00–87.02 mm (3.4252–3.4260 in.)
Service Limit: 87.07 mm (3.4279 in.)

Oversize
0.25 : 87.25–87.27 mm (3.4350–3.4358 in.)
0.50 : 87.50–87.52 mm (3.4449–3.4457 in.)

Bore Taper
Limit: (Difference between first and third measurement) 0.05 mm (0.002 in.)

- If measurements in any cylinder are beyond Oversize Bore Service Limit, replace the block.
- If block is to be rebored, refer to Piston Clearance Inspection (page 5-59) after reboring.

NOTE: Scored or scratched cylinder bores must be honed.

Out-of-Round
Service Limit: 0.05 mm (0.002 in.)

2. Check the top of the block for warpage. Measure along the edges and across the center as shown.

SURFACES TO BE MEASURED

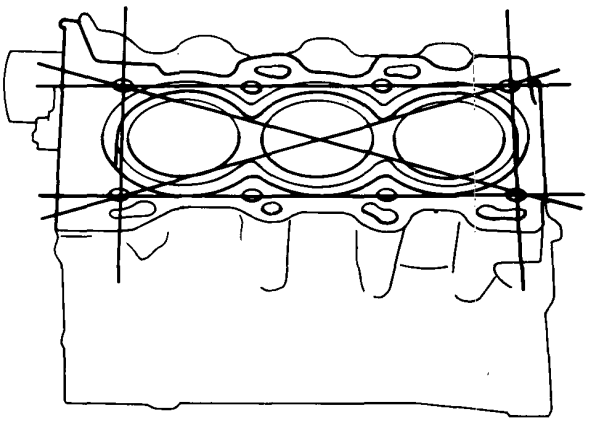

Engine Block Warpage:
Standard (New): 0.07 mm (0.003 in.)
Service Limit: 0.10 mm (0.004 in.)

PRECISION STRAIGHT EDGE

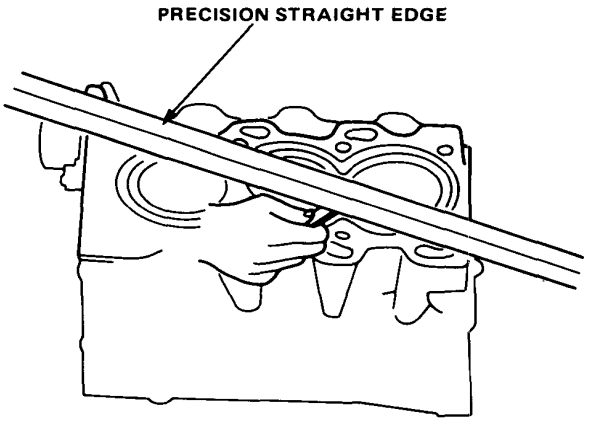

Bore Honing

1. Measure cylinder bores as shown on page 5-60. If the block is to be re-used, hone the cylinders and remeasure the bores.

2. Hone cylinder bores with honing oil and a fine (400 grit) stone in a 60 degree cross-hatch pattern.

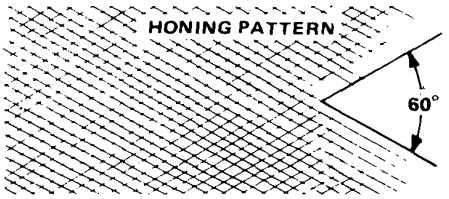

3. When honing is complete, thoroughly clean the engine block of all metal particles. Wash the cylinder bores with hot soapy water, then dry and oil immediately to prevent rusting.

4. If Scoring or scratches are still present in cylinder bores after honing to service limit, rebore the engine block.

   NOTE: Some light vertical scoring and scratching *is acceptable if it is not deep enough to catch your* fingernail and does not run the full length of the bore.

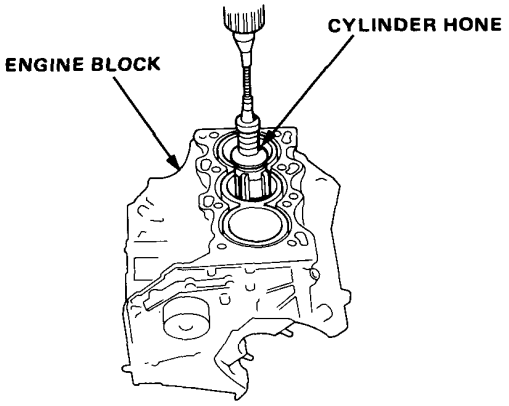

NOTE:
- After honing, clean the cylinder thoroughly with soapy water.
- Only scored or scratched cylinder bores must be honed.

Removal

1. Assemble the Piston Pin Dis/assembly Tool as shown.

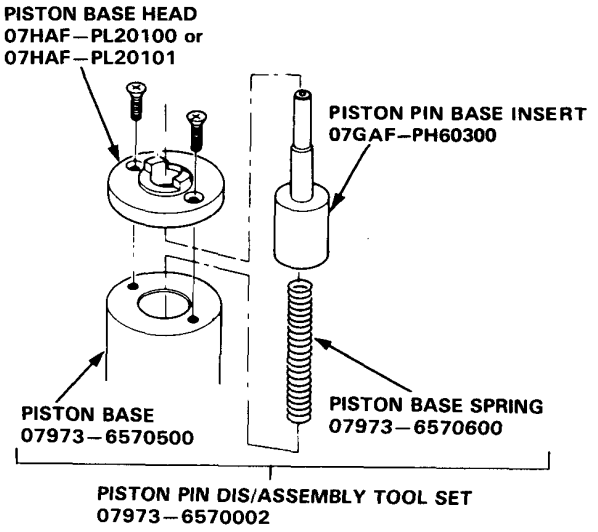

2. Adjust the length of piston pin driver to 51.5 mm (2.03 in.) as shown.

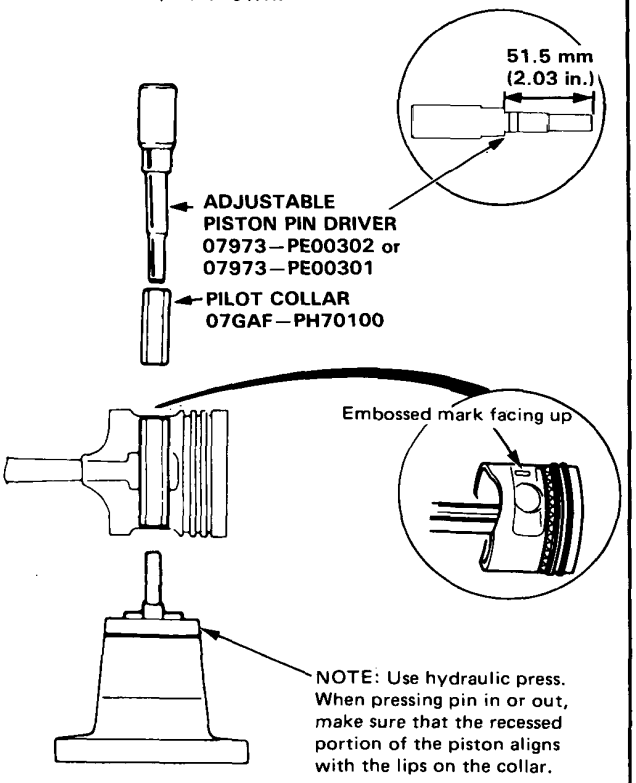

3. Place the piston on the piston base and press the pin out with a hydraulic press.

Bore Honing

1. Measure cylinder bores as shown on page 5-60. If the block is to be re-used, hone the cylinders and remeasure the bores.

2. Hone cylinder bores with honing oil and a fine (400 grit) stone in a 60 degree cross-hatch pattern.

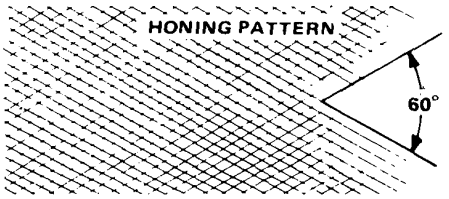

3. When honing is complete, thoroughly clean the engine block of all metal particles. Wash the cylinder bores with hot soapy water, then dry and oil immediately to prevent rusting.

4. If Scoring or scratches are still present in cylinder bores after honing to service limit, rebore the engine block.

   NOTE: Some light vertical scoring and scratching *is acceptable if it is not deep enough to catch your* fingernail and does not run the full length of the bore.

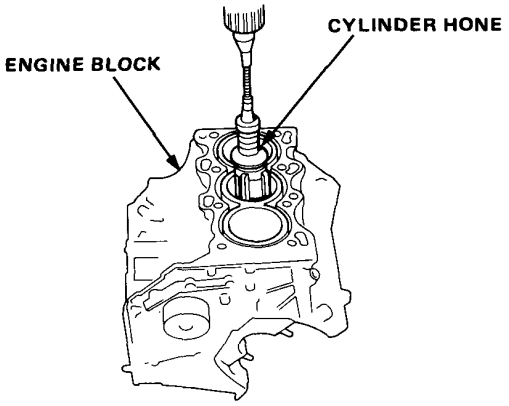

NOTE:
- After honing, clean the cylinder thoroughly with soapy water.
- Only scored or scratched cylinder bores must be honed.

Removal

1. Assemble the Piston Pin Dis/assembly Tool as shown.

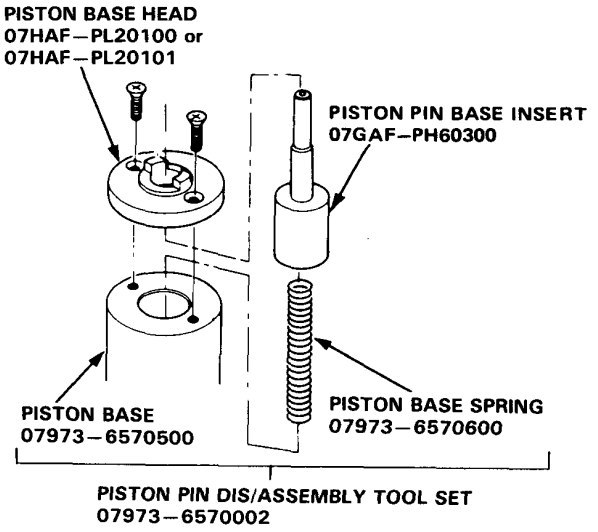

2. Adjust the length of piston pin driver to 51.5 mm (2.03 in.) as shown.

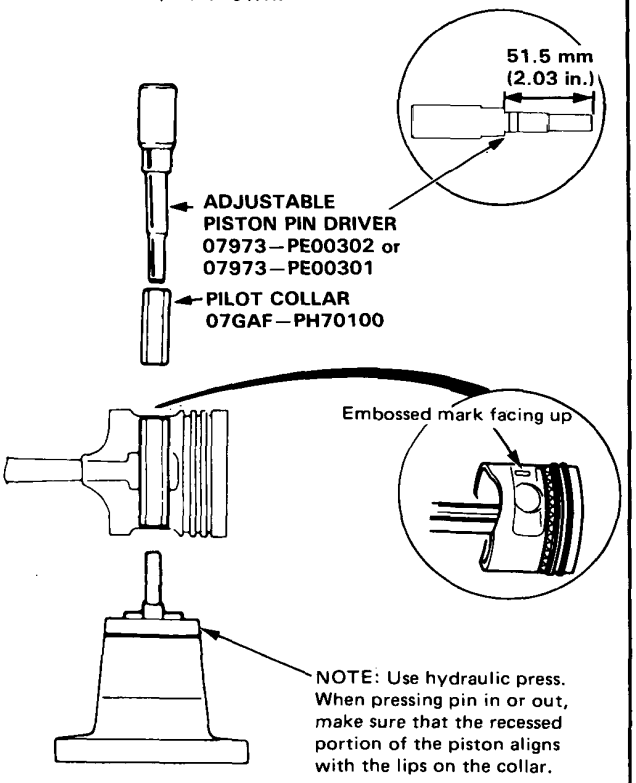

3. Place the piston on the piston base and press the pin out with a hydraulic press.

Connecting Rods

Selection

Each rod is sorted into one of four tolerance ranges (from 0 to 0.024 mm, in 0.006 mm increments) depending on the size of its big end bore. It's then stamped with a number (1, 2, 3, 4, 5 or 6) indicating that tolerance. You may find any combination of 1, 2, 3, 4, 5 or 6, in any engine.

Normal Bore Size: 55 mm (2.17 in.)

NOTE:
- Reference numbers are for big end bore size and do NOT indicate the position of rod in engine.
- Inspect connecting rod for cracks and heat damage.

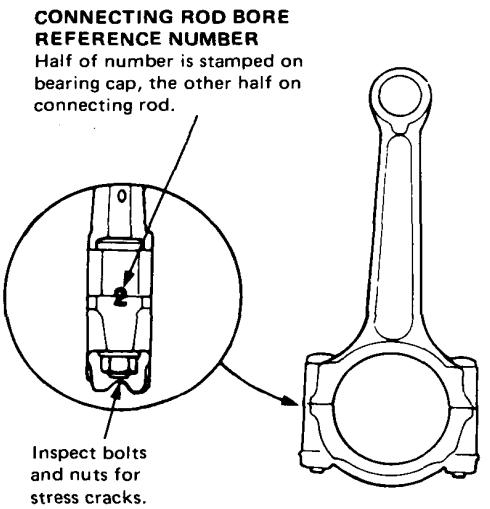

Piston Pins

Installation

1. Use a hydraulic press for installation.
   - When pressing pin in or out, be sure you position the recessed flat on the piston against the lugs on the base attachment.

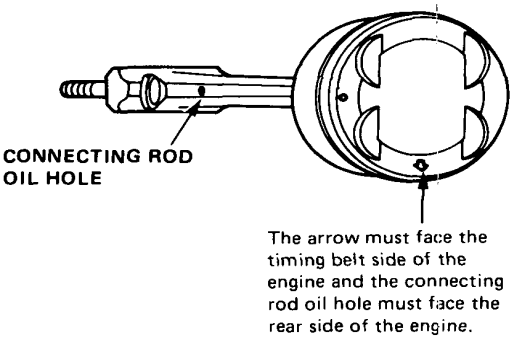

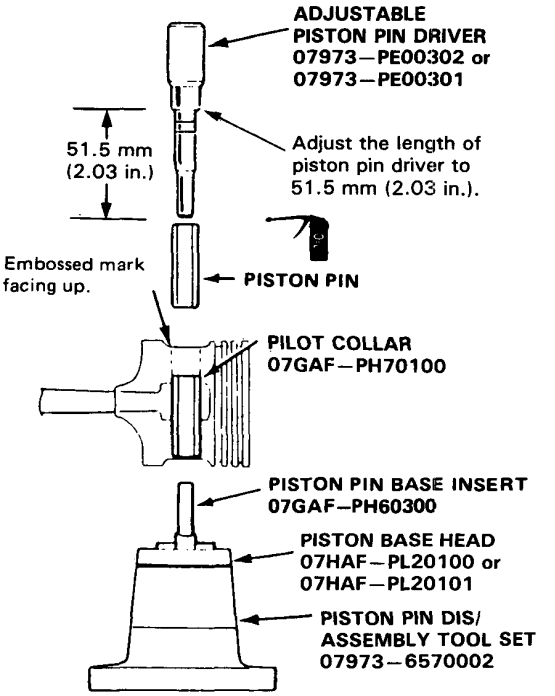

NOTE: Install the assembled piston and rod with the oil hole facing the rear of the engine.

Piston Rings

End Gap

1. Using a piston, push a new ring into the cylinder bore 15–20 mm (0.6–0.8 in.) from the bottom.

2. Measure the piston ring end-gap with a feeler gauge:

   - If the gap is too small, check to see if you have the proper rings for your engine.

   - If the gap is too large, re-check the cylinder bore diameter against the wear limits on page 5-59. If the bore is over limit, the engine block must be rebored.

Piston Ring End-Gap:

Top Ring
Standard (New): 0.20–0.35 mm (0.008–0.014 in.)
Service Limit: 0.60 mm (0.02 in.)

Second Ring
Standard (New): 0.35–0.50 mm (0.014–0.020 in.)
Service Limit: 0.75 mm (0.03 in.)

Oil Ring
Standard (New): 0.2–0.7 mm (0.008–0.028 in.)
Service Limit: 0.8 mm (0.03 in.)

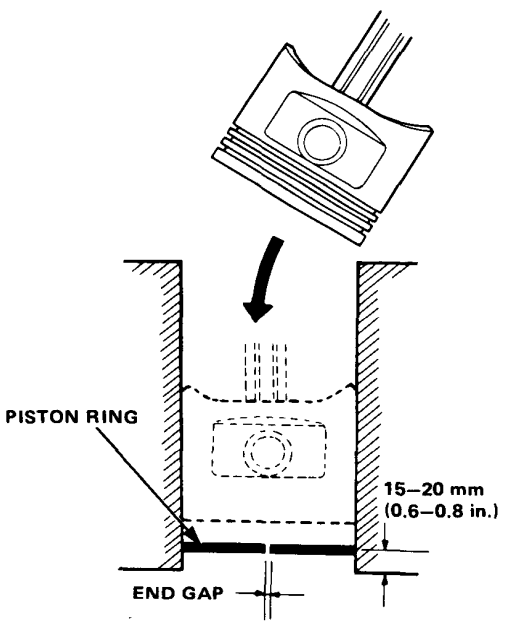

Replacement

1. Using ring expander, remove old piston rings.

2. Clean all ring grooves thoroughly.

   NOTE: Use squared-off broken ring, or file down blade on ring groove cleaner to fit (compression rings are 1.2 mm wide; oil ring is 4.0 mm wide).

   CAUTION: Do not use a wire brush to clean ring lands, or cut ring lands deeper with cleaning tool.

   NOTE: If piston is to be separated from connecting rod, do not install new rings yet.

3. Install new rings in proper sequence and position (page 5-64).

   NOTE: Do not re-use old piston rings.

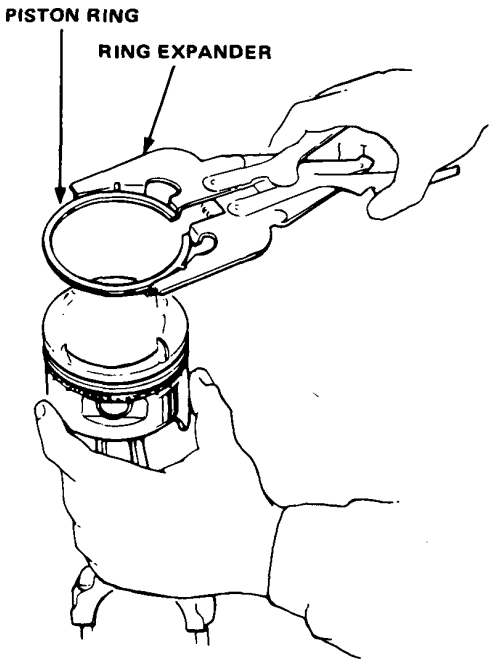

Piston Rings

Land Clearances

After installing a new set of rings, measure ring-to-land clearances:

Top and Second Rings Clearance
Standard (New): 0.015–0.045 mm (0.0006–0.0018 in.)
Service Limit: 0.13 mm (0.005 in.)

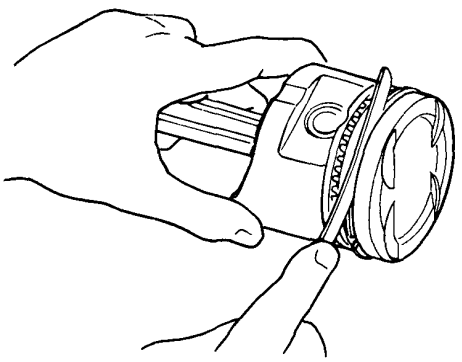

Alignment

1. Install the rings as shown on page 5-63.

   Identify top and second rings by the chamfer on the edge, and make sure they are in proper grooves on piston.

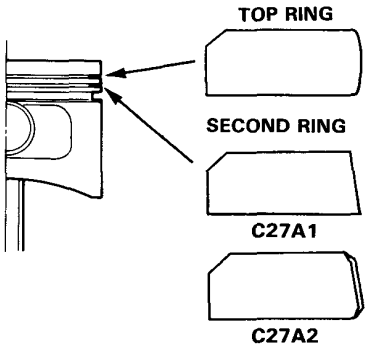

2. Rotate the rings in grooves to make sure they do not bind.
3. The manufacturing marks must be facing upward.

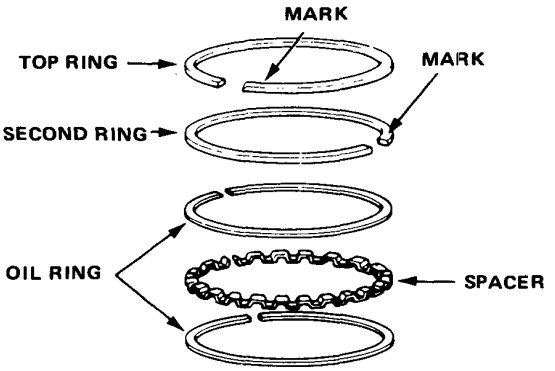

4. Position the ring end gaps as shown:

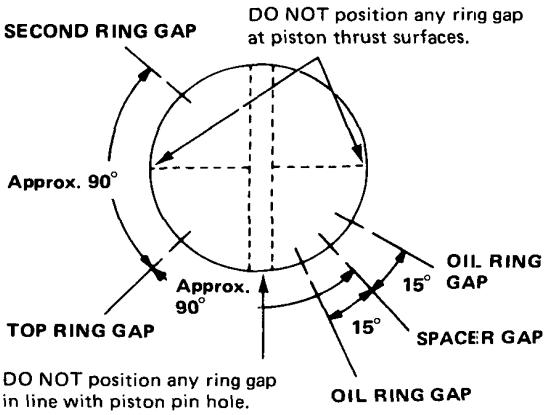

Pistons

Installation

Before installing the piston, apply a coat of engine oil to the ring grooves and cylinder bores.

1. If the crankshaft is already installed:
   - Remove the connecting rod caps, then slip short sections of rubber hose over the threaded ends of the connecting rod bolts.
   - Install the ring compressor, check that the bearing is securely in place, then position the piston in the cylinder and drive it in using the wooden handle of a hammer.
     Stop after the ring compressor pops free and check the connecting rod-to-crank journal alignment before driving rod into place.
   - Install the rod caps with bearings, and torque the nuts to 45 N•m (4.5 kg-m, 33 lb-ft).
2. If the crankshaft is not installed:
   - Remove the rod caps and bearings, install the ring compressor, then position the piston in the cylinder and drive it in using the wooden handle of a hammer.

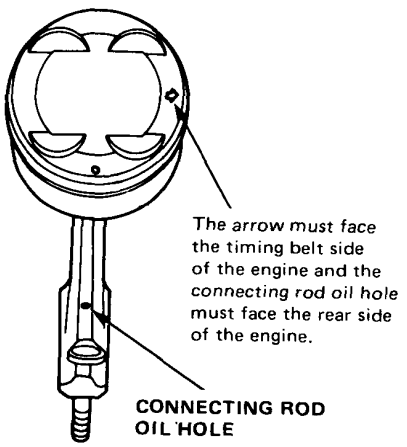

NOTE: Maintain downward force on ring compressor to prevent rings from expanding before entering the cylinder bore.

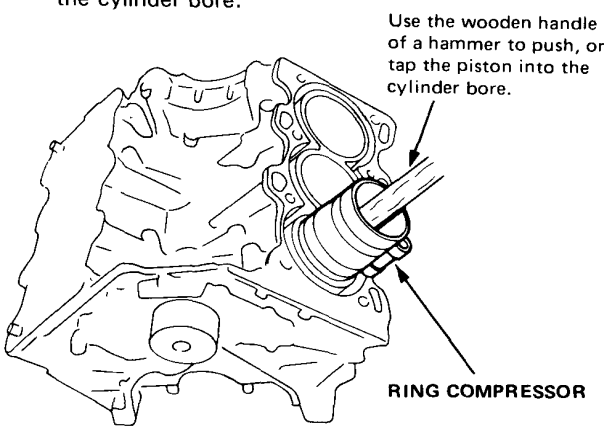

Oil Seal

Installation

The seal surface on the block should be dry. Apply a light coat of oil to the crankshaft and to the lip of seal.

1. Drive in flywheel end seal against L. side cover.
   NOTE: Drive in flywheel end seal squarely.

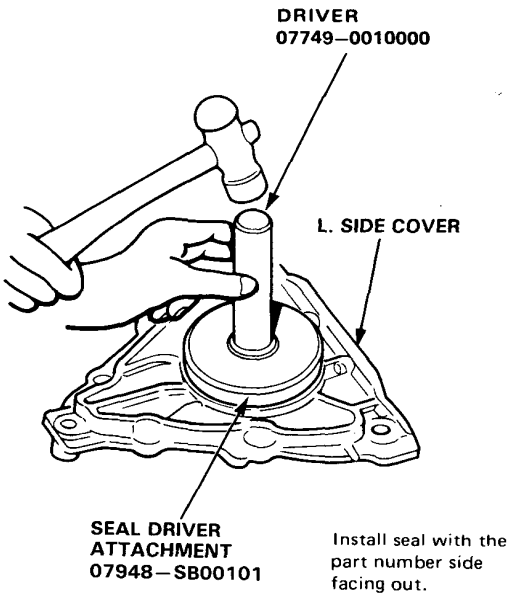

2. Confirm clearance is equal all the way around, with a feeler gauge.

   Clearance: 0.2–0.5 mm (0.008–0.02 in.)

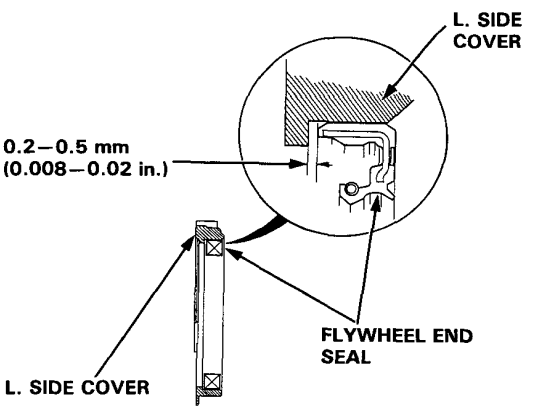

NOTE: Refer to page 5-75 for steps on the oil pump side oil seal.

Pistons

Installation

Before installing the piston, apply a coat of engine oil to the ring grooves and cylinder bores.

1. If the crankshaft is already installed:
   - Remove the connecting rod caps, then slip short sections of rubber hose over the threaded ends of the connecting rod bolts.
   - Install the ring compressor, check that the bearing is securely in place, then position the piston in the cylinder and drive it in using the wooden handle of a hammer.
     Stop after the ring compressor pops free and check the connecting rod-to-crank journal alignment before driving rod into place.
   - Install the rod caps with bearings, and torque the nuts to 45 N•m (4.5 kg-m, 33 lb-ft).
2. If the crankshaft is not installed:
   - Remove the rod caps and bearings, install the ring compressor, then position the piston in the cylinder and drive it in using the wooden handle of a hammer.

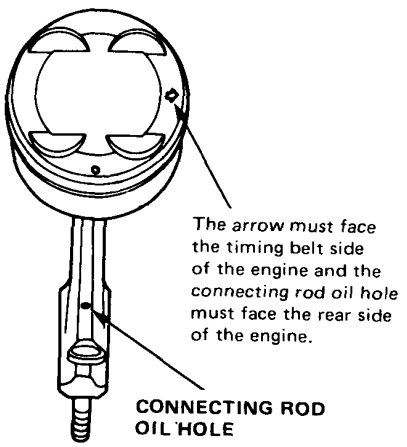

NOTE: Maintain downward force on ring compressor to prevent rings from expanding before entering the cylinder bore.

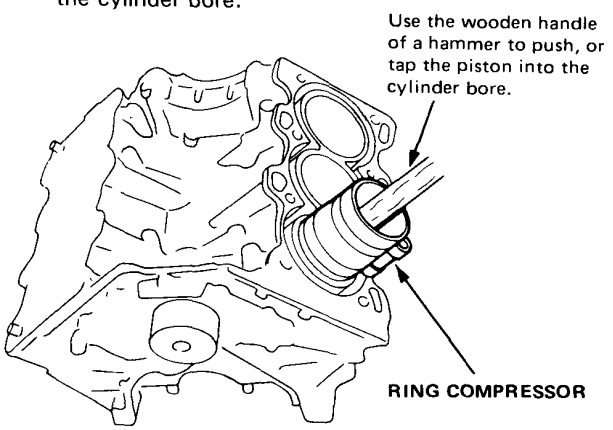

Oil Seal

Installation

The seal surface on the block should be dry. Apply a light coat of oil to the crankshaft and to the lip of seal.

1. Drive in flywheel end seal against L. side cover.
   NOTE: Drive in flywheel end seal squarely.

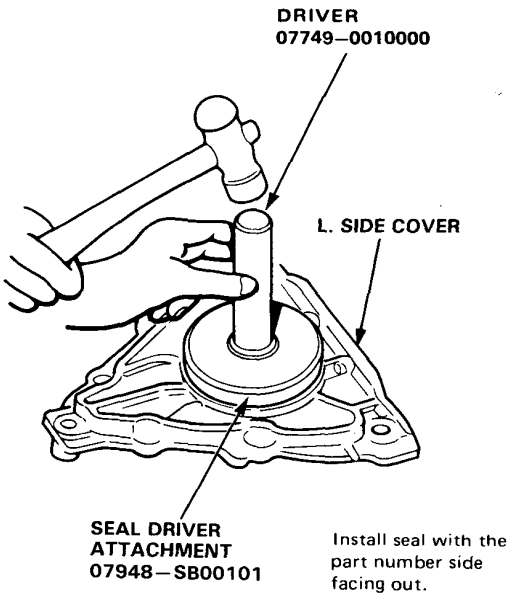

2. Confirm clearance is equal all the way around, with a feeler gauge.

   Clearance: 0.2–0.5 mm (0.008–0.02 in.)

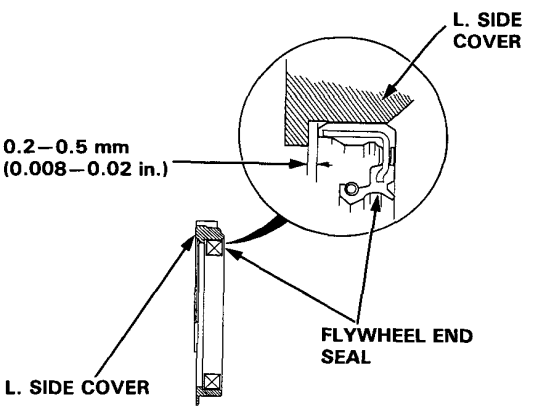

NOTE: Refer to page 5-75 for steps on the oil pump side oil seal.

Installation

Before installing the crankshaft, apply a coat of engine oil to the main bearings and rod bearings.

1. Insert bearing halves in the engine block and connecting rods.

2. Lower the crankshaft into the block.

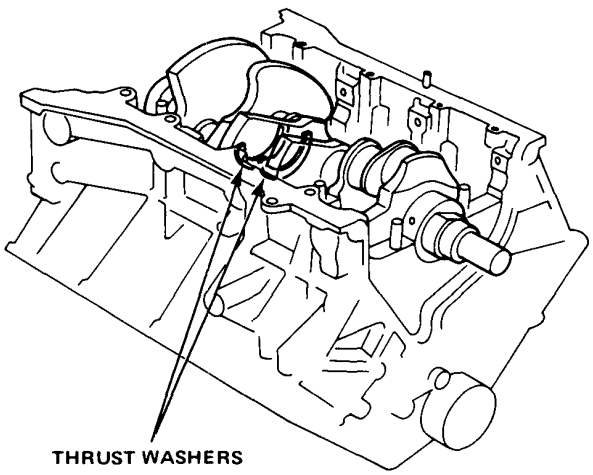

3. Install the thrust washers on the No. 3 journal. Oil thrust washer surfaces.

4. Install the bearings and caps. Torque the cap bolts.

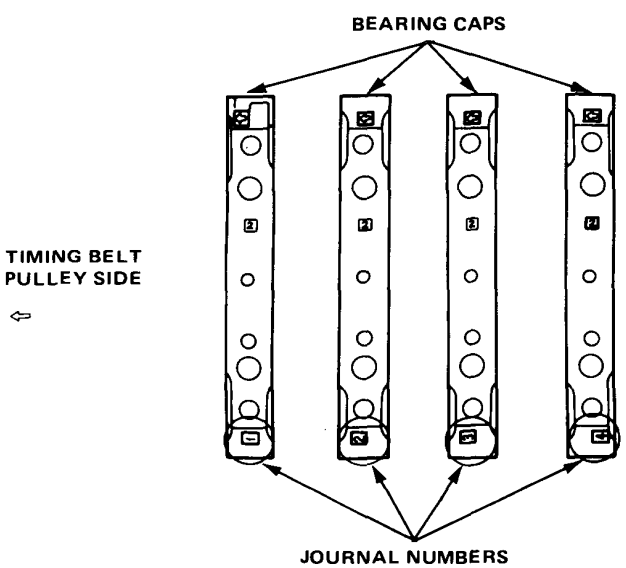

NOTE:
- Install the pistons after setting the crankshaft to the BDC for each cylinder.
- Guide the piston carefully to prevent damage.
- Fit long rubber hoses (about 30 cm long) to connecting rod bolts to protect the crankshaft.

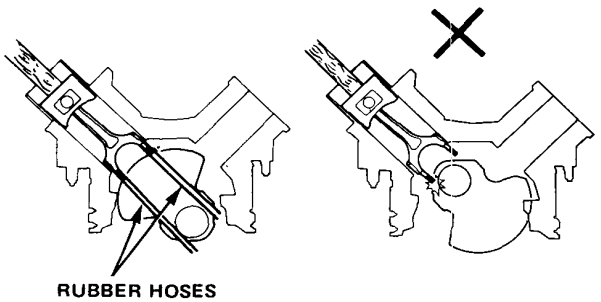

5. Tighten the connecting rod bolts.

   - Install the piston assemblies in No. 1 and No. 4 cylinders, No. 2 and No. 5 cylinders, and No. 3 and No. 6 cylinders.

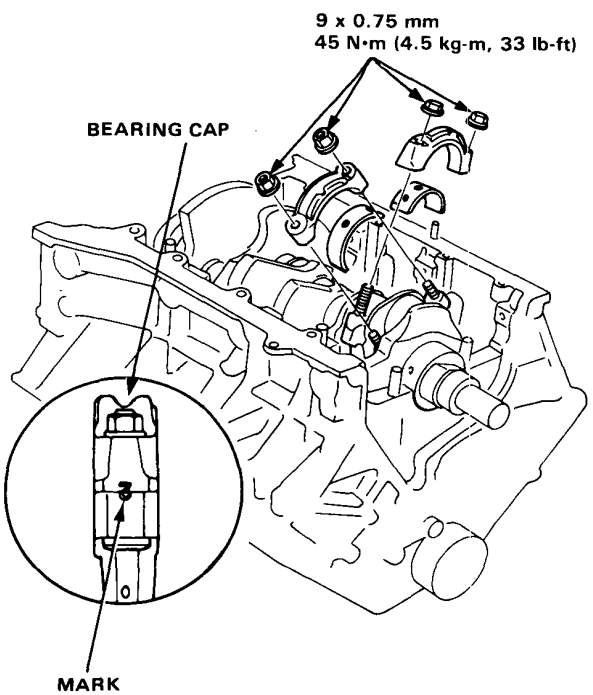

- Line up the marks when installing connecting rod caps.

6. Check the rod bearing clearance with plastigage (page 7-5), then torque nuts to 45 N•m (4.5 kg-m, 33 lb-ft).

   NOTE: Reference numbers on connecting rod are for big-end bore tolerance and do NOT indicate the position of piston in engine.

7. Tighten 9 mm bolts to the specified torque.

   Torque: 40 N•m (4.0 kg-m, 29 lb-ft)

8. Install the bearing cap bridge, and tighten 11 mm bolts to the specified torque diagonally outward from the center.

   Torque: 68 N•m (6.8 kg-m, 49 lb-ft)

9. Tighten cap side bolts (10 mm) to the specified torque.

   Torque: 50 N•m (5.0 kg-m, 36 lb-ft)

   - Coat engine oil on the bolt thread and seat surface.

   NOTE: The shorter side bolts are for the front side.

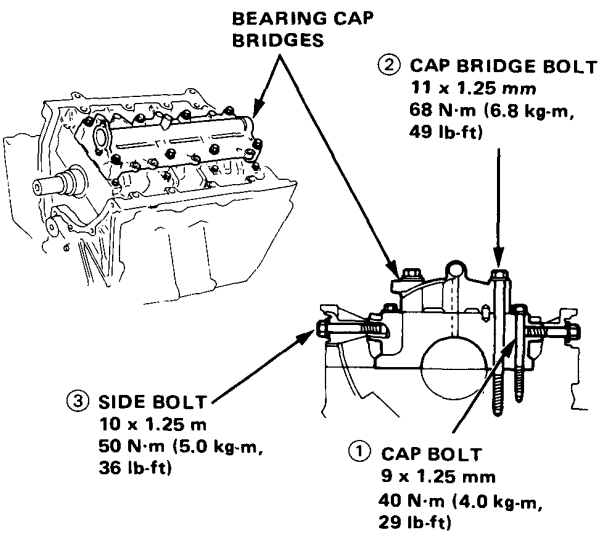

BEARING CAP BOLTS TORQUE SEQUENCE

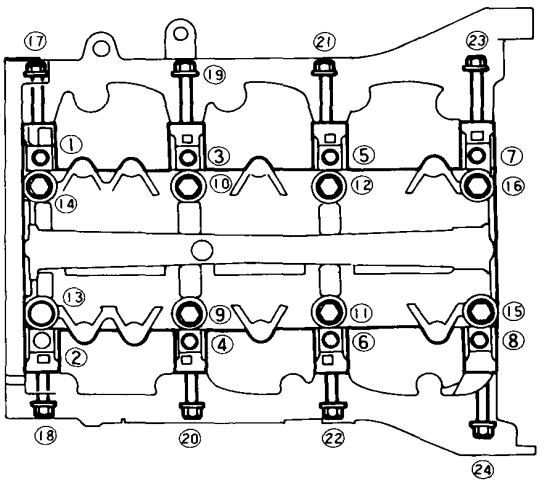

10. Apply non-hardening liquid gasket to the block mating surface of the left side cover and oil pump case, and install them on the engine block.

LEFT SIDE:

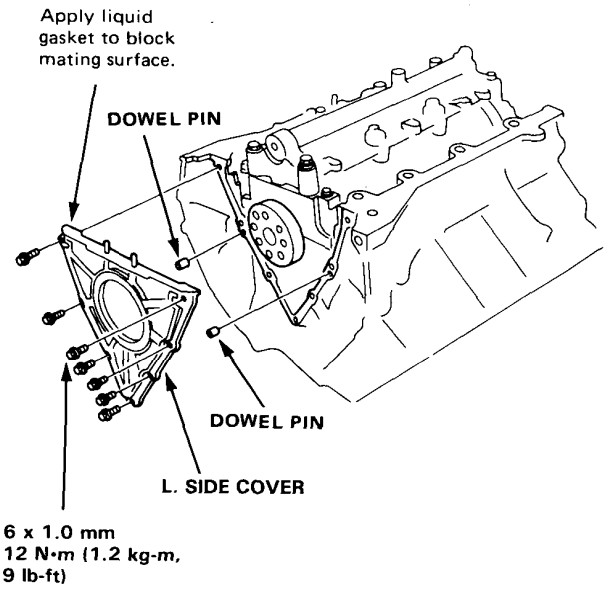

(cont'd)

Installation (cont'd)

OIL PUMP SIDE:

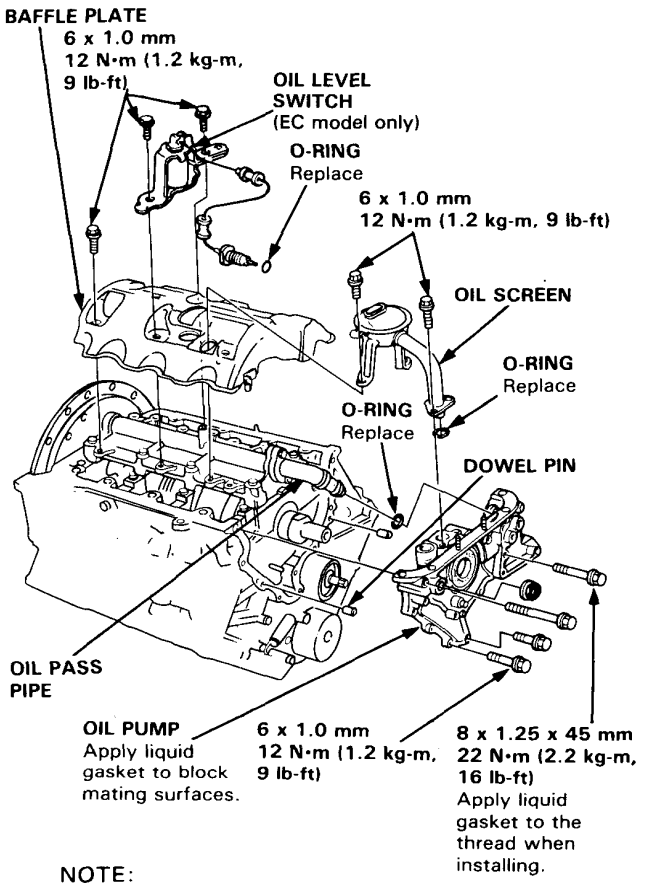

NOTE:

- Use PART NO. 08718—550000 OE for the liquid gasket.
- Check that the mating surfaces are clean and dry before applying liquid gasket.
- Apply liquid gasket by starting with an even band, centered between edges of the mating surface.
- To prevent leakage of oil, apply liquid gasket to the inner threads of the bolt holes.

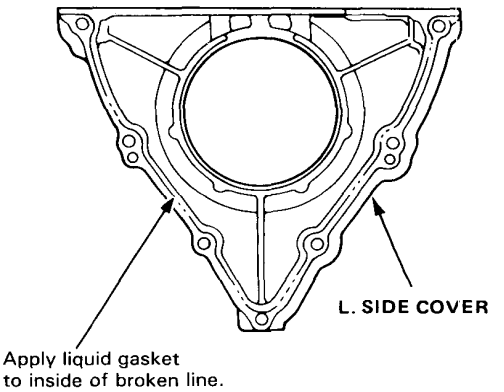

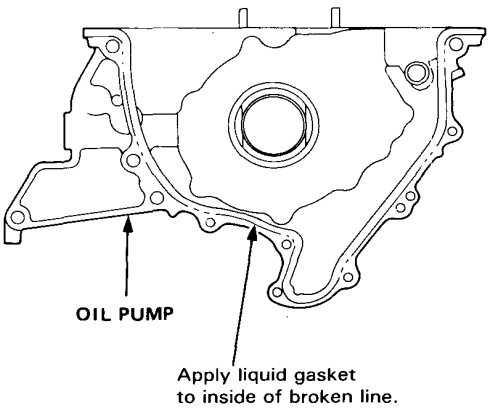

- Do not allow the sealant to dry before assembly.
- Wait at least 30 minutes after assembly before filling the engine with oil.

11. Install the oil pass pipe and joint.
12. Install the baffle plate and install the oil level switch.
13. Install the oil screen.
14. Install the oil pan.

CAUTION: Whenever any crankshaft or connecting rod bearing is replaced, after reassembly run the engine at idling speed until it reaches normal operating temperature, then continue to run for approximately 15 minutes.

Engine Lubrication

Special Tools 5-69
Illustrated Index 5-70
Engine Oil
  Oil Level Inspection 5-71
  Oil Replacement 5-71
Oil Filter
  Replacement 5-72
Oil Pressure
  Test 5-72
Oil Pump
  Overhaul 5-73
  Removal/Inspection 5-74
Oil Cooler, Oil Filter Base
  Illustrated Index 5-77

Special Tools

Ref. No.	Tool Number	Description	Q'ty	Remarks
①	07912–6110001	Oil Filter Socket	1	
②	07406–0030000	Oil Pressure Gauge Adaptor	1	
③	07GAD–PH70200	Oil Seal Driver	1	

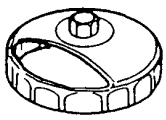
①

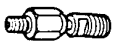
②

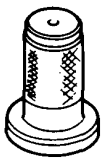
③

Engine Lubrication

Illustrated Index

NOTE:
- Use new O-rings whenever reassembling.
- Apply oil to O-rings before installation.

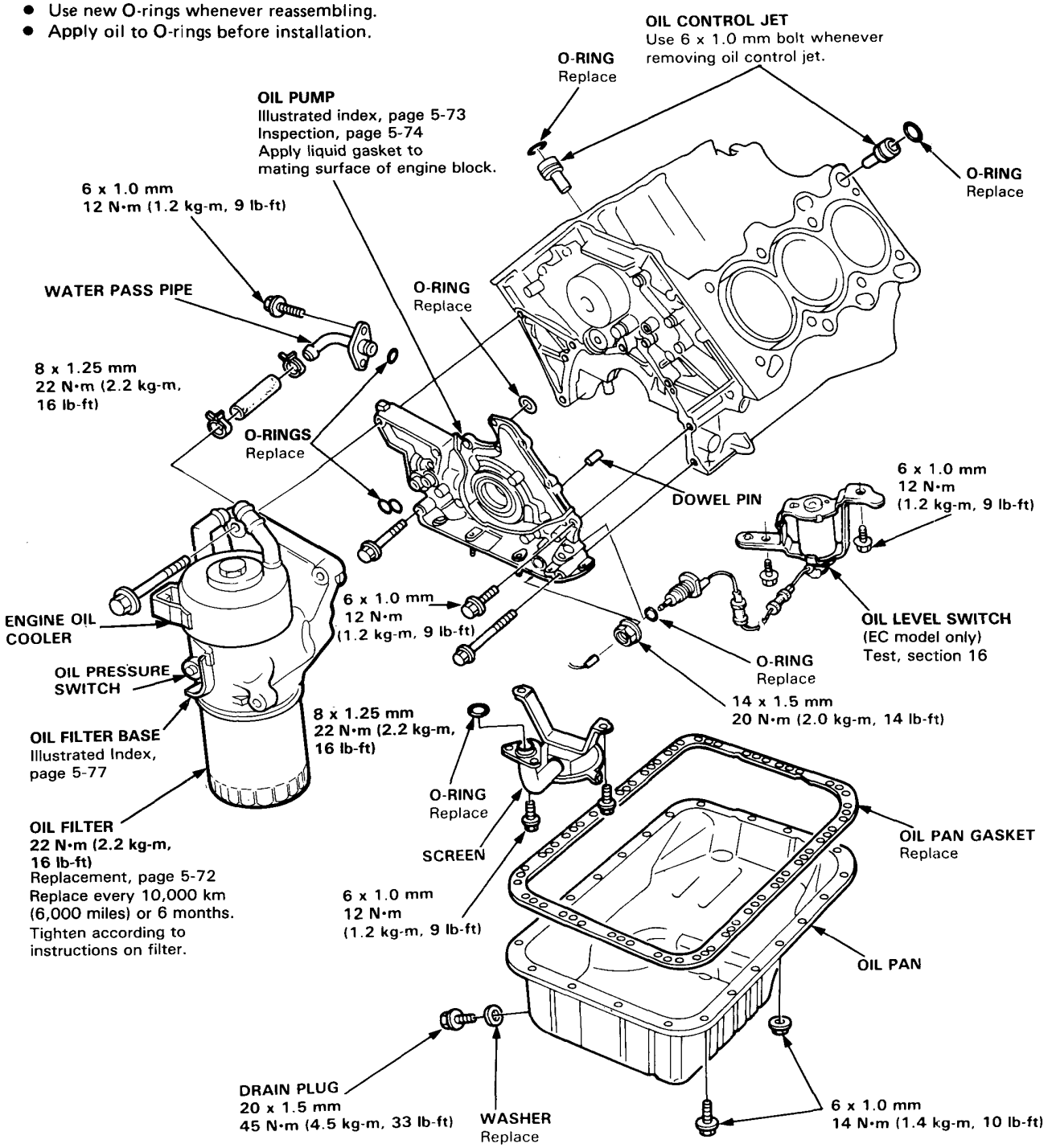

Oil Level

Inspection

1. Check engine oil with the engine off and the car parked on level ground.

2. Make certain that the oil level indicated on the dipstick is between the upper and lower marks.

3. If the level has dropped close to the lower mark, add oil until it reaches the upper mark.

   CAUTION: Insert the dipstick carefully to avoid bending it.

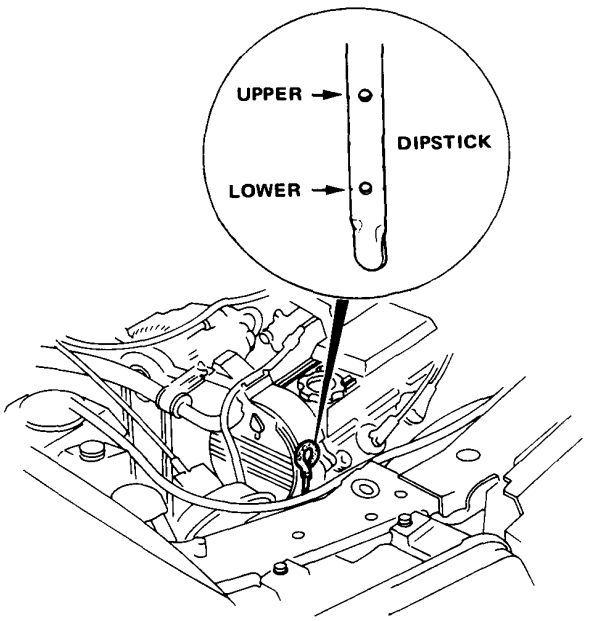

Engine Oil

Replacement

1. Warm up the engine.

2. Drain the engine oil.

   NOTE: Remove the filler cap to speed draining.

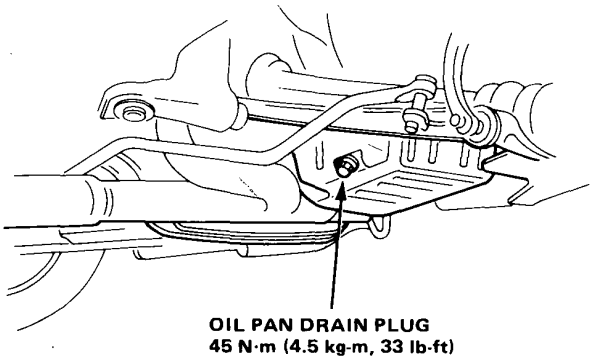

3. Reinstall the drain plug with a new washer, and refill with the recommended oil.

Requirement	SE or SF Grade only
Capacity	4.5 ℓ (4.8 U.S. qt., 4.0 Imp. qt.) at change, including filter. 5.7 ℓ (6.0 U.S. qt., 5.0 Imp. qt.) after engine overhaul.
Change	Every 10,000 km (6.000 miles) or 6 months.

NOTE: Oil filter should be replaced at each oil change.

Recommended Engine Oil (SE or SF Grade only)

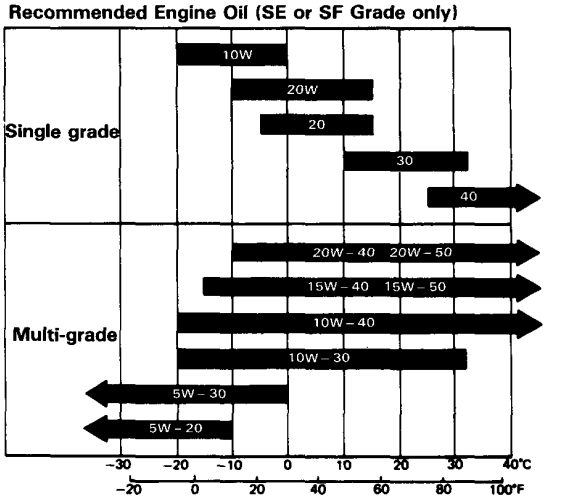

Expected Ambient Temperature before next oil change

Oil Filter

Replacement

CAUTION: Loosen the oil filter carefully while the engine is hot, the hot oil may cause scalding.

1. Remove the oil filter with the special oil filter socket.

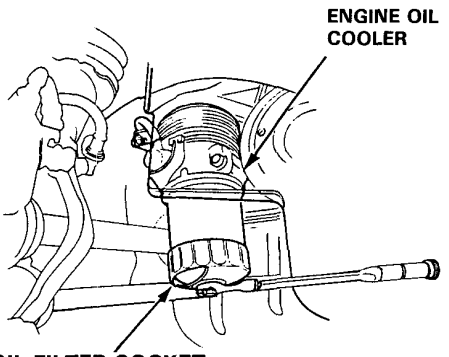

2. Inspect the threads and gasket on the new filter. Wipe off seat on oil filter base, then apply a light coat of oil to the gasket, and install filter. Tighten according to instructions on, or with, the filter.

   NOTE: Use only filters with a built-in bypass system.

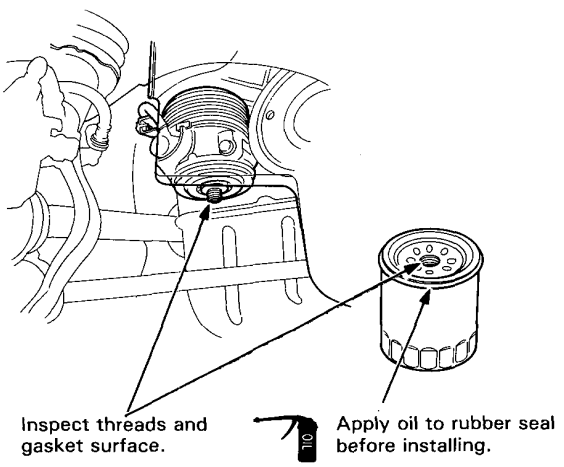

Oil Pressure

Test

If the oil pressure warning light stays on with the engine running, check the engine oil level. If the oil level is correct:

1. Remove the oil pressure sender and install an oil pressure gauge.
2. Start the engine and allow to reach operating temperature (fan comes on at least twice).
3. Pressure should be:

   Engine Oil Pressure:

At Idle:	**137 kPa (1.4 kg/cm^2, 20 psi) minimum**
At 3,000 rpm:	**490–569 kPa (5.0–5.8 kg/cm^2, 71–82 psi)**

   - If oil pressure is within specifications, replace oil pressure sender and recheck.
   - If oil pressure is NOT within specifications, inspect oil pump (page 5-74).

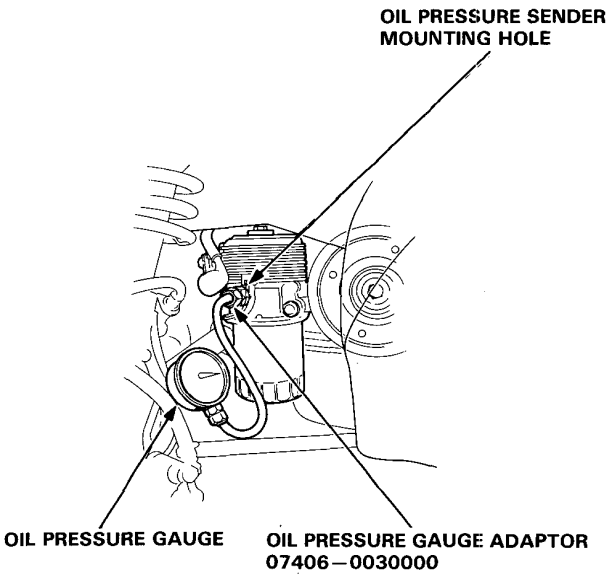

Oil Pump

Overhaul

NOTE:
- Use new O-rings when reassembling.
- Apply oil to O-rings before installation.

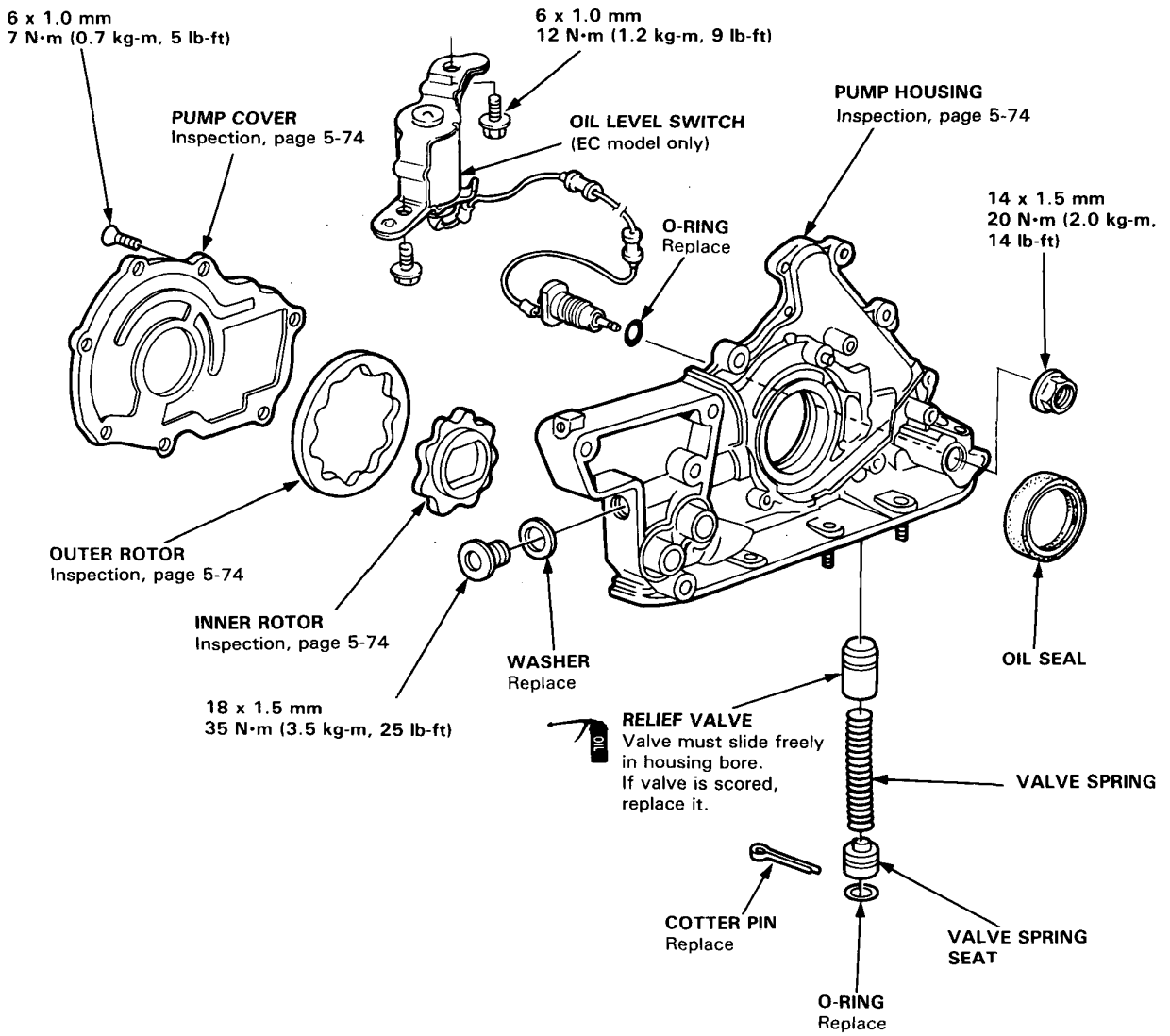

Oil Pump

Removal/Inspection

1. Drain the engine oil.
2. Turn the crankshaft and align the "TDC" mark on the crankshaft pulley with the index mark on the cover.
3. Remove the timing belt upper cover.
4. Remove the alternator belt, power steering belt and air conditioning compressor belt.
5. Remove the splash guard.
6. Remove the crankshaft pulley and remove the timing belt lower cover.
7. Release the belt tensioner, and remove the timing belt and driven pulley.
8. Remove the oil filter assembly.
9. Remove the oil pan.
10. Remove the oil screen and remove the oil level switch (EC model only).
11. Remove the baffle plate.
12. Remove the oil pass pipe and joint.
13. Remove the mounting bolts and the oil pump assembly.

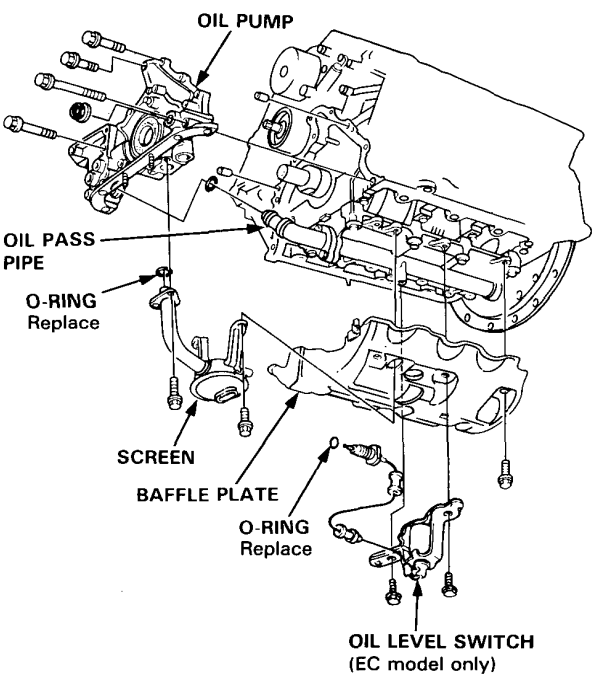

14. Remove the five screws from the pump housing, then separate the housing and cover.
15. Check the radial clearance on the pump rotor.

Rotor Radial Clearance
Standard (New): 0.04–0.18 mm (0.002–0.007 in.)
Service Limit: 0.2 mm (0.008 in.)

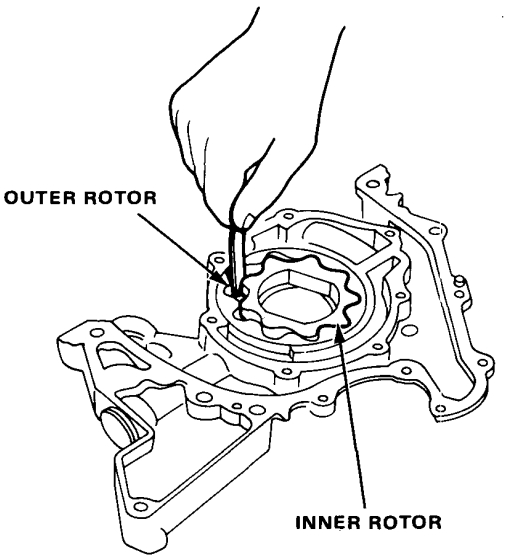

16. Check the axial clearance on the outer pump rotor.

Housing-to-Rotor Axial Clearance
Standard (New): 0.02–0.07 mm (0.001–0.003 in.)
Service Limit: 0.12 mm (0.005 in.)

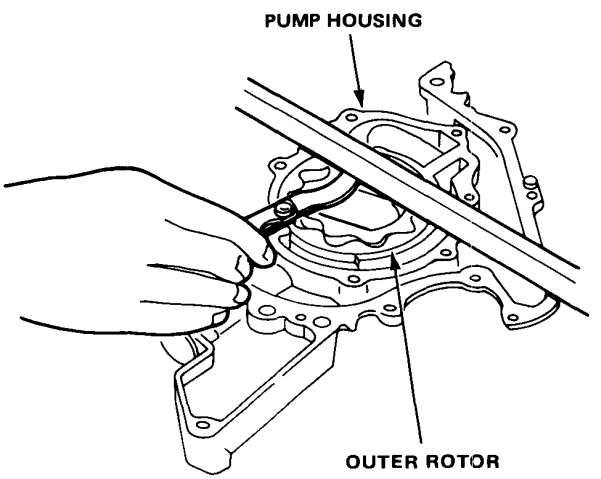

17. Check the radial clearance between the housing and the outer rotor.

Housing-to-Rotor Radial Clearance
Standard (New): 0.1–0.18 mm (0.004–0.007 in.)
Service Limit: 0.2 mm (0.008 in.)

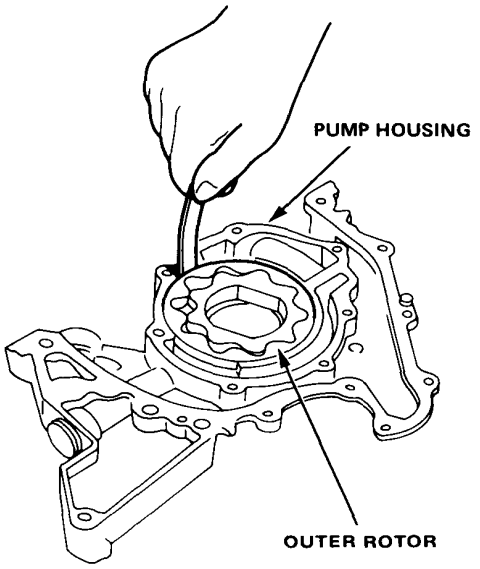

18. Inspect both rotors and pump housing for scoring or other damage. Replace parts as necessary.

19. Remove the old oil seal from the oil pump.

20. Gently tap in the new oil seal until the tool bottoms on the pump.

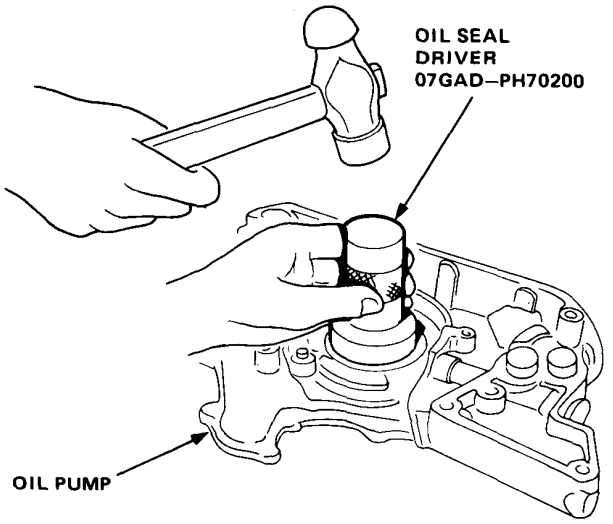

21. Reassemble the oil pump, applying locking fluid to the pump housing screws.

22. Check that the oil pump turns freely.

23. Apply a light coat of oil to the seal lip.

24. Install the two dowel pins and new O-ring on the cylinder block.

25. Apply liquid gasket to the cylinder block mating surface of the oil pump.

NOTE:
- Use PART NO. 08740–99986 for the liquid gasket.
- Check that the mating surfaces are clean and dry before applying liquid gasket.
- Apply liquid gasket evenly, in a narrow bead centered on the mating surface.
- To prevent leakage of oil, apply sealant to the inner threads of the bolt holes.

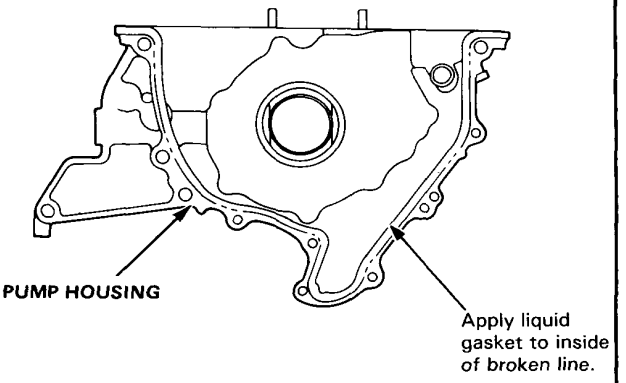

- Do not allow the sealant to dry before assembly.
- Wait at least 30 minutes after assembly before filling the engine with oil.

(cont'd)

Removal/Inspection (cont'd)

26. Install the oil pump on the cylinder block.
    - Apply liquid gasket to threads of the 8 x 1.25 x 45 mm bolt.
27. Install the oil pass pipe and joint.
28. Install the baffle plate.
29. Install the oil level switch (EC model only).
30. Install the oil pan.

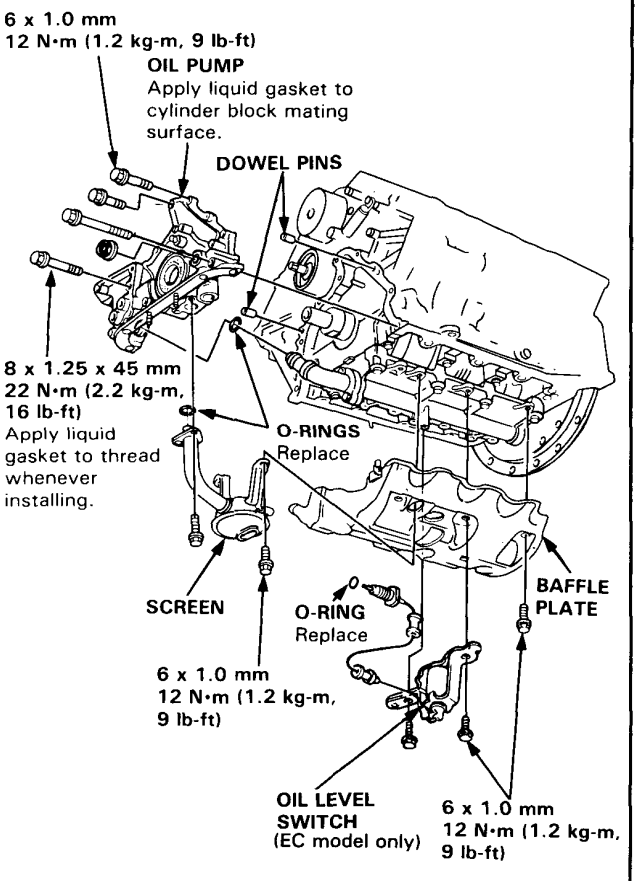

Oil Cooler, Oil Filter Base

Illustrated Index

NOTE:
- Use new O-rings whenever reassembling.
- Apply oil to O-rings before installation.

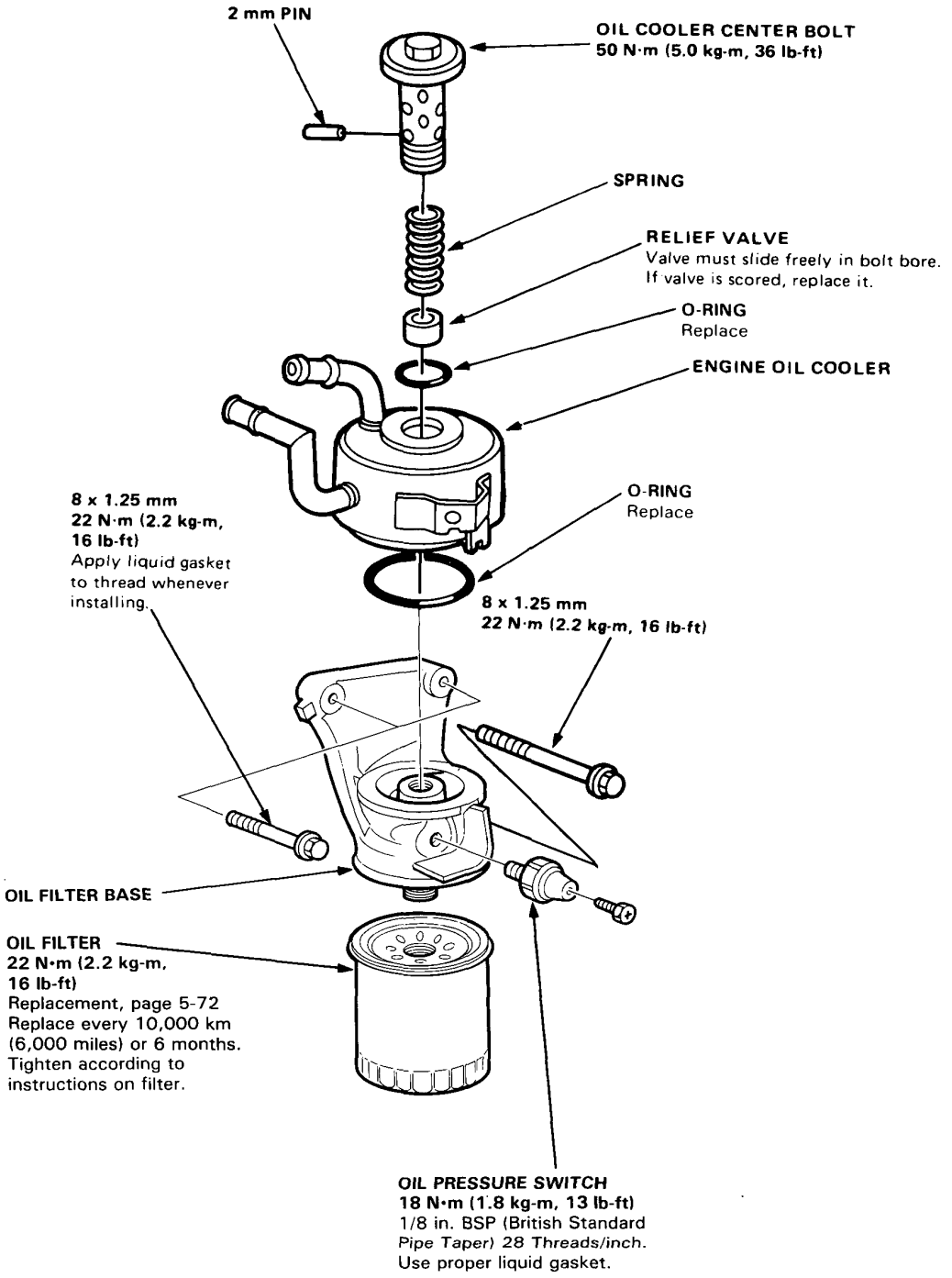

Component Locations

LH drive

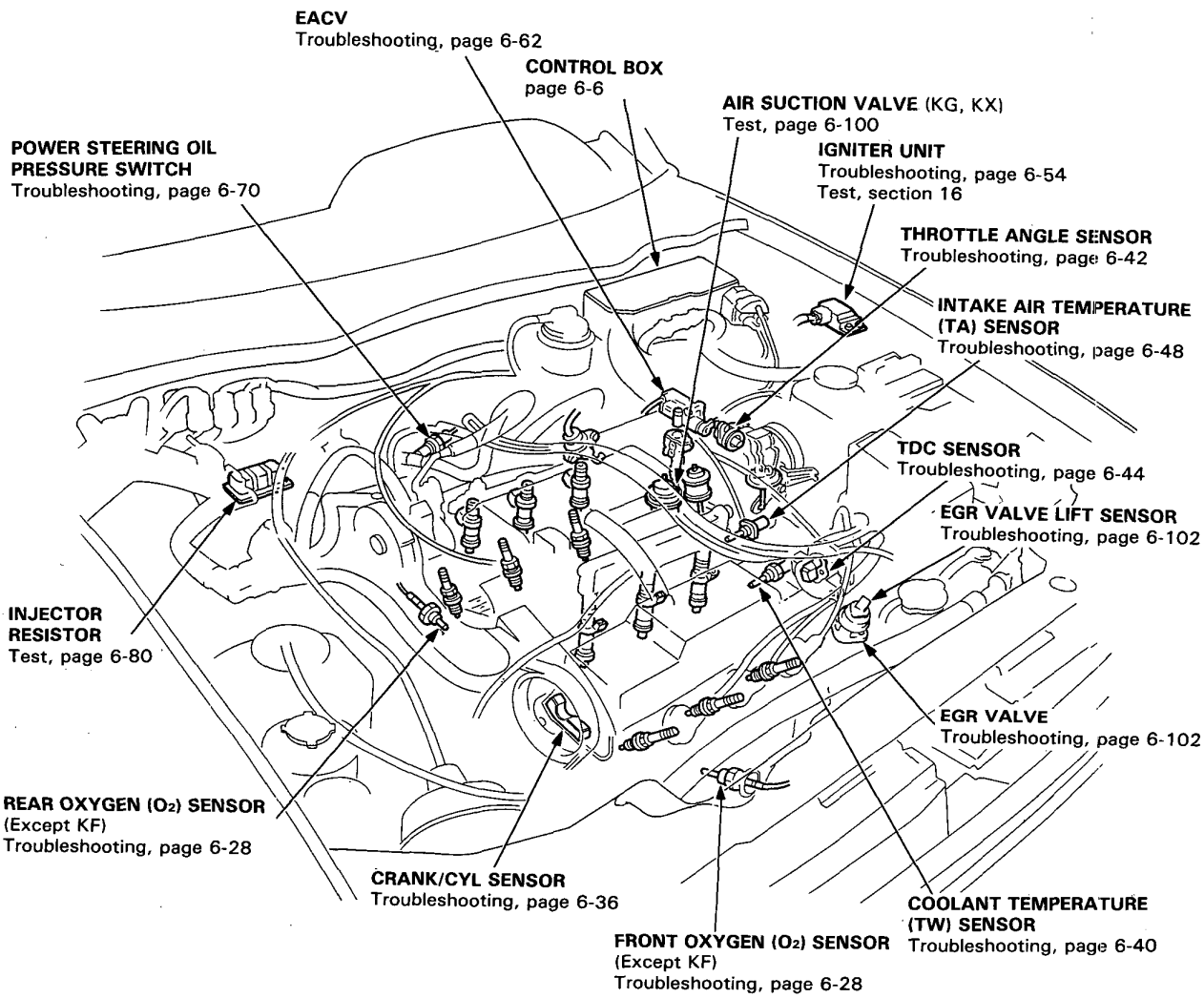

RH drive

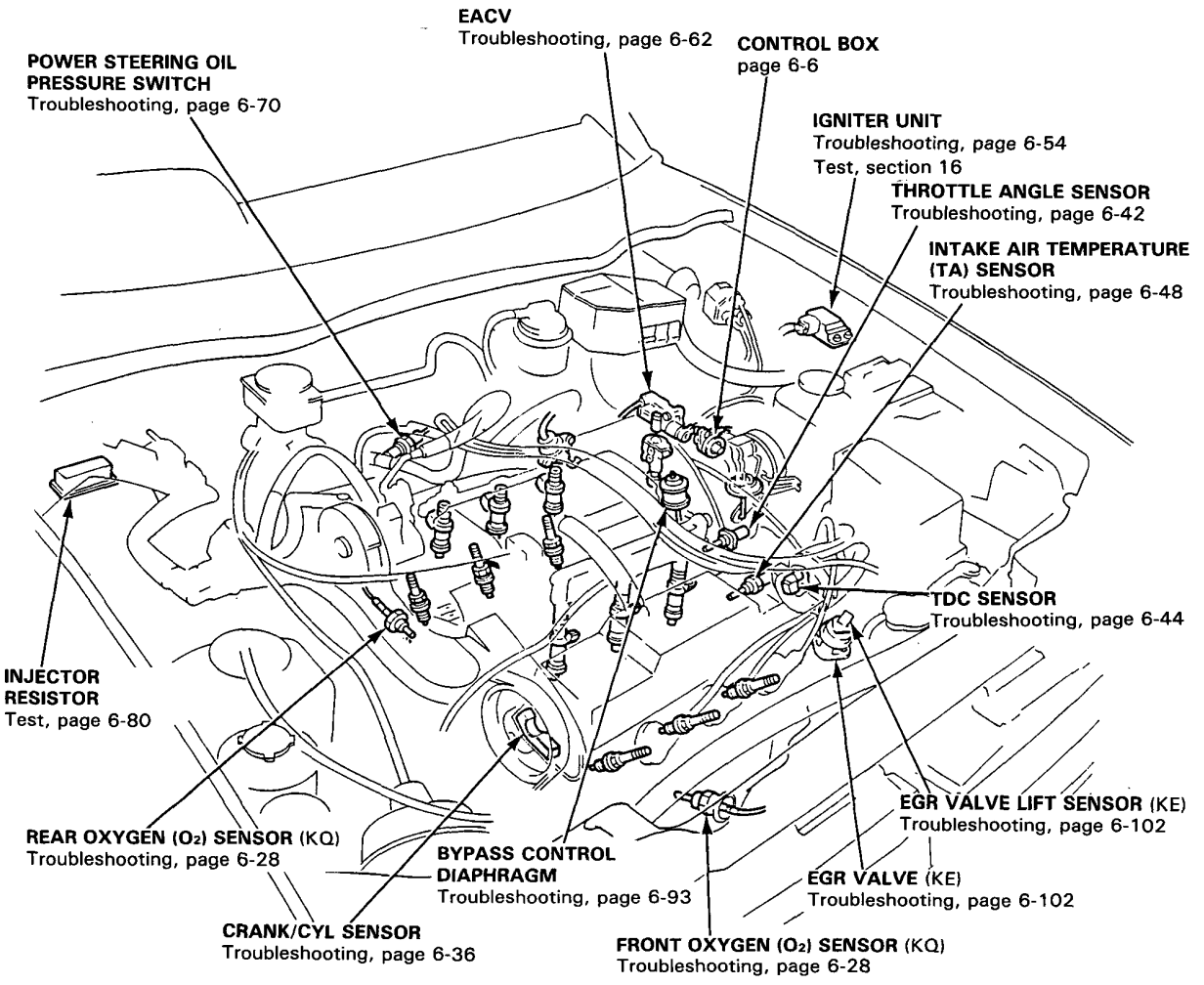
EACV
Troubleshooting, page 6-62
CONTROL BOX
page 6-6
POWER STEERING OIL PRESSURE SWITCH
Troubleshooting, page 6-70
IGNITER UNIT
Troubleshooting, page 6-54
Test, section 16
THROTTLE ANGLE SENSOR
Troubleshooting, page 6-42
INTAKE AIR TEMPERATURE (TA) SENSOR
Troubleshooting, page 6-48
TDC SENSOR
Troubleshooting, page 6-44
INJECTOR RESISTOR
Test, page 6-80
EGR VALVE LIFT SENSOR (KE)
Troubleshooting, page 6-102
REAR OXYGEN (O2) SENSOR (KQ)
Troubleshooting, page 6-28
BYPASS CONTROL DIAPHRAGM
Troubleshooting, page 6-93
EGR VALVE (KE)
Troubleshooting, page 6-102
CRANK/CYL SENSOR
Troubleshooting, page 6-36
FRONT OXYGEN (O2) SENSOR (KQ)
Troubleshooting, page 6-28

Component Locations

LH drive

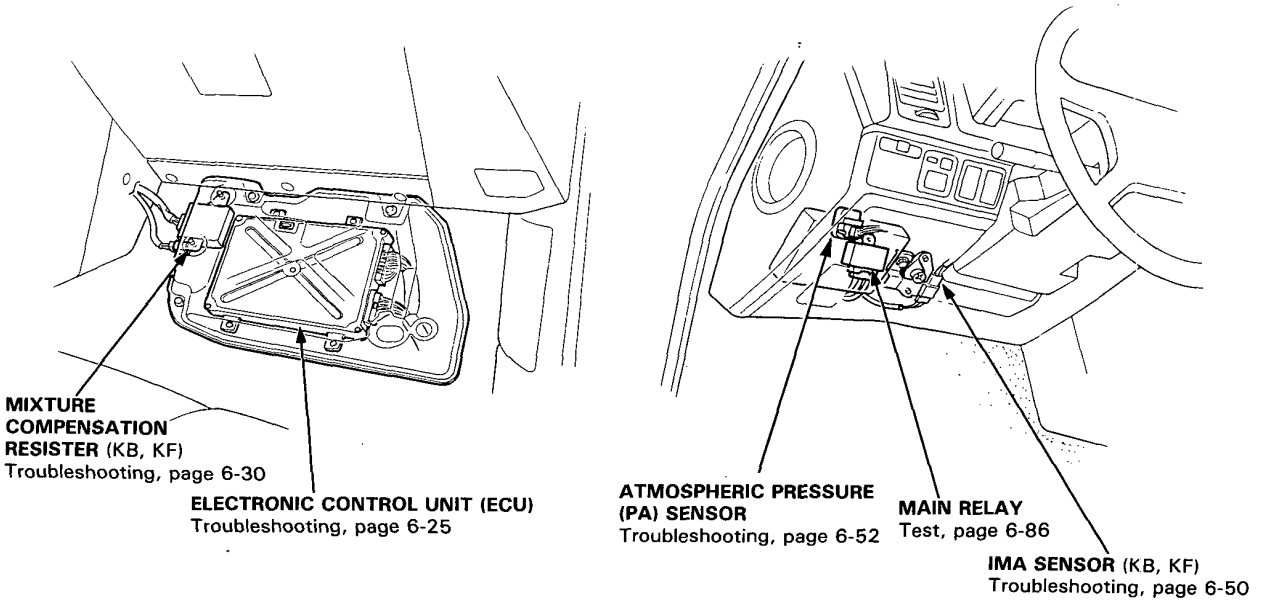

RH drive

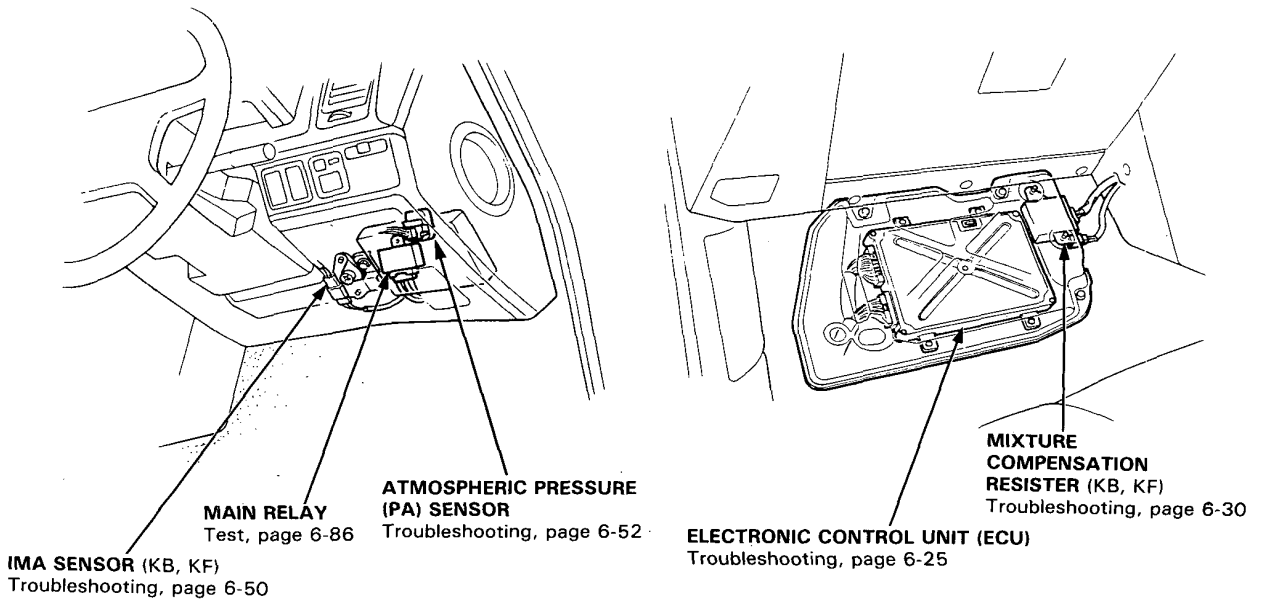

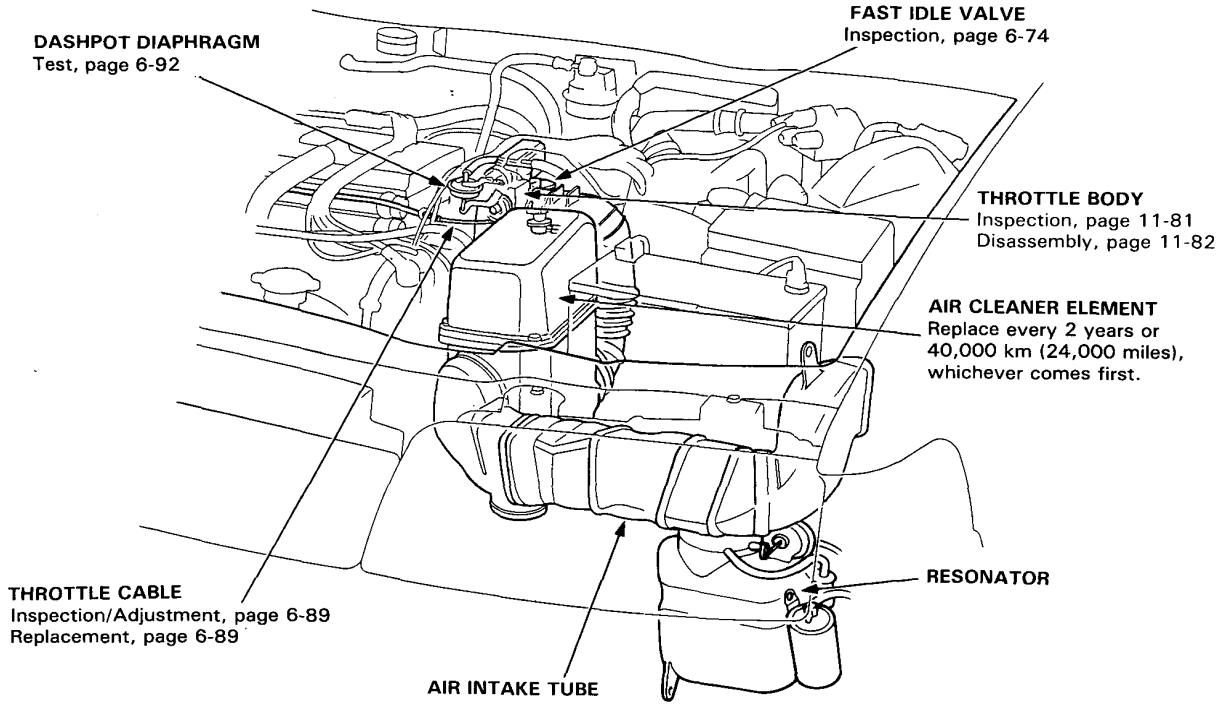
DASHPOT DIAPHRAGM
Test, page 6-92
FAST IDLE VALVE
Inspection, page 6-74
THROTTLE BODY
Inspection, page 11-81
Disassembly, page 11-82
AIR CLEANER ELEMENT
Replace every 2 years or 40,000 km (24,000 miles), whichever comes first.
RESONATOR
THROTTLE CABLE
Inspection/Adjustment, page 6-89
Replacement, page 6-89
AIR INTAKE TUBE

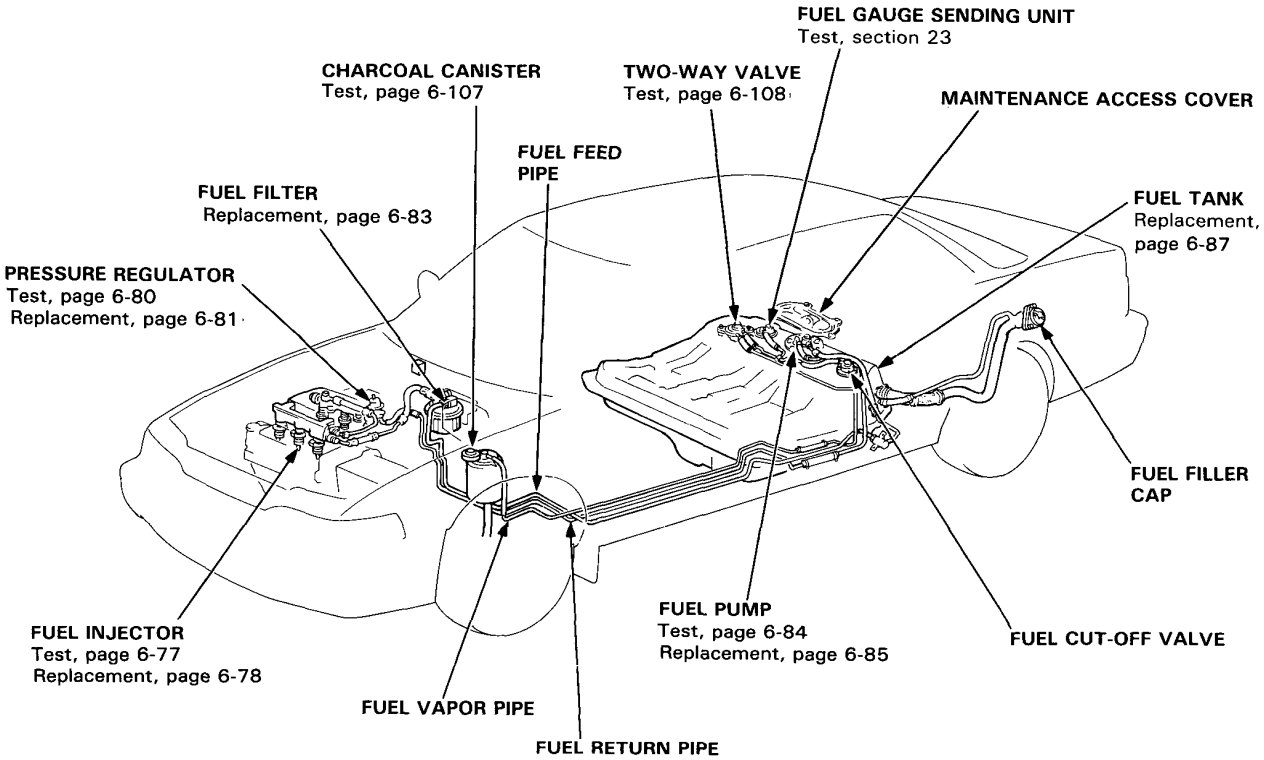
FUEL GAUGE SENDING UNIT
Test, section 23
CHARCOAL CANISTER
Test, page 6-107
TWO-WAY VALVE
Test, page 6-108
MAINTENANCE ACCESS COVER
FUEL FEED PIPE
FUEL FILTER
Replacement, page 6-83
FUEL TANK
Replacement, page 6-87
PRESSURE REGULATOR
Test, page 6-80
Replacement, page 6-81
FUEL FILLER CAP
FUEL INJECTOR
Test, page 6-77
Replacement, page 6-78
FUEL PUMP
Test, page 6-84
Replacement, page 6-85
FUEL CUT-OFF VALVE
FUEL VAPOR PIPE
FUEL RETURN PIPE

Vacuum Connections

KX, KG

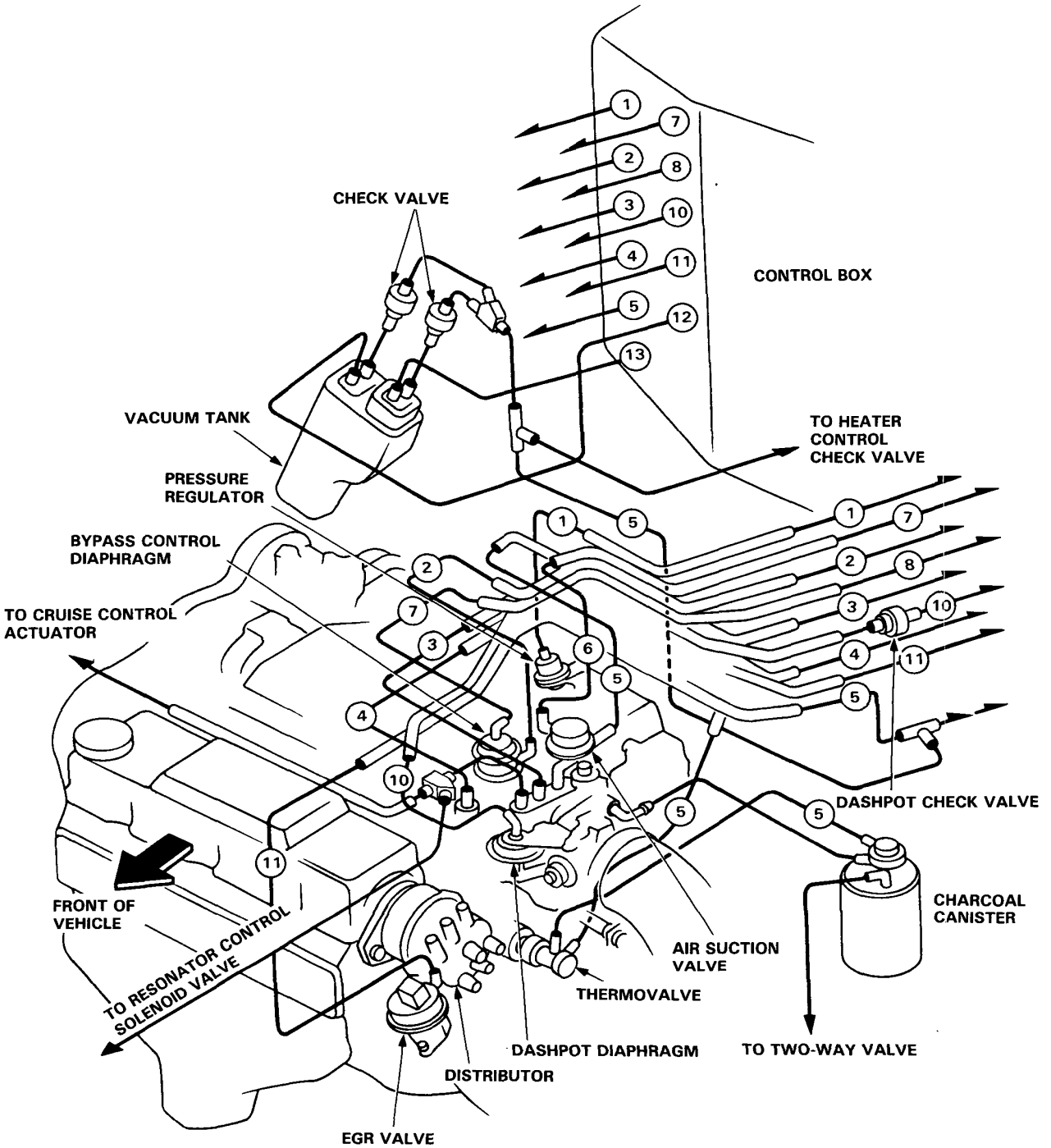

Control Box

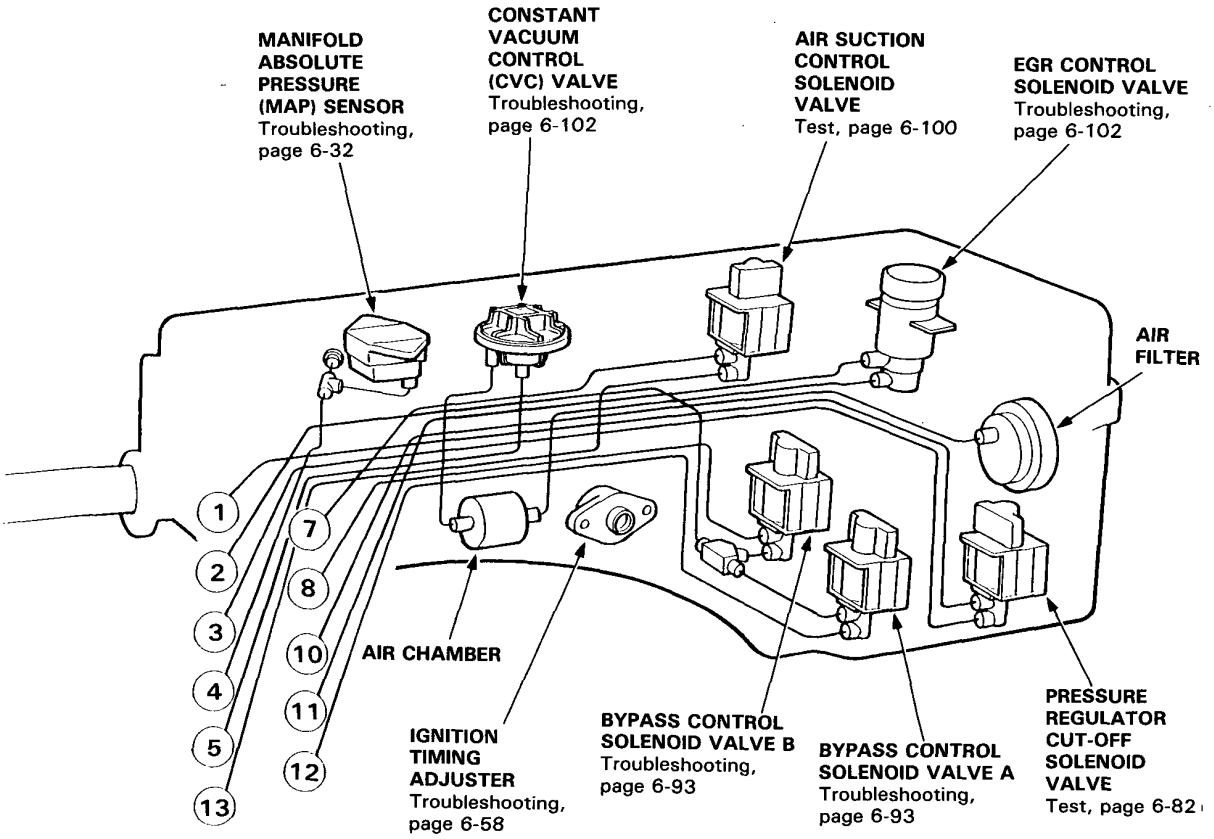
MANIFOLD ABSOLUTE PRESSURE (MAP) SENSOR
Troubleshooting, page 6-32
CONSTANT VACUUM CONTROL (CVC) VALVE
Troubleshooting, page 6-102
AIR SUCTION CONTROL SOLENOID VALVE
Test, page 6-100
EGR CONTROL SOLENOID VALVE
Troubleshooting, page 6-102
AIR FILTER
1
2
3
4
5
13
7
8
10
11
12
AIR CHAMBER
IGNITION TIMING ADJUSTER
Troubleshooting, page 6-58
BYPASS CONTROL SOLENOID VALVE B
Troubleshooting, page 6-93
BYPASS CONTROL SOLENOID VALVE A
Troubleshooting, page 6-93
PRESSURE REGULATOR CUT-OFF SOLENOID VALVE
Test, page 6-82

KQ

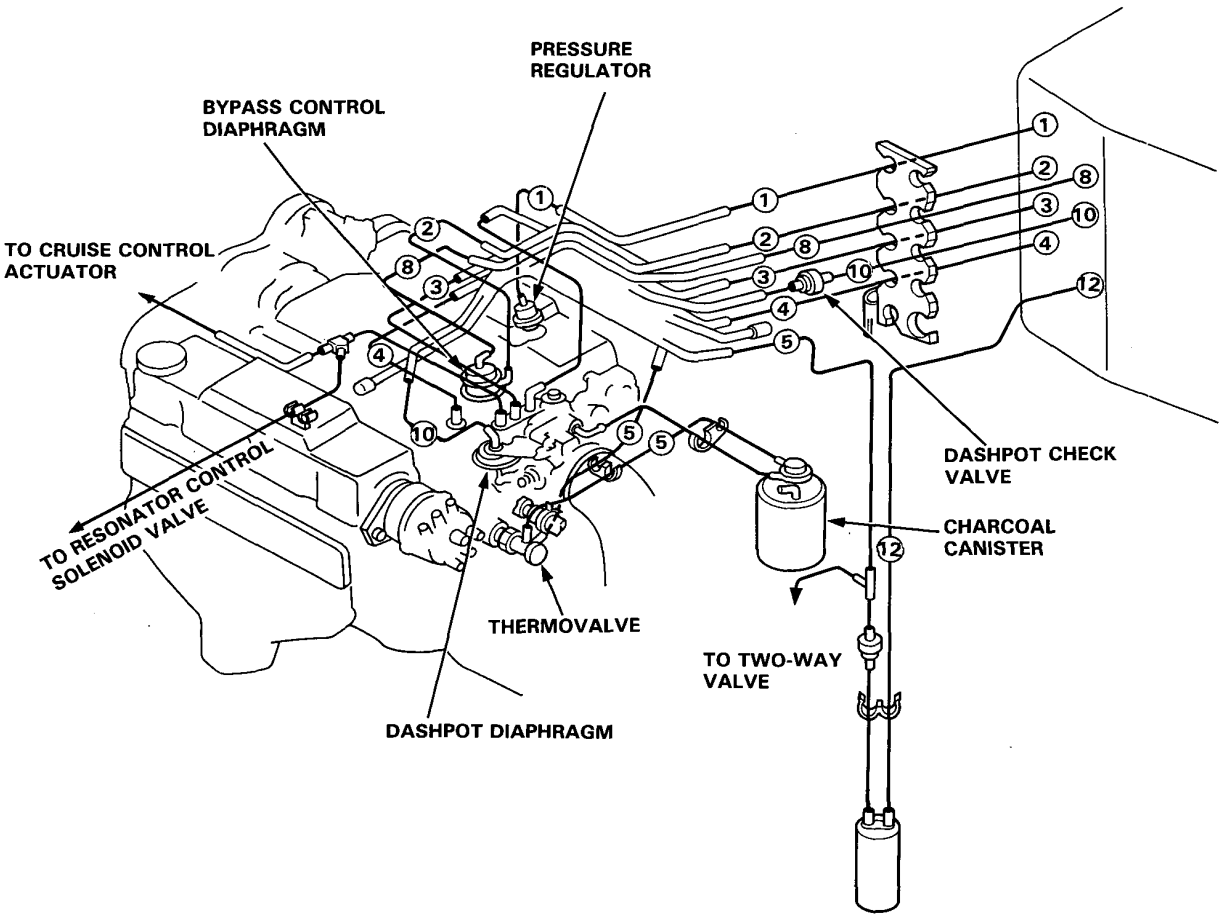
PRESSURE REGULATOR
BYPASS CONTROL DIAPHRAGM
TO CRUISE CONTROL ACTUATOR
TO RESONATOR CONTROL SOLENOID VALVE
DASHPOT CHECK VALVE
CHARCOAL CANISTER
THERMOVALVE
TO TWO-WAY VALVE
DASHPOT DIAPHRAGM

Control Box

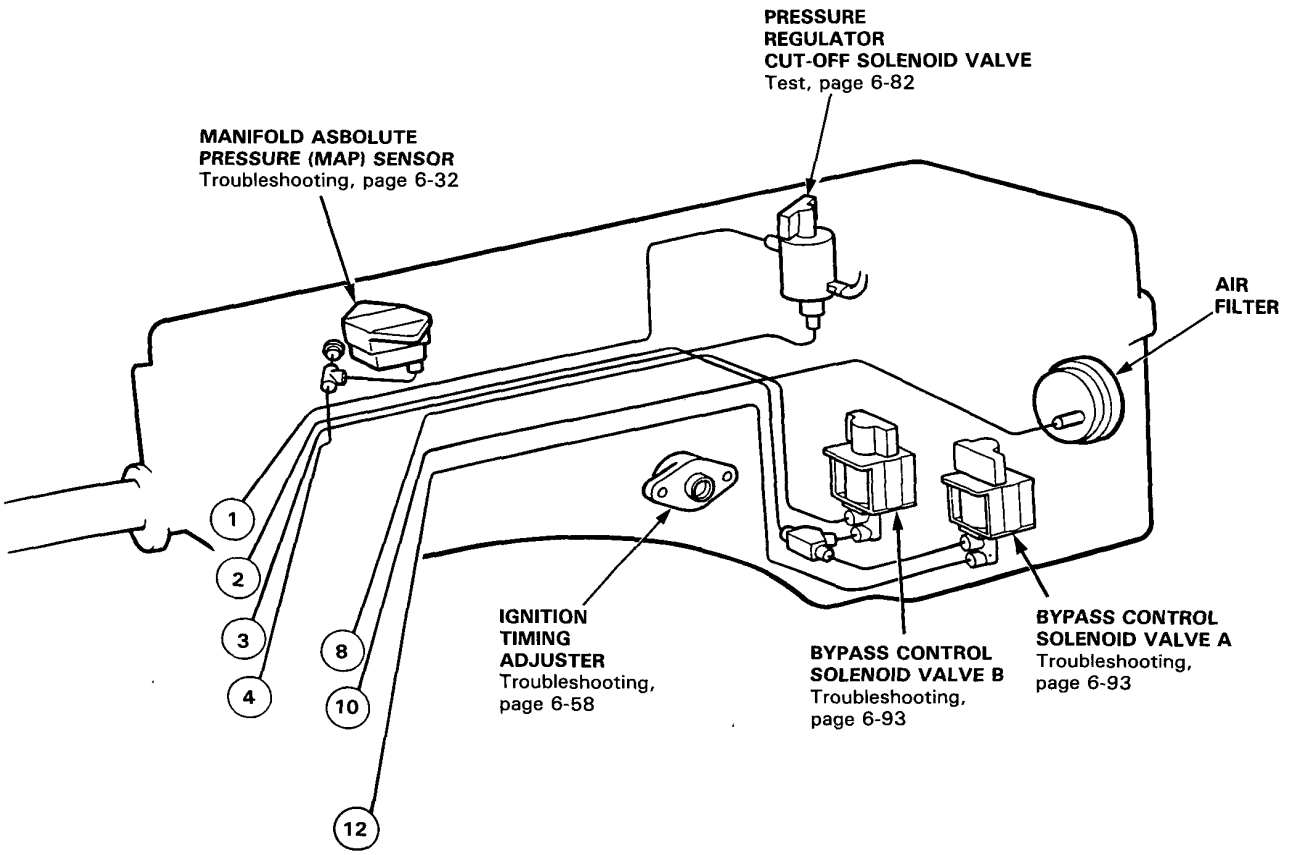
PRESSURE
REGULATOR
CUT-OFF SOLENOID VALVE
Test, page 6-82
MANIFOLD ASBOLUTE
PRESSURE (MAP) SENSOR
Troubleshooting, page 6-32
AIR
FILTER
1
2
3
4
8
10
12
IGNITION
TIMING
ADJUSTER
Troubleshooting,
page 6-58
BYPASS CONTROL
SOLENOID VALVE B
Troubleshooting,
page 6-93
BYPASS CONTROL
SOLENOID VALVE A
Troubleshooting,
page 6-93

Vacuum Connection

KE

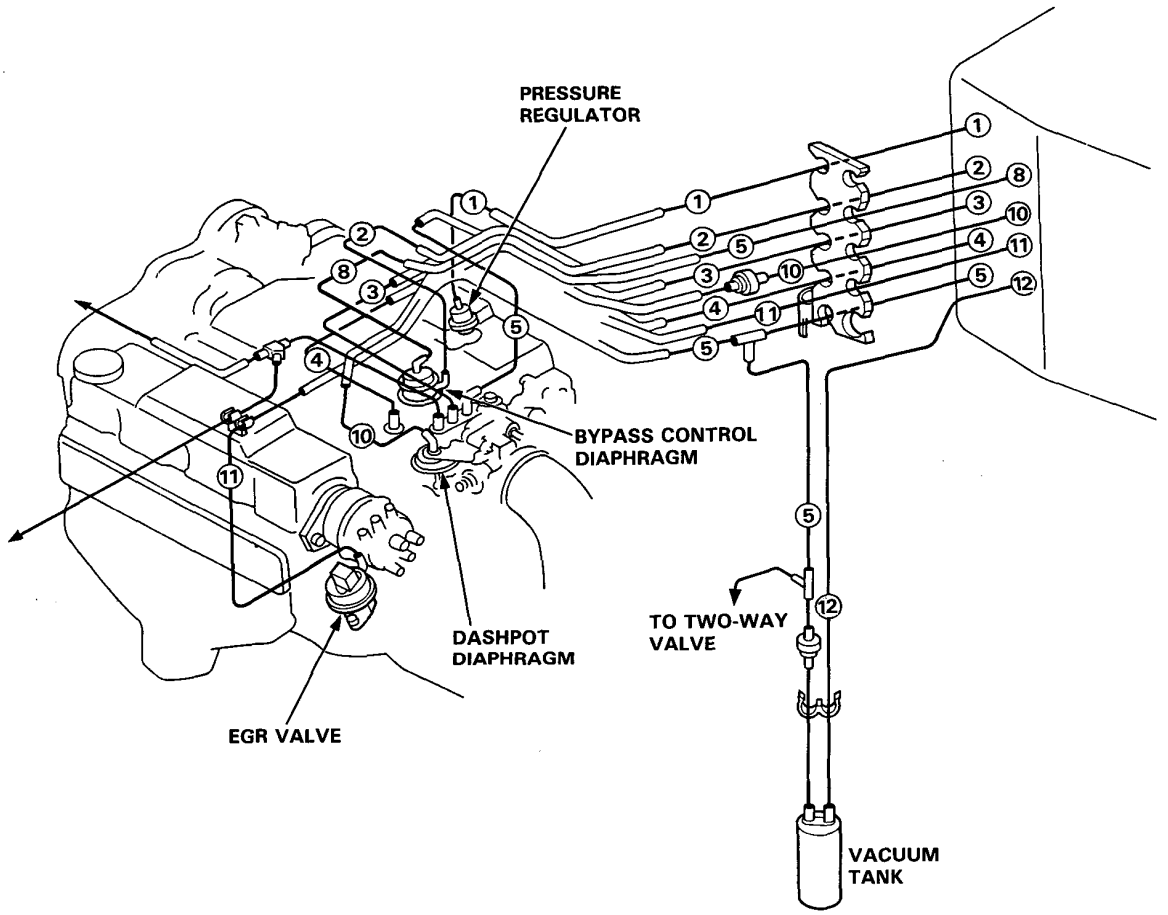

Control Box

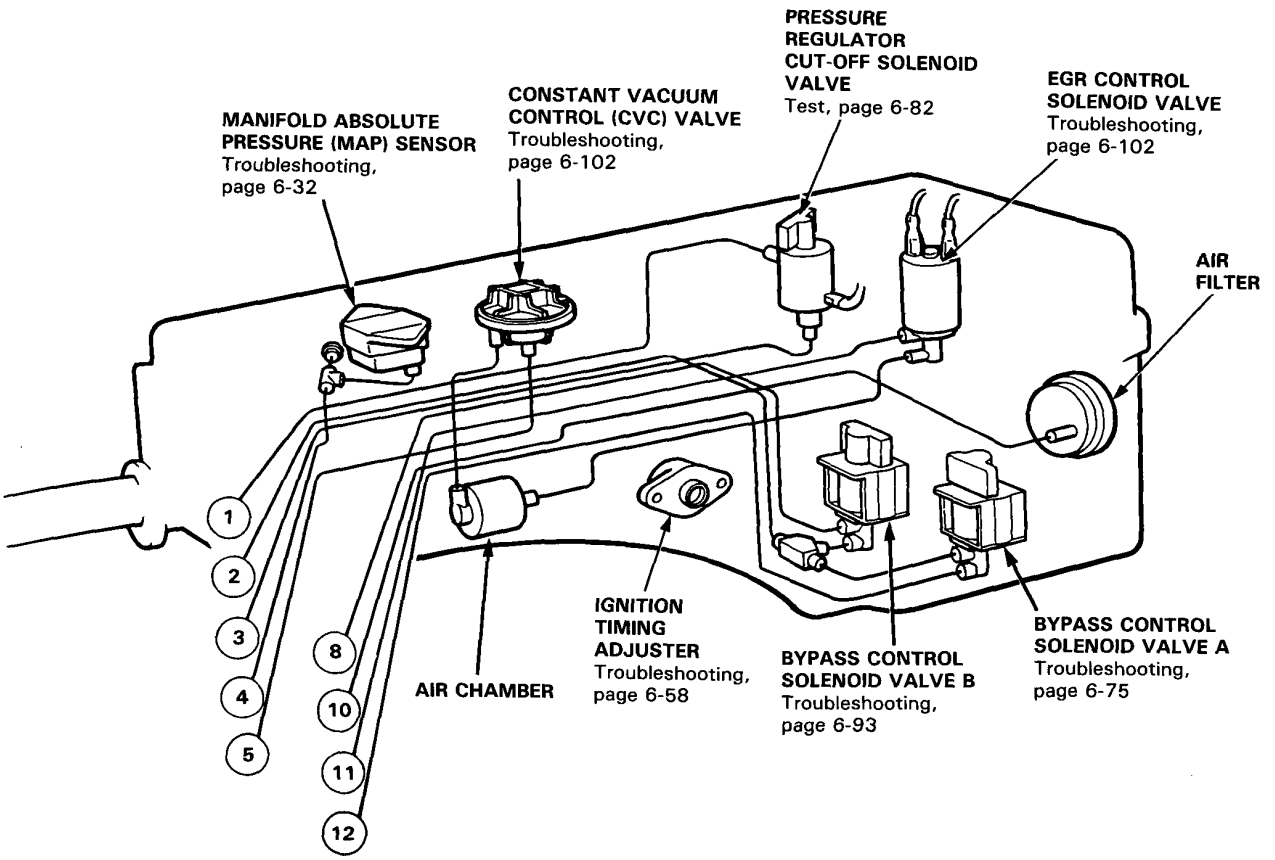
PRESSURE REGULATOR CUT-OFF SOLENOID VALVE
Test, page 6-82
EGR CONTROL SOLENOID VALVE
Troubleshooting, page 6-102
CONSTANT VACUUM CONTROL (CVC) VALVE
Troubleshooting, page 6-102
MANIFOLD ABSOLUTE PRESSURE (MAP) SENSOR
Troubleshooting, page 6-32
AIR FILTER
1
2
3
4
5
8
10
11
12
AIR CHAMBER
IGNITION TIMING ADJUSTER
Troubleshooting, page 6-58
BYPASS CONTROL SOLENOID VALVE B
Troubleshooting, page 6-93
BYPASS CONTROL SOLENOID VALVE A
Troubleshooting, page 6-75

KB, KF

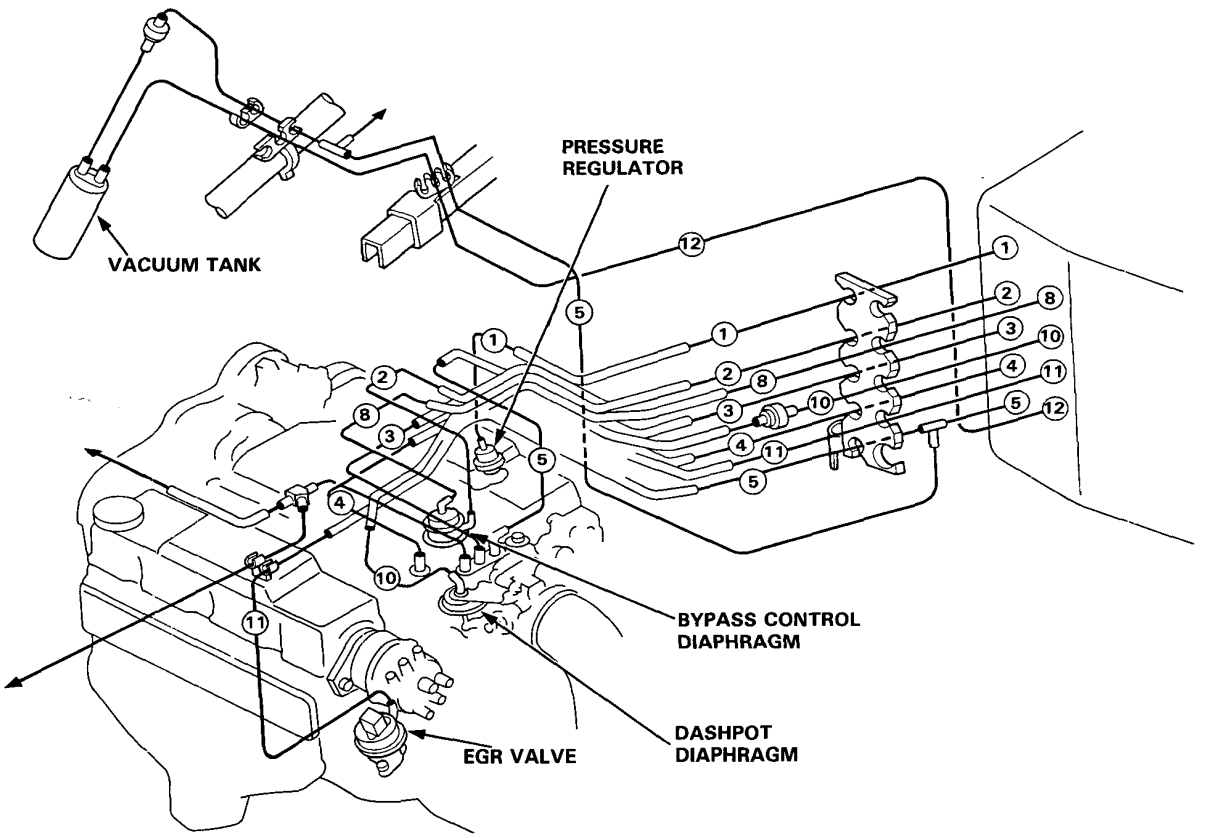
PRESSURE
REGULATOR
VACUUM TANK
BYPASS CONTROL
DIAPHRAGM
DASHPOT
DIAPHRAGM
EGR VALVE

Control Box

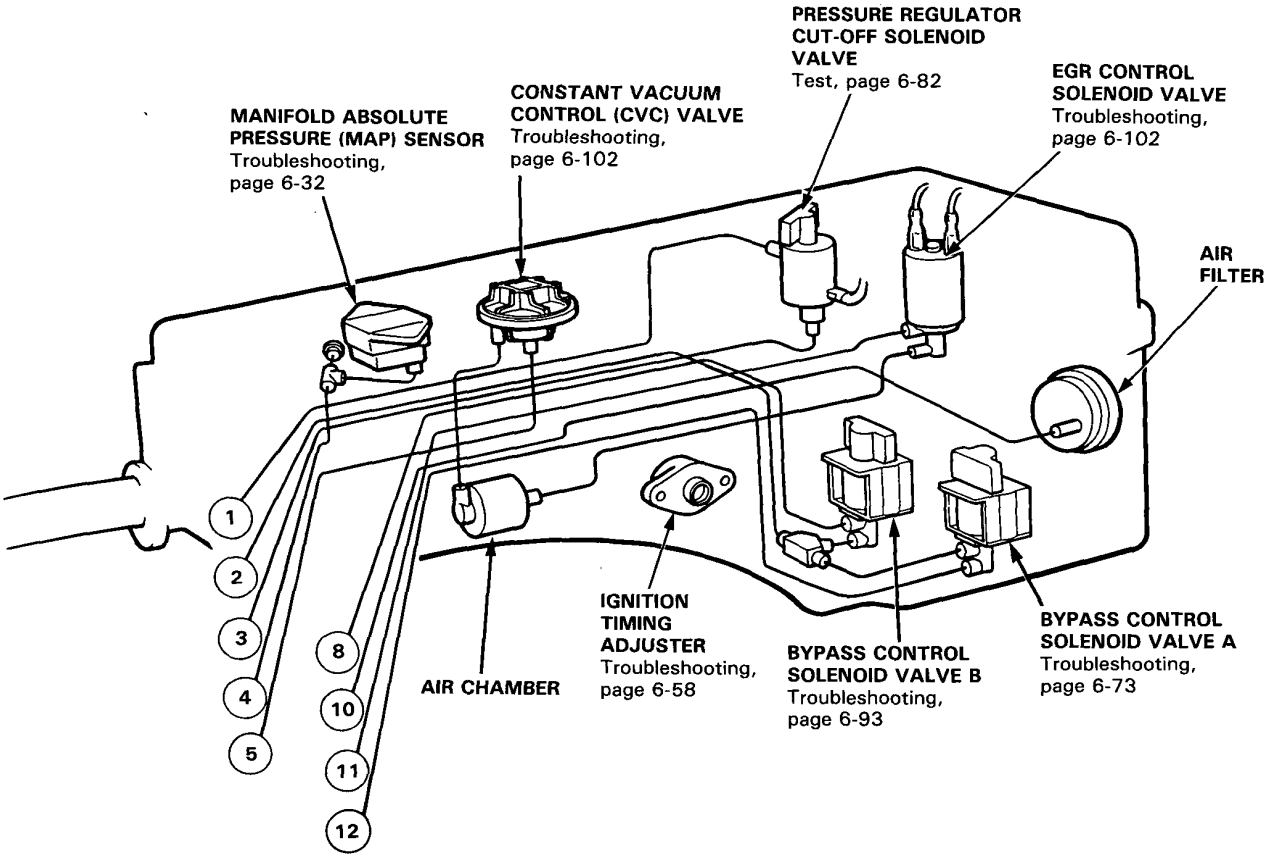
PRESSURE REGULATOR CUT-OFF SOLENOID VALVE
Test, page 6-82
EGR CONTROL SOLENOID VALVE
Troubleshooting, page 6-102
CONSTANT VACUUM CONTROL (CVC) VALVE
Troubleshooting, page 6-102
MANIFOLD ABSOLUTE PRESSURE (MAP) SENSOR
Troubleshooting, page 6-32
AIR FILTER
1
2
3
4
5
8
10
11
12
AIR CHAMBER
IGNITION TIMING ADJUSTER
Troubleshooting, page 6-58
BYPASS CONTROL SOLENOID VALVE B
Troubleshooting, page 6-93
BYPASS CONTROL SOLENOID VALVE A
Troubleshooting, page 6-73

Vacuum Connections

KG, KX

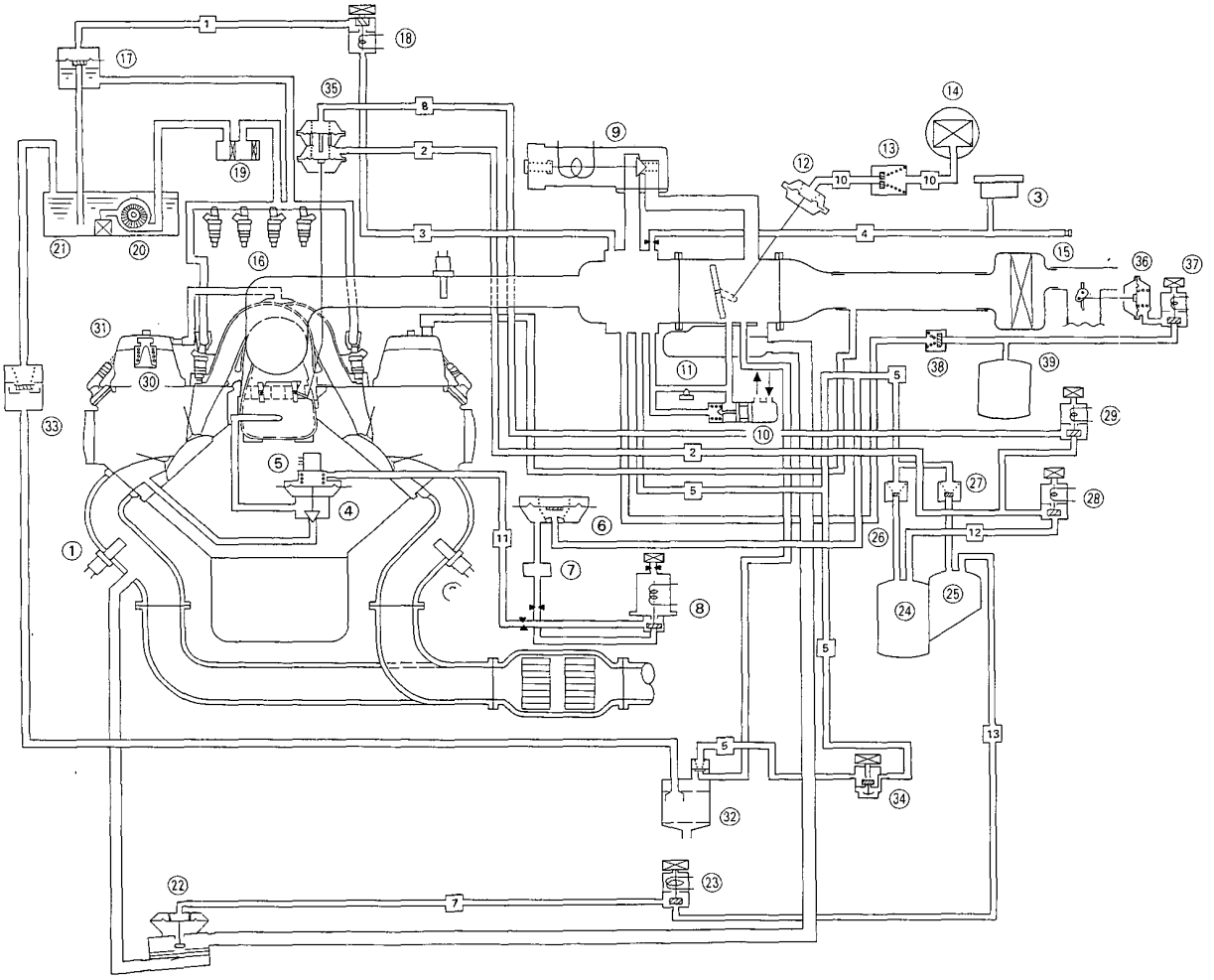

① FRONT OXYGEN (O_2) SENSOR
② REAR OXYGEN (O_2) SENSOR
③ MANIFOLD ABSOLUTE PRESSURE (MAP) SENSOR
④ EGR VALVE
⑤ EGR VALVE LIFT SENSOR
⑥ CONSTANT VACUUM CONTROL (CVC) VALVE
⑦ AIR CHAMBER
⑧ EGR CONTROL SOLENOID VALVE
⑨ ELECTRONIC AIR CONTROL VALVE (EACV)
⑩ FAST IDLE VALVE
⑪ IDLE ADJUSTING SCREW
⑫ DASHPOT DIAPHRAGM
⑬ DASHPOT CHECK VALVE
⑭ AIR FILTER
⑮ AIR CLEANER
⑯ FUEL INJECTOR
⑰ PRESSURE REGULATOR
⑱ PRESSURE REGULATOR CUT-OFF SOLENOID VALVE
⑲ FUEL FILTER
⑳ FUEL PUMP
㉑ FUEL TANK
㉒ AIR SUCTION VALVE
㉓ AIR SUCTION CONTROL SOLENOID VALVE
㉔ VACUUM TANK A
㉕ VACUUM TANK B
㉖ CHECK VALVE A
㉗ CHECK VALVE B
㉘ BYPASS CONTROL SOLENOID VALVE A
㉙ BYPASS CONTROL SOLENOID VALVE B
㉚ PCV VALVE
㉛ BREATHER CHAMBER
㉜ CHARCOAL CANISTER
㉝ TWO-WAY VALVE
㉞ THERMOVALVE
㉟ BYPASS CONTROL DIAPHRAGM
㊱ VACUUM CONTROL DIAPHRAGM
㊲ RESONATOR CONTROL SOLENOID VALVE
㊳ CHECK VALVE C
㊴ SURGE TANK

KB, KE, KF

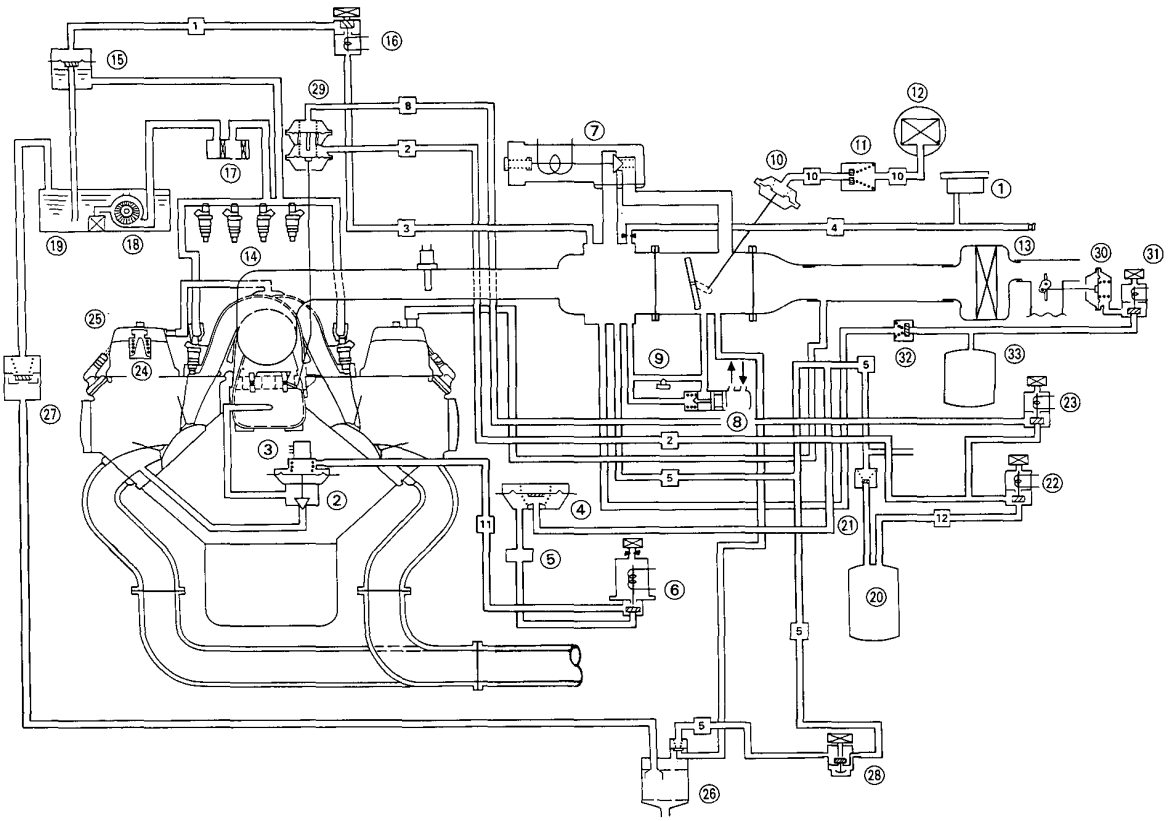

① MANIFOLD ABSOLUTE PRESSURE (MAP) SENSOR
② EGR VALVE
③ EGR VALVE LIFT SENSOR
④ CONSTANT VACUUM CONTROL (CVC) VALVE
⑤ AIR CHAMBER
⑥ EGR CONTROL SOLENOID VALVE
⑦ ELECTRONIC AIR CONTROL VALVE (EACV)
⑧ FAST IDLE VALVE
⑨ IDLE ADJUSTING SCREW
⑩ DASHPOT DIAPHRAGM
⑪ DASHPOT CHECK VALVE
⑫ AIR FILTER
⑬ AIR CLEANER
⑭ FUEL INJECTOR
⑮ PRESSURE REGULATOR
⑯ PRESSURE REGULATOR CUT-OFF SOLENOID VALVE
⑰ FUEL FILTER
⑱ FUEL PUMP
⑲ FUEL TANK
⑳ VACUUM TANK A
㉑ CHECK VALVE A
㉒ BYPASS CONTROL SOLENOID VALVE A
㉓ BYPASS CONTROL SOLENOID VALVE B
㉔ PCV VALVE
㉕ BREATHER CHAMBER
㉖ CHARCOAL CANISTER
㉗ TWO-WAY VALVE
㉘ THERMOVALVE
㉙ BYPASS CONTROL DIAPHRAGM
㉚ RESONATOR CONTROL DIAPHRAGM
㉛ RESONATOR CONTROL SOLENOID VALVE
㉜ CHECK VALVE C
㉝ SURGE TANK

Vacuum Connections

KQ

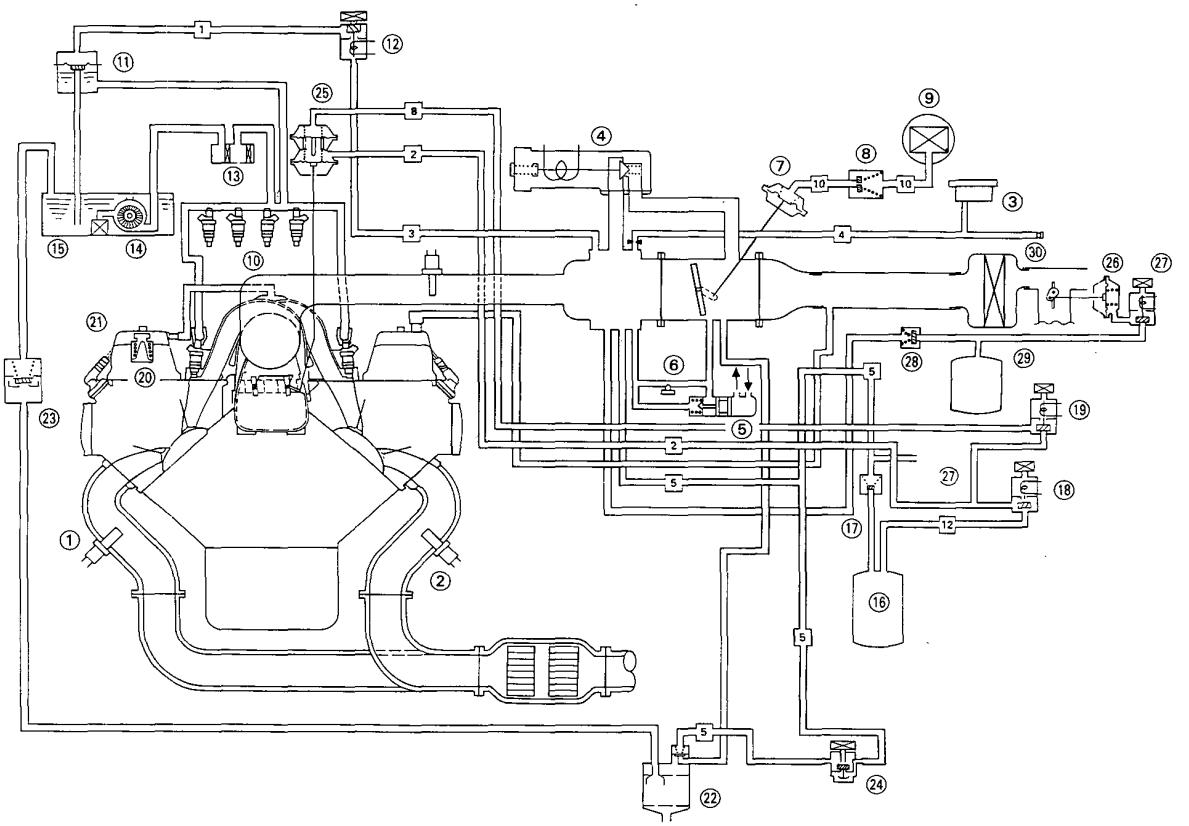

① FRONT OXYGEN (O_2) SENSOR
② REAR OXYGEN (O_2) SENSOR
③ MANIFOLD ABSOLUTE PRESSURE (MAP) SENSOR
④ ELECTRONIC AIR CONTROL VALVE (EACV)
⑤ FAST IDLE VALVE
⑥ IDLE ADJUSTING SCREW
⑦ DASHPOT DIAPHRAGM
⑧ DASHPOT CHECK VALVE
⑨ AIR FILTER
⑩ FUEL INJECTOR
⑪ PRESSURE REGULATOR
⑫ PRESSURE REGULATOR CUT-OFF SOLENOID VALVE
⑬ FUEL FILTER
⑭ FUEL PUMP
⑮ FUEL TANK
⑯ VACUUM TANK A
⑰ CHECK VALVE A
⑱ BYPASS CONTROL SOLENOID VALVE A
⑲ BYPASS CONTROL SOLENOID VALVE B
⑳ PCV VALVE
㉑ BREATHER CHAMBER
㉒ CHARCOAL CANISTER
㉓ TWO-WAY VALVE
㉔ THERMOVALVE
㉕ BYPASS CONTROL DIAPHRAGM
㉖ RESONATOR CONTROL DIAPHRAGM
㉗ RESONATOR CONTROL SOLENOID VALVE
㉘ CHECK VALVE C
㉙ SURGE TANK
㉚ AIR CLEANER

KG, KX

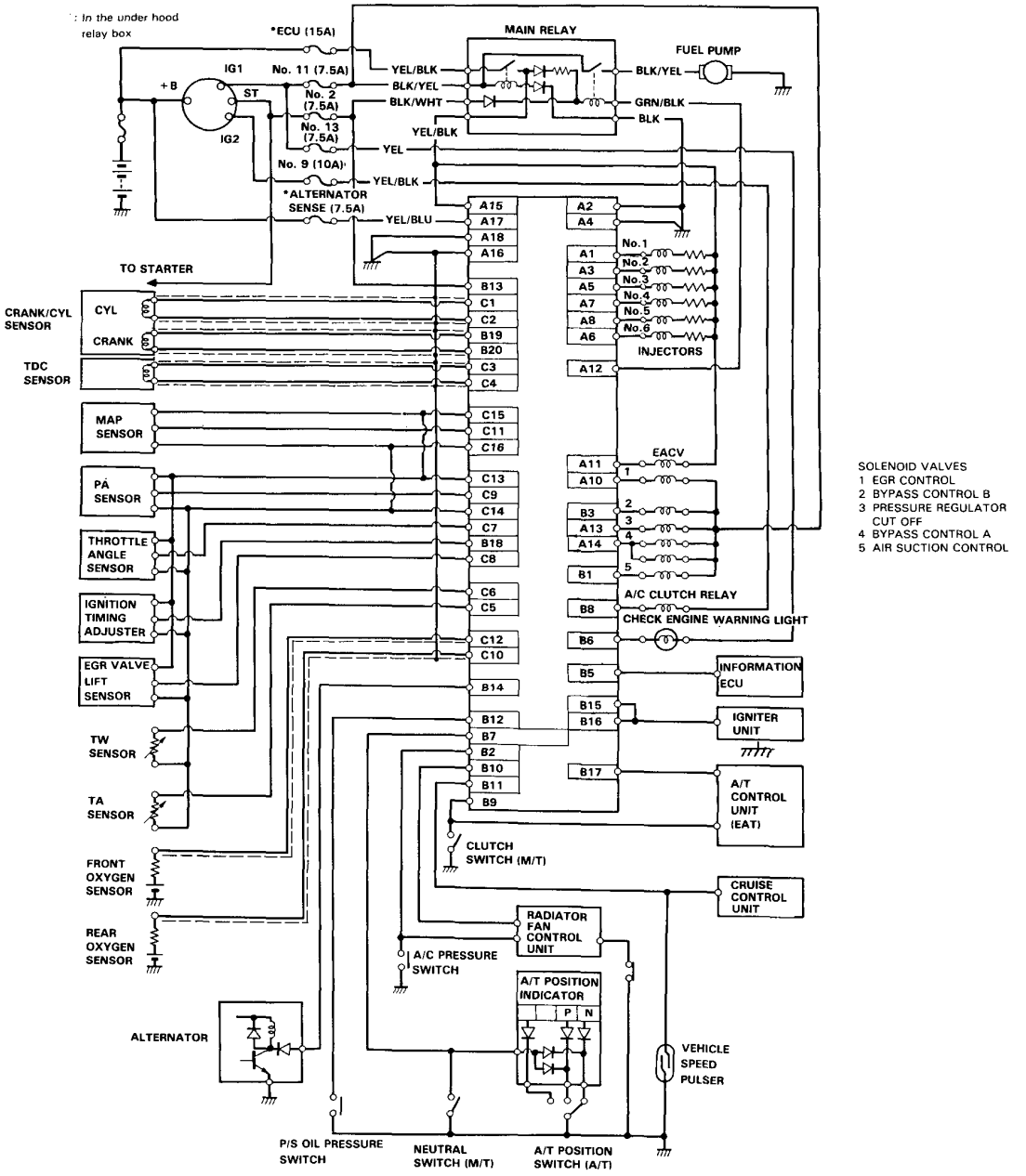

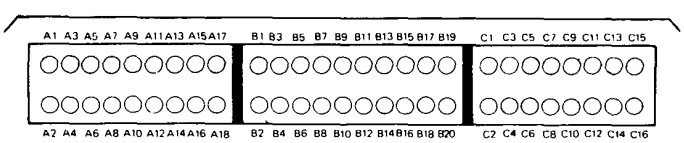

TERMINAL LOCATION

KB, KE, KF

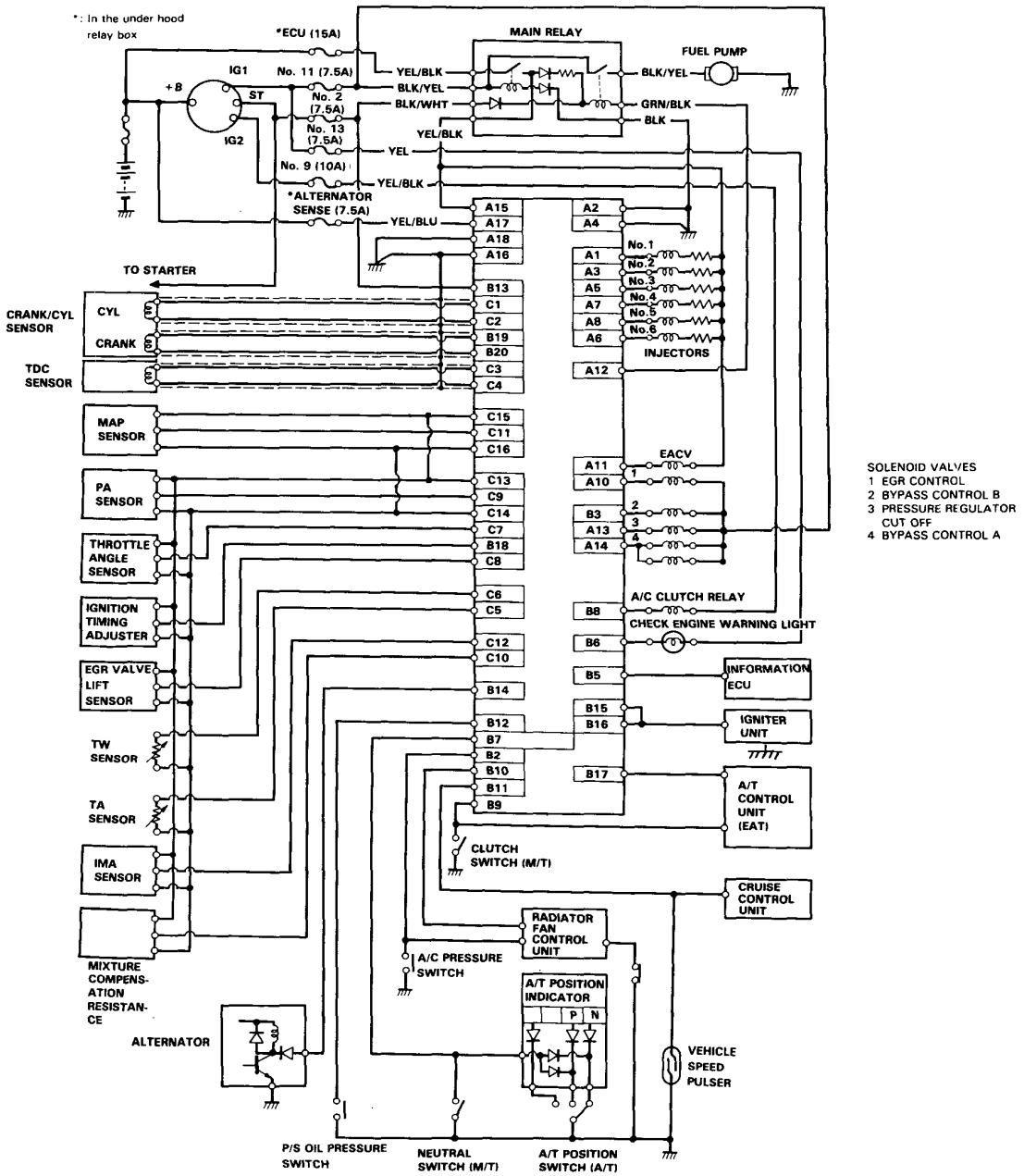

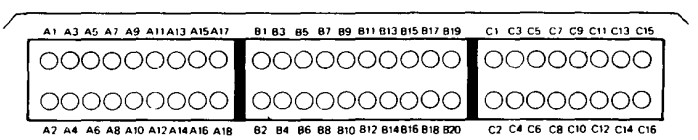

TERMINAL LOCATION

KQ

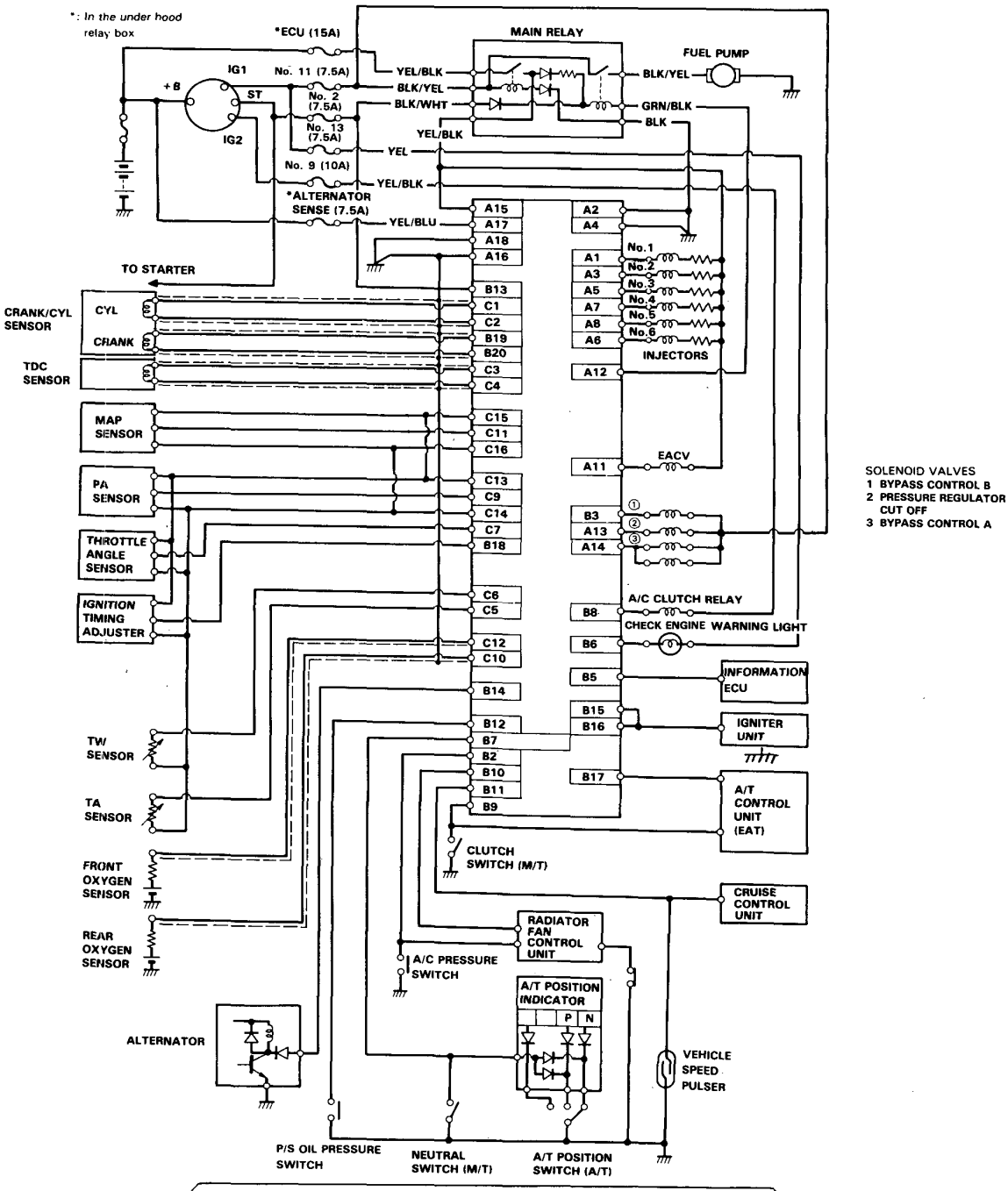

TERMINAL LOCATION

Symptom-to-System Chart

NOTE: Across each row in the chart, the systems that could be sources of a symptom are ranked in the order they should be inspected starting with ①. Find the symptom in the left column, read across to the most likely source, then refer to the page listed at the top of that column. If inspection shows the system is OK, try the next most likely system ②, etc.

PAGE / SYSTEM / SYMPTOM		PGM-FI								
		ELEC-TRONIC CONTROL UNIT	OXYGEN SENSOR (KG, KX, KQ)	MIXTURE COMPENSATION RESISTANCE (Except KG, KX, KQ)	MANIFOLD ABSOLUTE PRESSURE SENSOR	CRANK/ CYL SENSOR	COOLANT TEMPERA TURE SENSOR	THROTTLE ANGLE SENSOR	TDC SENSOR	INTAKE AIR TEMPERA-TURE SENSOR
		25, 26	28	30	32, 34	36, 38	40	42	44	48
CHECK ENGINE WARNING LIGHT TURNS ON		☐ or								
SELF-DIAGNOSIS INDICATOR (RED LED) BLINKS		⓪ or ✳	① or ②	②	③ or ⑤	④ or ⑧	⑥	⑦	⑨	⑩
ENGINE WON'T START		②								
DIFFICULT TO START ENGINE WHEN COLD		(BU)					①		③	
IRREGULAR IDLING	WHEN COLD FAST IDLE OUT OF SPECIFIC	(BU)					②	③		③
	ROUGH IDLE	(BU)	③	③	②	③		③		③
	WHEN WARM RPM TOO HIGH	(BU)			③					
	WHEN WARM PRM TOO LOW	(BU)			③					
FREQUENT STALLING	WHILE WARMING UP	(BU)			②	③	③	③		
	AFTER WARMING UP	(BU)			②	③		②		
POOR PERFORM-ANCE	MISFIRE OR ROUGH RUNNING	(BU)	③	③	②	③		③		
	FAILS EMISSION TEST	(BU)	②	②	①	③	③			
	LOSS OF POWER	(BU)			③	③	③			

* CODE 16 or exceeds 18: count the number of blinks again. If the indicator is in fact blinking these codes, substitute a known—good ECU and recheck. If the indication goes away, replace the original ECU.

(BU): When the Check engine warning light and the self-diagnosis indicator are on, the back-up system is in operation. Substitute a known-good ECU and recheck. If the indication goes away, replace the original ECU.

NOTE: If there is abnormal air intake noise, check the resonator control system (page 6-105).

PGM-FI					IDLE CONTROL				EMISSION CONTROL	
IMA SENSOR (Except KG, KX, KQ)	ATMO-SPHERIC PRESSURE SENSOR	IGNITION OUTPUT SIGNAL	VEHICLE SPEED PULSER	IGNITION TIMING ADJUSTER	ELECTRONIC AIR CONTROL VALVE	OTHER IDLE CONTROLS	FUEL SUPPLY	AIR INTAKE	EGR CONTROL SYSTEM (Except KQ)	OTHER EMISSION CONTROLS
50	52	54	56	58	62	60	76	88	103	98
11	13	15	17	18	14				12	
		3			2		1			
						3				
	3					1				
3					1				3	3
	3				1	2		3		3
					1	3		2		
					1	3	3	2	3	
					2		3	3	1	
3		3					1		3	
2									2	2
	3		3				1	3	3	2

When the Check engine warning light has been reported on, turn the ignition on, pull down the passenger's side carpet from under the dashboard and observe the LED on the top of the ECU. The Red LED indicates a system failure code by blinking frequency.
(The Yellow LED is for idle speed adjustment and is not related to the following troubleshooting codes.)

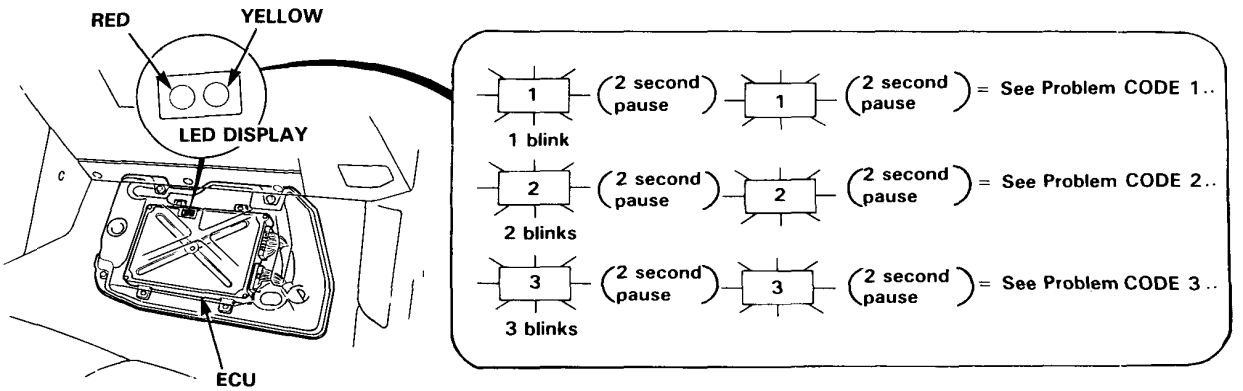

SELF-DIAGNOSIS INDICATOR BLINKS	SYSTEM INDICATED	PAGE
0	ECU	6-25, 26
1	FRONT OXYGEN CONTENT (KG, KX, KQ)	6-28
2	REAR OXYGEN CONTENT (KG, KX, KQ)	6-28
	MIXTURE COMPENSATION RESISTANCE (Except KG, KX, KQ)	6-30
3	MANIFOLD ABSOLUTE PRESSURE	6-32
5		6-34
4	CRANK ANGLE	6-36
6	COOLANT TEMPERATURE	6-40
7	THROTTLE ANGLE	6-42
8	TDC POSITION	6-44
9	No. 1 CYLINDER POSITION	6-38
10	INTAKE AIR TEMPERATURE	6-48
11	IMA (Except KG, KX, KQ)	6-50
12	EXHAUST GAS RECIRCULATION SYSTEM (Except KQ)	6-103
13	ATMOSPHERIC PRESSURE	6-52
14	ELECTRONIC IDLE CONTROL	6-62
15	IGNITION OUTPUT SIGNAL	6-54
17	VEHICLE SPEED PULSER	6-56
18	IGNITION TIMING ADJUSTMENT	6-58

CODE 16 or exceeds 18, count the number of blinks again, if the indicator is in fact blinking these codes, substitute a known-good ECU and recheck. If the indication goes away, replace the original ECU.
The Check engine warning light and ECU Red LED may come on, indicating a system problem, when, in fact, there is a poor or intermittent electrical connection. First, check the electrical connections, clean or repair connections if necessary.

If the inspection for a particular failure code requires the PGM-FI test harness, remove the right door sill molding, the small cover on the right kick panel, and pull the carpet back to expose the ECU. Unbolt the ECU bracket and disconnect the 7P connector from the Cooling Fan Timer Unit near the upper left corner of the ECU bracket. Connect the PGM-FI test harness. Then check the system according to the procedure described for the appropriate code(s) listed on the following pages.

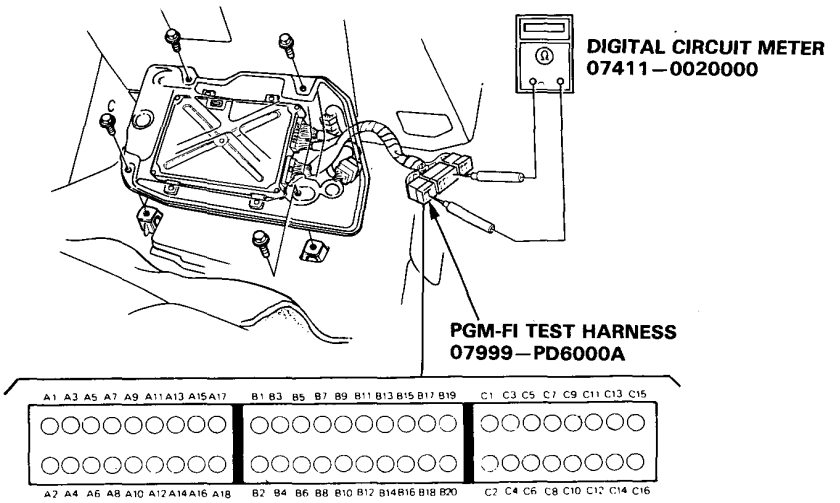

TERMINAL LOCATION

CAUTION :

- Puncturing the insulation on a wire can cause poor or intermittent electrical connections.
- **For testing at connectors other than the PGM-FI test harness, bring the tester probe into contact with the terminal *from the connector side of wire harness connectors in the engine compartment. For female connectors, just touch* lightly with the tester probe and do not insert the probe.**

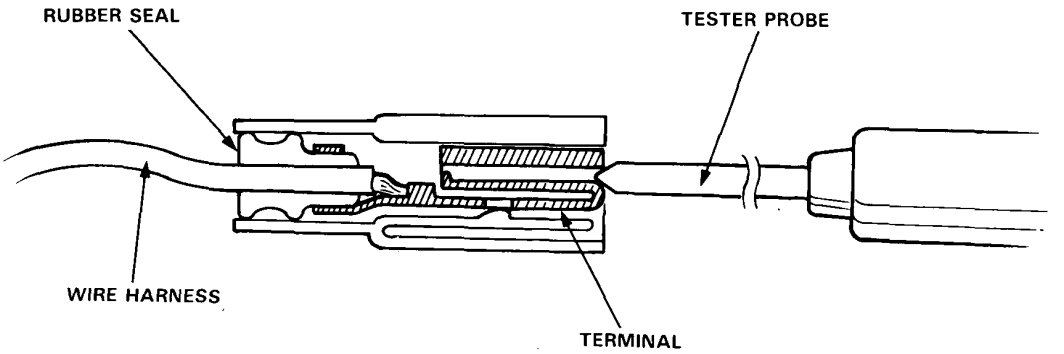

(cont'd)

Troubleshooting Procedures

A flow chart is designed to be used from start to final repair. It's like a map showing you the shortest distance. But beware; if you go off the "map" anywhere but a "stop" symbol, you can easily get lost.

START (bold type): Describes the conditions or situation to start a troubleshooting flow chart.

ACTION: Asks you to do something; perform a test, set up a condition, etc.

DECISION: Asks you about the result of an action by giving an "answer" and asking did you get the same answer: Yes or No.

STOP: The end of a series of actions and decisions, describes a final repair action and sometimes directs you to an earlier part of the flow to confirm your repair.

NOTE:

- The term "Intermittent Failure" is used several times in these charts. It simply means a system may have had a failure, but it checks out OK through all your tests. You may need to road test the car to reproduce the failure or if the problem was a loose connection, you may have unknowingly solved it while doing the tests.
- "Open" and "Short" are common electrical terms. An open is a break in a wire or at a connection. A short is an accidental connection of a wire to ground. In simple electronics, this usually means something won't work at all. In complex electronics (like electronic control units), this can sometimes mean something works, but not the way it's supposed to.
- If the electrical readings are not as specified when using the system checker harness, check the checker harness connections before proceeding.

Troubleshooting Flow Chart —— ECU

Check engine warning light isn't on for 2 seconds after ignition is first turned on.

Is oil pressure warning light on?

- NO → Inspect No. 13 fuse.
  - Is No. 13 fuse OK?
    - NO → Replace fuse.
    - YES → Repair open in YEL wire between No. 13 fuse and combination meter.
- YES ↓

Turn the ignition switch OFF.

Connect the PGM-FI test harness between the ECU and connector (page 6-23).

Connect B6 terminal to body ground.

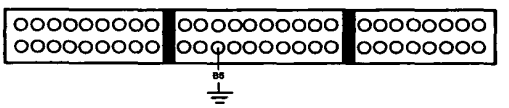

Turn the ignition switch ON.

Is Check engine warning light on?

- NO → – Replace warning light bulb.
  – Repair open in BLU wire between ECU (B6) and combination meter.
- YES ↓

Connect the following terminals individually to B6: • A2, • A4

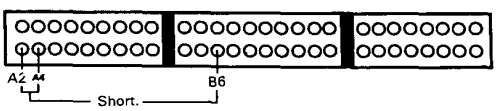

Is Check engine warning light on?

- NO → –Repair open in BLK wire between ECU (A2) and G101.
  –Repair open BLK wire between ECU (A4) and G101.
- YES ↓

Connect the following terminals individually to B6: • A16, • A18

Is Check engine warning light on?

- NO → –Repair open in BRN/BLK wire between ECU (A18) and G102.
  –Repair open in BRN/WHT wire between ECU (A16) and G102.
- YES ↓

Substitute a known-good ECU and recheck. If symptom/indication goes away, replace the original ECU.

(cont'd)

Troubleshooting Flow Chart — ECU (cont'd)

–Check engine warning light is on.
–Red LED doesn't blink.

Turn the ignition switch on.

Disconnect the 3P connector of each sensor one at a time:
- MAP sensor
- Throttle angle sensor
- EGR valve lift sensor (Except KQ)

Does Check engine warning light remain on?

NO → Replace the sensor that caused the light to go out upon its disconnection.

YES

Reconnect all connectors.

Disconnect the 3P connector of each sensor one at a time:
- Ignition timing adjuster
- PA sensor

Does Red LED indicate CODE for the sensor disconnected?

YES → Replace the sensor that caused the CODE to appear upon its disconnection.

NO

Reconnect the connector.

Turn the ignition switch OFF.

Connect the PGM-FI test harness between the ECU and connector (page 6-23). Disconnect "C" connector from ECU only, not the R. side wire harness.

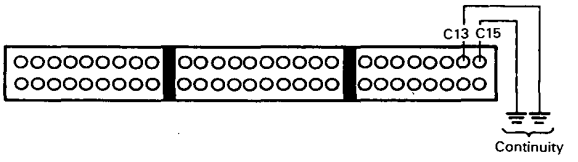

Check for continuity between the body ground and the following terminals individually: • C13, • C15

(To page 6-27)

(From page 6-26)

Does continuity exist?

YES → Repair short to ground in YEL/WHT wire between ECU (C15) and MAP sensor, or in YEL/WHT wire between ECU (C13) and the PA sensor, Ignition timing adjuster or EGR valve lift sensor. (Except KQ)

NO ↓

Reconnect "C" connector to ECU and disconnect "B" connector from the ECU only, not the R. side wire harness.

Turn the ignition switch ON.

Is Check engine warning light on?

YES → Repair short to ground in BLU wire between ECU (B6) and combination meter.

NO ↓

Connect the following terminals individually to B6: • A16, • A18

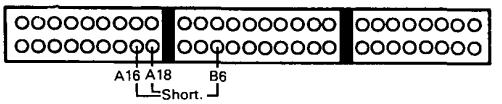

Is Check engine warning light on?

NO → –Repair open in BRN/BLK wire between ECU (A18) and G102.
–Repair open in BRN/WHT wire between ECU (A16) and G102.

YES ↓

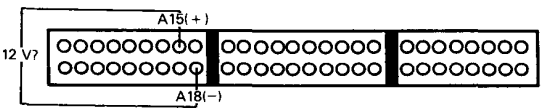

Measure voltage between A15 (+) terminal and A18 (–) terminal.

Is there battery voltage?

NO → –Repair open in YEL/BLK wire between ECU (A15) and main relay.
–Check main relay and wiring connectors at main relay (page 6-86).

YES ↓

Substitute a known-good ECU and recheck. If symptom/indication goes away, replace the original ECU.

Troubleshooting Flow Chart —— Oxygen Sensors (KG, KX, KQ)

Self-diagnosis Red LED blinks once: A problem in the Front Oxygen (O_2) Sensor circuit.

Self-diagnosis Red LED blinks twice: A problem in the Rear Oxygen (O_2) Sensor circuit.

–Check engine warning light has been reported on.
–Red LED indicates CODE 1 (Front O_2 sensor) or CODE 2 (Rear O_2 sensor).

Turn the ignition switch OFF.

Remove ALTERNATOR SENSE fuse in the under-hood relay box for 10 seconds to reset ECU.

Inspect fuel pressure at the fuel filter (page 6-77).

Is the fuel pressure above 34 psi with the pressure regulator vacuum hose connected?
- YES → Replace pressure regulator (page 6-83).
- NO ↓

Warm up engine to normal operating temperature (cooling fan comes on).

Hold engine at 1500 min^{-1} (rpm) for 15 minutes.
NOTE: Do not close throttle completely during this time.

Is Check engine warning light on?
- NO → Intermittent failure (test drive may be necessary.)
- YES ↓

Disconnect engine wire harness from indicated O_2 sensor.

Warm up engine to normal operating temperature again, then open the throttle wide open then close it.

Measure voltage between the connector terminal and body ground.

Is voltage above 0.6 V at wide open throttle and below 0.4 V when the throttle is quickly released?
- NO → Replace O_2 sensor.
- YES ↓

Stop engine.

(To page 6-29)

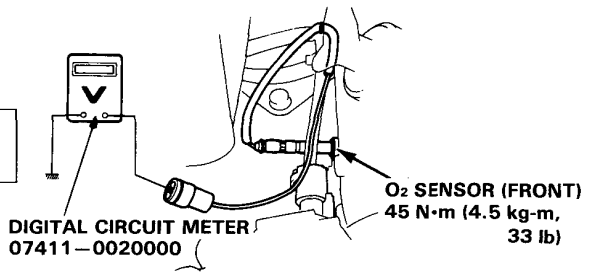

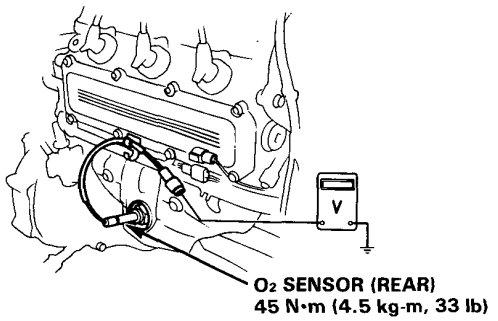

(From page 6-28)

Connect the PGM-FI test harness between the ECU and connector (page 6-23).

Restart and warm up engine to normal operating temperature, then open the throttle wide open then close it.

Measure voltage between:
- Front O_2 sensor C12 (+) and A18 (–) terminals
- Rear O_2 sensor C10 (+) and A18 (–) terminals

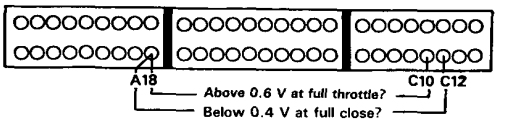

Is voltage above 0.6 V at wide open throttle and below 0.4 V when the throttle is quickly released?

NO → Repair wire between ECU and O_2 sensor for short or open:
- Front O_2 sensor WHT wire to C12
- Rear O_2 sensor RED/BLU wire to C10.

YES → Substitute a known-good ECU and recheck. If symptom/indication goes away, replace the original ECU.

Troubleshooting Flow Chart — Mixture Compensation Resistor [Except KG, KX, KQ]

Self-diagnosis Red LED indicator blinis twice: A problem in the Mixture Compensation Resistor circuit.

-Check engine warning light is on.
-Red LED indicates CODE 2.

Turn the ignition switch OFF.

Remove ALTERNATOR SENSE fuse in the under-hood relay box for 10 seconds to reset ECU.

Turn the ignition switch ON.

Is Check engine warning light on?

- NO → Intermittent failure (test drive may be necessary.)
- YES ↓

Turn the ignition switch OFF.

Disconnect the 4P connector on mixture compensation resistor that has only 3 wires.

Measure resistance between A terminal and C terminal on the resistor.

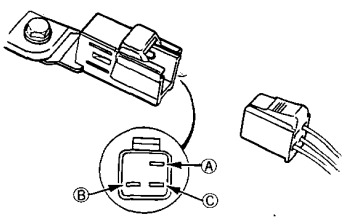

Is there 3—6 kΩ?

- NO → Replace mixture compensation resistor.
- YES ↓

Measure resistance between A and C terminals and between B and C terminals.

Does the sum of the two resistance checks equal 3—6 kΩ?

- NO → Replace mixture compensation resistor.
- YES ↓

Turn the ingition switch ON.

(To page 6-31)

(From page 6-30)

Measure voltage between YEL/WHT (+) terminal and GRN/WHT (−) terminal on the R. side wire harness.

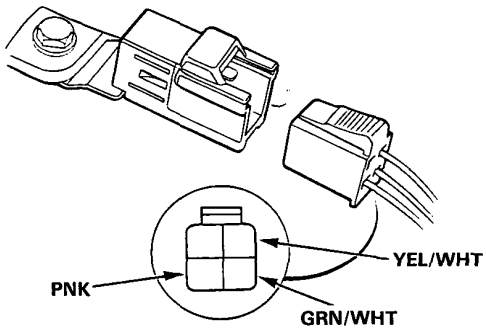

Is there approx. 5 V?

- NO → Measure voltage between YEL/WHT (+) terminal and body ground.
- YES → Turn the ignition switch OFF.

Turn the ignition switch OFF.

Connect the PGM-FI test between the ECU and connector (page 6-23).

Turn the ignition switch ON.

Measure voltage between C10 (+) terminal and C14 (−) terminal.

Is there 0.5−4.5 V?

- NO → Repair open or short in PNK wire between ECU (C10) and the resistor.
- YES → Substitute a known-good ECU and re-check. If symptom/indication goes away, replace the original ECU.

Is there approx. 5 V?

- YES → Repair open in GRN/WHT wire between ECU (C14) and the resistor.
- NO → Turn the ignition switch OFF.

Connect the PGM-FI test harness between the ECU and connector (page 6-23).

Turn the ignition switch ON.

Measure voltage between C13 (+) terminal and C12 (−) terminal.

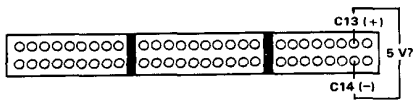

Is there approx. 5 V?

- YES → Repair open in YEL/WHT wire between ECU (C13) and the resistor.
- NO → Substitute a known-good ECU and re-check. If prescribed voltage is now available, replace the original ECU.

Troubleshooting Flow Chart —— MAP Sensor

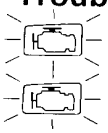

Self-diagnosis Red LED indicator blinks three times: Most likely an electrical problem in the Manifold Absolute Pressure (MAP) Sensor system.

Self-diagnosis Red LED indicator blinks five times: Most likely a mechanical problem (broken hose) in the Manifold Absolute Pressure (MAP) Sensor system.

–Engine is warm and running.
–Check engine warning light is on.
–Red LED indicates CODE 3.

Turn the ignition switch OFF.

Remove ALTERNATOR SENSE fuse in the under-hood relay box for 10 seconds to reset ECU.

Start the engine and allow to idle.

Is Check engine warning light on?

NO → Intermittent failure (test drive may be necessary.)

YES

Turn the ignition switch OFF.

Connect the test harness between the MAP sensor and wire harness.

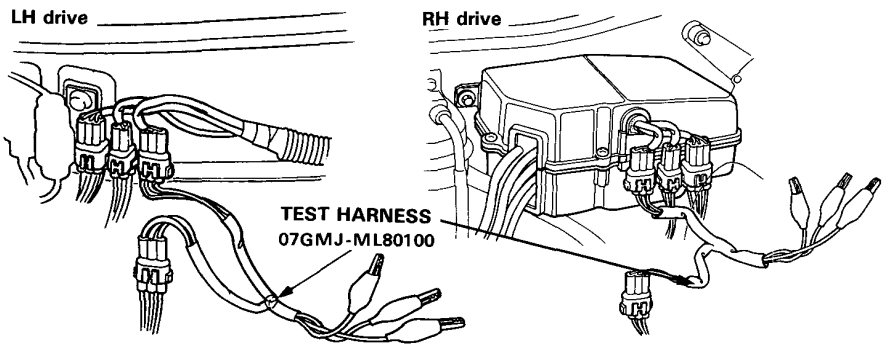

Turn the ignition switch ON.

Measure voltage between RED (+) terminal and GRN (–) terminal.

Is there approx. 5 V?

NO → Measure voltage between RED (+) terminal and body ground.

Is there approx. 5 V?

YES → Repair open in GRN/WHT wire between ECU (C16) and MAP sensor.

NO → Turn the ignition switch OFF.

(To page 6-33)

YES

Measure voltage between WHT (+) terminal and GRN (–) terminal.

(To page 6-33)

(From page 6-32)

Is there approx. 3 V?

NO

–Replace MAP sensor.
–Repair short in WHT wire between ECU (C11) and MAP sensor.

YES

Turn the ignition switch OFF.

Connect the PGM-FI test harness between the ECU and connector (page 6-23).

Turn the ignition switch ON.

Measure voltage between C11 (+) terminal and C16 (–) terminal.

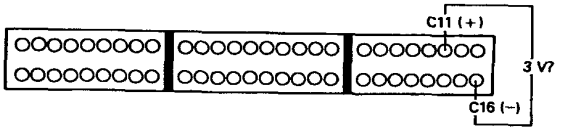

Is there approx. 3 V?

NO

Repair open in WHT wire between ECU (C11) and MAP sensor.

YES

Substitute a known-good ECU and recheck. If symptom/indication goes away, replace the original ECU.

(From page 6-32)

Connect the PGM-FI test harness between the ECU and connector (page 6-23).

Measure voltage between C15 (+) terminal and C16 (–) terminal with the ignition switch on.

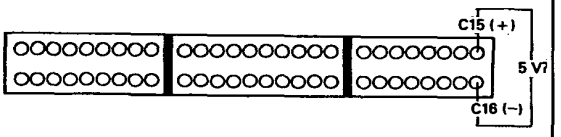

Is there approx. 5 V?

YES

Repair open in YEL/WHT wire between ECU (C15) and MAP sensor.

NO

Substitute a known-good ECU and recheck. If prescribed voltage is now available, replace the original ECU.

(cont'd)

Troubleshooting Flow Chart — MAP Sensor (cont'd)

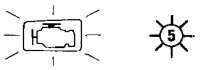

–Check engine warning light has been reported on.
–Red LED indicates CODE 5.

Turn the ignition switch OFF.

Remove ALTERNATOR SENSE fuse in the under-hood relay box for 10 seconds to reset ECU.

Start engine and keep engine rpm at idle.

Is Check engine warning light on?
Does Red LED indicate CODE 5?

NO → Intermittent failure (test drive may be necessary.)

YES

Stop engine.

Remove #4 hose from the vacuum hose manifold and connect a T. fitting from a vacuum gauge between the throttle body and the MAP sensor.

Start engine.

Is there vacuum?

NO → Repair as necessary.

YES

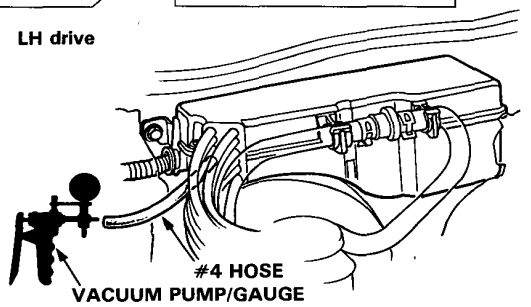

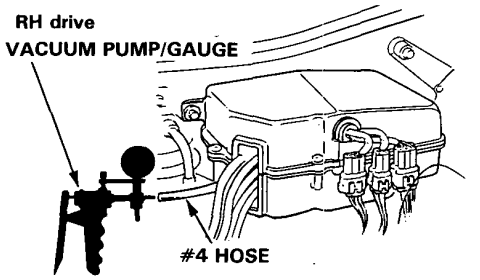

Connect vacuum pump to #4 hose and apply vacuum.

Does it hold vacuum?

NO → Replace #4 hose.

YES

(To page 6-35)

(From page 6-34)

Stop engine.

Connect the test harness between the MAP sensor and wire harness.

Turn the ignition switch ON.

Measure voltage between WHT (+) terminal and GRN (–) terminal.

Is there approx. 3V?

NO → Replace MAP sensor.

YES → Substitute a known-good ECU and recheck. If symptom/indication goes away, replace the original ECU.

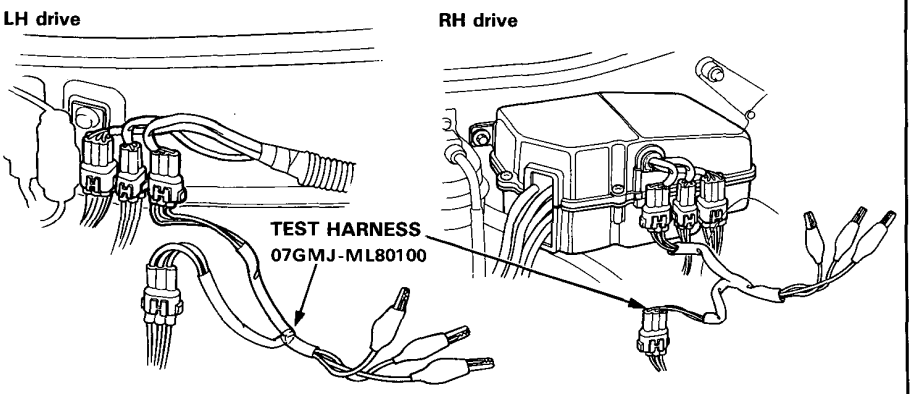

Troubleshooting Flow Chart — CRANK/CYL Sensor

Self-diagnosis Red LED indicator blinks four times: A problem in the CRANK circuit of the CRANK/CYL Sensor.

Self-diagnosis Red LED indicator blinks nine times: A problem in the CYL circuit of the CRANK/CYL Sensor.

–Check engine warning light has been reported on.
–Red LED indicates CODE 4.

Turn the ignition switch OFF.

Remove ALTERNATOR SENSE fuse in the under-hood relay box for 10 seconds to reset ECU.

Start engine.

Is Check engine warning light on?

NO → Intermittent failure (test drive may be necessary.)

YES

Stop engine.

Disconnect the 4P connector near the CRANK/CYL sensor.

Measure resistance between BLU/YEL terminal and BLU/GRN terminal.

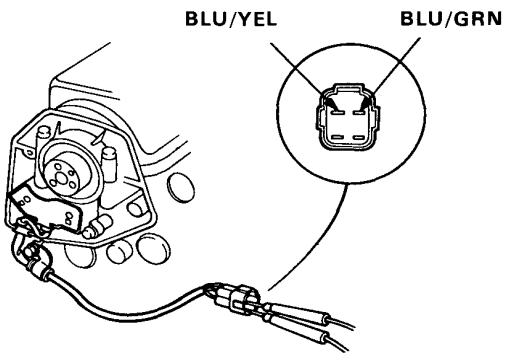

Is there 500–1,000 Ω?

NO → Replace CRANK/CYL sensor (page 6-39).

YES

Check for continuity to body ground on BLU/YEL terminal and BLU/GRN terminal individually.

(To page 6-37)

(From page 6-36)

Does continuity exist?

YES → Replace CRANK/CYL sensor (page 6-39).

NO

Reconnect the connector.

Connect the system checker harness only to the R. side wire harness, but not to the ECU (page 6-23).

Measure resistance between B19 terminal and B20 terminal.

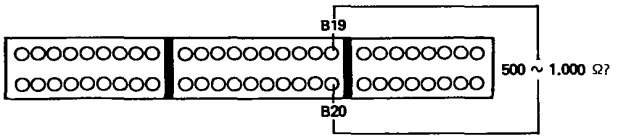

Is there 500–1,000 Ω?

NO → Repair open in BLU/YEL and/or BLU/GRN wires.

YES

Substitute a known-good ECU and recheck. If symptom/indication goes away, replace the original ECU.

(cont'd)

Troubleshooting Flow Chart — CRANK/CYL sensor (cont'd)

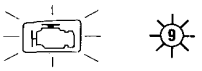

–Check engine warning light has been reported on.
–Red LED indicates CODE 9.

Turn the ignition switch OFF.

Remove ALTERNATOR SENSE fuse in the under-hood relay box for 10 seconds to reset ECU.

Start engine.

Is Check engine warning light on?
- NO → Intermittent failure (test drive may be necessary.)
- YES ↓

Stop engine.

Disconnect the 4P connector near the CRANK/CYL sensor.

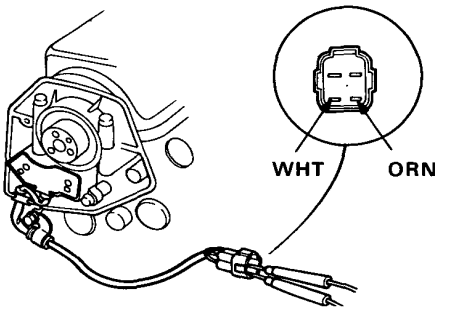

Measure resistance between ORN terminal and WHT terminal.

Is there 500—1,000 Ω?
- NO → Replace CRANK/CYL sensor (page 6-39).
- YES ↓

Check for continuity to body ground on ORN terminal and WHT terminal individually.

Does continuity exist?
- YES → Replace CRANK/CYL sensor (page 6-39).
- NO ↓

Reconnect the connector.

Connect the PGM-FI test harness only to the R. side wire harness, but not to the ECU (page 6-23).

(To page 6-39)

(From page 6-38)

Measure resistance between C1 terminal and C2 terminal.

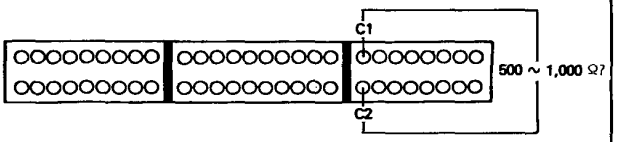

Is there 500–1,000Ω?

NO → Repair open in ORN and/or WHT wires.

YES → Substitute a known-good ECU and recheck. If symptom/indication goes away, replace the original ECU.

Removal:
1. Remove the cruise control actuator.
2. Remove the upper cover at the front side of the timing belt.
3. Remove the timing belt (section 6).
4. Remove 3 bolts and detach the pulley.
5. Remove 4 bolts and detach the front side cover plate of the timing belt.

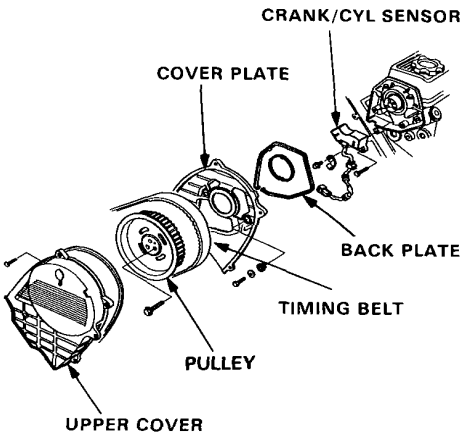

Installation:
1. Install the CRANK/CYL sensor on the cylinder head.
2. Align the cam pulley pin with the camshaft hole to install the cam pulley.

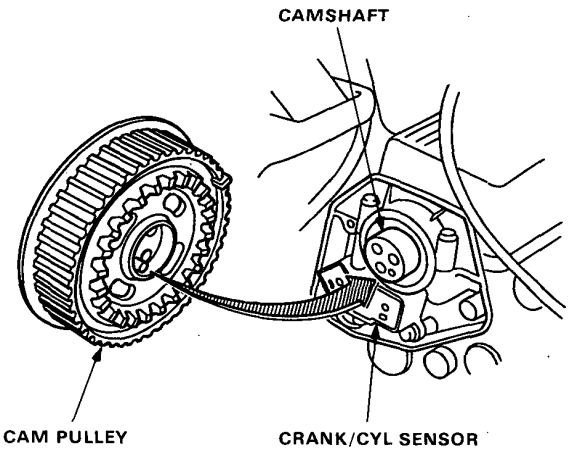

Troubleshooting Flow Chart — TW Sensor

Self-diagnosis Red LED indicator blinks six times: Most likely a problem in the Coolant Temperature (TW) Sensor circuit.

–Check engine warning light has been
–Red LED indicates CODE 6.

Turn the ignition switch OFF.

Remove ALTERNATOR SENSE fuse in the under-hood relay box for 10 seconds to reset ECU.

Turn the ignition switch ON.

Is Check engine warning light on?

NO → Intermittent failure. (test drive may be necessary.)

YES

Warm up engine to normal operating temperature (cooling fan comes on).

LH drive: Disconnect the C-103 and C-303 connectors, then disconnect C-102 and C-305 connectors.
RH drive: Disconnect the 6P connector between the relay box and battery.

LH drive: Measure resistance between RED/WHT at C-103 connector and GRN/WHT at C-102 connector.
RH drive: Measure resistance between RED/WHT and GRN/WHT.

Is there 200—400 Ω

NO → LH drive: Inspect open or short in RED/WHT wire between TW sensor and C-103 connector or GRN/WHT wire between TW sensor and C-102 connector. If wires are OK, replace TW sensor.
RH drive: Inspect open or short in RED/WHT wire between TW sensor and 6P connector or GRN/WHT wire between TW sensor and 6P connector. If wires are OK, replace TW sensor.

YES

LH drive: Measure voltage between RED/WHD (+) terminal at C-303 connector and body ground.
RH drive: Measure voltage between RED/WHT (+) terminal at engine room wire harness and body ground.

(To page 6-41)

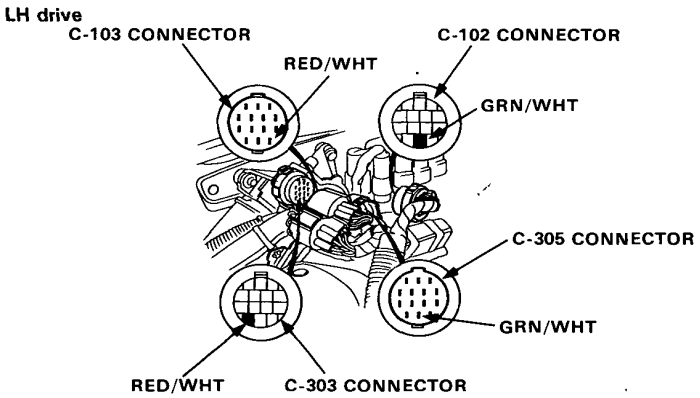

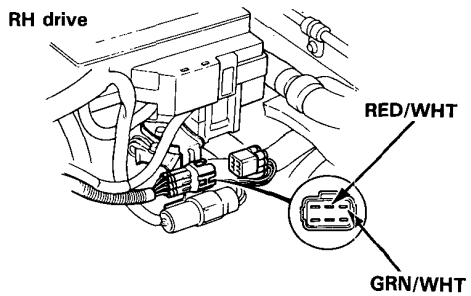

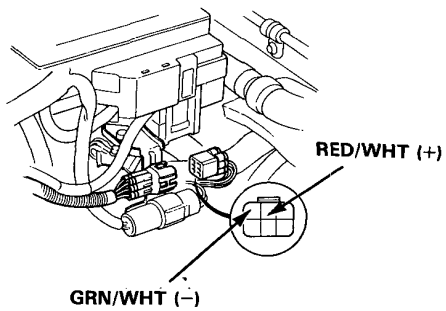

(From page 6-40)

Is there approx. 5V?

NO → Turn the ignition switch OFF.

YES

LH drive: Measure voltage between RED/WHT (+) terminal at C-303 connector and GRN/WHT (−) terminal at C-305 connector.
RH drive: Measure voltage between RED/WHT (+) terminal and GRN/WHT at engine room wire harness.

Is there approx. 5V?

NO → LH drive: Repair open in GRN/WHT wire between ECU (C14) and C-305 connector.
RH drive: Repair open in GRN/WHT wire between ECU (C14) and 6P connector of engine room wire harness.

YES

Substitute a known-good ECU and recheck. If symptom/indication goes away, replace the original ECU.

Connect the PGM-FI test harness between the ECU and connector (page 6-23).

Turn the ignition switch ON.

Measure voltage between C6 (+) terminal and C14 (−) terminal.

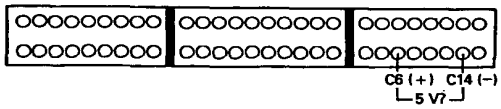

Is there approx. 5V?

YES → LH drive: Repair open in RED/WHT wire between ECU (C6) and C-303 connector.
RH drive: Repair open in RED/WHT wire between ECU (C6) and 6P connector of engine room wire harness.

NO

Disconnect "C" connector from the R. side wire harness only, not the ECU.

Measure voltage between C6 (+) terminal and C14 (−) terminal.

Is there approx. 5V?

YES → LH drive: Repair open in RED/WHT wire between ECU (C6) and C-303 connector.
RH drive: Repair short in RED/WHT wire between ECU (C6) and 6P connector of engine room wire harness.

NO

Substitute a known-good ECU and recheck. If prescribed voltage is now available, replace the original ECU.

Troubleshooting Flow Chart — Throttle Angle Sensor

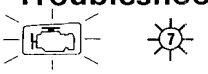

Self-diagnosis Red LED indicator blinks seven times: Most likely a problem in the Throttle Angle *Sensor circuit.*

–Engine is running
–Check engine warning light is on.
–Red LED indicates CODE 7

Turn the ignition switch OFF.

Remove ALTERNATOR SENSE fuse in the under-hood relay box for 10 seconds to reset ECU.

Start engine.

Is Check engine warning light on?

NO → Intermittent failure. (test drive may be necessary.)

YES

Turn the ignition switch OFF.

Connect the test harness between the throttle angle sensor and engine wire harness.

Turn the ignition switch ON.

Measure voltage between RED (+) terminal and GRN (–) terminal.

Is there approx. 5V?

NO → Measure voltage between RED (+) terminal and body ground.

Is there approx. 5V?

YES → Repair open in GRN/WHT wire between ECU (C14) and throttle angle sensor.

NO

Turn the ignition switch OFF.

Connect the PGM-FI test harness between the ECU and connector (page 6-23).

(To page 6-43)

YES

Measure voltage between WHT (+) terminal and GRN (–) terminal at fully open throttle.

(To page 6-43)

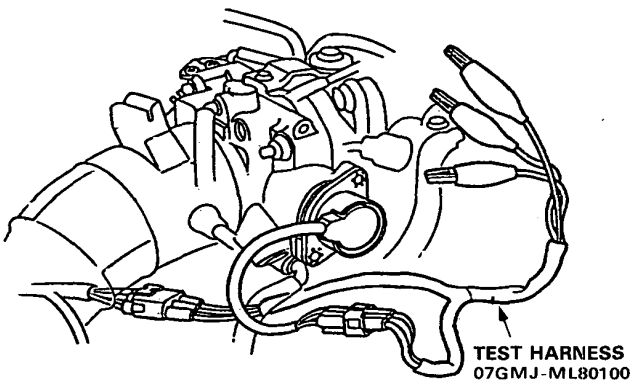

(From page 6-42)

Is there approx. 4 V?

NO

- Replace throttle angle sensor.
- Repair short in RED/YEL wire between ECU (C7) and throttle angle sensor.

YES

Turn the ignition switch OFF.

Connect the system checker harness between the ECU and connector (page 6-23).

Turn the ignition switch ON.

Measure voltage between C7 (+) terminal and C14 (–) terminal at fully open throttle.

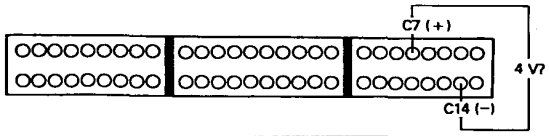

Is there approx. 4 V?

NO

Repair open in RED/YEL wire between ECU (C7) and throttle angle sensor.

YES

Substitute a known-good ECU and recheck. If symptom/indication goes away, replace the original ECU.

(From page 6-42)

Turn the ignition switch ON.

Measure voltage between C13 (+) terminal and C14 (–) terminal.

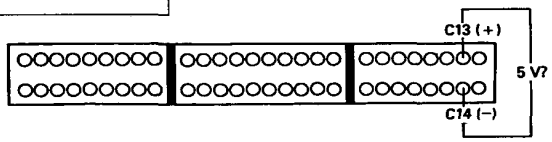

Is there approx. 5 V?

YES

Repair open in YEL/WHT wire between ECU (C13) and throttle angle sensor.

NO

Substitute a known-good ECU and recheck. If prescribed voltage is now available, replace the original ECU.

Troubleshooting Flow Chart — TDC Sensor

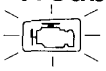

Self-diagnosis LED indicator blinks eight times: A problem in the TDC sensor.

– Check engine warning light has been reported on.
– LED indicates CODE 8.

Turn the ignition switch OFF.

Remove ALTERNATOR SENSE fuse in the underhood relay box for 10 seconds to reset ECU.

Start engine.

Is Check engine warning light on?

NO → Intermittent failure (test drive may be necessary).

YES

Stop engine.

Disconnect the 2P connector on the distributor.

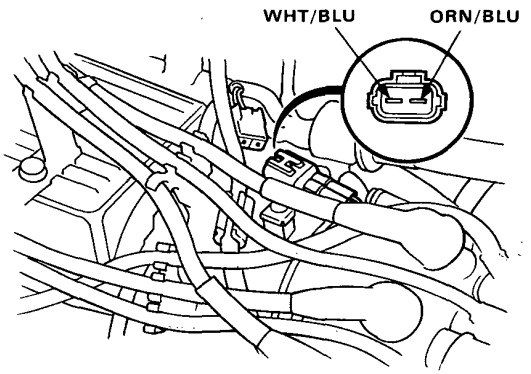

Measure resistance between WHT/BLU terminal and ORN/BLU terminal.

Is there 500 — 1,000 Ω?

NO → Replace TDC sensor (page 6-34).

YES

Check for continuity to body ground on WHT/BLU terminal and ORN/BLU terminal individually.

(To page 6-45)

(From page 6-44)

Does continuity exist?

YES → Replace TDC sensor (page 6-46).

NO

Reconnect the connector.

Connect the system checker harness only to the R. side wire harness, but not to the ECU (page 6-23).

Measure resistance between C3 terminal and C4 terminal.

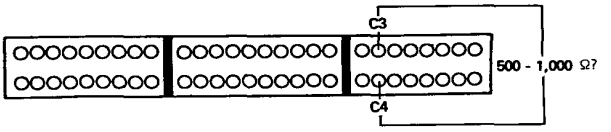

Is there 500 — 1,000 Ω?

NO → Repair open in ORN/BLU and/or WHT/BLU wires.

YES

Substitute a known-good ECU and recheck. If symptom/indication goes away, replace the original ECU.

(cont'd)

Troubleshooting Flow Chart —TDC Sensor (cont'd)

Removal:
1. Remove the distributor (section 23).
2. Remove the distributor cap from the distributor housing (TDC sensor).

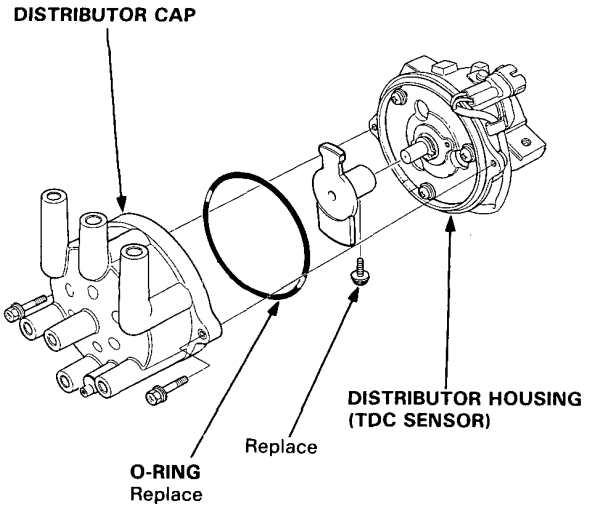

Installation:
1. Install a new O-ring.
2. Install the distributor cap to the distributor housing (TDC sensor).

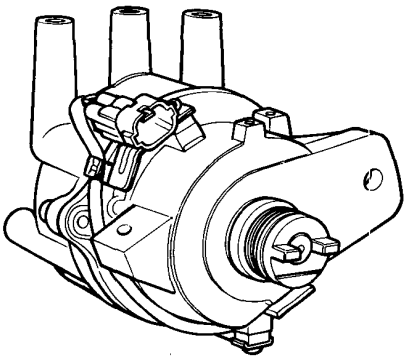

3. Install the distributor to the cylinder head (section 23).

Troubleshooting Flow Chart — TA Sensor

Self-diagnosis Red LED indicator blinks ten times: Most likely a problem in the Intake Air Temperature (TA) Sensor circuit.

– Check engine warning light is on.
– Red LED indicates CODE 10

Turn the ignition switch OFF.

Remove ALTERNATOR SENSE fuse in the under-hood relay box for 10 seconds to reset ECU.

Turn the ignition switch ON.

Is Check engine warning light on? — NO → Intermittent failure (test drive may be necessary.)

YES

Disconnect the 2P connector on the TA sensor.

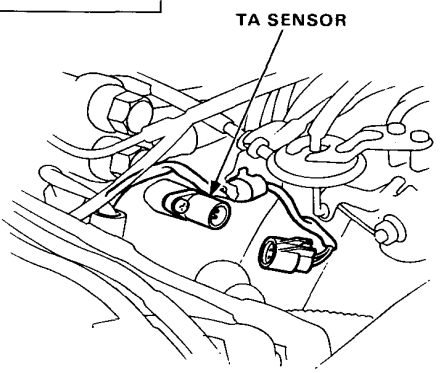

Measure resistance between the 2 terminals on the TA sensor.

Is there 1–4 kΩ? — NO → Replace TA sensor.

YES

Measure voltage between RED/BLK (+) terminal and body ground.

Is there approx. 5 V? — NO → Turn the ignition switch OFF. → Connect the PGM-FI test harness between the ECU and connector (page 6-23). → (To page 6-49)

YES

Measure voltage between RED/BLK (+) terminal and GRN/WHT (–) terminal.

(To page 6-49)

(From page 6-48)

Is there approx. 5 V?

NO → Repair open in GRN/WHT wire between ECU (C14) and TA sensor.

YES → Substitute a known-good ECU and recheck. If symptom/indication goes away, replace the original ECU.

(From page 6-48)

Turn the ignition switch ON.

Measure voltage between C5 (+) terminal and C14 (–) terminal.

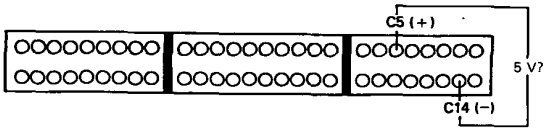

Is there approx. 5 V?

YES → Repair open in RED/-BLK wire between ECU (C5) and TA sensor.

NO → Disconnect "C" connector from the R. side wire harness only, not the ECU.

Measure voltage between C5 (+) terminal and C14 (–) terminal.

Is there approx. 5 V?

YES → Repair short in RED/-BLK wire between ECU (C5) and TA sensor.

NO → Substitute a known-good ECU and recheck. If prescribed voltage is now available, replace the original ECU.

Troubleshooting Flow Chart — IMA Sensor

Self-diagnosis Red LED indicator blinks eleven times: A problem in the IMA Sensor circuit.

- Check engine warning light is on.
- Red LED indicates CODE 11.

Turn the ignition switch OFF.

Remove ALTERNATOR SENSE fuse in the under-hood relay box for 10 seconds to reset ECU.

Turn the ignition switch ON.

Is Check engine warning light on?

- NO → Intermittent failure (test drive may be necessary.)
- YES ↓

Turn the ignition switch OFF.

Disconnect the 4P connector of the IMA sensor that has only 3 wires.

Measure resistance between YEL terminal and GRN terminal on IMA sensor harness.

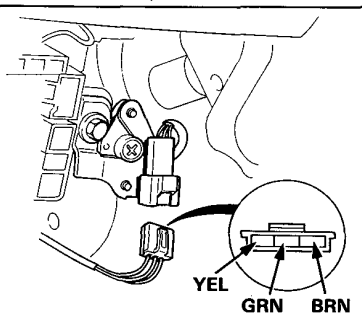

Is there 4–6 kΩ?

- NO → Replace IMA sensor.
- YES ↓

Measure resistance between YEL and BRN terminals and between GRN and BRN terminals.

Does the sum of the two resistance checks equal 4–6 kΩ?

- NO → Replace IMA sensor.
- YES ↓

(To page 6-51)

(From page 6-50)

Turn the ignition switch ON.

Measure voltage between YEL/WHT (+) terminal and GRN/WHT (−) terminal on the R. side wire harness.

Is there approx. 5 V?

NO → Measure voltage between YEL/WHT (+) terminal and body ground.

YES → Turn the ignition switch OFF.

Connect the PGM-FI test harness between the ECU and connector (page 6-23).

Turn the ignition switch ON.

Measure voltage between C12 (+) terminal and C14 (−) terminal.

Is there 0.5−4.5 V?

NO → *Repair open or short in* BRN wire between ECU (C12) and IMA sensor.

YES → Substitute a known-good ECU and re-check. If symptom/indication goes away, replace the original ECU.

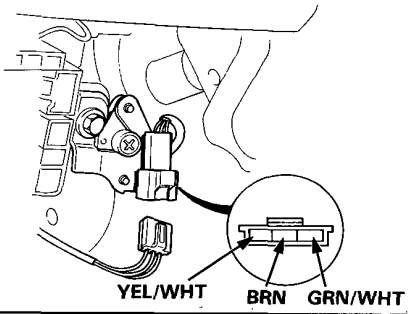

Is there approx. 5 V?

YES → Repair open in GRN/WHT wire between ECU (C14) and IMA sensor.

NO → Turn the ignition switch ON.

Connect the system PGM-FI test harness between the ECU and connector (page 6-23).

Turn the ignition switch OFF.

Measure voltage between C13 (+) terminal and C14 (−) terminal.

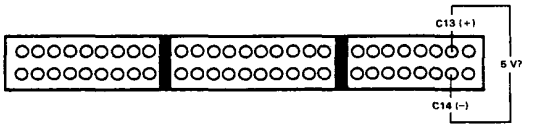

Is there approx. 5 V?

YES → Repair open in YEL/WHT wire between ECU (C13) and IMA sensor.

NO → Substitute a known-good ECU and re-check. If prescribed voltage is now available, replace the original ECU.

Troubleshooting Flow Chart — PA Sensor

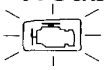

13 Self-diagnosis Red LED indicator blinks thirteen times: A problem in the Atmospheric Pressure (PA) Sensor circuit.

– Check engine warning light is on.
– Red LED indicates CODE 13.

Turn the ignition switch OFF.

Remove ALTERNATOR SENSE fuse in the under-hood relay box for 10 seconds to reset ECU.

Turn the ignition switch ON.

Is Check engine warning light on?

- NO → Intermittent failure (test drive may be necessary.)
- YES ↓

Turn the ignition switch OFF.

Connect the PGM-FI test harness between the ECU and connector (page 6-23).

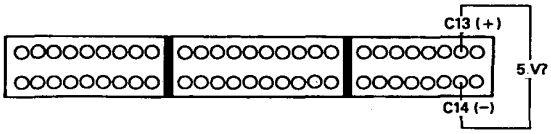

Turn the ignition switch ON.

Measure voltage between C13 (+) terminal and C14 (–) terminal.

Is there approx. 5V?

- NO → Substitute a known-good ECU and recheck. If prescribed voltage is now available replace the original ECU.
- YES ↓

Measure voltage between C9 (+) terminal and C14 (–) terminal.

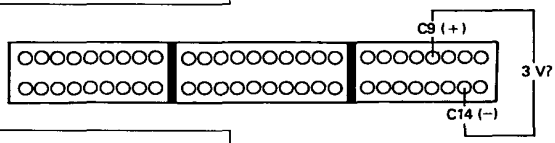

Is there approx. 3V?

- YES → Substitute a known-good ECU and recheck. If symptom/indication goes away, replace the original ECU.
- NO ↓

Disconnect the L. side wire harness from PA sensor.

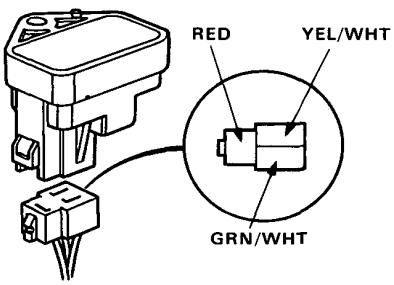

(To page 6-53)

(From page 6-52)

Measure voltage between C9 (+) terminal and C14 (–) terminal.

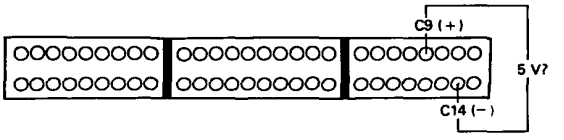

Is there approx. 5V?

NO → Repair short in RED wire between ECU (C9) and PA sensor.

YES

Measure voltage between YEL/-WHT (+) terminal and GRN/-WHT (–) terminal.

Is there approx. 5V?

NO → Measure voltage between YEL/-WHT (+) terminal and body ground.

Is there approx. 5V?

NO → Repair open in YEL/-WHT wire between ECU (C13) and PA sensor.

YES → Repair open in GRN/WHT wire between ECU (C14) and the sensor.

YES

Measure voltage between RED (+) terminal and GRN/WHT (–) terminal.

Is there approx. 5V?

NO → Repair open in RED wire between ECU (C9) and PA sensor.

YES

Replace PA sensor.

Troubleshooting Flow Chart — Ignition Output Signal

Self-diagnosis Red LED indicator blinks fifteen times: A problem in the Ignition Output Signal circuit.

– Check engine warning light is on.
– Red LED indicates CODE 15.

Turn the ignition switch OFF.

Remove ALTERNATOR SENSE fuse in the under-hood relay box for 10 seconds to reset ECU.

Turn the ignition switch ON.

Is Check engine warning light on?
- NO → Intermittent failure (test drive may be necessary.)
- YES ↓

Turn the ignition switch OFF.

Disconnect the 4P connector on the igniter unit.

Turn the ignition switch ON.

Measure voltage between the BLU (+) terminal and BLK (–) terminal.

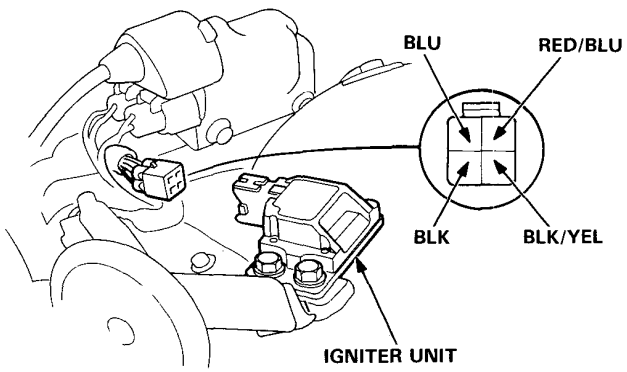

Is there battery voltage?
- NO → Measure voltage between the BLU (+) terminal and body ground.
  - Is there battery voltage?
    - NO → Repair open in the BLU wire.
    - YES → Repair open in the BLK wire between the igniter unit and G6.
- YES ↓

Measure voltage between the BLK/YEL (+) terminal and BLK (–) terminal on the 4P connector.

Is there battery voltage?
- NO → Repair open in the BLK/YEL wire between the igniter unit and ignition switch.
- YES ↓

Turn the ignition switch OFF.

(To page 6-55)

(From page 6-54)

Connect the PGM-FI test harness between the ECU and connector (page 6-23).

Reconnect the 4P connector on the igniter unit.

Turn the ignition switch ON.

Measure voltage individually between B15(+), B16(+) terminals and A18(-) terminal.

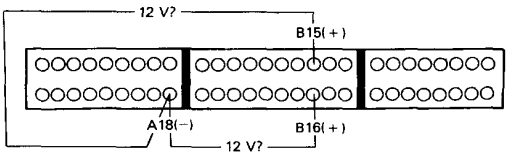

Is there battery voltage?

YES → Substitute a known-good ECU and recheck. If symptom/indication goes away, replace the original ECU.

NO

Disconnect the 4P connector on the igniter unit and the system checker harness only to the ECU.

Check for continuity of RED/BLU wire between the ECU and the igniter unit.

Does continuity exist?

NO → Repair open in the RED/BLU wire.

YES

Check for continuity to body ground on RED/BLU wire on the 4P connector.

Does continuity exist?

NO → Replace the igniter unit.

YES

Repair short in the RED/BLU wire. Then replace the igniter unit (Igniter unit may be broken in this case).

Troubleshooting Flow Chart — Vehicle Speed Pulser

Self-diagnosis Red LED indicator blinks seventeen times: A problem in the Vehicle Speed Pulser circuit.

– Check engine warning light is on.
– Red LED indicates CODE 17.

Drive vehicle and operate cruise control.

Does cruise control operate properly?

NO → See Cruise Control System Inspection (section 23).

YES

Connect the PGM-FI test harness between the ECU and connector (page 6-23). Disconnect "B" connector from the R. side wire harness.

Turn the ignition switch ON.

Measure voltage between B11 (+) terminal and A18 (–) terminal.

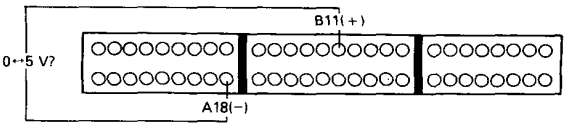

Is there approx. 5V?

NO → Substitute a known-good ECU and recheck. If prescribed voltage is now available replace the orignal ECU.

YES

Turn the ignition switch OFF.

Reconnect "B" connector to the R. side wire harness.

Block rear wheels and set the parking brake. Jack up the front of the car and support with safety stands.

WARNING **Block rear wheels before jacking up front of car.**

Turn the ignition switch ON.

Slowly rotate left front wheel and measure voltage between B11 (+) terminal and A18 (–) terminal.

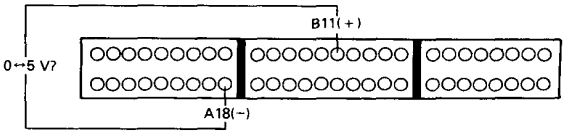

Does voltage pulse 0V and 5V?

NO → Repair open or short in YEL/RED wire between ECU (B16) and the speed pulser.

YES

(To page 6-57)

(From page 6-56)

Does voltage hold 0 V or 5 V?

5 V

–Repair open in the YEL/RED wire between ECU (B11) and the speed pulser.
–Faulty speed pulser.

0 V

Disconnect the connectors from the R. side wire harness only, not the ECU.

Measure voltage between B11 (+) terminal and A18 (–) terminal.

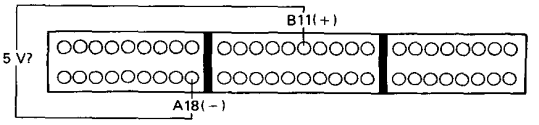

Is there approx. 5V?

YES

–Repair short in the YEL/RED wire between ECU (B11) and the speed pulser.
–Faulty speed pulser.

NO

Substitute a known-good ECU and recheck. If prescribed voltage is now available, replace the original ECU.

Troubleshooting Flow Chat —— Ignition Timing Adjuster

Self-diagnosis Red LED indicator blinks eighteen times: A problem in the Ignition Timing Adjuster circuit.

– Check engine warning light is on.
– Red LED indicates CODE 18.

Turn the ignition switch OFF.

Remove ALTERNATOR SENSE fuse in the under-hood relay box for 10 seconds to reset ECU.

Turn the ignition switch ON.

Is Check engine warning light on? — NO → Intermittent failure (test drive may be necessary.)

YES

Turn the ignition switch OFF.

Disconnect the 4P connector on the right side of the firewall that has only 3 wires.

Measure resistance between YEL/WHT terminal and GRN/WHT terminal on Ignition timing adjuster harness.

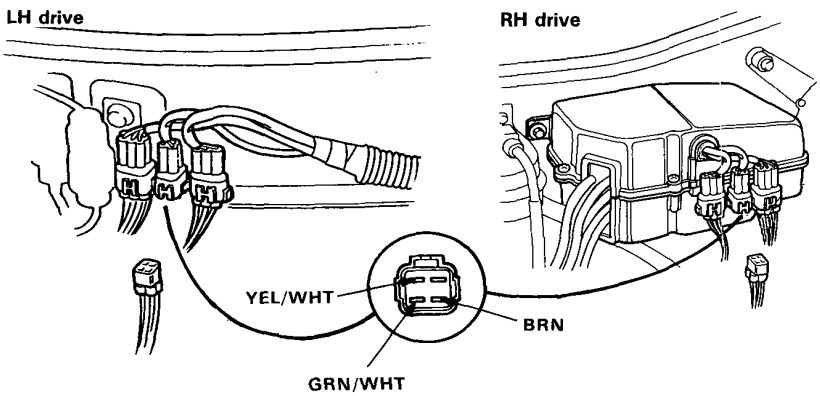

Is there 3—6 kΩ? — NO → Replace Ignition timing adjuster.

YES

Measure resistance between YEL/WHT and BRN terminals and between GRN/WHT and BRN terminals.

Does the sum of the two resistance checks equal 3.5–6.5 kΩ? — NO → Replace Ignition timing adjuster.

YES

Turn the ignition switch ON.

Measure voltage between YEL/WHT (+) terminal and GRN/WHT (–) terminal on the R. side wire harness.

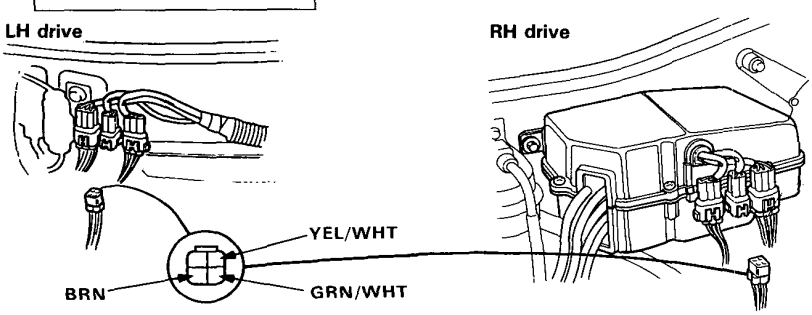

(To page 6-59)

(From page 6-58)

Is there approx. 5V?

NO → Measure voltage between YEL/WHT (+) terminal and body ground.

Is there approx. 5V?

YES → Repair open in GRN/WHT wire between ECU (C14) and Ignition timing adjuster.

NO → Turn the ignition switch OFF.

Connect the PGM-FI test harness between the ECU and connector (page 6-23).

Turn the ignition switch ON.

Measure voltage between C13 (+) terminal and C14 (–) terminal.

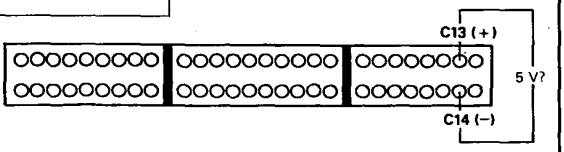

Is there approx. 5V?

YES → Repair open in YEL/WHT wire between ECU (C13) and Ignition timing adjuster.

NO → Substitute a known-good ECU and recheck. If prescribed voltage is now available, replace the original ECU.

YES → Turn the ignition switch OFF.

Connect the PGM-FI test harness between the ECU and connector (page 6-23).

Turn the ignition switch ON.

Measure voltage between B18 (+) terminal and C14 (–) terminal.

Is there 0.5—4.5V?

NO → Repair open or short in BRN wire between ECU (B18) and Ignition timing adjuster .

YES → Substitute a known-good ECU and recheck. If symptom/indication goes away, replace the original ECU.

Idle Control System

Symptom-to-Sub System Chart

NOTE: Across each row in the chart, the sub systems that could be sources of a symptom are ranked in the order they should be inspected, starting with ①. Find the symptom in the left column, read across to the most likely source, then refer to the page listed at the top of that column. If inspection shows the system is OK, try the next system ②, etc.

PAGE / SUB SYSTEM		IDLE ADJUSTING SCREW	ELECTRONIC AIR CONTROL VALVE	STARTER SIGNAL	ALTERNATOR FR SIGNAL	A/T SHIFT POSITION SIGNAL	P/S OIL PRESSURE SIGNAL	AIR CONDITIONING SIGNAL	FAST IDLE VALVE	M/T NEUTRAL SWITCH SIGNAL	CLUTCH SWITCH SIGNAL	HOSES AND CONNECTIONS
SYMPTOM		75	62	65	66	68	70	Section 22	74	71	72	*
DIFFICULT TO START ENGINE WHEN COLD			②						①			
WHEN COLD	Fast idle speed is not as specified (1,100–1,900 min^{-1} (rpm))		②						①			
WHEN WARM RPM TOO HIGH	Idle speed is above specified rpm.	②	②			③	③	③	②	③	③	①
WHEN WARM RPM TOO LOW	Idle speed is below specified rpm.	②	①							③	③	②
	Idle speed does not increase after initial start up.		①									
	Idle speed drops when blipping throttle with electrical load.		②		①							
	On models with automatic transmission, the idle speed drops in gear.		②			①						
	Idle speed drops when steering wheel is turning.		②				①					
	Idle speed drops when air conditioner is ON.		②					①				
FREQUENT STALLING WHILE WARMING UP			②						①			

* – If by-pass passages are blocked, a low idle speed will result.
– If hoses or by-pass passages are leaking, a high idle speed will result.

Troubleshooting Flow Chart — EACV

Self diagnosis Red LED indicator blinks fourteen times: A problem in the Electronic Air Control Valve (EACV) circuit.

–Engine is running.
–Check engine warning light is on.
–Red LED indicates CODE 14.

Turn the ignition switch OFF.

Remove ALTERNATOR SENSE fuse in the under-hood relay box for 10 seconds to reset ECU.

Start engine.

Is Check engine warning light on?
- NO → Intermittent failure (test driving may be necessary.)
- YES ↓

Stop engine.

Disconnect the 2P connector on the EACV.

Measure resistance between the 2 terminals on the EACV.

Is there 8—15Ω?
- NO → Replace EACV.
- YES ↓

Check for continuity to body ground on each terminal on the EACV.

Does continuity exist?
- YES → Replace EACV.
- NO ↓

Turn the ignition switch ON.

(To page 6-63)

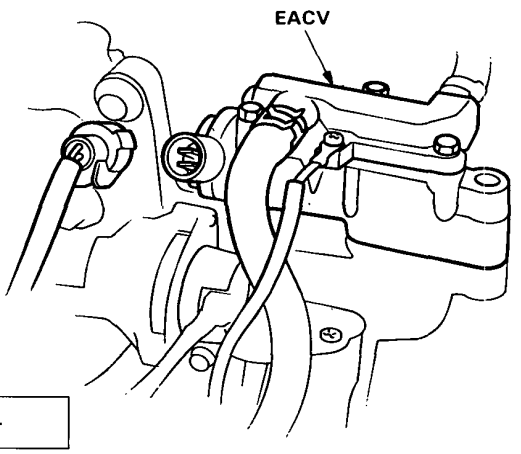

(From page 6-62)

Measure voltage between YEL/BLK (+) terminal and BLU/RED (–) terminal.

Is there battery voltage?

YES → Disconnect the 17P connector from the ECU.

Is there battery voltage?

YES → Repair short in BLU/RED wire between ECU (A11) and EACV.

NO → Substitute a known-good ECU and recheck. If symptom/indication goes away, replace the original ECU.

NO → Measure voltage between YEL/BLK (+) terminal and body ground.

Is there battery voltage?

NO → Repair open in YEL/BLK wire between the EACV and main relay.

YES → Turn the ignition switch OFF.

Reconnect the 2P connector to EACV.

Connect the PGM-FI test harness "A" connector to the R. side wire harness only, not the ECU (page 6-23).

Turn the ignition switch ON.

Measure voltage between A11 (+) terminal and A18 (–) terminal.

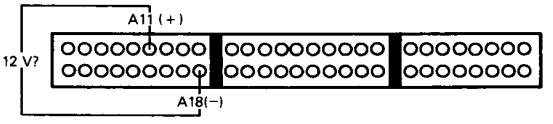

Is there battery voltage?

NO → Repair open in BLU/RED wire between ECU (A11) and EACV.

YES → Connect and disconnect A11 terminal to A18 terminal.

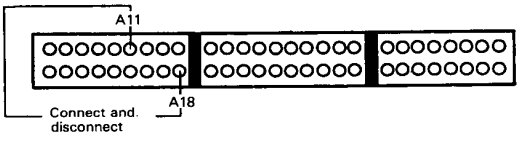

(To page 6-64)

(cont'd)

Troubleshooting Flow Chart — EACV (cont'd)

(From page 6-63)

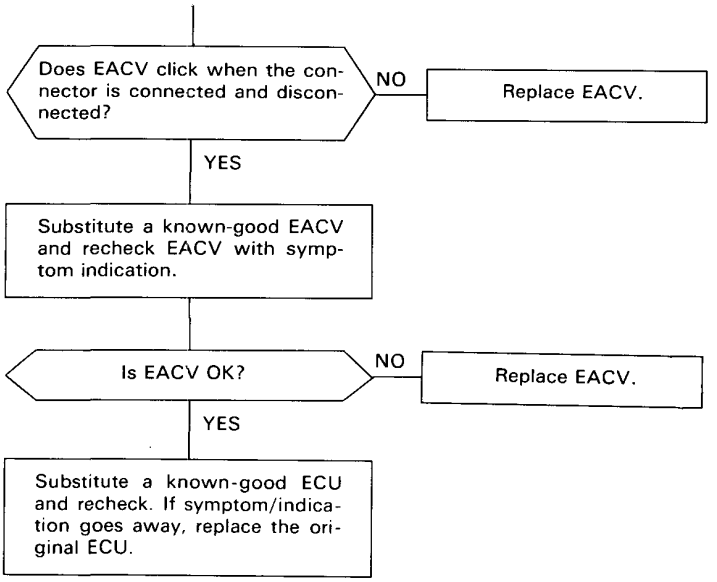

Troubleshooting Flow Chart —— Starter Signal

This signals the PGM-FI ECU when the engine is cranking. The ECU controls the current to the EACV to promote easy starting.

Inspection of Starter Switch Signal.

Connect the PGM-FI test harness between the ECU and connector (page 6-23).

Measure voltage B13 (+) terminal and A18 (–) terminal with ignition switch in the start position.

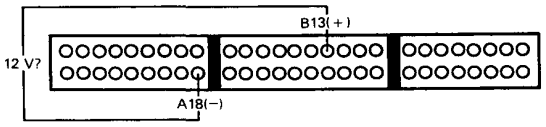

Is there battery voltage?

- NO → Inspect No. 2 fuse.
- YES → Starter signal is OK.

Inspect No. 2 fuse.

Is No. 2 fuse OK?

- NO → Replace fuse.
- YES → Repair open in BLK/WHT wire between ECU (B13) and No. 2 fuse.

Troubleshooting Flow Chart — Alternator FR Signal

This signals the PGM-FI ECU when the alternator is charging.

Inspection of Alternator FR signal.

Connect the PGM-FI test harness between the ECU and connector (page 6-23). Disconnect "B" connector from the R. side wire harness only, not the ECU.

Turn the ignition switch ON.

Measure voltage between B14 (+) terminal and A18 (–) terminal.

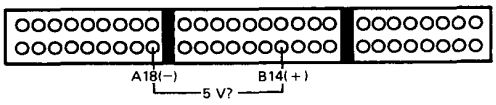

Is there approx. 5V?

NO → Substitute a known-good ECU and recheck. If prescribed voltage is now available, replace the original ECU.

YES

Turn the ignition switch OFF.

Reconnect "B" connector to the R. side wire harness.

Warm up engine to normal operating temperature (cooling fan comes on).

Measure voltage between B14 (+) terminal and A18 (–) terminal.

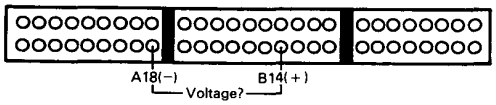

Does the voltage decrease when headlight and rear defogger are turned on?

NO → Stop engine.

YES

Alternator FR signal is OK.

(To page 6-67)

(From page 6-66)

Disconnect "B" connector from ECU only, not the R. side wire harness.

Disconnect the negative battery cable from the battery.

Check for continuity between B14 terminal and body ground.

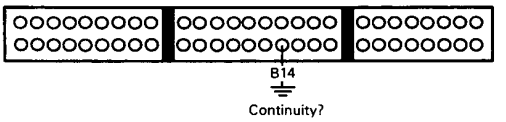

Does continuity exist?

YES → Disconnect GRN connector from the alternator.

NO → Disconnect GRN connector from the alternator.

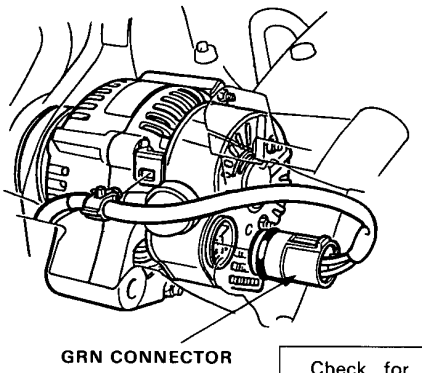

Check for continuity between B14 terminal and body ground.

Does continuity exist?

NO → See Alternator Inspection.

YES → Repair short in WHT/RED wire between ECU (B14) and alternator.

Connect WHT/RED wire to body ground.

Check for continuity between B14 terminal and body ground.

Does continuity exist?

YES → See Alternator Inspection.

NO → Repair open in WHT/RED wire between ECU (B14) and alternator.

Troubleshooting Flow Chart —— A/T Shift Position Signal

This signals the PGM-FI ECU when the transmission is in Neutral or Park.

Inspection of A/T Shift Position Signal

Turn the ignition switch ON.

Observe the A/T shift indicator and select each position separately.

Does the indicator light properly?

NO → See A/T shift position Indicator Inspection.

YES

Turn the ignition switch OFF.

Connect the PGM-FI test harness between the ECU and connector (page 6-23). Disconnect "B" connector from the R. side wire harness only, not the ECU.

Turn the ignition switch ON.

Measure voltage between B7 (+) terminal and A18 (–) terminal.

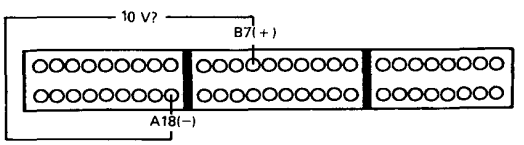

Is there approx. 10 V?

NO → Substitute a known-good ECU and recheck If prescribed voltage is now available, replace the original ECU.

YES

Reconnect "B" connector to the R. side wire harness.

Measure voltage between B7 (+) terminal and A18 (–) terminal in Neutral position.

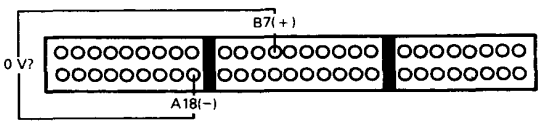

(To page 6-69)

(From page 6-68)

Is there voltage?

YES

- Repair open in LT GRN wire between ECU (B7) and combination meter.
- Repair open in the GRN wire between the combination meter and A/T shift position switch.

NO

Measure voltage between B7 (+) terminal and A18 (–) terminal in Park position.

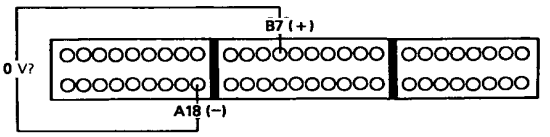

Is there voltage?

YES

Repair open in GRN/WHT wire between combination meter and A/T shift position switch.

NO

A/T shift position signal is OK.

Troubleshooting Flow Chart — P/S Oil Pressure Signal

This signals the PGM-FI ECU when the power steering load is high.

Inspection of P/S Oil Pressure Signal

Connect the PGM-FI test harness between the ECU and connector (page 6-23).

Turn the ignition switch ON.

Measure voltage between B12 (+) terminal and A18 (–) terminal.

Is there battery voltage?

YES → Disconnect the 2P connector on the P/S oil pressure switch.

Connect RED terminal to BLK terminal.

Is there approx. 10 V?

NO → Replace P/S oil pressure switch.

YES → Repair open in RED wire between ECU (B12) and P/S oil pressure switch or BLK wire between P/S oil pressure switch and G3.

NO → Start engine.

Turn steering wheel slowly.

Measure voltage between B12 (+) terminal and A18 (–) terminal while steering wheel is turning.

Is there approx. 10 V?

NO → Disconnect "B" connector from R. side wire harness only, not the ECU.

Is there approx. 10 V?

NO → Substitute a known-good ECU and recheck. If prescribed voltage is now available, replace the original ECU.

YES → Reconnect "B" connector to R. side wire harness and disconnect 2P connector on the P/S oil pressure switch.

Is there approx. 10 V?

YES → Replace P/S oil pressure switch.

NO → Repair short in RED wire between ECU (B12) and the P/S oil pressure switch.

YES → P/S oil pressure signal is OK.

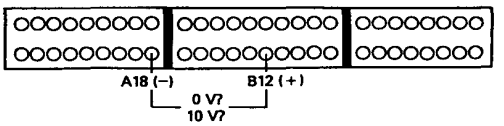

This signals the PGM-FI ECU when the transmission is in Neutral.

Inspection of M/T Neutral Switch Signal

Connect the PGM-FI test harness between the ECU and connector (page 6-23).

Turn the ignition switch ON.

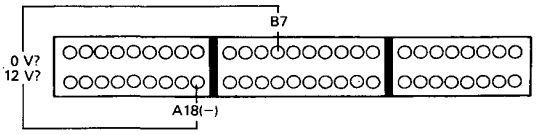

Measure voltage between B7 (+) terminal and A18 (–) terminal in Neutral position.

Is there voltage?

YES → Disconnect the 2P connector on the M/T neutral switch.

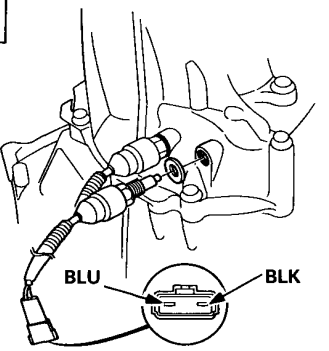

Connect BLU terminal to BLK terminal.

Is there voltage?

NO → Replace M/T neutral switch.

YES → Repair open in BLU wire between ECU (B7) and M/T neutral switch or BLK wire between M/T neutral switch and G102.

NO → Shift transmission in gear.

Is there battery voltage?

NO → Disconnect "B" connector from R. side wire harness only, not the ECU.

Is there battery voltage?

NO → Substitute a known-good ECU and recheck. If prescribed voltage is now available, replace the original ECU.

YES → Reconnect "B" connector to R. side wire harness and disconnect 2P connector on the M/T neutral switch.

Is there battery voltage?

NO → Repair short in BLU wire between ECU (B7) and the M/T neutral switch.

YES → Replace M/T neutral switch.

YES → M/T neutral switch signal is OK.

Troubleshooting Flow Chart — Clutch Switch Signal

This signals the PGM-FI ECU when the clutch is engaged.

Inspection of clutch switch signal

Connect the PGM-FI test harness between the ECU and connector (page 6-23).

Turn the ignition switch ON.

Measure voltage between B9 (+) terminal and A18 (–) terminal.

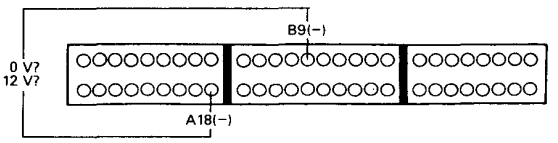

Is voltage below 3 V?

NO → Turn the ignition switch OFF.

Disconnect the 2P connector on the clutch switch.

Check for continuity between the 2 terminals on the clutch switch.

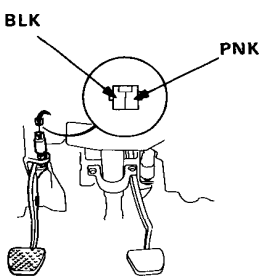

Does continuity exist?

NO → Replace the clutch switch.

YES → Turn the ignition switch ON.

Measure voltage between PNK (+) terminal and body ground.

Is there battery voltage?

NO → Repair open in PNK wire between ECU (B9) and the clutch switch.

YES → Repair open in BLK wire between the clutch switch and G401 (LH drive)/G403 (RH drive).

YES → Depress the clutch pedal.

Measure voltage between B9 (+) terminal and A18 (–) termianl.

(To page 6-73)

(From page 6-72)

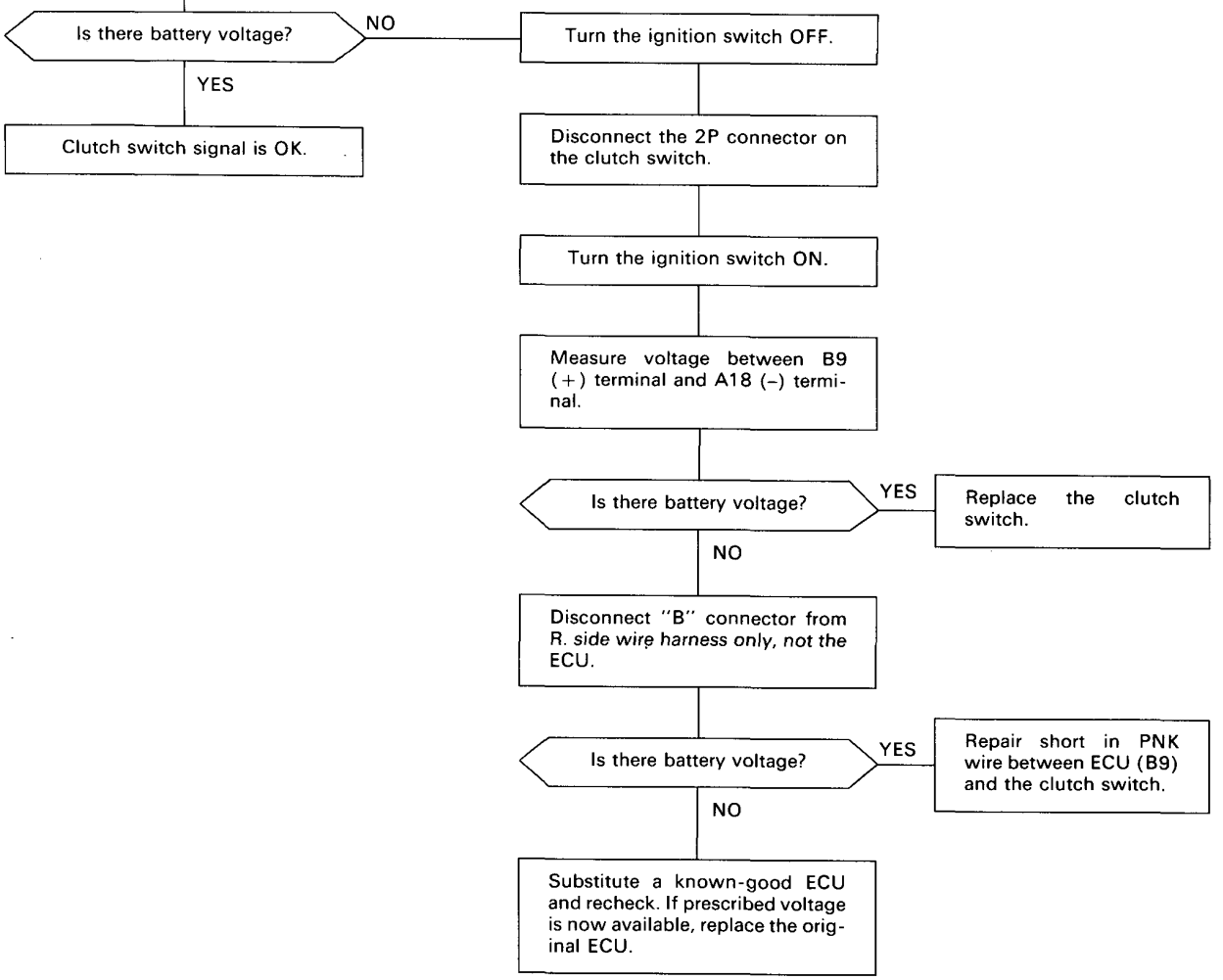

Fast Idle Control

Inspection

NOTE: The fast idle valve is factory adjusted; it should not be disassembled.

1. Start the engine.

2. Remove the cover of the fast idle valve.

3. Put your finger on the valve seat area and make sure that there is air flow with the engine cold (coolant temperature below 30°C, 86°F) and idling.

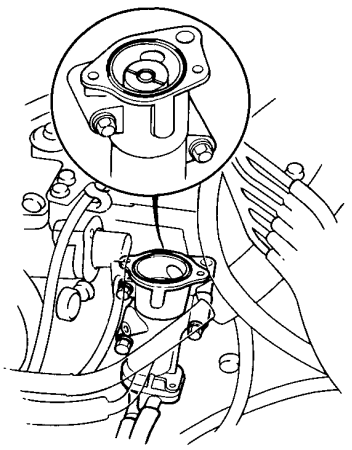

- If not, replace the fast idle valve and retest.

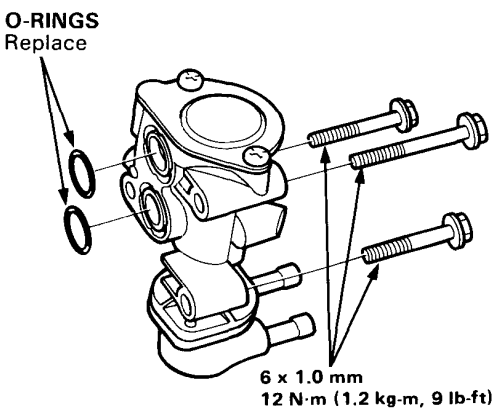

4. Warm up the engine (cooling fan comes on).

5. Check that the valve is completely closed. If not, an air suction sound can be heard in the valve seat area.
   - If any suction is heard, the valve is leaking. Replace the fast idle valve and recheck.

Idle Speed

Inspection/Adjustment

1. Start the engine and warm it up to normal operating temperature (the cooling fan comes on).

2. Connect a tachometer.

3. Set the steering in the straight forward condition, and check idling in no-load conditions in which the headlights, blower fan, rear defroster, cooling fan, and air conditioner are not operating.

Idle speed should be:

KG, KX

Manual	680 ± 50 rpm
Automatic	680 ± 50 rpm (in N or P)

KB, KE, KF, KQ

Manual	720 ± 50 rpm
Automatic	680 ± 50 rpm (in D) and 720 ± 50 rpm (in N or P)

4. Check the Yellow LED display at the ECU under the passenger's seat.

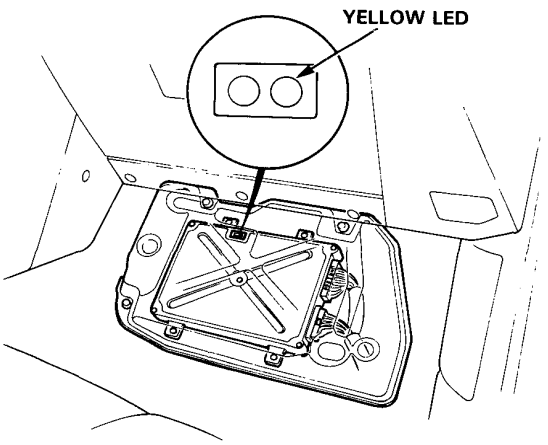

- If Yellow LED is off
  Do not adjust idle adjusting screw.
- If Yellow LED is blinking
  Adjust idle adjusting screw 1/4 turn clockwise.
- If Yellow LED is on
  Adjust idle adjusting screw 1/4 turn counter-clockwise.

NOTE: On a new engine (less than 310 miles or 500 km) the Yellow LED may light even though the idle adjusting screw is properly set. However, no adjustment should be made.

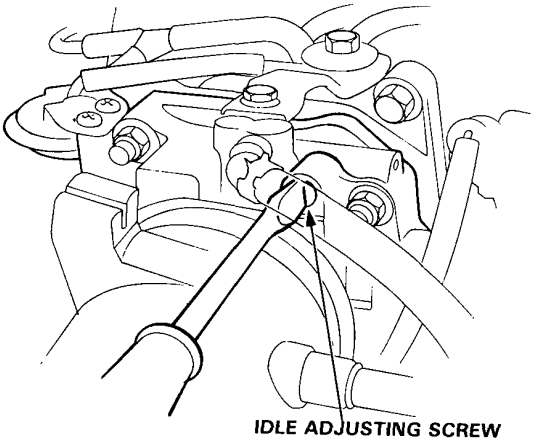

— Check that the Yellow LED goes off after approximately 30 seconds.
If it does not go off, rotate the idle adjusting screw by 1/4 turn in the same direction, and repeat the same operation until the Yellow LED goes off.

5. Check the idle speed in the following conditions.
   - With headlights (Hi) and rear window defogger ON.
   - While the steering wheel is turning.
   - With air conditioner compressor on.
   - If, applicable, with Automatic transmission model when shifted in gear (except N or P).

   Idle should remain stable at: 800 ± 50 rpm

Fuel Supply System

Symptom-to-Sub System Chart

NOTE: Across each row in the chart, the sub systems that could be sources of a symptom are ranked in the order they should be inspected, starting with ①. Find the symptom in the left column, read across to the most likely source, then refer to the page listed at the top of that column. If inspection shows the system is OK, try the next system ②, etc.

PAGE / SUB SYSTEM		FUEL INJECTOR	INJECTOR RESISTOR	PRESSURE REGULATOR	FUEL FILTER	FUEL PUMP	MAIN RELAY	FUEL TANK	CONTAMI-NATED FUEL
SYMPTOM		78	80	80	83	84	86	87	*
ENGINE WON'T START		②	③		③	①	②		
FREQUENT STALLING					②	①			②
POOR PERFORM-ANS	MISFIRE	①	②						③
	LOSS OF POWER				①				②

* Fuel with dirt, water or a high percentage of alcohol is considered contaminated.

Fuel Pressure

Inspection

1. Relieve fuel pressure.

2. Remove the service bolt on the top of the fuel filter while holding the banjo bolt with another wrench and attach the fuel pressure gauge.

3. Start the engine. Measure the fuel pressure with the engine idling and the #1 vacuum hose of the pressure regulator disconnected.

   Pressure should be:
   250–279 kPa (2.55–2.85 kg/cm², 36-41 psi)

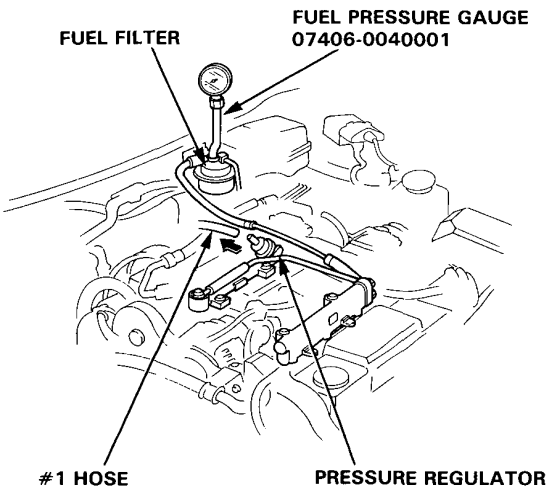

- If the fuel pressure is not as specified, first check the fuel pump (page 6-84). If the pump is OK, check the following.

– If the pressure is higher than specified, inspect for:
  - Pinched or clogged fuel return hose or piping.
  - Faulty pressure regulator (page 6-80).

– If the pressure is lower than specified, inspect for:
  - Clogged fuel filter
  - Pressure regulator failure (page 6-80).
  - Leakage in the fuel line

Fuel Pressure

Relieving

WARNING
- **Do not smoke while working on the fuel system. Keep open flames or sparks away from the work area.**
- **Be sure to relieve fuel pressure while the engine is off.**

NOTE: Before disconnecting fuel pipes or hoses, release pressure from the system by loosening the 6 mm service bolt at top of the fuel filter.

1. Disconnect the battery negative cable from the battery negative terminal.

2. Use a box end wrench on the 6 mm service bolt at top of the fuel filter, while holding the special banjo bolt with another wrench.

3. Place a rag or shop towel over the 6 mm service bolt.

4. Slowly loosen the 6 mm service bolt one complete turn.

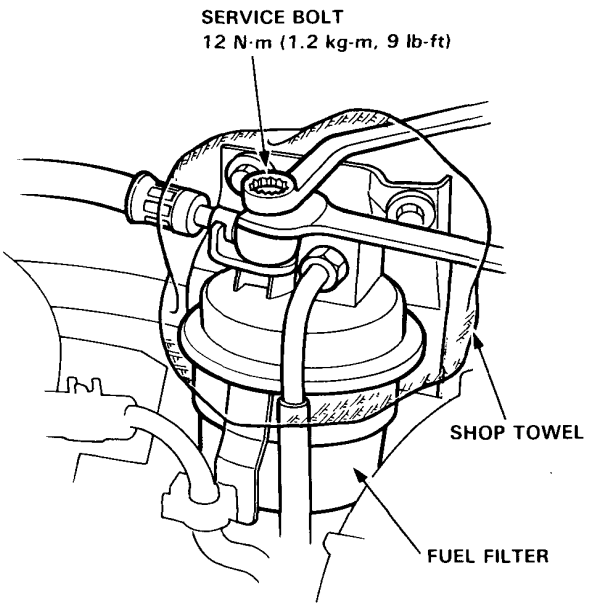

NOTE:
- A fuel pressure gauge can be attached at the 6 mm service bolt hole.
- Always replace the washer between the service bolt and the special banjo bolt, whenever the service bolt is loosened to relieve fuel pressure.
- Replace all washers whenever the bolts are removed to disassemble parts.

Test

NOTE: Check the following items before testing: idle speed, ignition timing and idle CO %.

If the engine will run:

1. With the engine idling, disconnect each injector connector individually and inspect the change in the idling speed.

   - If the idle speed drop is almost the same for each cylinder, the injectors are normal.

   - If the idle speed or quality remains the same when you disconnect a particular injector, replace the injector and retest.

2. Check the clicking sound of each injector by means of a stethoscope when the engine is idling.

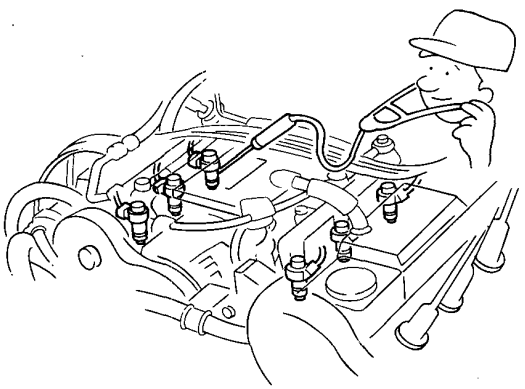

   - If any injector fails to make the typical clicking sound, check the sound again after replacing the injector.

   – If clicking sound is still absent, check the following:
     - Whether there is any short-circuiting, wire breakage or poor connection in the YEL/BLK wire between the main relay and the resistor.
     - Whether the resistor is open or corroded (page 6-80).
     - Whether there is any short-circuiting, wire breakage or poor connection in the RED/BLK wire between the resistor and the injector.
     - Whether there is any short-circuiting, wire breakage or poor connection in the wire between the injector and the ECU.

     If all is OK, check the ECU (page 6-25).

If the engine cannot be started:

1. Remove the connector of the injector, and measure the resistance between the 2 terminals of the injector.

   Resistance should be: 1.5–2.5 Ω

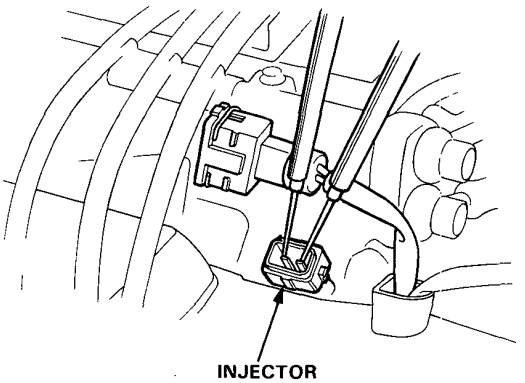

   - If the resistance is not as specified, replace the injector.

   - If the resistance is as specified, check the fuel Pressure (page 6-77).

   – If the fuel pressure is as specified, check the following:
     - Whether there is any short-circuiting, wire breakage or poor connection in the YEL/BLK wire between the main relay and the resistor.
     - Whether the resistor is open or corroded (page 6-79).
     - Whether there is any short-circuiting, wire breakage, or poor connection in the RED/BLK wire between the resistor and the injector.
     - Whether there is any short-circuiting, wire breakage or poor connection in the wire between the injector and the ECU.

     If all is OK, check the ECU (page 6-25).

Replacement

WARNING **Do not smoke during the work. Keep open flames away from your work area.**

1. Disconnect the battery negative cable from the battery negative terminal.
2. **Relieve fuel pressure (page 6-77).**
3. *Disconnect the connectors of the injectors.*
4. Disconnect the vacuum hose and fuel return hose from the pressure regulator.

   NOTE: Place a rag or shop towel over the hoses before disconnecting them.
5. Disconnect the fuel hose from the fuel pipe.
6. Loosen the retainer nuts on the fuel pipe and harness holder.
7. Disconnect the fuel pipe.
8. Remove the injectors from the intake manifold.

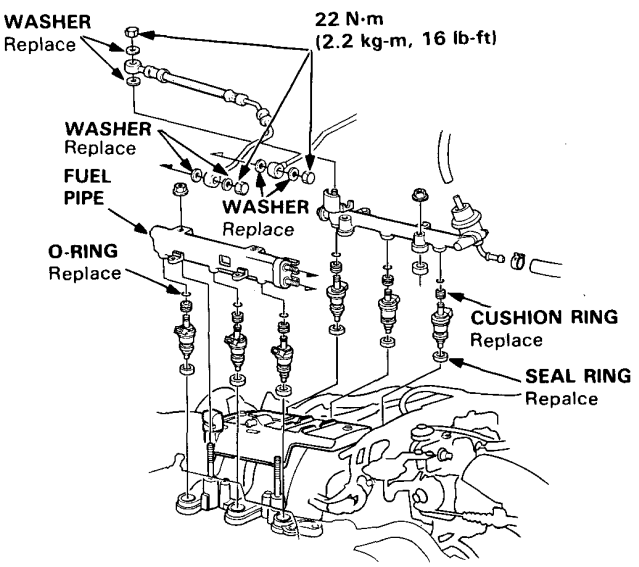

9. *Slide new cushion rings onto the injectors.*
10. Coat new O-rings with clean engine oil and put them on the injectors.
11. Insert the injectors into the fuel pipe first.
12. Coat new seal rings with clean engine oil and press them into the intake manifold.
13. Install the injectors and fuel pipe assembly in the manifold.

    CAUTION: To prevent damage to the O-ring, install the injectors in the fuel pipe first, then install them in the intake manifold.
14. *Align the center line on the connector with the mark* on the fuel pipe.

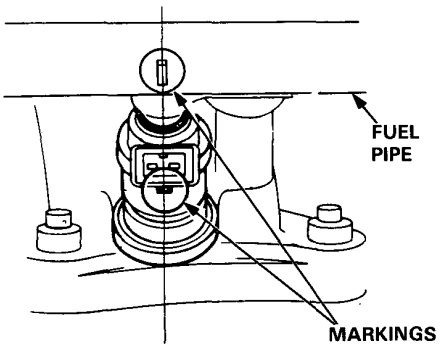

15. Install and tighten the retainer nuts.
16. Connect the vacuum hose and fuel return hose to the pressure regulator.
17. Install the connectors on the injectors.
18. Turn the ignition switch ON but do not operate the starter. After the fuel pump runs for approximately two seconds, the fuel pressure in the fuel line rises. Repeat this two or three times, then check whether there is any fuel leakage.

Pressure Regulator

Test

WARNING Do not smoke during the test. Keep open flames away from your work area.

1. Check the vacuum line for proper connection, cracks, blockage or disconnected hose.

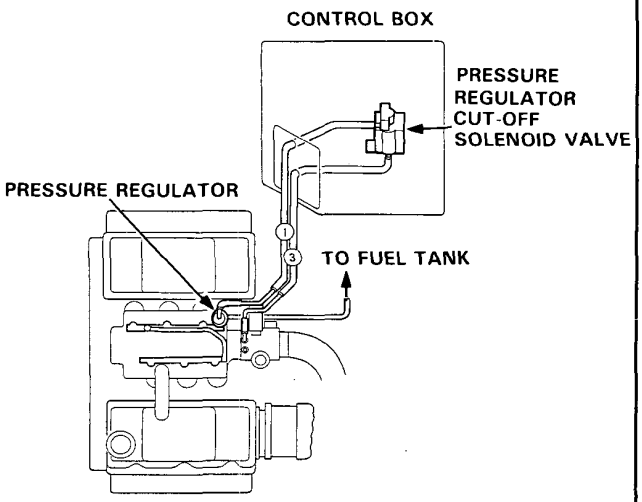

2. Disconnect #1 vacuum hose from the pressure regulator, and connect a vacuum gauge to the hose.
3. Start the engine and allow to idle.
4. Check for vacuum.

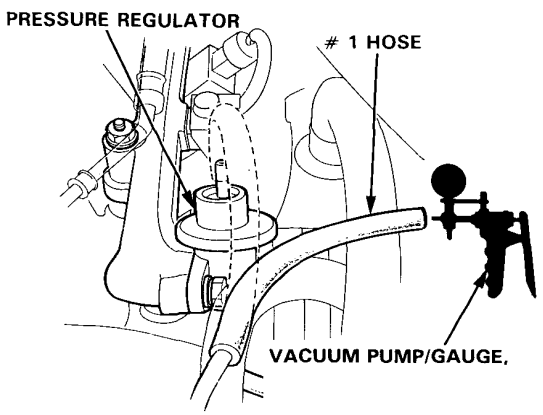

There should be vacuum.

- If there is no vacuum, go to pressure regulator cut-off solenoid valve test II (page 6-82).

Injector Resistor

Test

1. Disconnect the resistor connector.
2. Check for resistance between each of the resistor terminals (g, f, e, d, c and b) and the power terminal (a).

Resistance should be: 5–7 Ω

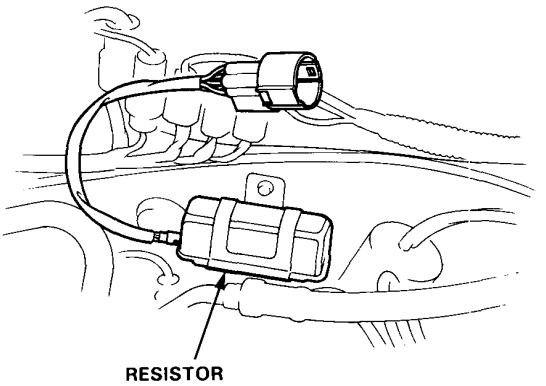

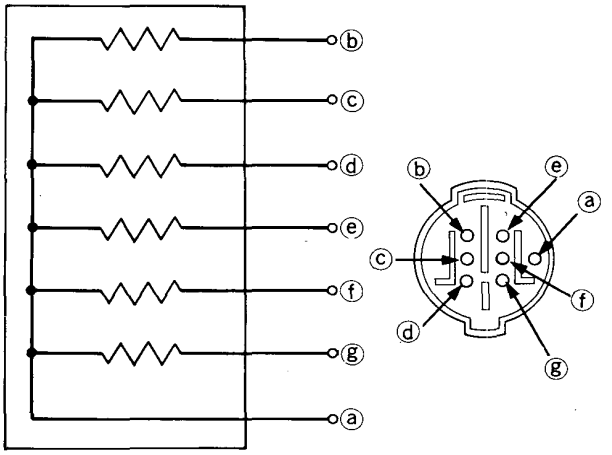

- Replace the resistor with a new one if any of the resistances are outside of the specification.

5. Stop the engine.

6. Restart the engine.

   NOTE:
   - Engine coolant temperature must be above 105°C (221°F).
   - Intake air temperature must be above 80°C (176°F).

7. Check for vacuum.

   There should be no vacuum.
   - If there is vacuum, go to pressure regulator cut-off solenoid valve test I (page 6-82).

8. Stop the engine.

9. Attach a pressure gauge to the service port of the fuel filter (page 6-77).

10. Restart the engine and check that the fuel pressure rises by disconnecting #1 vacuum hose from the regulator.

    Pressure should be:
    250–279 kPa (2.55–2.85 kg/cm², 36-41 psi)
    (with the hose disconnected)

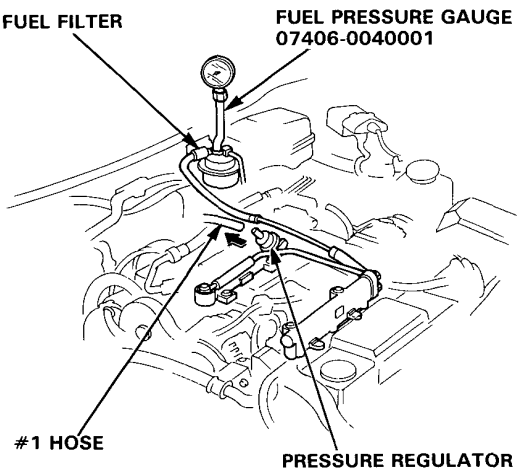

- If the fuel pressure does not rise, check whether it rises when the return hose is lightly pinched.

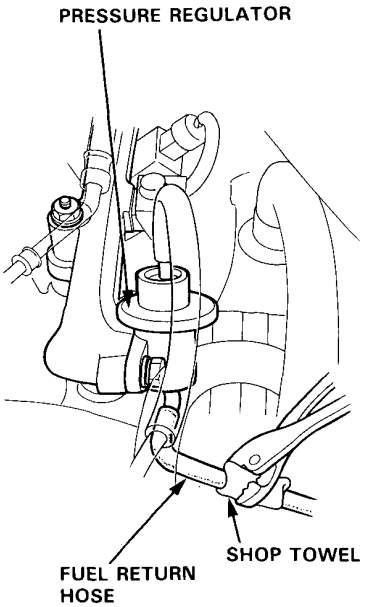

— If the pressure does not rise, replace the regulator and retest.

Pressure Regulator

Test

WARNING Do not smoke during the test. Keep open flames away from your work area.

1. Check the vacuum line for proper connection, cracks, blockage or disconnected hose.

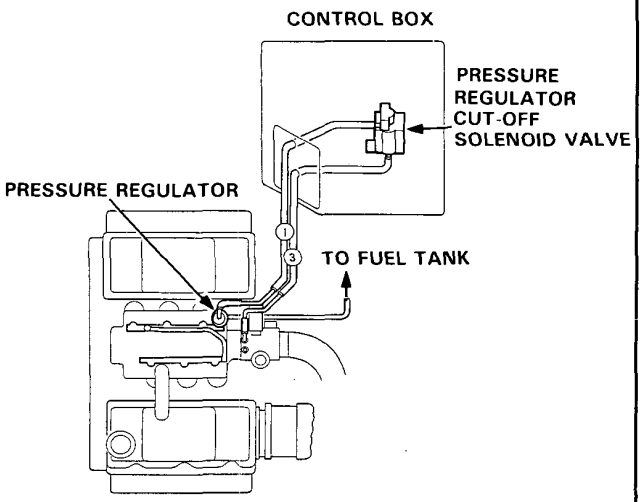

2. Disconnect #1 vacuum hose from the pressure regulator, and connect a vacuum gauge to the hose.
3. Start the engine and allow to idle.
4. Check for vacuum.

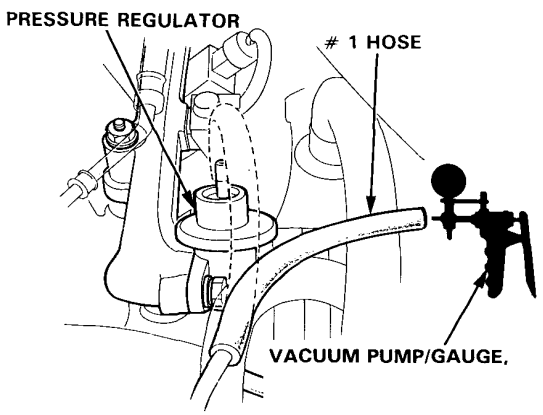

There should be vacuum.

- If there is no vacuum, go to pressure regulator cut-off solenoid valve test II (page 6-82).

Injector Resistor

Test

1. Disconnect the resistor connector.
2. Check for resistance between each of the resistor terminals (g, f, e, d, c and b) and the power terminal (a).

Resistance should be: 5–7 Ω

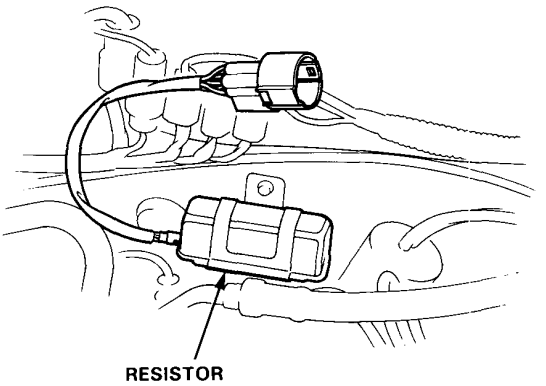

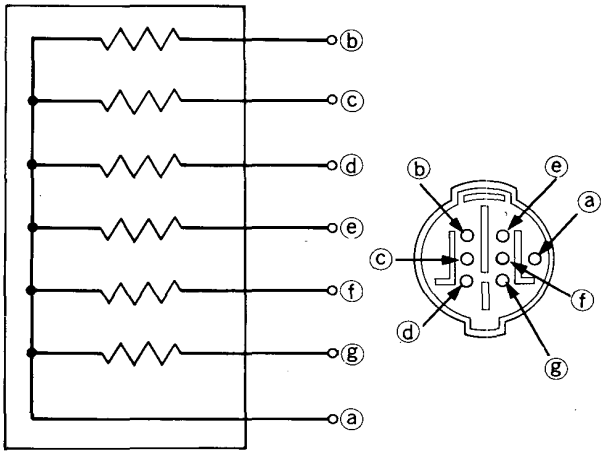

- Replace the resistor with a new one if any of the resistances are outside of the specification.

5. Stop the engine.

6. Restart the engine.

   NOTE:
   - Engine coolant temperature must be above 105°C (221°F).
   - Intake air temperature must be above 80°C (176°F).

7. Check for vacuum.

   There should be no vacuum.
   - If there is vacuum, go to pressure regulator cut-off solenoid valve test I (page 6-82).

8. Stop the engine.

9. Attach a pressure gauge to the service port of the fuel filter (page 6-77).

10. Restart the engine and check that the fuel pressure rises by disconnecting #1 vacuum hose from the regulator.

    Pressure should be:
    250–279 kPa (2.55–2.85 kg/cm², 36-41 psi)
    (with the hose disconnected)

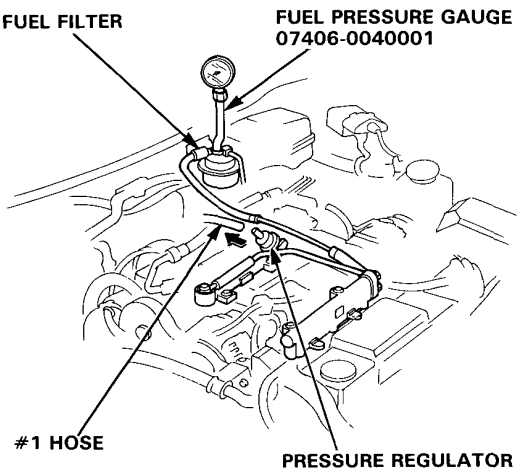

- If the fuel pressure does not rise, check whether it rises when the return hose is lightly pinched.

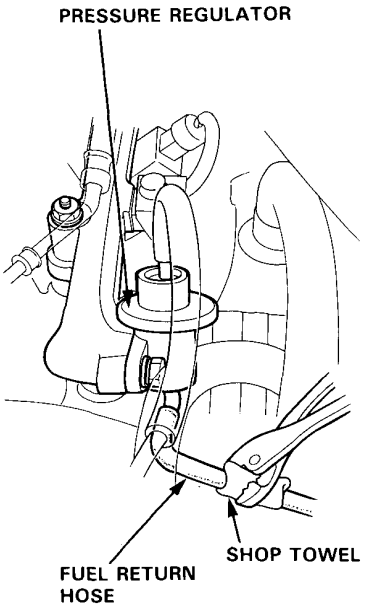

— If the pressure does not rise, replace the regulator and retest.

Solenoid Valve Test

Test I:

NOTE:

- Engine coolant temperature must be above 105°C (221 °F).
- Intake air temperature must be above 80 °C (176 °F).

1. Disconnect 6P connector, then attach the positive probe of the voltmeter to BLK/YEL terminal and the negative probe to LT GRN terminal.

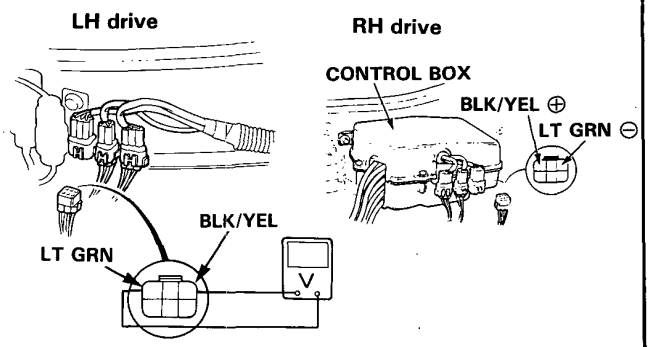

- If there is voltage, replace the solenoid valve and retest.
- If there is no voltage attach the positive probe of the voltmeter to BLK/YEL terminal and the negative probe to body ground within one minute after restart.
  - If there is no voltage, repair open circuit in BLK/YEL wire between the solenoid valve and NO. 11 (7.5A) fuse.
  - If there is voltage, check for an open circuit in LT GRN wire between the solenoid valve and the ECU. If wire is OK, substitute a known-good ECU and retest. If symptom goes away, replace the original ECU.

Test II:

1. Start the engine.
2. Disconnect the #3 vacuum hose from the intake manifold and check the vacuum.

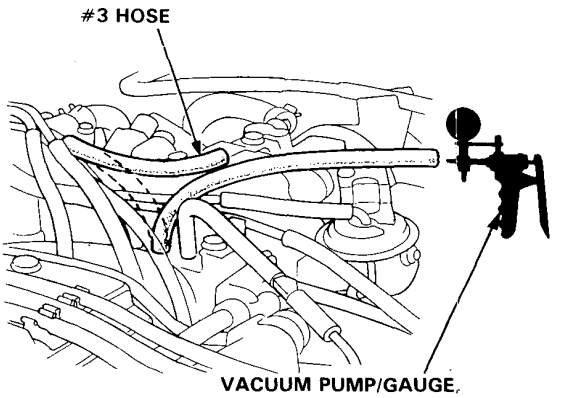

- If there is no vacuum, check the vacuum port.
- If there is vacuum, check the vacuum line for proper connection, cracks, blockage or disconnected hose. If the vacuum line is OK, reconnect the #3 vacuum hose.

3. Disconnect the 6p connector.
4. Attach the positive probe of the voltmeter to BLK/YEL terminal and the negative probe to LT GRN terminal.

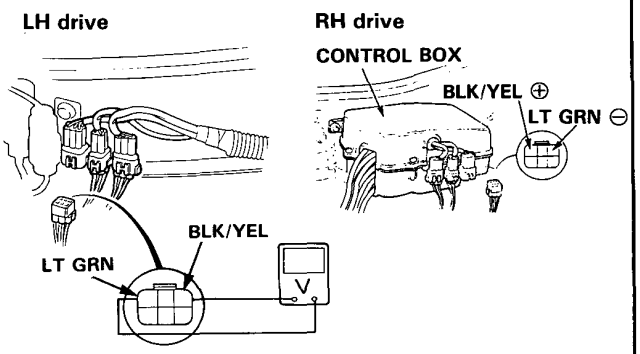

- If there is voltage, check for a short in LT GRN wire between the solenoid valve and ECU. If wire is OK, substitute a known-good ECU and retest. If symptom goes away, replace the original ECU.
- If there is no voltage, replace the solenoid valve and retest.

Fuel Filter

Replacement

WARNING **Do not smoke while working on fuel system. Keep open flame away from work area.**

1. Disconnect the negative terminal of the battery.
2. Place a shop towel under the pressure regulator, then **relieve fuel pressure (page 6-77).**
3. Disconnect the #1 vacuum hose and fuel return hose.
4. Remove the two 6 mm retainer bolts.

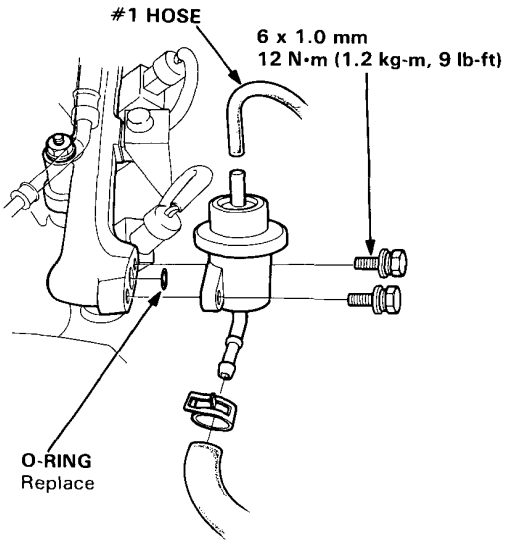

NOTE:
- Replace the O-ring.
- When assembling the regulator, apply clean engine oil to the O-ring and assemble it into its proper position, taking care not to damage the O-ring.

Replacement

WARNING **Do not smoke while working on fuel system. Keep open flame away from work area.**

The filter should be replaced: every 4 years or 60,000 miles (96,000 km), whichever comes first or whenever the fuel pressure drops below the specified value (250–279 kpa, 2.55–2.85 kg/cm², 36–41 psi with the vacuum pressure hose disconnected) after making sure that the fuel pump and the pressure regulator are OK.

1. Disconnect the battery cable from the negative terminal.
2. Place a shop towel under and around the fuel filter.
3. **Relieve fuel pressure (page 6-77).**
4. Remove the 12 mm banjo bolt and the fuel feed pipe from the filter.
5. Remove the fuel filter clamp and fuel filter.
6. When assembling, use new washers, as shown.

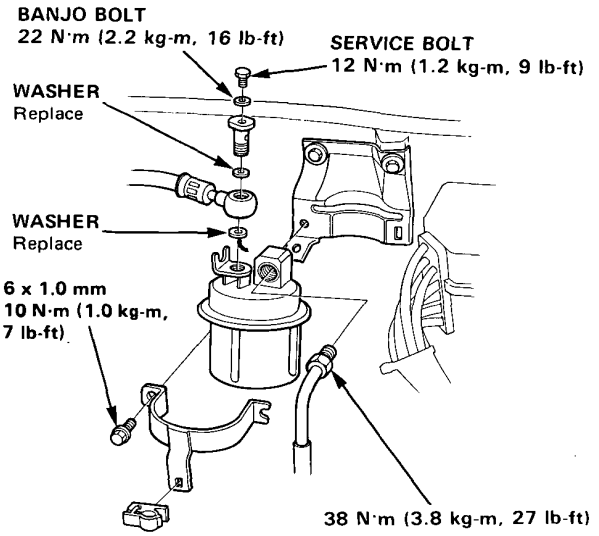

CAUTION: Clean the flared joint of high pressure hoses throughly before reconnecting them.

Fuel Filter

Replacement

WARNING **Do not smoke while working on fuel system. Keep open flame away from work area.**

1. Disconnect the negative terminal of the battery.
2. Place a shop towel under the pressure regulator, then **relieve fuel pressure (page 6-77).**
3. Disconnect the #1 vacuum hose and fuel return hose.
4. Remove the two 6 mm retainer bolts.

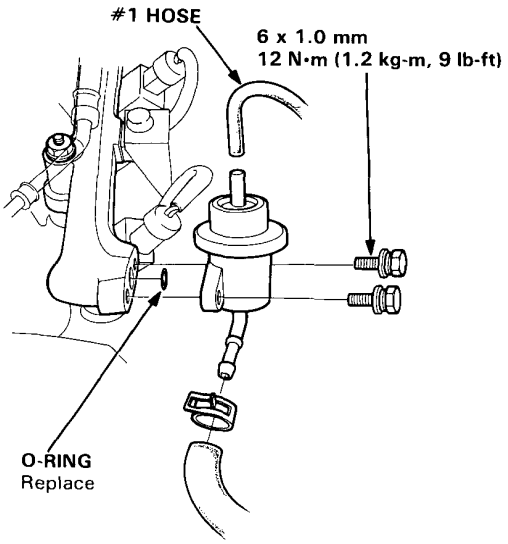

NOTE:
- Replace the O-ring.
- When assembling the regulator, apply clean engine oil to the O-ring and assemble it into its proper position, taking care not to damage the O-ring.

Replacement

WARNING **Do not smoke while working on fuel system. Keep open flame away from work area.**

The filter should be replaced: every 4 years or 60,000 miles (96,000 km), whichever comes first or whenever the fuel pressure drops below the specified value (250–279 kpa, 2.55–2.85 kg/cm², 36–41 psi with the vacuum pressure hose disconnected) after making sure that the fuel pump and the pressure regulator are OK.

1. Disconnect the battery cable from the negative terminal.
2. Place a shop towel under and around the fuel filter.
3. **Relieve fuel pressure (page 6-77).**
4. Remove the 12 mm banjo bolt and the fuel feed pipe from the filter.
5. Remove the fuel filter clamp and fuel filter.
6. When assembling, use new washers, as shown.

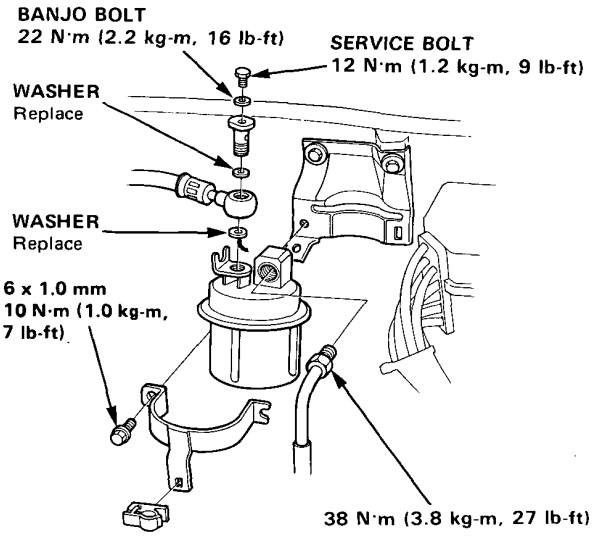

CAUTION: Clean the flared joint of high pressure hoses throughly before reconnecting them.

Test

WARNING Do not smoke during the test. Keep open flame away from your work area.

1. With the ignition switch OFF, disconnect the connector from the main relay behind the fuse box.

2. Connect the two BLK/YEL wires with a jumper wire.

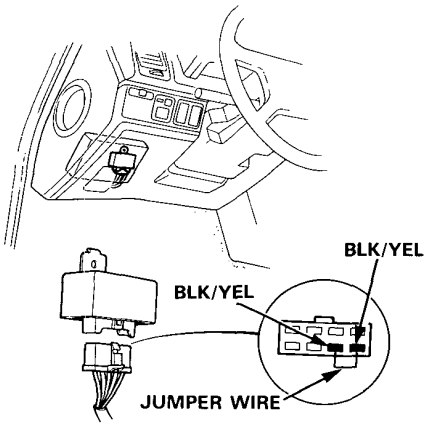

3. Relieve fuel pressure as described on page 6-77 then tighten the service bolt.

4. Disconnect the fuel return hose from the regulator.

5. Turn the ignition switch ON for 10 seconds and measure the amount of fuel flow.

   Amount should be:
   230 cc (7.8 oz) min. in 10 seconds at 12V

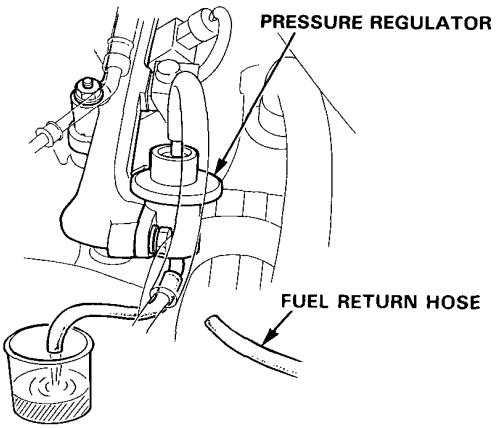

- If fuel flow is less than 230 cc (7.8 oz), or there is no fuel flow, check for:
  - Clogged fuel filter.
  - Clogged fuel line.
  - Pressure regulator failure (page 6-80).

If you suspect a problem with the fuel pump, check that the fuel pump actually runs; when it is ON, you will hear some noise if you hold your ear to the fuel filler port with the fuel filler cap removed. If the pump does not make noise, check as follows:

1. Remove the maintenance access cover in the luggage area.

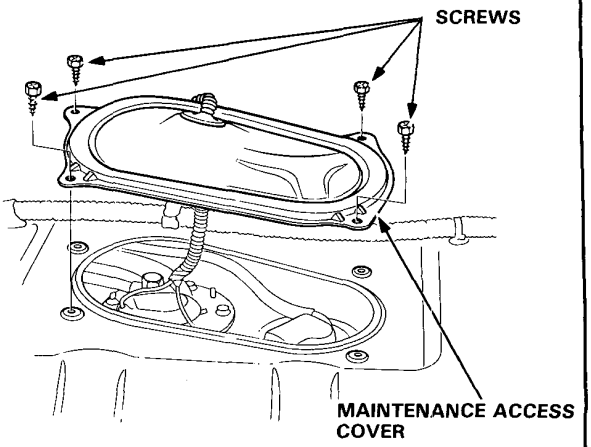

2. Disconnect the connector.

   CAUTION: Be sure to turn the ignition switch OFF before disconnecting the wires.

3. Check that battery voltage is available at the fuel pump connector when the ignition switch is turned ON (Positive probe to the BLK/YEL wire, negative probe to the BLK wire).

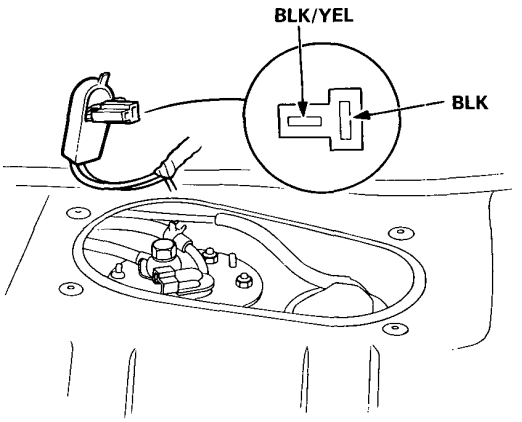

- If battery voltage is available, replace the fuel pump.

- If there is no voltage, check the main relay and wire harness (page 6-86).

Fuel Pump

Replacement

WARNING **Do not smoke while working on fuel system. Keep open flames away from your work area.**

1. Relieve fuel pressure (page 6-64).
2. Remove the maintenance access cover in the luggage area.

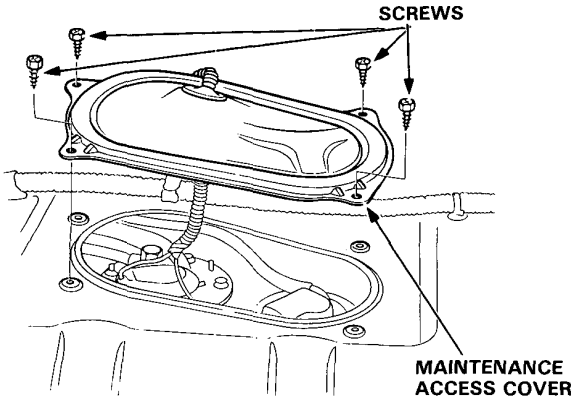

3. Disconnect the fuel lines and connector.
4. Remove the fuel pump mounting nuts.
5. Remove the fuel pump from the fuel tank.

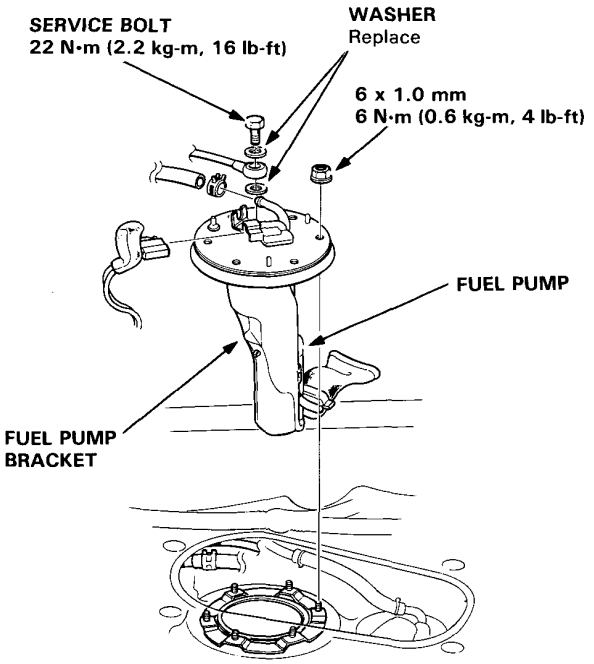

Main Relay

Test

1. Remove the main relay, near the under-dash fuse box.
2. Attach the battery positive terminal to the No. 4 terminal and the battery negative terminal to the No. 8 terminal of the main relay. Then check for continuity between the No. 5 terminal and No. 7 terminal of the main relay.
   - If there is continuity, go on to step 3.
   - If there is no continuity, replace the relay and retest.

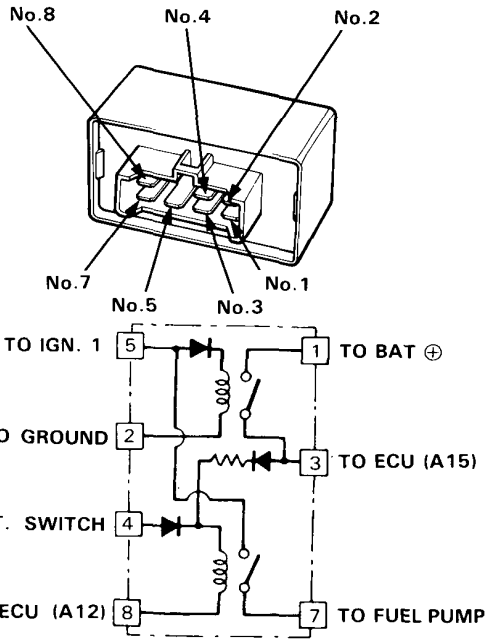

3. Attach the battery positive terminal to the No. 5 terminal and the battery negative terminal to the No. 2 terminal of the main relay. Then check that there is continuity between the No. 1 terminal and No. 3 terminal of the main relay.
   - If there is continuity, go on to step 4.
   - If there is no continuity, replace the relay and retest.
4. Attach the battery positive terminal to the No. 3 terminal and battery negative terminal to the No. 8 terminal of the main relay. Then check that there is continuity between the No. 5 terminal and No. 7 terminal of the main relay.
   - If there is continuity, the relay is OK;
     If the fuel pump still does not work, go to Harness Test in the next column.
   - If there is no continuity, replace the relay and retest.

Fuel Pump

Replacement

WARNING **Do not smoke while working on fuel system. Keep open flames away from your work area.**

1. Relieve fuel pressure (page 6-64).
2. Remove the maintenance access cover in the luggage area.

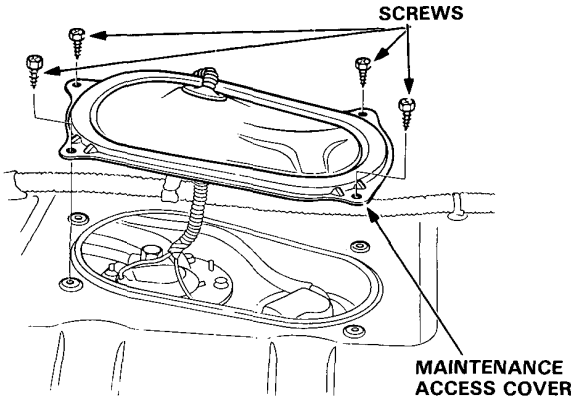

3. Disconnect the fuel lines and connector.
4. Remove the fuel pump mounting nuts.
5. Remove the fuel pump from the fuel tank.

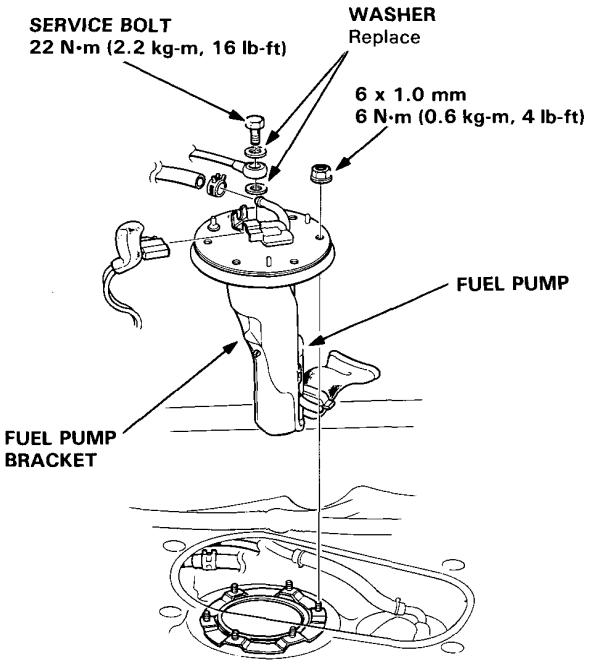

Main Relay

Test

1. Remove the main relay, near the under-dash fuse box.
2. Attach the battery positive terminal to the No. 4 terminal and the battery negative terminal to the No. 8 terminal of the main relay. Then check for continuity between the No. 5 terminal and No. 7 terminal of the main relay.
   - If there is continuity, go on to step 3.
   - If there is no continuity, replace the relay and retest.

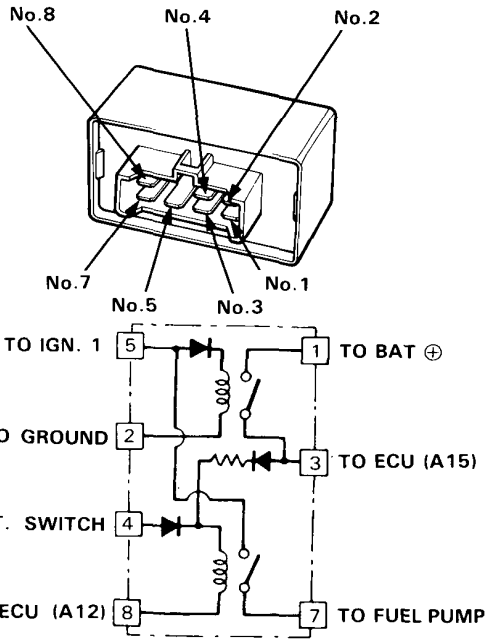

3. Attach the battery positive terminal to the No. 5 terminal and the battery negative terminal to the No. 2 terminal of the main relay. Then check that there is continuity between the No. 1 terminal and No. 3 terminal of the main relay.
   - If there is continuity, go on to step 4.
   - If there is no continuity, replace the relay and retest.
4. Attach the battery positive terminal to the No. 3 terminal and battery negative terminal to the No. 8 terminal of the main relay. Then check that there is continuity between the No. 5 terminal and No. 7 terminal of the main relay.
   - If there is continuity, the relay is OK;
     If the fuel pump still does not work, go to Harness Test in the next column.
   - If there is no continuity, replace the relay and retest.

Main Relay

Harness Test

1. Keep the ignition switch in the OFF position.
2. Disconnect the main relay connector.
3. Check for continuity between the BLK wire ② in the connector and body ground.
4. Attach the positive probe of voltmeter to the YEL/BLK wire ① and the negative probe to the BLK wire ②.

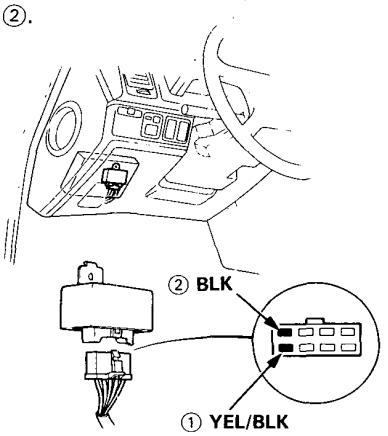

Battery voltage should be available.

- If there is no voltage, check the wiring between the battery and the main relay as well as ECU fuse (15A) in the under-hood relay box.

5. Attach the positive probe of voltmeter to the BLK/YEL wire ⑤ and the negative probe to the BLK wire ②.

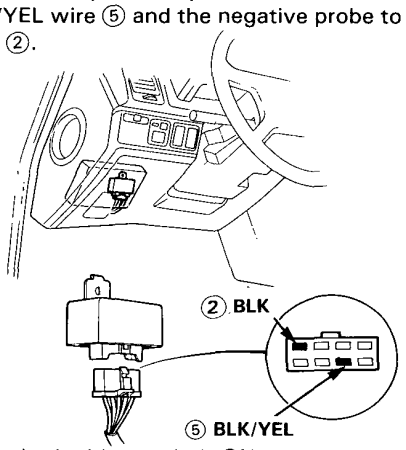

6. Turn the ignition switch ON.

Battery voltage should be available.

- If there is no voltage, check the wiring from the ignition switch and the main relay as well as No. 11 (7.5A) fuse.

7. Attach the positive probe of voltmeter to the BLK/WHT wire ④ and the negative probe to the BLK wire ②.

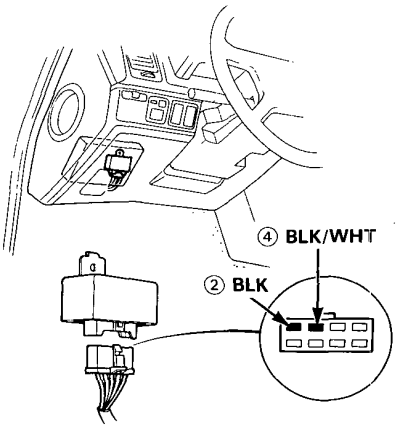

8. Turn the ignition switch to START position.

Battery voltage should be available.

- If there is no voltage, check the wiring between the ignition switch and main relay as well as No. 12 (7.5A) fuse.

9. Connect a jumper wire between the two BLK/YEL wires ⑤ and ⑦.

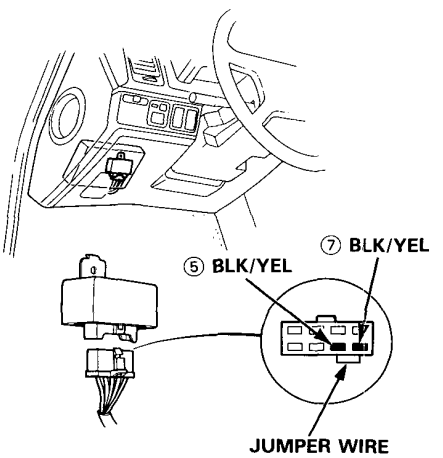

10. Turn the ignition switch ON.

The fuel pump should work.

- If the fuel pump does not work, check the wiring between the main relay and fuel pump, and the wiring from the fuel pump to the ground (BLK wire).

Fuel Tank

Replacement

WARNING **Do not smoke while working on fuel system. Keep open flame away from work area.**

1. Block front wheels. Jack up the rear of the car and support with jackstands.
2. Remove the drain bolt and drain the fuel into an approved container.
3. Remove the maintenance access cover in the luggage area.
4. Disconnect the connectors of the fuel gauge sending unit and the fuel pump, then remove the fuel feed line.
5. Disconnect the hoses.

   CAUTION: When disconnecting the hoses, slide back the clamps, then twist hoses as you pull, to avoid damaging them.
6. Place a jack, or other support, under the tank.
7. Remove the strap nuts and let the straps fall free.
8. Remove the fuel tank.

   NOTE: The tank may stick on the undercoat applied to its mount. To remove, carefully pry it off the mount.
9. Install a new washer on the drain bolt, then install parts in the reverse order of removal.

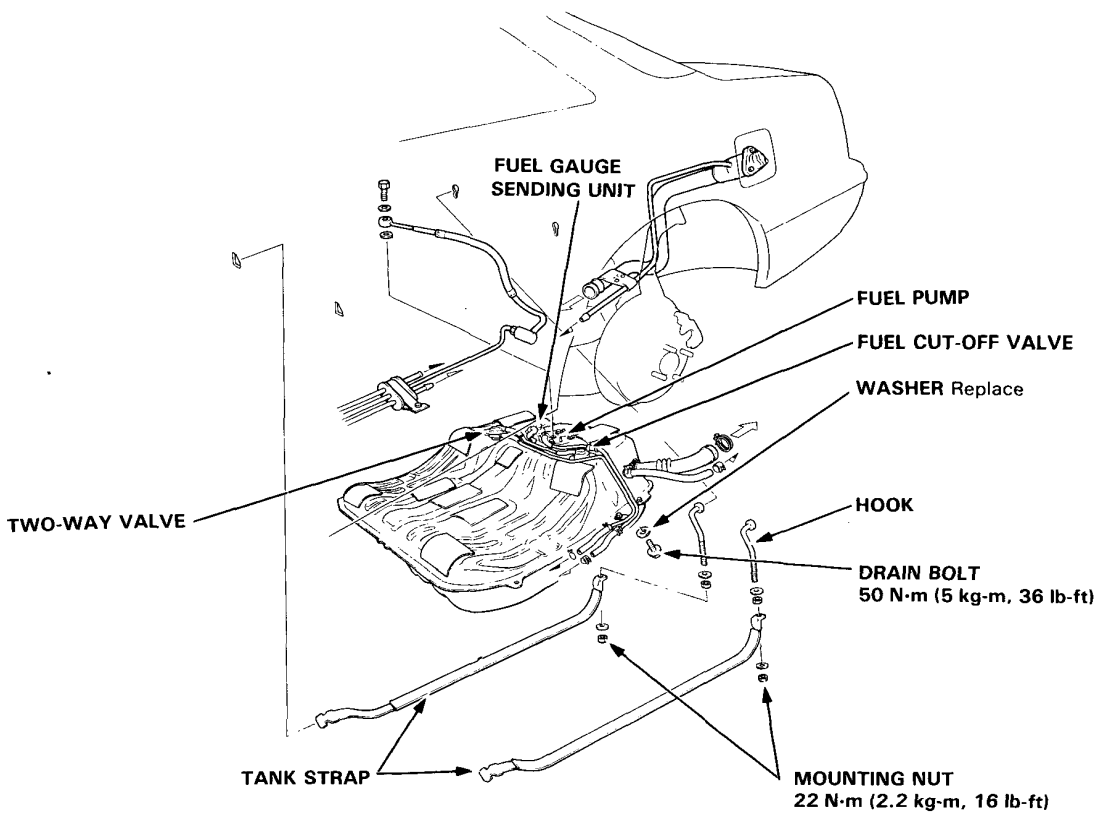

Air Intake System

Symptom-to-Sub System Chart

NOTE: Across each row in the chart, the sub systems that could be sources of a symptom are ranked in the order they should be inspected, starting with ①. Find the symptom in the left column, read across to the most likely source, then refer to the page listed at the top of that column. If inspection shows the system is OK, try the next system ②, etc.

PAGE / SUB SYSTEM		THROTTLE CABLE	THROTTLE BODY	DASHPOT SYSTEM	BYPASS CONTROL SYSTEM
SYMPTOM		89	90	92	93
IRREGULAR IDLING	WHEN WARM IDLE SPEED OUT OF SPECIFIED RPM	②	①		
FREQUENT STALLING WHILE WARMING UP		①			
POOR PERFORMANCE	LOSS OF POWER	②	②		①

Throttle Cable

Inspection/Adjustment

1. Warm up the engine to normal operating temperature (cooling fan comes on).

2. Check that the throttle cable operates smoothly with no binding or sticking. Repair as necessary.

3. Check cable free play at the throttle linkage. Cable deflection should be 10—12 mm (0.39—0.47 in.)

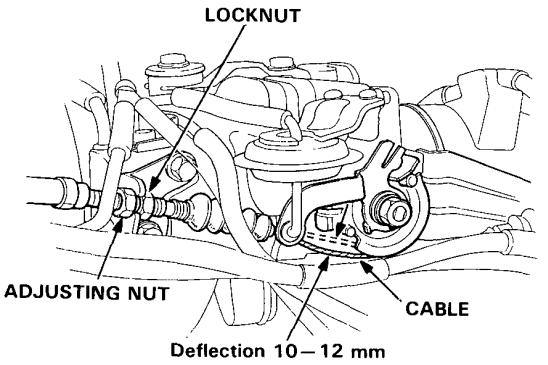

4. If deflection is not within specs, loosen the locknut and turn the adjusting nut until the deflection is as specified.

5. With the cable properly adjusted, check the throttle valve to be sure it opens fully when you push the accelerator pedal to the floor. Also check the throttle valve to be sure it returns to the idle position whenever you release the accelerator.

Replacement

1. Loosen the locknut and remove the throttle cable from the cable bracket.

2. Remove the cable from the throttle linkage.

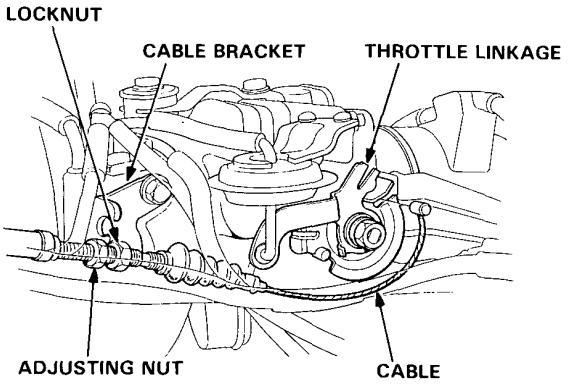

3. Hold the cable sheath, removing all slack from the cable.

4. Turn the adjusting nut until it is 3 mm away from the cable bracket.

5. Tighten the locknut. The cable deflection should now be 10—12 mm (0.39—0.47 in.). If not, see Inspection/Adjustment.

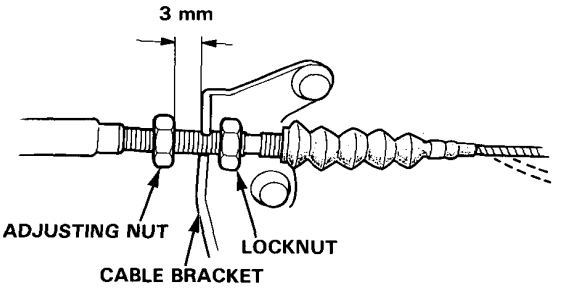

Throttle Body

Inspection

CAUTION: Do not adjust the throttle stop screw since it can not be reset except at the factory.

1. Start the engine and allow to reach normal operating temperature (cooling fan comes on).

2. Disconnect the vacuum hose (to the canister) from the top of the throttle body; connect a vacuum gauge to the throttle body.

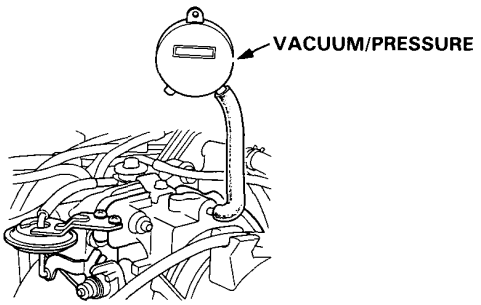

3. Allow the engine to idle and check that the gauge indicates no vacuum.

4. Check that vacuum is indicated on the gauge when the throttle is opened slightly from idle.

   - If the gauge indicates no vacuum, check the canister port. If the canister port is clogged, clean it with carburetor cleaner.

5. Stop the engine and check that the throttle cable operates smoothly without binding or sticking.

   - If there are any abnormalities in the above steps, check for:

   – Excessive wear or play in the throttle valve shaft.
   – Sticky or binding throttle lever at full close position.
   – Clearance between throttle stop screw and throttle lever at full close position.

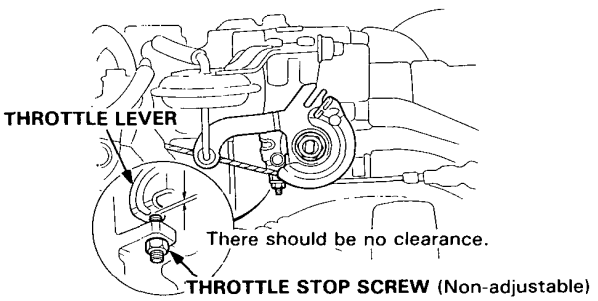

Replace the throttle body if there is excessive play in the throttle valve shaft or if the shaft is binding or sticking.

Disassembly

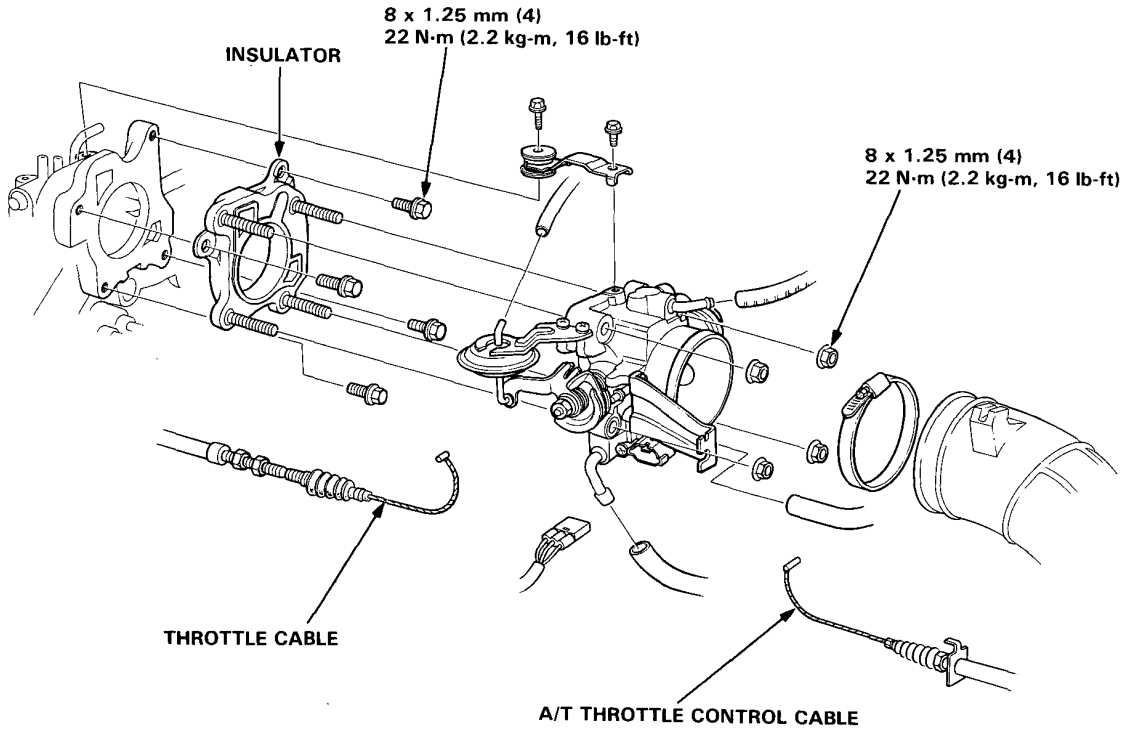

CAUTION:

- The throttle stop screw is non-adjustable.
- **After reassembly, adjust the throttle cable (page 6-89), and A/T throttle control cable (section 14) for cars with A/T.**

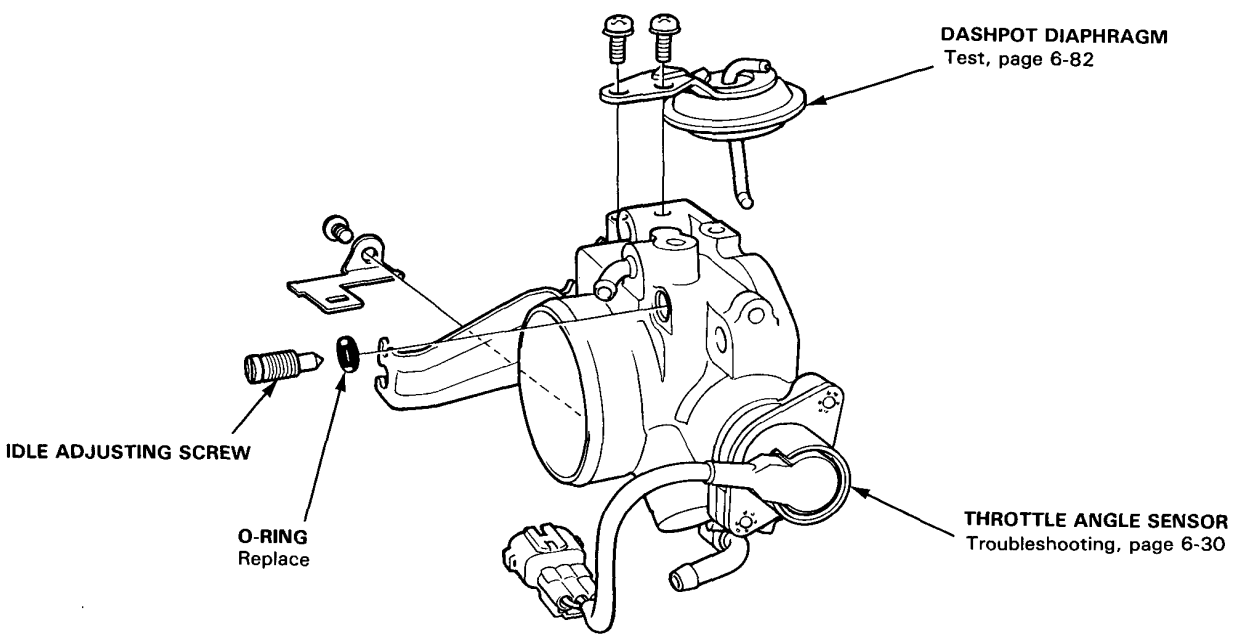

Dashpot System

Test

1. Check the vacuum line for leaks, blockage or a disconnected hose.

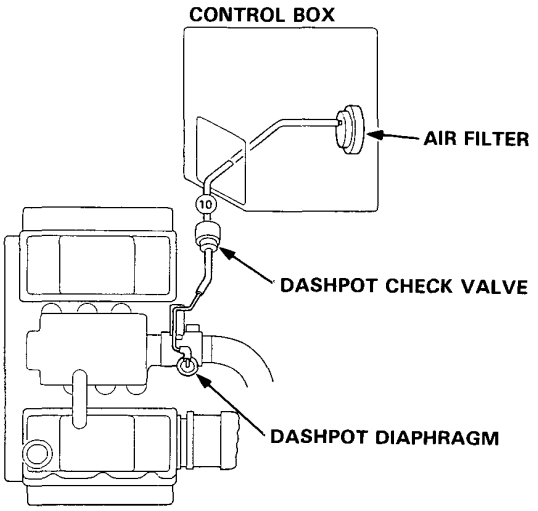

2. Disconnect # 10 vacuum hose from the dashpot diaphragm, and connect a vacuum pump to the hose.

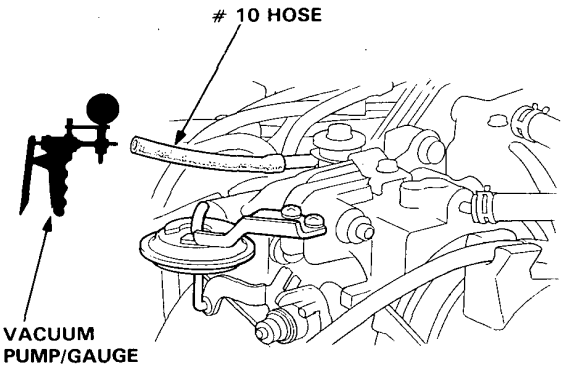

3. Apply vacuum and check the speed the vacuum goes out.

   Vacuum should go out slowly.

   - If the vacuum holds or goes out quickly, replace the dashpot check valve and retest.

4. Connect a vacuum pump to the dashpot diaphragm.

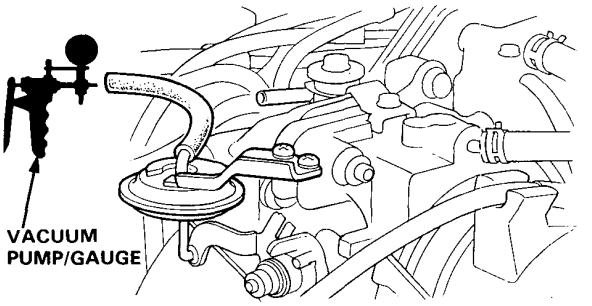

5. Apply vacuum and check that the rod pulls in and vacuum holds.

   - If the vacuum does not hold or the rod does not move, replace the dashpot diaphragm and retest.

Troubleshooting Flow Chart

Inspection of Bypass Control System

NOTE: Check for normal operation of the bypass valve in the intake manifold prior to checking the system (page 6-96).

Start engine and allow to idle.

Remove #2 vacuum hose from the bypass control diaphragm and connect vacuum gauge to the hose.

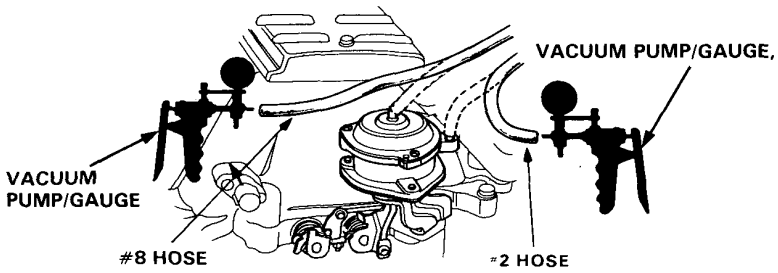

Is there vacuum?

NO → Remove #12 vacuum hose from the vacuum tank A, then check for vacuum at the tank.

Is there vacuum?

NO → Check the vacuum line between the vacuum tank A and the intake manifold.

YES

Disconnect 6P connector.

Measure voltage between BLK/YEL (+) terminal and RED/BLU (–) terminal.

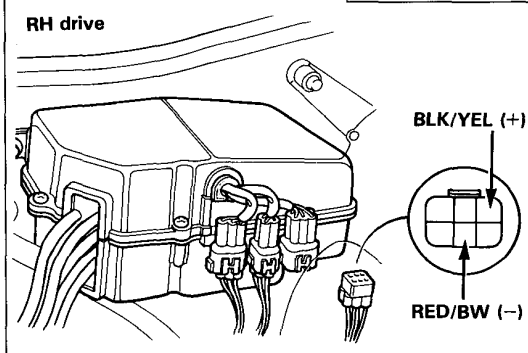

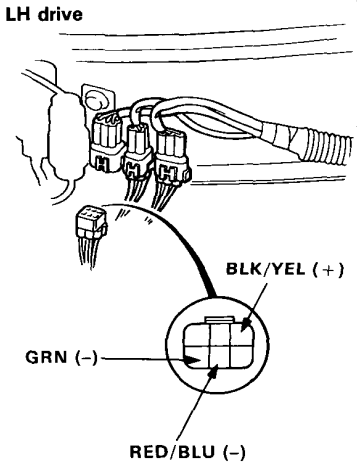

Is there battery voltage?

YES → Replace the bypass control solenoid valve A and retest.

NO

Measure voltage between BLK/YEL (+) terminal and body ground.

(To page 6-94)

(To page 6-94)

(cont'd)

Bypass Control System

Troubleshooting Flow Chart (cont'd)

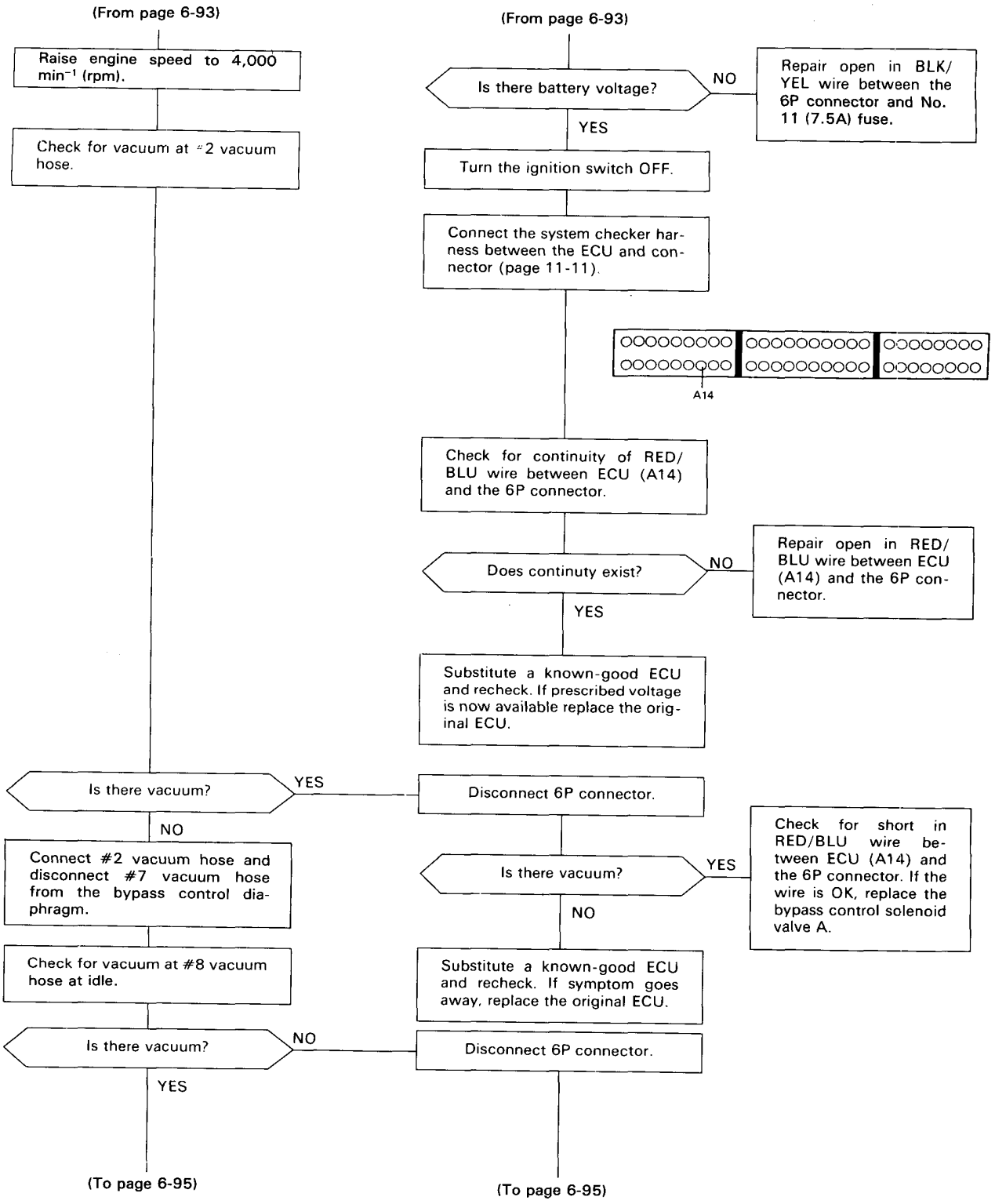

(From page 6-94)

Raise engine speed to 3,500 min^{-1} (rpm).

Check for vacuum at #7 vacuum hose.

Is there vacuum?

- YES → Disconnect 6P connector.
- NO → Bypass control system is OK.

(From page 6-94)

Measure voltage between BLK/YEL (+) terminal and GRN (–) terminal

Is there battery voltage?

- YES → Replace the bypass control solenoid valve B and retest.
- NO → Measure voltage between BLK/YEL (+) terminal and body ground.

Is there battery voltage?

- NO → Repair open in BLK/YEL wire between the 6P connector and No. 11 (7.5A) fuse.
- YES → Turn the ignition switch OFF.

Connect the PGM-FI test harness between the ECU and connector (page 6-23).

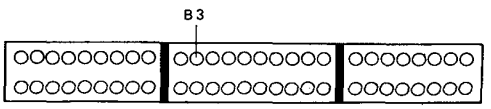

Check for continuity of GRN wire between the ECU (B3) and the 6P connector.

Does continuty exist?

- NO → Repair open in GRN wire between ECU (B3) and the 6P connector.
- YES → Substitute a known-good ECU and recheck. If prescribed voltage is now available, replace the original ECU.

Disconnect 6P connector.

Is there vacuum?

- YES → Check for short in GRN wire between ECU (B3) and the 6P connector. If the wire is OK, replace the bypass control solenoid valve B.
- NO → Substitute a known-good ECU and recheck. If symptom goes away, replace the original ECU.

Bypass Control System

Bypass Valve Test

CAUTION: Do not adjust the bypass valve full-close screw. It was preset at the factory.

1. Check the bypass valve shaft for binding or sticking.

2. Check the bypass valve for smooth movement.

3. Check that (A) of the bypass valve is in close contact with the stopper when the bypass valve is fully open.

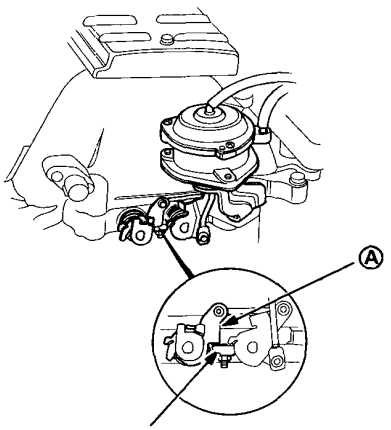

4. Check that (B) of the bypass valve is in close contact with the full-close screw when the valve is fully closed.

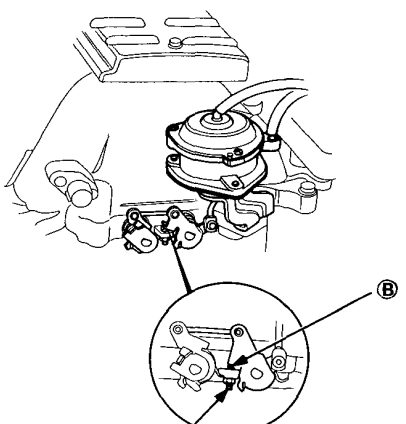

- If any fault is found, clean the linkage and shafts with carburetor cleaner.
  - If the problem still exists after cleaning, disassemble the intake manifold and check the bypass valve (page 6-97).

Bypass Valve Body Disassembly

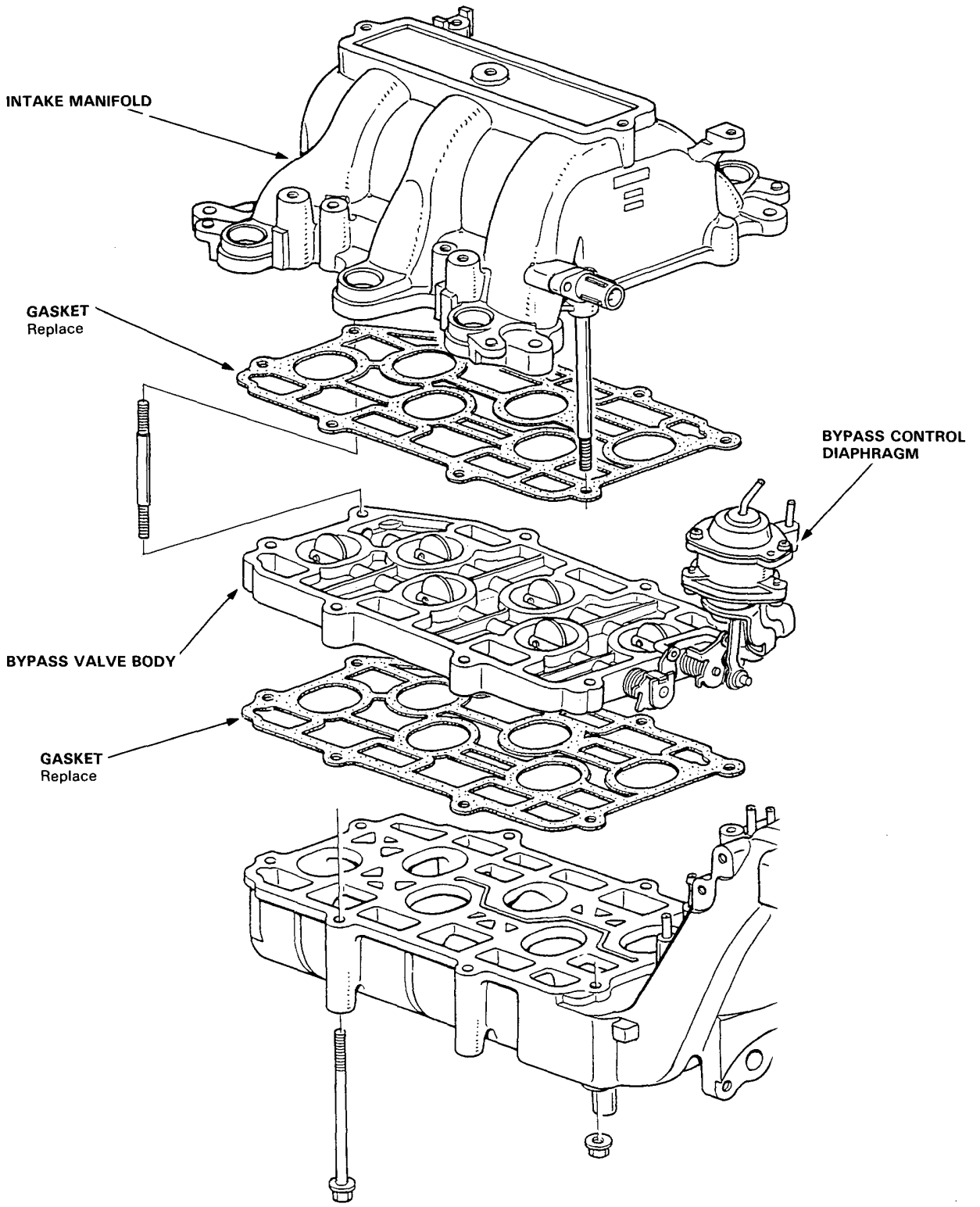

Emission Control System

Symptom-to-Sub System Chart

NOTE: Across each row in the chart, the sub systems that could be sources of a symptom are ranked in the order they should be inspected, starting with ①. Find the system in the left column, read across to the most likely source, then refer to the page listed at the top of that column. If inspection shows the system is OK, try the next system ②, etc.

PAGE / SUB SYSTEM		CATALYTIC CONVERTER	AIR INJECTION SYSTEM (KG, KX)	EGR SYSTEM (Except KQ)	POSITIVE CRANKCASE VENTILATION SYSTEM	EVAPORATIVE EMISSION CONTROLS
SYMPTOM		99	100	102	106	107
IRREGULAR IDLING	ROUGH IDLE			①		
	WHEN WARM RPM TOO HIGH				①	
FREQUENT STALLING				①		
POOR PERFORMANCE	FAILS EMISSION TEST	①		②		③
	LOSS OF POWER	①		②		

Tailpipe Emission

Inspection

WARNING Do not smoke during this procedure. Keep any open flame away from your work area.

1. Start the engine and warm up to normal operating temperature (cooling fan comes on).
2. Connect tachometer.
3. Check idle speed and adjust the idle speed, if necessary (page 6-75).
4. Warm up and calibrate the CO meter according to the meter manufacturer's instructions.
5. Check idle CO with the headlights, heater blower, rear window defogger, cooling fan, and air conditioner off.

   CO meter should indicate:
   KG, KX, KQ Model: 0.1 % Maximum.
   KE, KB, KF Model: 1.0 ± 1.0 Maximum.

   - If unable to obtain this reading;
     On KG, KX, KQ models, see ECU troubleshooting (page 6-25).
     On KE, KB, KF Models, adjust by turning adjusting screw of the IMA sensor.

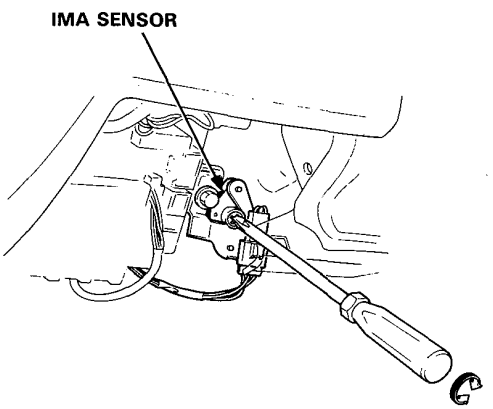

   — If unable to obtain a CO reading of specified % by this procedure, check the engine tune-up condition.

Catalytic Converter

Inspection

If excessive exhaust system back-pressure is suspected, remove the catalytic converter from the car and make a visual check for plugging, melting or cracking of the catalyst. Replace the catalytic converter if more than 50% of the visible area is damaged or plugged.

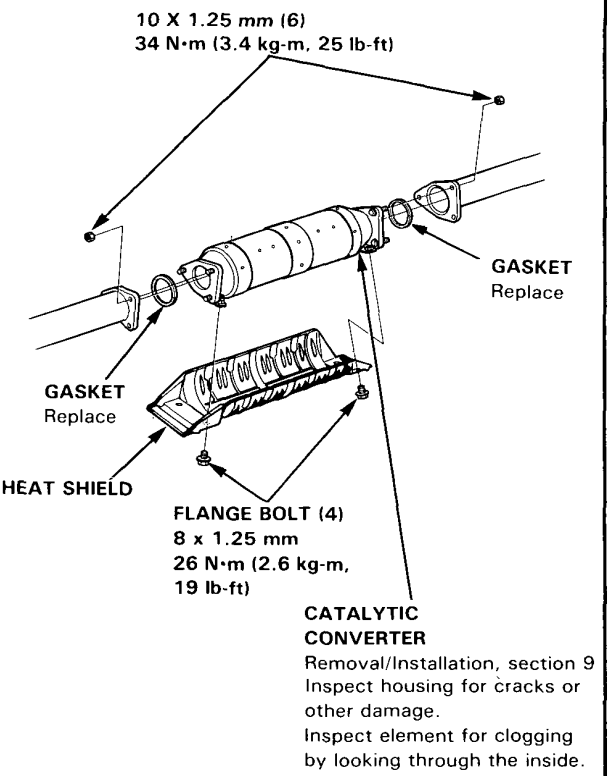

Test

1. Check the vacuum line for proper connection, cracks, blockage or disconnected hose.

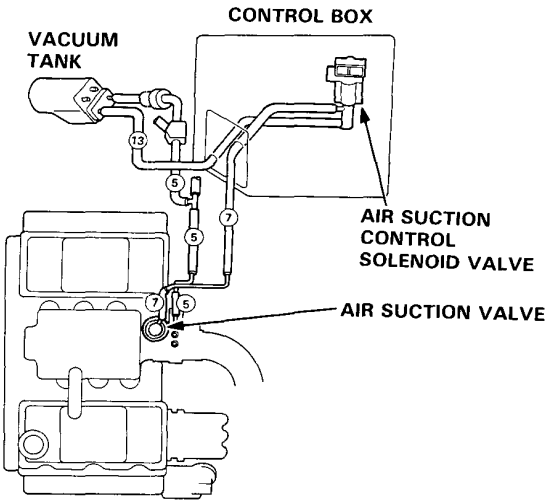

2. Warm up the engine (cooling fan comes on).
3. Stop the engine.
4. Restart the engine.
5. Within 10 seconds after restart, check for air suction noise (bubbling noise) from the air suction valve at idle.

   Bubbling noise should be heard.

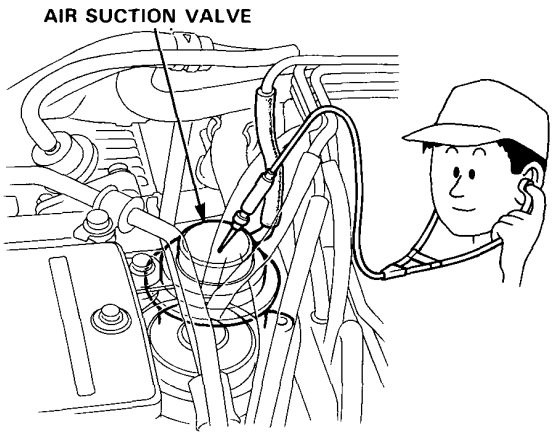

- If bubbling noise is not heard, disconnect #7 vacuum hose from the top of air suction valve and check for vacuum within 10 seconds after restart.

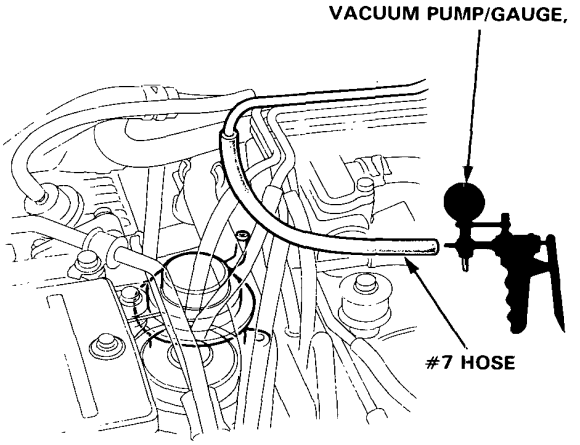

There should be vacuum.

— If there is vacuum, replace the air suction valve and retest.
— If there is no vacuum, go to air suction control solenoid valve test I (page 6-101).

6. Stop the engine.
7. Check for air suction noise from the air suction valve at idle 15 seconds after restart.

   Bubbling noise should not be heard.

- If bubbling noise is not heard, test is complete.
- If bubbling noise is heard, go to air suction control solenoid valve test II (page 6-101).

Solenoid Valve Test

Test I:

1. Start the engine and warm up to normal operating temperature (cooling fan comes on).

2. Disconnect the #5 vacuum hose from the intake manifold, and check the vacuum.

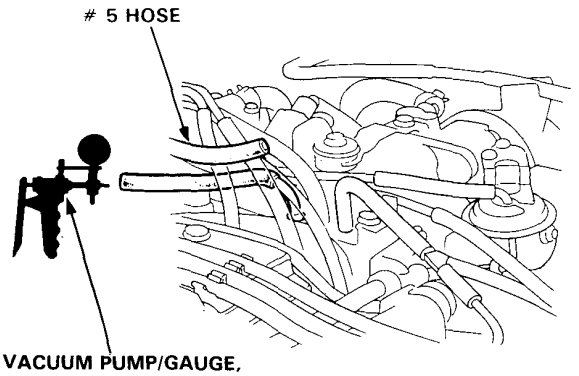

- If there is no vacuum, check the vacuum port.
- If there is vacuum, check the vacuum line for proper connection, cracks, blockage or disconnected hose. If the vacuum line is OK, reconnect the hose.

3. Disconnect the 6P connector.

4. Attach the positive probe of the voltmeter to BLK/YEL terminal and the negative probe to PNK terminal.

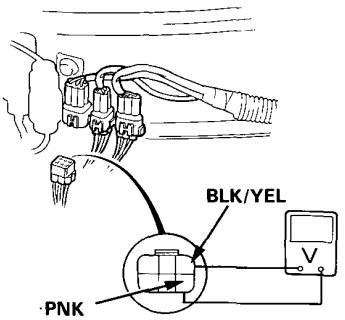

5. Within 10 seconds after restarting the engine, check the voltage at idle.
   - If there is voltage, replace the solenoid valve and retest.
   - If there is no voltage, attach the positive probe of the voltmeter to BLK/YEL terminal, and the negative probe to body ground. Within 20 seconds after restarting the engine, check the voltage.
     - If there is no voltage, repair open circuit in BLK/YEL wire between the solenoid valve and No. 11 (7.5A) fuse
     - If there is voltage, check for an open in PNK wire between the solenoid valve and ECU. If wire is OK, substitute a known-good ECU and retest. If symptom goes away, replace the original ECU.

Test II:

1. Start the engine and warm up to normal operating temperature (cooling fan comes on).

2. Disconnect the 6P connector.

3. Attach the positive probe of the voltmeter to BLK/YEL terminal and the negative probe to PNK terminal.

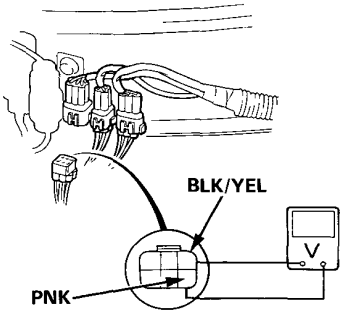

4. Check the voltage at idle 15 seconds after starting the engine.
   - If there is voltage, check for a short in PNK wire between the solenoid valve and ECU. If wire is OK, substitute a known-good ECU and retest. If symptom goes away, replace the original ECU.
   - If there is no voltage, replace the solenoid valve and retest.

Exhaust Gas Recirculation System (Except KQ)

Troubleshooting Flow Chart —— EGR System

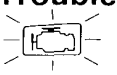

Self diagnosis indicator blinks twelve times: Most likely a problem in the Exhaust Gas Recirculation (EGR) system.

–Check engine warning light has been reported.
–Red LED indicates CODE 12.

Verify that all connectors between the EGR valve lift sensor and the PGM-FI ECU are securely connected.

Warm up engine to normal operating temperature (cooling fan comes on).

Disconnect #11 hose from EGR control solenoid valve.

Connect vacuum pump to EGR valve and apply vacuum.

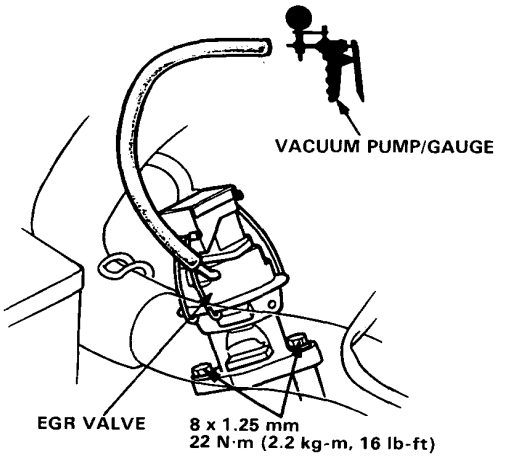

Does EGR valve hold vacuum? Did engine stall?

NO → Check #11 hose for damage or clogged. Replace EGR valve if #11 hole is OK.

YES

Disconnect the #5 hose (between the vacuum hose manifold and the 3-way joint) from the 3-way joint and connect vacuum gauge to the hose.

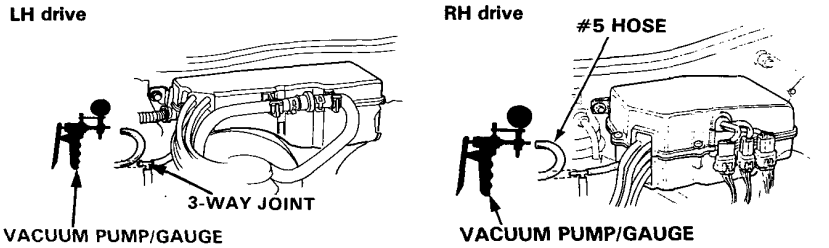

Restart engine and check for vacuum.

Is there vacuum?

NO → Repair blockage at port or pinch in the #5 hose.

YES

Reconnect the #5 hose.

Disconnect the EGR solenoid valve hose from the CVC valve.

(To page 6-103)

(From page 6-102)

Is there vacuum approx. 8"?

NO → Check the EGR solenoid valve hose for damage or clogged. Replace CVC valve if EGR solenoid valve hose is OK?

YES

Reconnect the EGR solenoid valve and disconnect #11 hose from EGR valve. Connect vacuum gauge to the hose.

Is there vacuum?

YES → Repair short in WHT wire between ECU (A10) and EGR control solenoid valve.

NO

Disconnect 6P connector on the right side of the firewall.

Connect the battery positive terminal to the YEL/BLK terminal and the negative terminal to the WHT terminal.

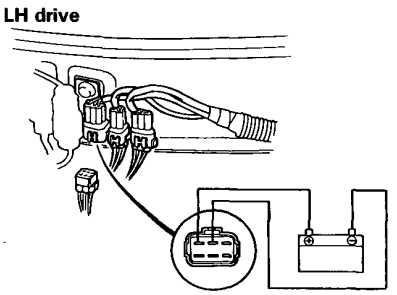

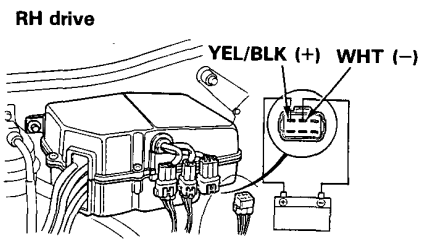

Is vacuum approx. 8"?

NO → Replace EGR control solenoid valve.

YES

Measure voltage between BLK/YEL (+) terminal on the R. side wire harness and body ground.

Is there battery voltage?

NO → Repair open in BLK/YEL wire between the solenoid valve and No. 9 fuse.

YES

Turn the ignition switch OFF.

(To page 6-104)

(cont'd)

(From page 6-103)

Connect the test harness between the EGR valve lift sensor and engine wire harness.

Turn the ignition switch ON.

Measure voltage between RED (+) terminal and GRN (–) terminal.

Is there approx. 5V?

NO → Measure voltage between RED (+) terminal and body ground.

Is there approx. 5V?

YES → Repair open in GRN/WHT wire between ECU (C14) and the sensor.

NO → Turn the ignition switch OFF.

Connect the PGM-FI test harness between the ECU and connector (page 11-11).

Turn the ignition switch ON.

Measure voltage between C13 (+) terminal and C14 (–) terminal.

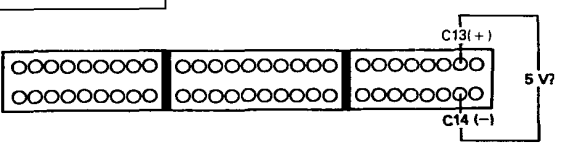

YES → Measure voltage between WHT (+) terminal and GRN (–) terminal.

Is there approx. 1V?

NO → –Replace EGR valve.
–Repair short in WHT/GRN wire between ECU (C8) and EGR valve lift sensor.

YES → Turn the ignition switch OFF.

Connect the PGM-FI test harness between the ECU and connector (page 11-11).

Turn the ignition switch ON.

Measure voltage between C8 (+) terminal and C14 (–) terminal.

(To page 6-105)

(To page 6-105)

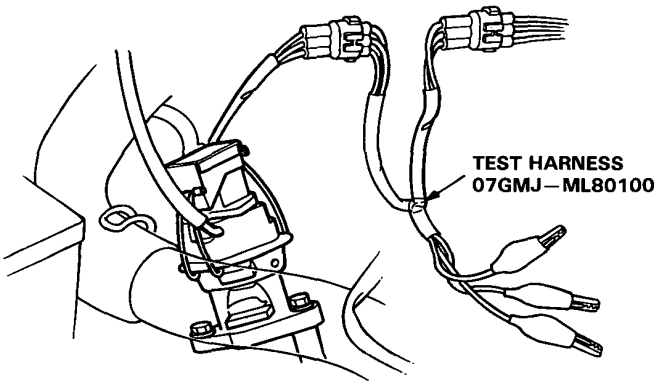

(From page 6-104)

(From page 6-104)

Is there approx. 5 V?

YES → Repair open in YEL/WHT wire between ECU (C13) and the sensor.

NO → Substitute a known-good ECU and recheck. If prescribed voltage is now available, replace the original ECU.

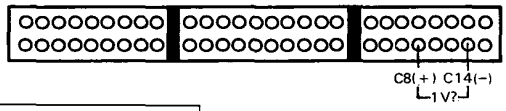

Is there approx. 1V?

NO → Repair open in WHT/GRN wire between ECU (C8) and the sensor.

YES → Disconnect "A" connector from the ECU only, not R. side wire harness.

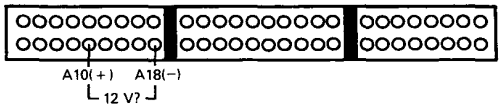

Measure voltage between A10 (+) terminal and A18 (−) terminal.

Is there battery voltage?

NO → Repair open in WHT wire between ECU (A10) and EGR control solenoid valve.

YES → Substitute a known-good ECU and recheck. If symptom/indication goes away, replace the original ECU.

Positive Crankcase Ventilation System

Inspection

1. Check the crankcase ventilation hoses and connections for leaks and clogging.

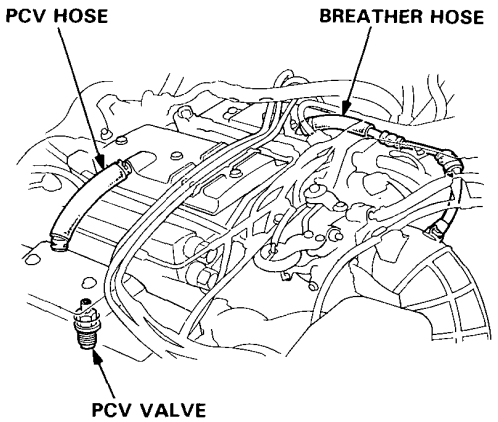

2. Remove the breather chamber cover and connect a vacuum pump to the PCV valve.

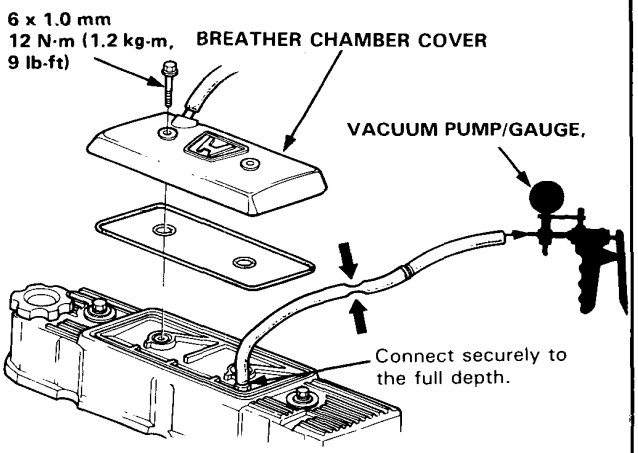

3. Pinch the hose as illustrated above, apply 400–500 mmHg (16–20 in.Hg) of vacuum then unpinch the hose and quickly check for a clicking sound on the PCV valve.

   - If no clicking sound is heard, replace PCV valve and recheck.

Test

COLD ENGINE

1. Check the vacuum line for proper connection, cracks, blockage or disconnected hose.

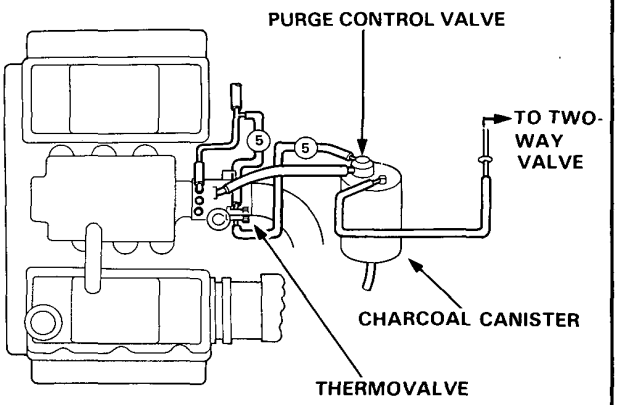

2. Disconnect #5 hose at the purge control diaphragm valve (on the charcoal canister) and connect a vacuum gauge to the hose.

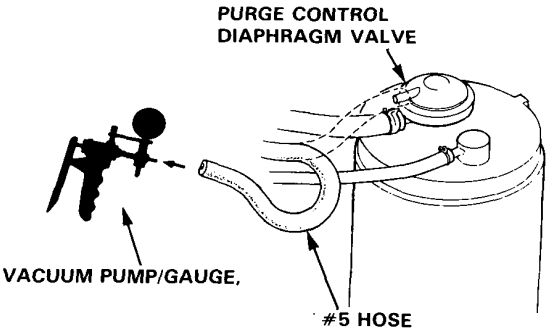

3. Start the engine and allow to idle.

   NOTE: Engine coolant temperature must be below 70°C (158°F).

   Vacuum should not be available.

   - If there is vacuum, replace the thermovalve and retest.

HOT ENGINE

1. Disconnect the #5 hose at the purge control diaphragm valve (on the charcoal canister) and connect a vacuum gauge to the hose.

2. Warm up the engine to normal operating temperature (cooling fan comes on).

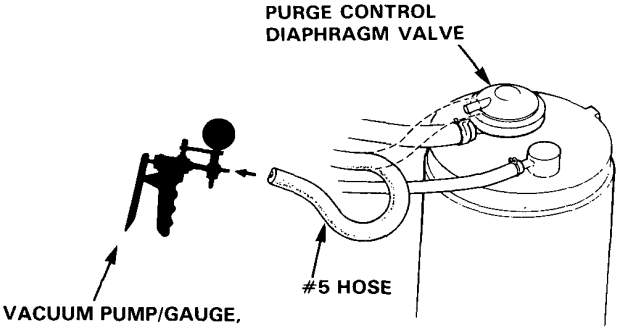

   There should be vacuum at idle, once the engine is warm.

   - If there is no vacuum, replace the thermovalve and retest.

3. Disconnect vacuum gauge and reconnect the hose.

4. Remove fuel filler cap.

5. Remove canister purge air hose from frame and connect hose to vacuum gauge as shown.

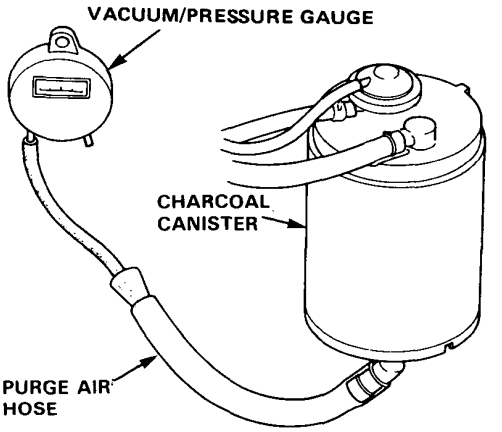

(cont'd)

Test (cont'd)

6. Raise engine speed to 3,500 rpm.
   Vacuum should appear on gauge within 1 minute.

   - If vacuum appears on gauge in 1 minute, remove gauge, test is complete.
   - If no vacuum, disconnect vacuum gauge and reinstall fuel filler cap.

7. Remove charcoal canister and check for signs of damage or defects.

   - If defective, replace canister.

8. Stop engine. Disconnect upper vacuum hose from canister "PCV" fitting.
   Connect a vacuum pump to canister "purge" fitting as shown, and apply vacuum.

   Vacuum should remain steady.

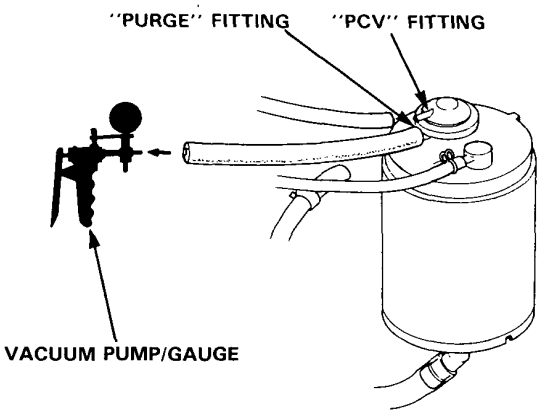

   - If vacuum drops, replace canister and retest.

9. Restart engine. Reconnect hose to canister "PCV" fitting.

   "PURGE" side vacuum should drop to zero.

   - If "PURGE" side vacuum does not drop to zero, replace the canister and retest.

Two-Way Valve

1. Remove the fuel filler cap.

2. Remove vapor line from the fuel tank and connect to T-fitting from vacuum gauge and vacuum pump as shown.

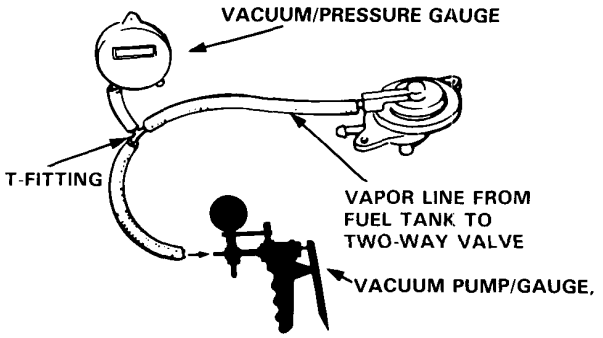

3. Slowly apply vacuum while watching the gauge.

   Vacuum should stabilize momentarily at 5 to 15 mmHg (0.2 to 0.6 in. Hg).

   - If vacuum stabilizes (valve opens) below 5 mmHg (0.2 in. Hg) or above 15 mmHg (0.6 in. Hg), install new valve and retest.

4. Move vacuum pump hose from vacuum to pressure fitting, and move vacuum gauge hose from vacuum to pressure side as shown.

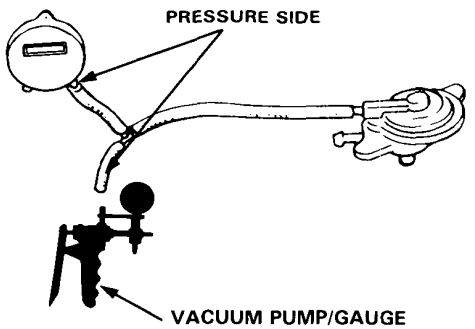

5. Slowly pressurize the vapor line while watching the gauge.

   Pressure should stabilize at 25 to 55 mmHg (1.0 to 2.2 in. Hg).

   - If pressure momentarily stabilizes (valve opens) at 25 to 55 mmHg (1.0 to 2.2 in. Hg), the valve is OK.
   - If pressure stabilizes below 25 mmHg (1.0 in. Hg) or above 55 mmHg (2.2 in. Hg), install a new valve and retest.

Troubleshooting Flow Chart

Inspect of Resonator Control System.

Start engine and allow to idle.

Remove the vacuum hose from the resonator diaphragm and connect a vacuum gauge to the hose.

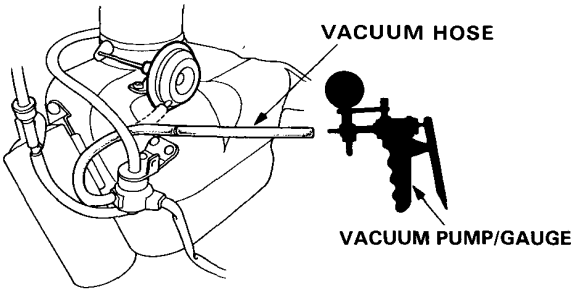

Is there vacuum?

- NO → Remove resonator control vacuum hose from surge tank, and check for vacuum at the tank.
  - Is there vacuum?
    - NO → Repair the blockage or vacuum leak between surge tank and intake manifold.
    - YES → Disconnect the 2P connector from the resonator control solenoid valve.
  - Measure voltage between BLK/YEL (+) terminal and RED/BLU (–) terminal.
  - Is there battery voltage?
    - YES → Replace the resonator control solenoid valve.
    - NO → Measure voltage between BLK/YEL (+) terminal and body ground.
- YES →

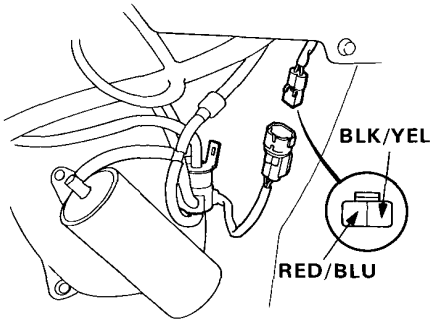

(To page 6-110)

(To page 6-110)

(cont'd)

Troubleshooling Flow chart (cont'd)

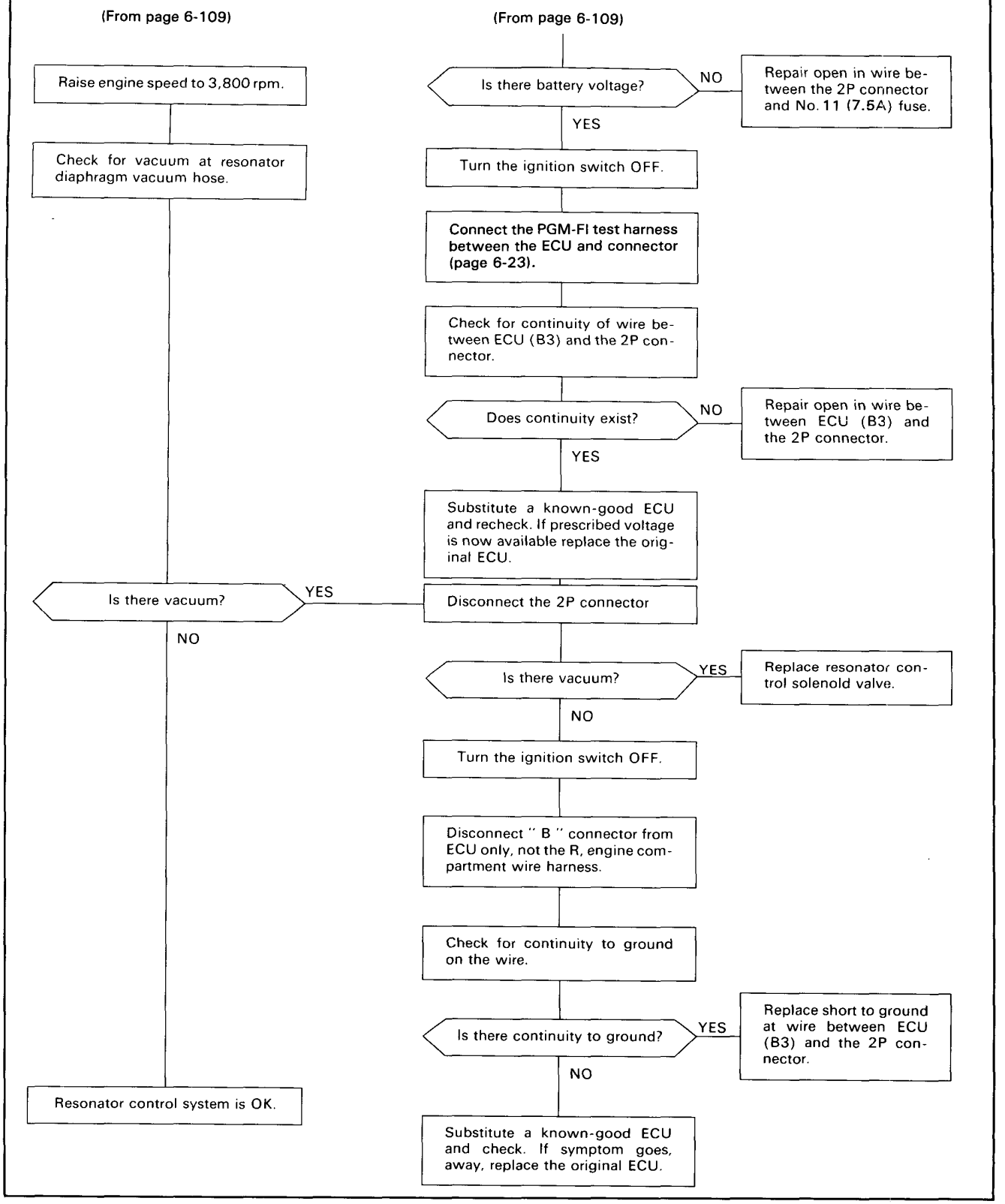

Clutch

Illustrated Index 7-2
Clutch Adjustment 7-3
Clutch Master Cylinder 7-4
Slave Cylinder 7-7
Release Bearing and Release Fork 7-9
Pressure Plate 7-10
Clutch Disc 7-11
Flywheel 7-12
Flywheel and Clutch Disc 7-12

Special Tool

Ref. No.	Tool Number	Description	Q'ty	Remarks
①	07GAG—PF50100	Clutch Disc Alignment Tool	1	
②	07924—PD20003	Ring Gear Holder	1	

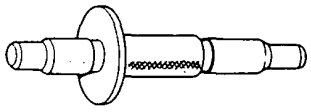

①

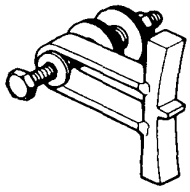

②

Clutch

Illustrated Index

NOTE: Whenever the transmission is removed, release bearing sliding surface should be cleaned and greased.

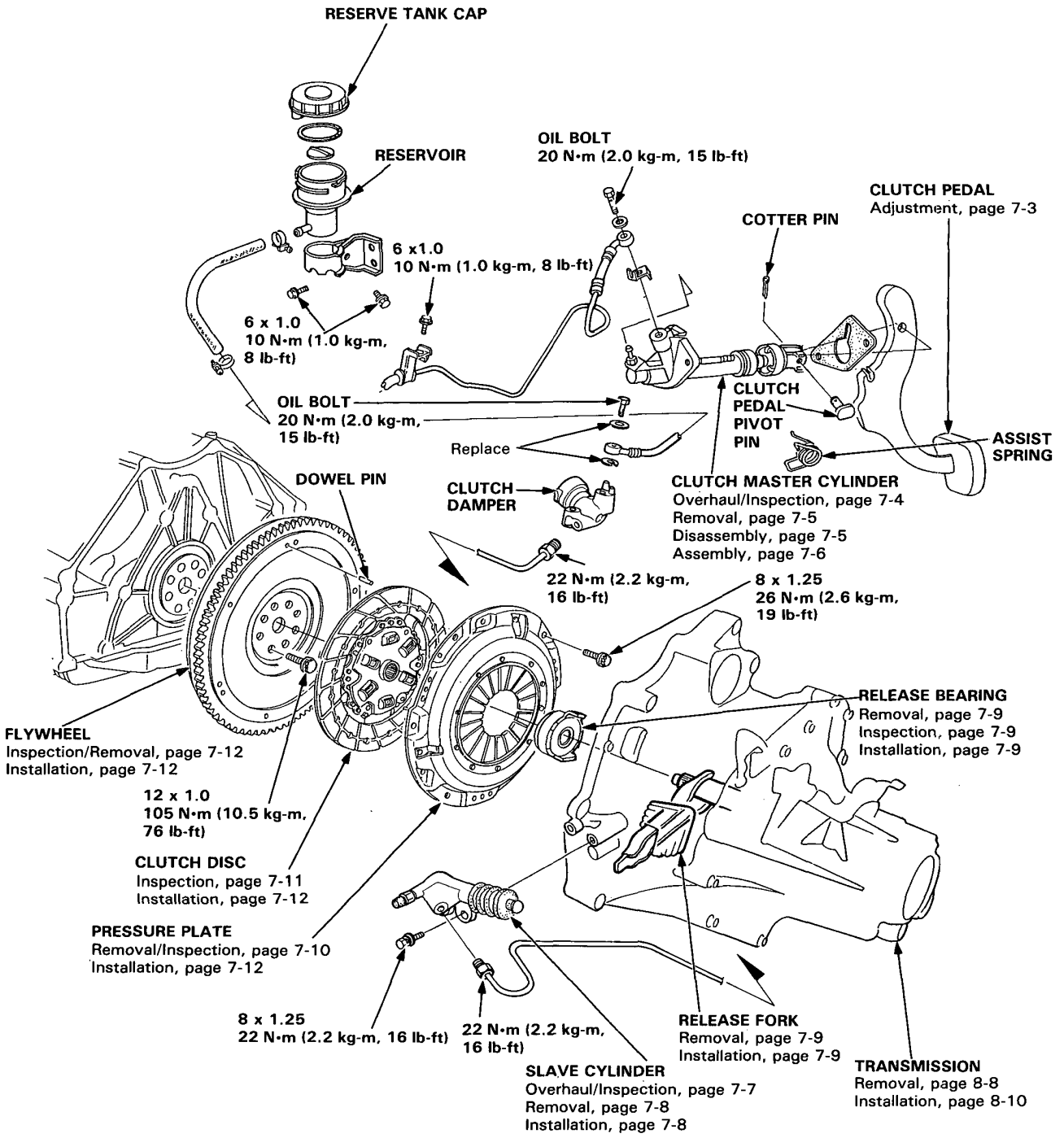

Adjustment

CLUTCH PEDAL SWITCH
Test, see section 16

LOCK NUT A
10 N·m (1.0 kg-m, 8 lb-ft)

LOCK NUT B
18 N·m (1.8 kg-m, 13 lb-ft)

PEDAL IN CONTACT WITH SWITCH

MASTER CYLINDER

GREASE

STROKE AT PEDAL:
145–150 mm
(5.7–5.9 in)

CLUTCH PEDAL HEIGHT:
153 mm (6.0 in) to carpet

CLUTCH ASSIST SPRING

GREASE

PEDAL PLAY
1–7 mm (0.04–0.28 in)
Determined by the clearance between the master cylinder piston and push rod.

CLUTCH PEDAL DISENGAGEMENT HEIGHT:
90 mm (3.54 in) minimum to the floor

Pedal Play

Total Free Play

NOTE: Total clutch pedal free play is 9–15 mm (0.35–0.59 in).

CAUTION: If there is no clearance between the master cylinder piston and push rod, the release bearing is held against the diaphragm spring, resulting in slippery clutch or other faulty clutch operation.

1. Loosen lock nut A, and back off the pedal switch until it no longer touches the clutch pedal.
2. Loosen lock nut B, and turn the push rod in or out to get the specified stroke and height at the clutch pedal.
3. Tighten lock nut B.
4. Screw in the clutch pedal switch until it contacts the clutch pedal.
5. Turn the switch in further 1/4–1/2 turn.
6. Tighten the lock nut A.

Clutch Master Cylinder

Overhaul/Inspection

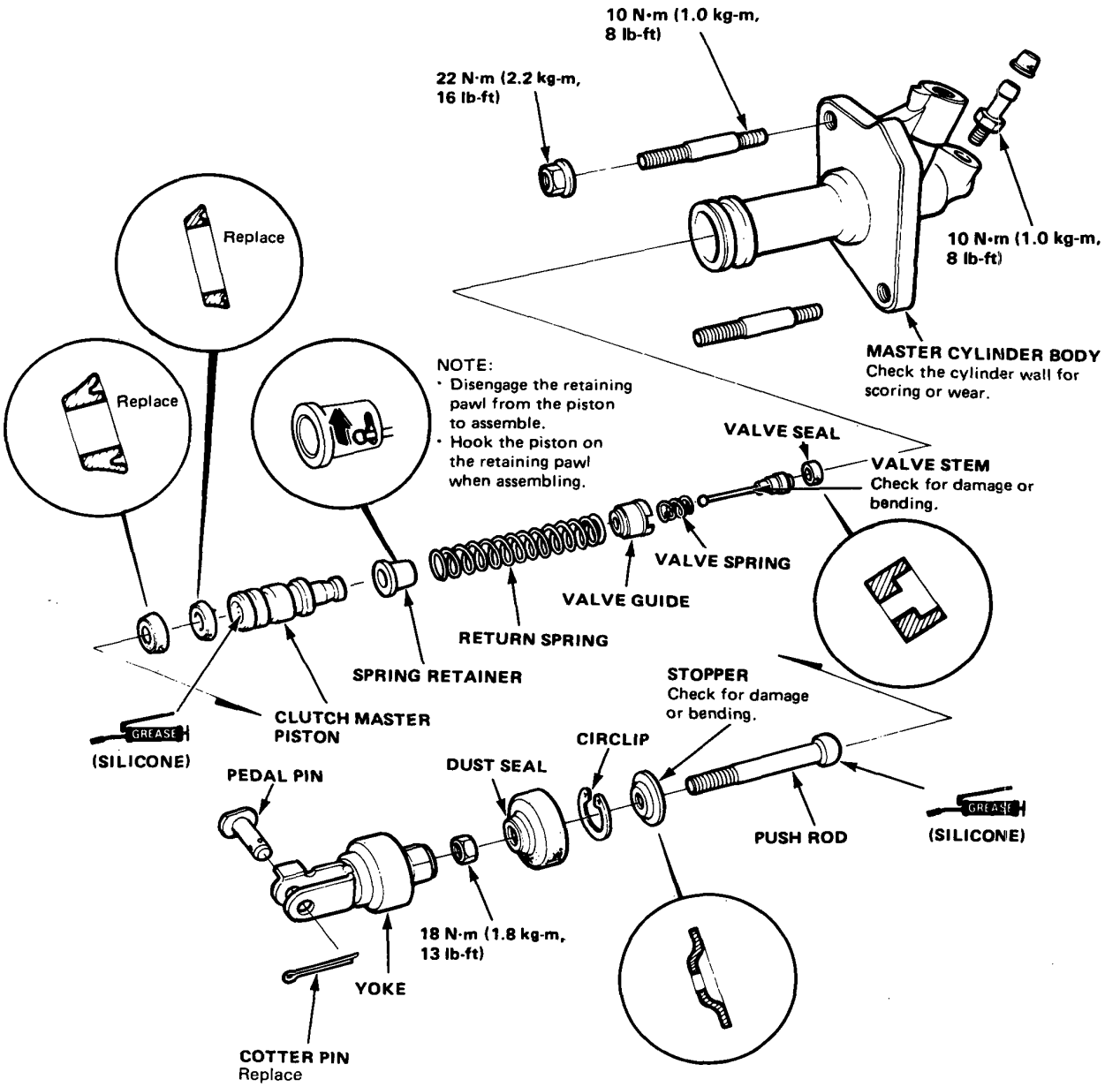

Removal

1. Pry out the cotter pin, and pull the pedal pin out of the yoke.

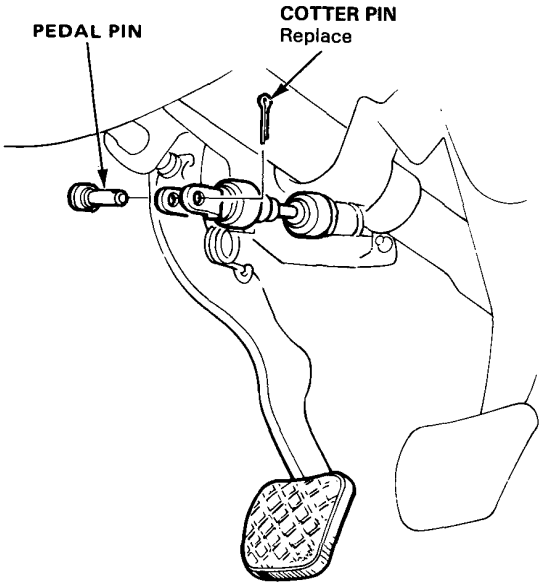

2. Remove the nuts attaching the master cylinder and remove the cylinder from the engine compartment.
3. Remove the banjo bolt and hose from the master cylinder.
4. Disconnect the other hose from the master cylinder by removing the clip.

CAUTION:
- **Avoid spilling brake fluid on paint as it may damage the finish.**
- **Plug the end of the clutch hose with a shop rag to prevent fluid from flowing out of the hose after disconnecting.**

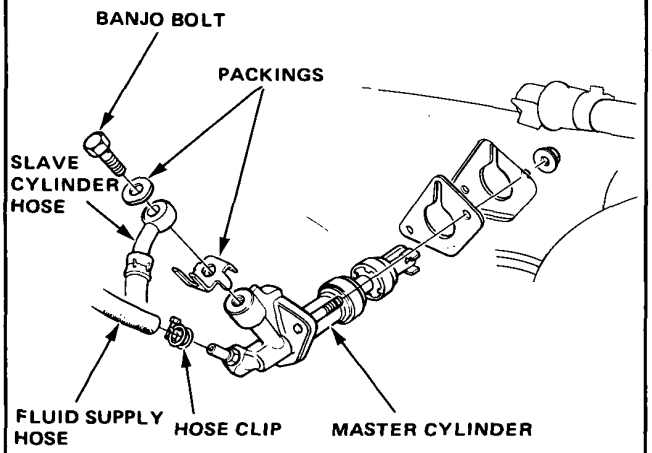

Disassembly

CAUTION: Avoid spilling brake fluid on paint as it may damage the finish.

1. Remove the dust seal from the master cylinder.
2. Pry the circlip off the master cylinder.

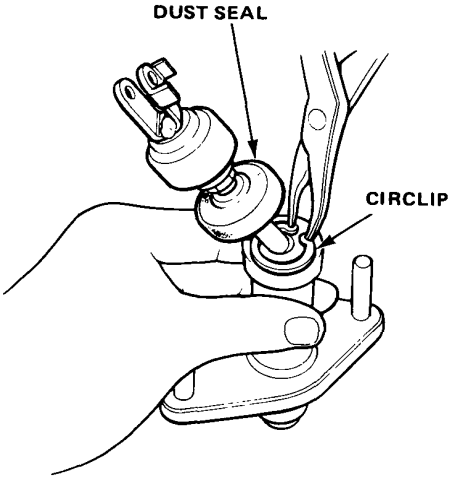

3. Carefully remove the piston by applying air pressure through the clutch line hole.

CAUTION:
- **Hold a shop rag over the master cylinder, to stop the piston in case it comes out suddenly.**
- **Plug the end of the clutch hose port with a shop rag to prevent fluid from coming out.**
- **Clean all disassembled parts in solvent and blow through all ports and passages with compressed air.**

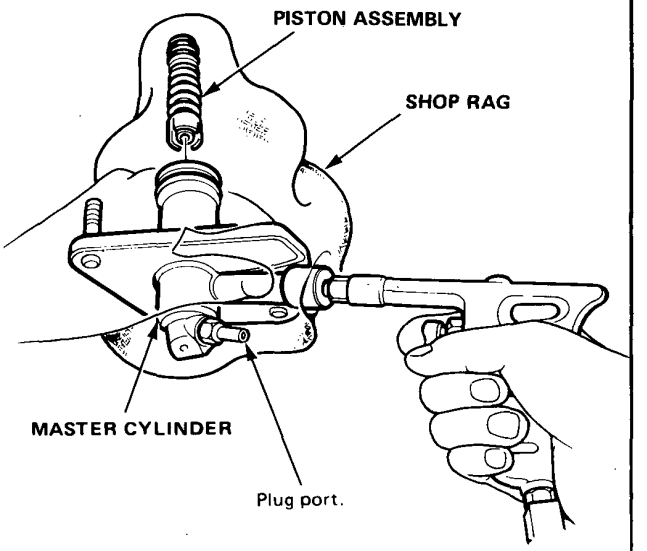

Clutch Master Cylinder

Assembly

CAUTION:
- Before assembling, make sure all parts are completely clean.
- Replace parts with new ones whenever specified to do so.
- Do not allow dust or water to enter the system.
- Do not mix different brands of brake fluid as they may not be compatible.
- Do not reuse the brake fluid which was drained out.
- Avoid spilling the brake fluid on painted surfaces, as it may damage the finish.

1. Assemble the piston noting the proper direction of the parts (page 7-4).

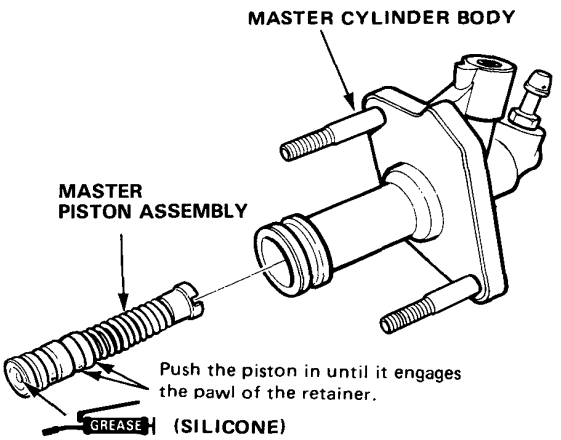

2. Slide the piston assembly into the master cylinder.
3. Install the circlip in the groove of the master cylinder.

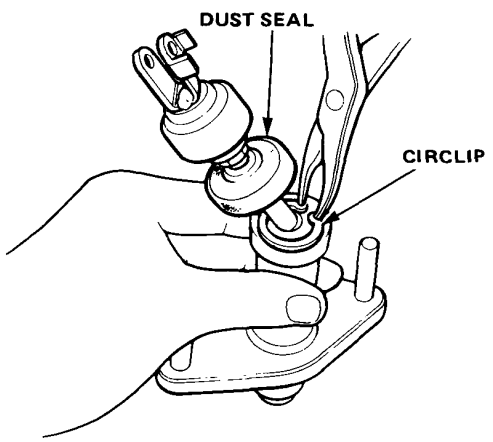

4. Install the dust seal.

Slave Cylinder

Overhaul/Inspection

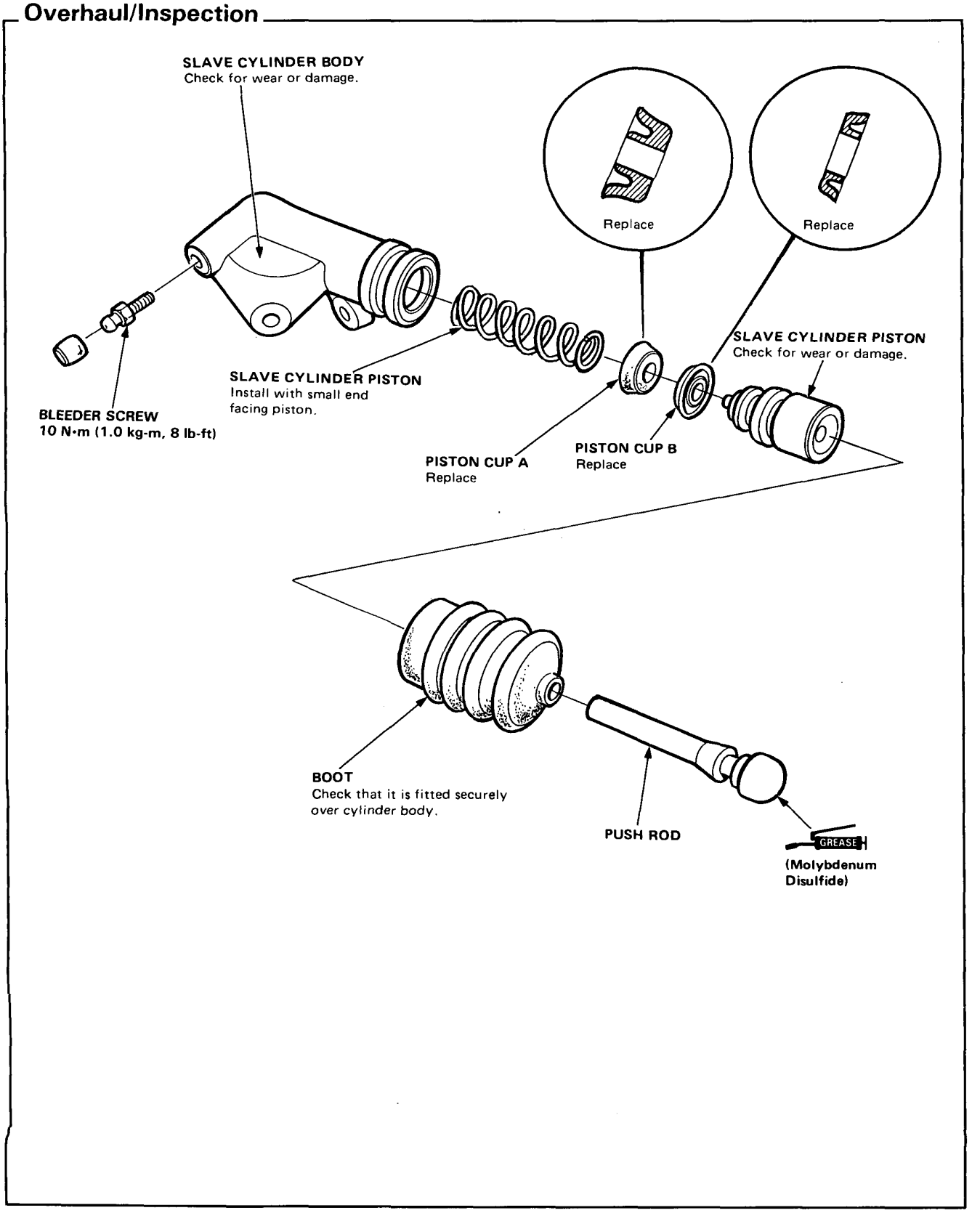

Slave Cylinder

Removal

1. Disconnect the clutch pipe from the slave cylinder.

   CAUTION:
   - **Avoid spilling brake fluid on the painted surfaces, as it may damage the finish.**
   - **Plug the end of the clutch pipe with a shop rag to prevent brake fluid from coming out.**

2. Remove the slave cylinder from the clutch case.

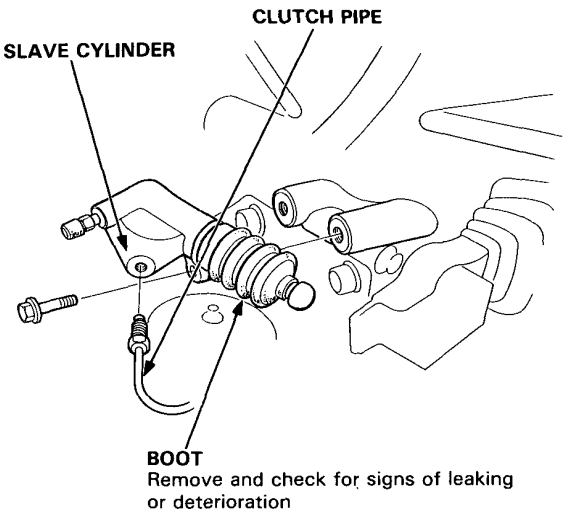

Installation

1. Install the slave cylinder assembly on the clutch case.

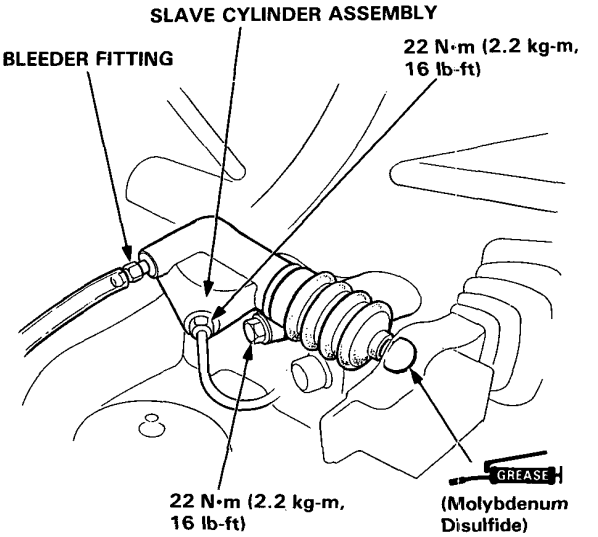

2. Bleed the clutch hydraulic system:
   - Attach a pipe to the bleeder fitting and suspend the hose in a container of brake fluid.
   - Make sure there is an adequate supply of fluid at the master cylinder, then slowly pump the clutch pedal until no more bubbles appear at the bleeder hose.
   - Re-fill the master cylinder fluid when done.

Release Bearing and Release Fork

Removal

NOTE: Remove the slave cylinder with the clutch pipe still connected.

1. Remove the boot from the clutch case, and remove the release fork and bearing.

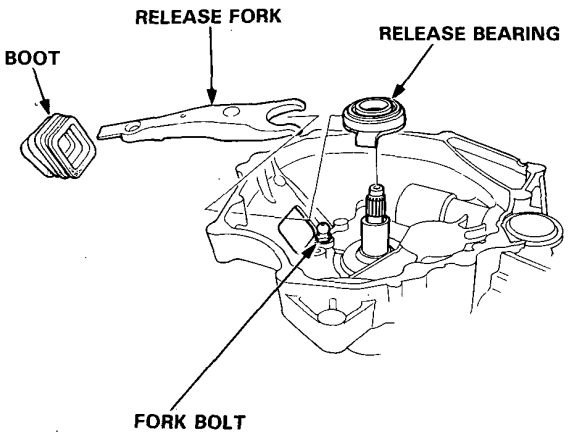

2. To remove the boot, first remove the damper from the release fork.

Inspection

1. Check the release bearing for play by spinning it by hand.

   CAUTION: The bearing is packed with grease. Do not wash it in solvent.

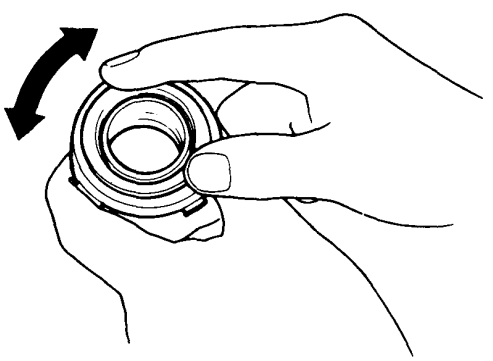

2. Replace the bearing with a new one if there is excessive play.

Installation

1. Slide the release fork between the release bearing pawls, and install the set clip on the fork bolt.

   CAUTION: Use only molybdenum disulfide grease in this step.

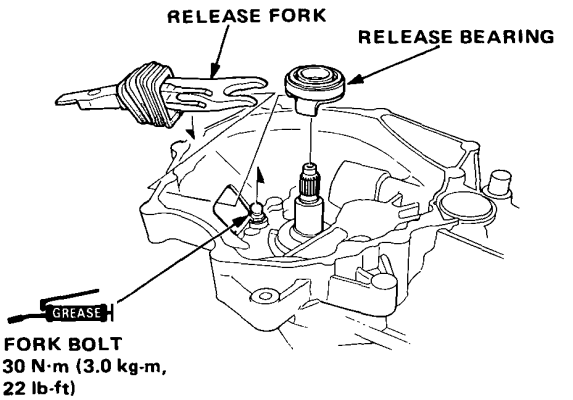

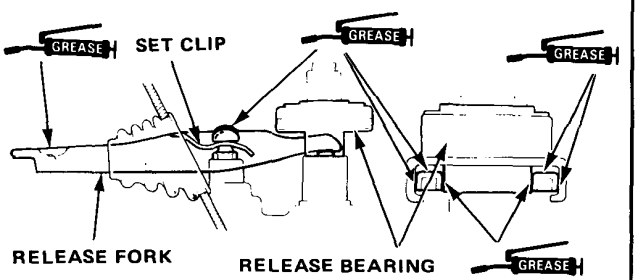

2. Install the boot, being sure that there is no clearance: release fork-to-boot, and boot-to-clutch case.
3. Move the release fork right and left to make sure that the fork fits properly against the bearing, and that the bearing slides smoothly.

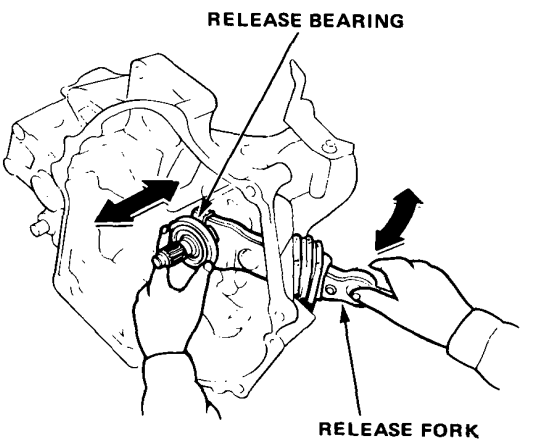

Pressure Plate

Removal/Inspection

1. Inspect the fingers of the diaphragm spring for wear at the release bearing contact area.

2. Check the diaphragm spring fingers for height using the Clutch Disc Alignment Tool and feeler gauge.

Service Limit: 0.8 mm (0.03 in.) Max.

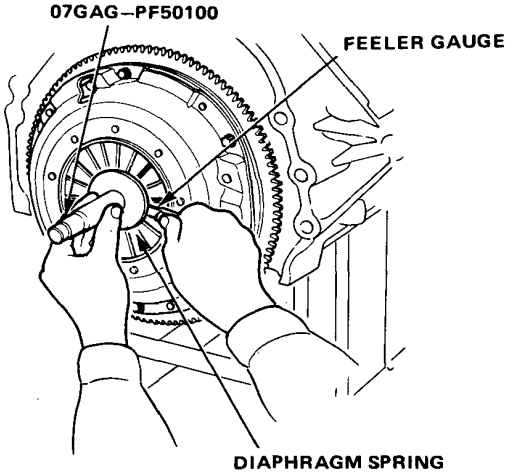

3. Install the Ring Gear Holder.

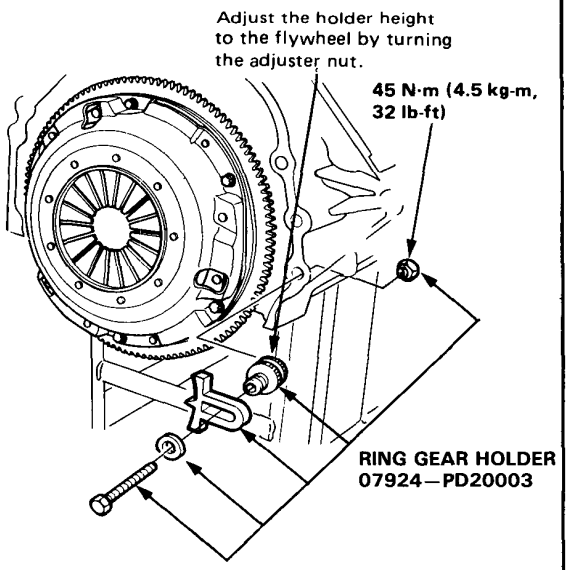

4. To prevent warping, unscrew the pressure plate mounting bolts two turns at a time in a crisscross pattern using a 10 mm T-wrench, then remove the pressure plate and clutch disc.

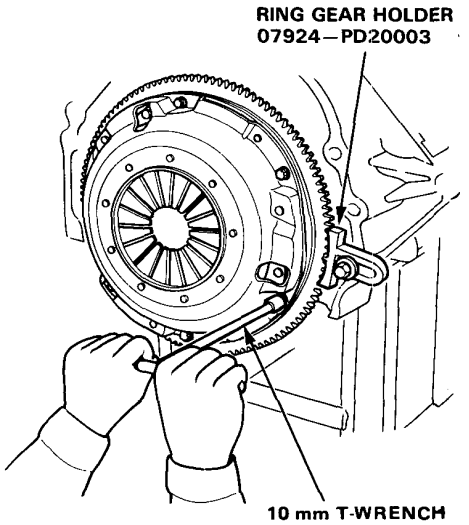

5. Inspect the pressure plate surface for wear, cracks, or burning.

6. Inspect for warpage using a straight edge and feeler gauge.

   Service Limit: 0.15 mm (0.006 in.) Max.

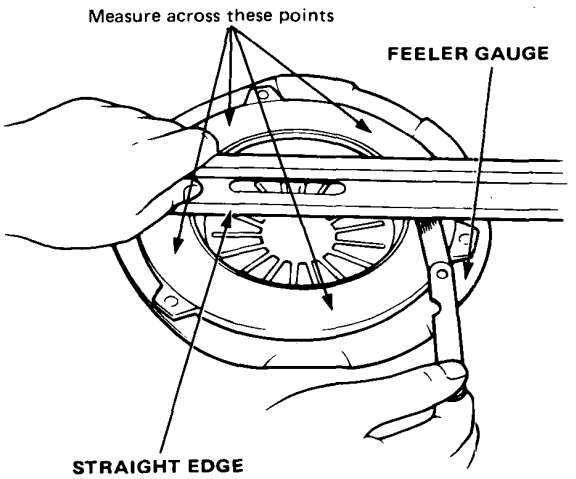

Clutch Disc

Inspection

1. Inspect lining of the clutch disc for signs of slipping or oil. Replace it if it is burned black or oil soaked.

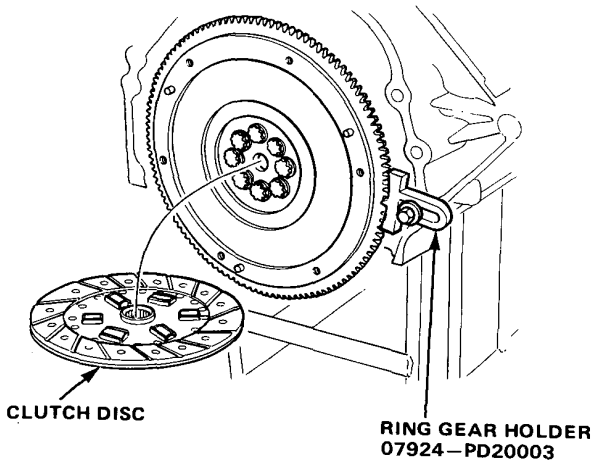

2. Measure the clutch disc thickness.

Clutch Disc Thickness:
Standard (New): 8.5–9.2 mm (0.33–0.36 in.)
Service Limit: 6.1 mm (0.24 in.)

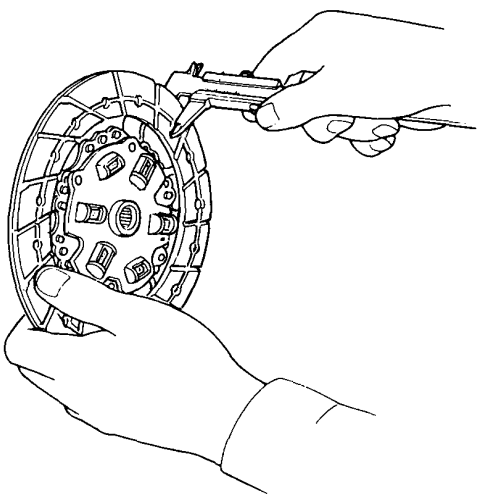

3. Check for loose rubber torsion dampers. Replace the clutch disc if any are loose.

4. Measure the depth from the lining surface to the rivets, on both sides.

Rivet Depth:
Standard (New): 1.3 mm (0.051 in.) min.
Service Limit: 0.2 mm (0.008 in.)

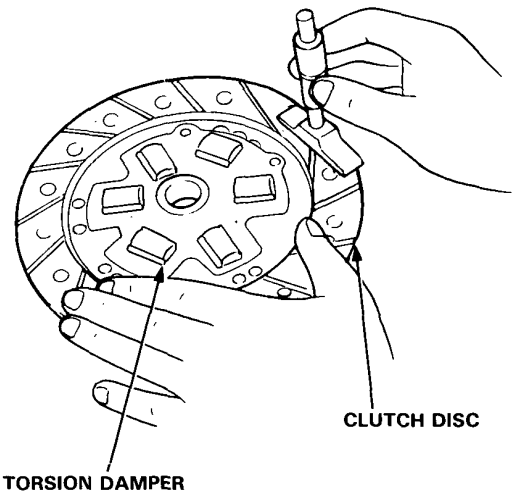

Flywheel

Inspection/Removal

1. Inspect the ring gear teeth for wear or damage.

2. Inspect the clutch disc mating surface on the flywheel for wear, cracks or burning.

3. Measure the flywheel runout using a dial indicator through at least two full turns. Push it against the flywheel each time you turn it to take up the crankshaft thrust washer clearance.

   NOTE: The runout can be measured with engine installed.

   Standard (New): 0.05 mm (0.002 in.) max.
   Service Limit: 0.15 mm (0.006 in.)

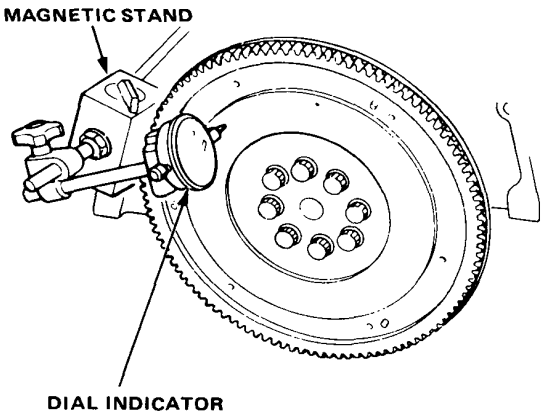

4. Remove the eight flywheel mounting bolts and flywheel.

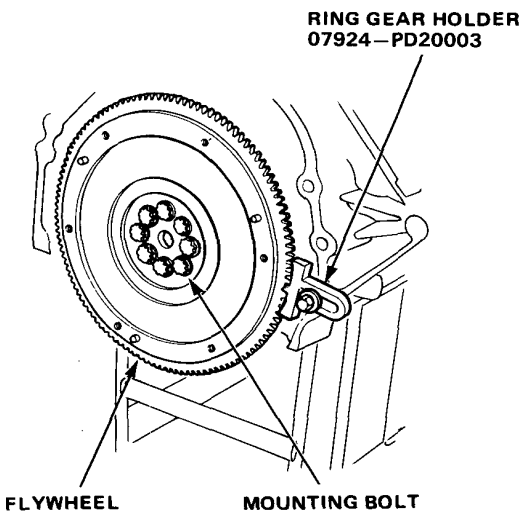

Flywheel and Clutch Disc

Installation

1. Align the hole in flywheel with the crankshaft dowel pin and assemble. Install the bolts only finger tight.

2. Install the Ring Gear Holder, then torque the flywheel bolts in a crisscross pattern, as shown.

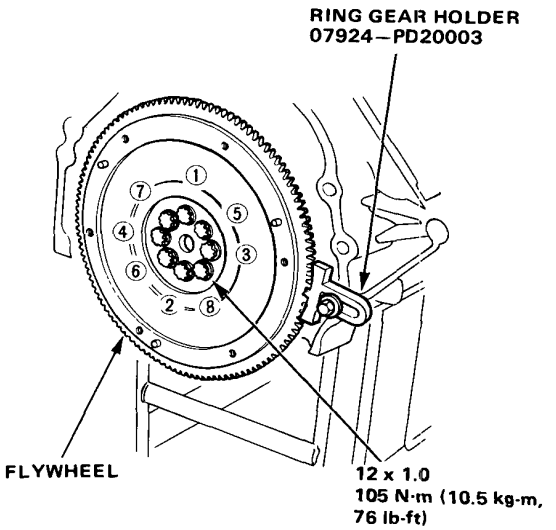

3. Install the clutch disc and pressure plate by aligning the flywheel dowels with dowel holes in the pressure plate.

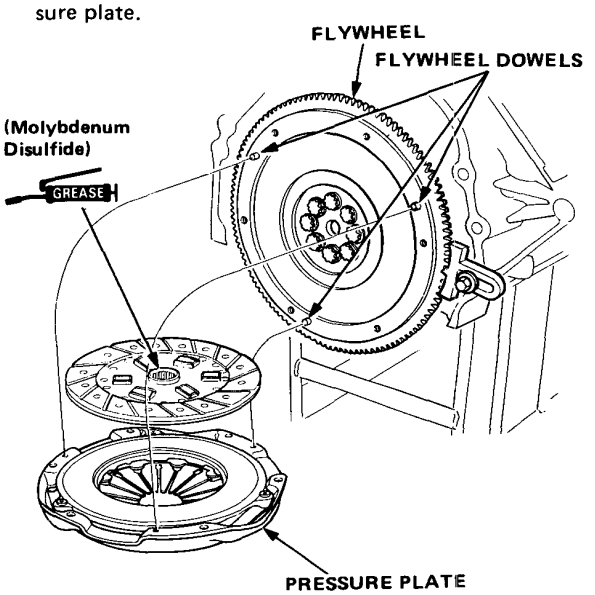

4. Install the attaching bolts finger tight.

5. Insert the Clutch Disc Alignment Tool in the splined hole in the clutch disc.

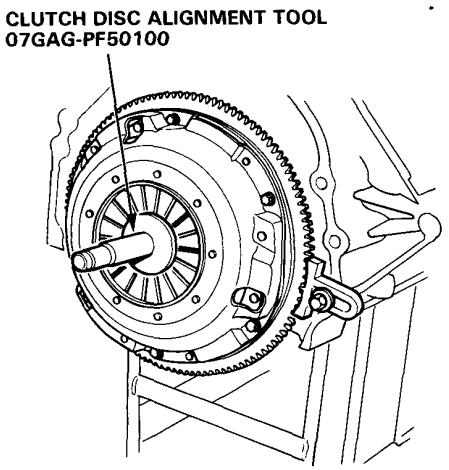

6. Torque the bolts in a crisscross pattern as shown. Tighten them two turns at a time to prevent warping the diaphragm spring.

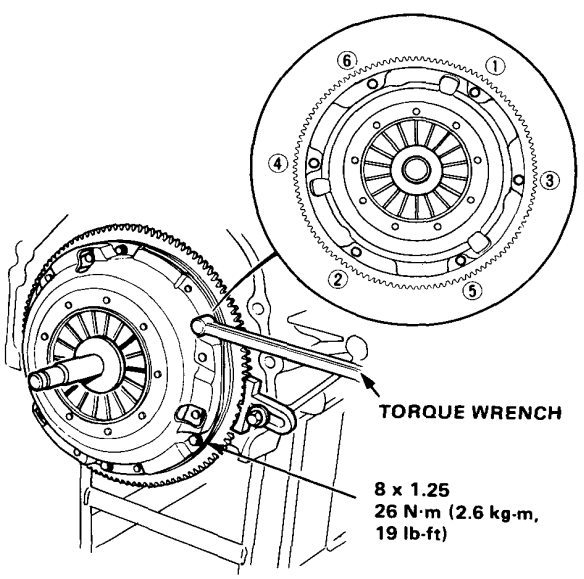

7. Remove the Alignment Tool and Ring Gear Holder.

Manual Transmission

* The manual transmission of E-KA3, on which C27 engine installed, is revised to G3 type.
This section covers the revisions from the C3 type engine. For the service procedures of the G3 type, refer to the existing SHOP MANUAL for C3 TYPE MANUAL TRANSMISSION (P/N 62PG200), since its construction is basically the same as of G3 type.

Maintenance **8-2**
Transmission Housing **8-3**
Mainshaft Thrust Shim **8-4**
Gearshift Mechanism **8-7**
Transmission **8-8**

Items of revision

- Neutral switch installation/removal covered.
- Due to revision of the mainshaft spring washer, adjustment of mainshaft thrust shim covered.

Special Tool

Ref. No.	Tool Number	Description	Q'ty	Remarks
①	07979–PJ40000	Magnet Stand Base	1	
②	07GAJ–PG20101	Mainshaft Clearance Inspection Tool	1	

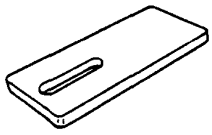

①

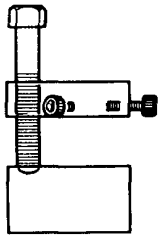

②

Oil Level Inspection

1. Check with oil at operating temperature, engine OFF, and car on level ground.
2. Remove oil filler plug and check level with finger.
3. Oil level must be up to fill hole. If it is below hole, add oil until it runs out, then reinstall plug.

Oil Change

Change oil every 48,000 km (30,000 miles).
Use only 10W-30 or 10W-40 weight oil rated SF grade.

1. With transmission oil at operating temperature, engine OFF, and car on level ground, remove drain plug and drain transmission.

2. Reinstall drain plug with new washer, and refill to proper level.

   NOTE: Drain plug washer should be replaced at every oil change.

Oil Capacity

2.2 ℓ (2.3 U.S. qt.) after drain.
2.3 ℓ (2.4 U.S. qt.) after overhaul.

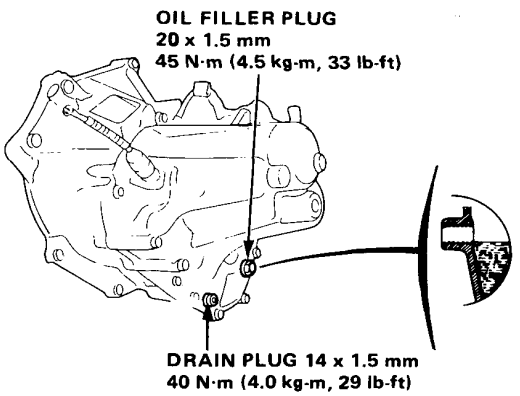

Removal/Installation

NOTE: Place two 70 x 70 x 450 mm (2.75 x 2.75 x 17.75 in) wood blocks under the clutch housing.

Removal

1. Removal the back-up light switch.
2. Remove the neutral switch.
3. Remove the ball spring setting screw, sealing washer, spring and detent ball.

Installation

1. Install the detent ball, spring, sealing washer and ball spring setting screw.
2. Install the neutral switch.
3. Install the back-up light switch.

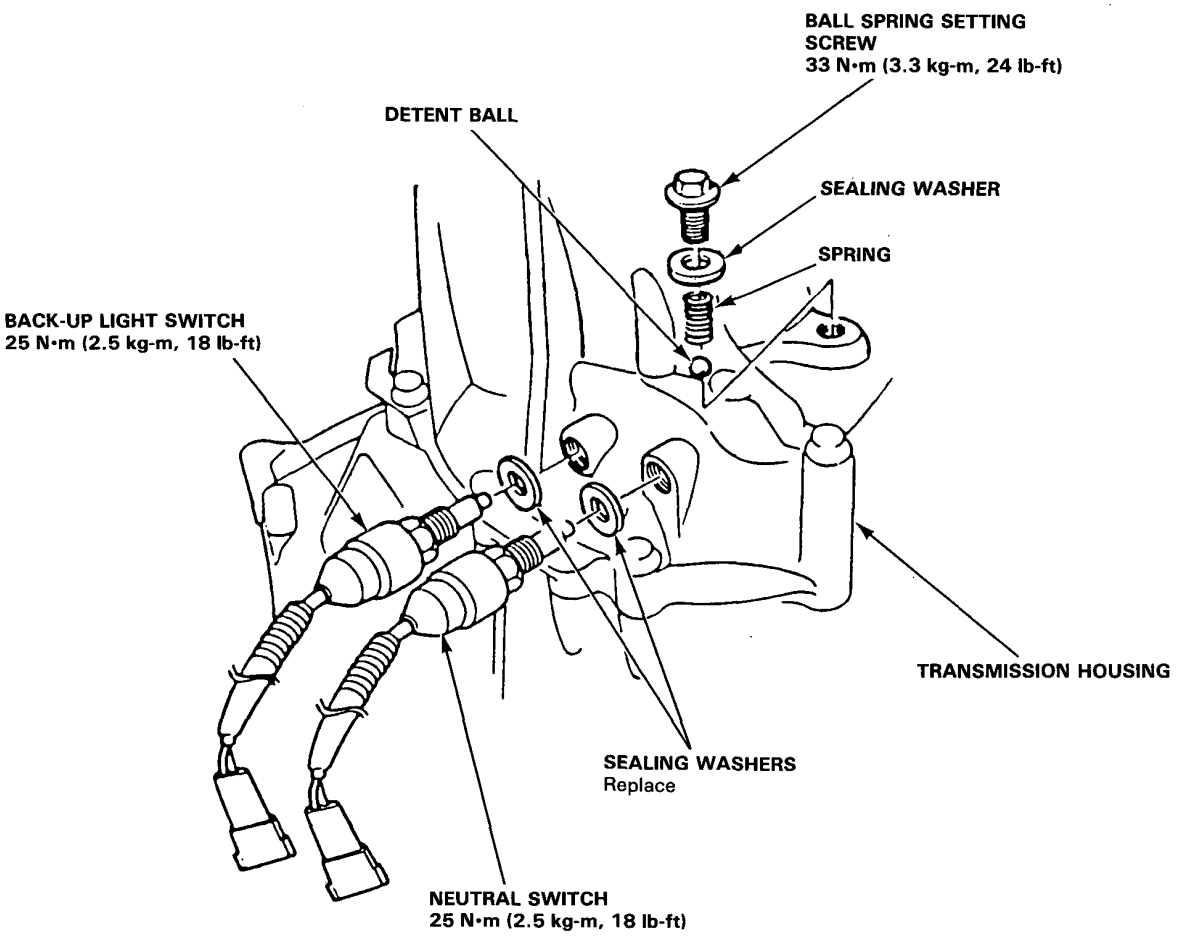

Mainshaft Thrust Shim

Adjustment

1. Remove the thrust shims and oil guide plate from the transmission housing.

2. Install the 3–4 synchro hub, spacer collar, 5th synchro hub, and transmission-side ball bearing on the mainshaft; install the assembly in the transmission housing.

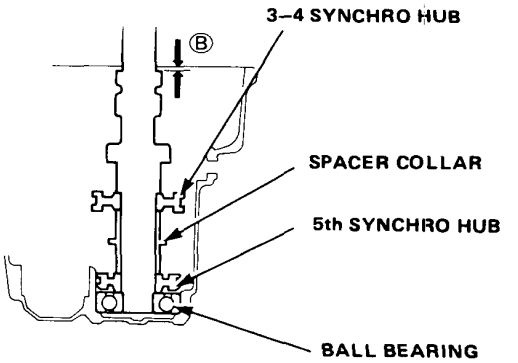

3. Measure the distance B between the end of the transmission housing and mainshaft.

   NOTE:
   - Use a straight edge and feeler gauge.
   - Measure at three locations and average the readings.

4. Remove the spring washer from the mainshaft.

5. Measure the distance C between the surfaces of the clutch housing and bearing inner race.

   NOTE:
   - Use a straight edge and feeler gauge.
   - Measure at three locations and average the readings.

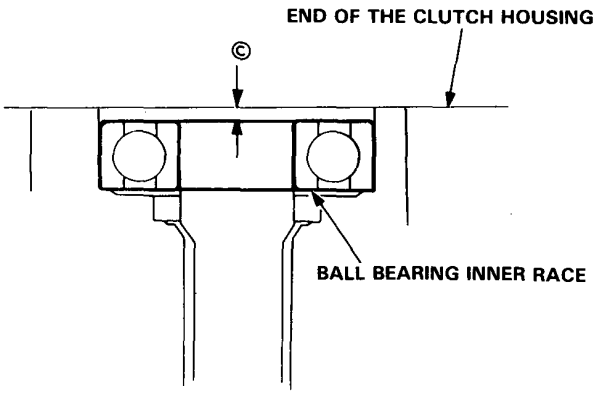

6. Select the proper shim (or shim pair) from the formula and chart in the next column.

   NOTE: Do not use more than two shims.

Shim Selection Formula:

From the measurements you made in steps 3 and 5:

1. Subtract distance C (step 5) from distance B (step 3).

2. From this number, subtract 0.97 (which is midpoint the flex range of the clutch housing spring washer).

3. Take this number and compare it to the available shim sizes in the chart. Select one shim or at most two shims that come closest to this number.

   For example:

   B: 2.57
   + C: 0.22
   = 2.79

   2.79
   − 0.97
   = 1.82

   - Since no single shim is that thick, select a combination of two shims.
   - Since the shims come in steps of 0.05 mm, select the closest combination (1.80 mm).
   - Try the 0.85 and the 0.95 mm shims.

P/N	THICKNESS
23931–PG1–771	0.50 mm (0.020 in.)
23932–PG1–771	0.55 mm (0.022 in.)
23933–PG1–771	0.60 mm (0.024 in.)
23934–PG1–771	0.65 mm (0.026 in.)
23935–PG1–771	0.70 mm (0.028 in.)
23936–PG1–771	0.75 mm (0.030 in.)
23937–PG1–771	0.80 mm (0.031 in.)
23938–PG1–771	0.85 mm (0.033 in.)
23939–PG1–771	0.90 mm (0.035 in.)
23940–PG1–771	0.95 mm (0.037 in.)
23941–PG1–771	1.00 mm (0.039 in.)
23942–PG1–771	1.05 mm (0.041 in.)
23943–PG1–771	1.10 mm (0.043 in.)
23944–PG1–771	1.15 mm (0.045 in.)

(cont'd)

Adjustment (cont'd)

7. Check the thrust clearance in the manner described below.

   –1. Install the shims selected in the transmission housing.

   –2. Install the spring washer in the mainshaft.

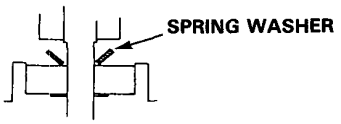

NOTE:
- Clean the spring and shim throughly before installation.
- Install the spring and shim properly.

   –3. Install the mainshaft in the clutch housing.

   –4. Place the transmission housing over the mainshaft and onto the clutch housing.

   –5. Tighten the clutch and transmission housings with several 10 mm bolts.

   –6. Tap the mainshaft with a plastic hammer.

   –7. Attach the collar and shaft holder of the special tool (Mainshaft Thrust Clearance Inspection Tool) to the mainshaft and tighten the three bolts.

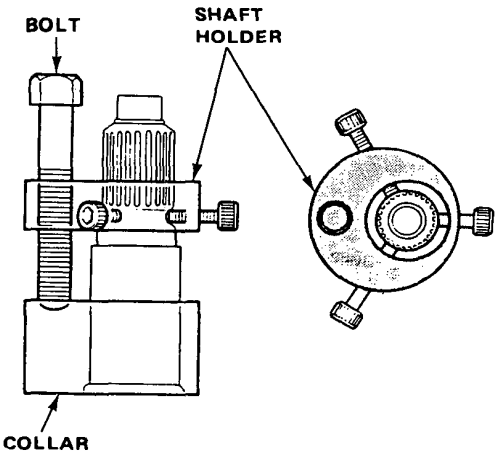

CAUTION: Screw the three bolts into the groove below the splines. Never screw into the splined area.

   –8. Attach the special tool (magnet stand base) to the clutch housing and set the dial gauge on the top of the mainshaft.

   –9. Turn the bolt clockwise and measure the clearance.

CAUTION:
- **Do not turn the bolt more than 60 degrees after the needle of the gauge stops moving. Be careful not to over tighten.**
- **Measurement should be made at room temperature.**

   –10. Clearance is correct if the reading is between 0.14–0.21 mm (0.0055–0.0083 in.).
   If not, re-check necessary shim thickness.

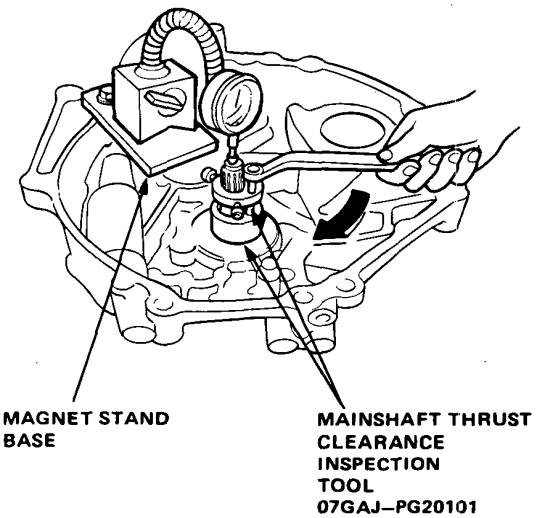

Gearshift Mechanism

Overhaul

NOTE: Inspect rubber parts for wear or damage when disassembling.

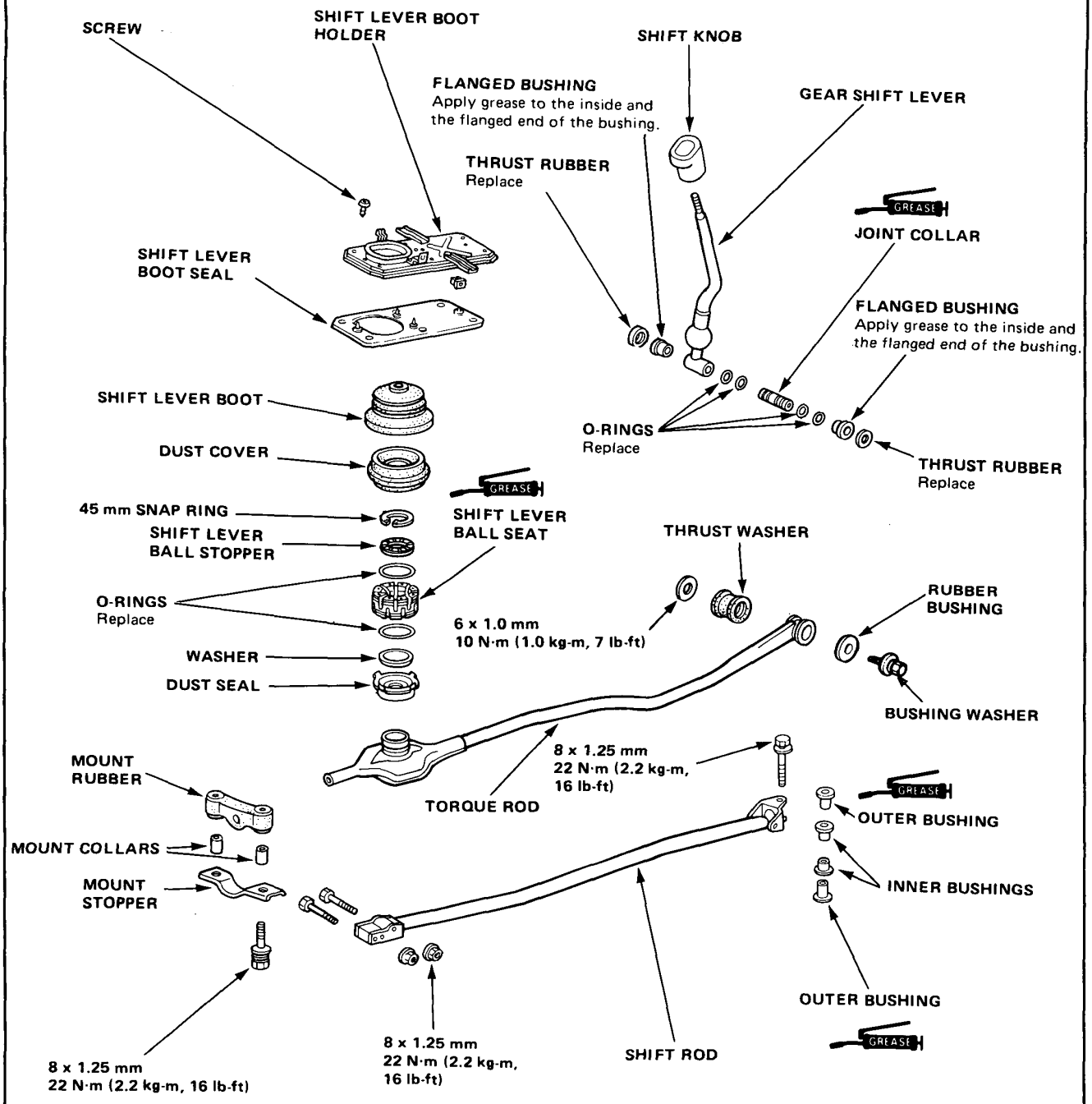

Removal

1. Disconnect the battery positive (+) and negative (−) cables from the battery.
2. Disconnect the starter and ground cables.
3. Disconnect the backup light switch wires from the engine.
4. Loosen the 6 x 1.0 mm bolt attaching the harness holder at the side of the transmission hanger, and release harness from the transmission.
5. Loosen the 6 x 1.0 mm bolts at the side of the battery base, and intake hose band.
6. Remove the air cleaner case complete with the air intake hose (see section 7).
7. Remove the 8 x 1.25 mm bolts and the clutch slave cylinder with the clutch pipe and push rod.
8. Remove the 8 x 1.25 mm bolts and clutch damper assy from transmission hanger bracket.
   NOTE: Do not operate the clutch pedal once the slave cylinder has been removed.

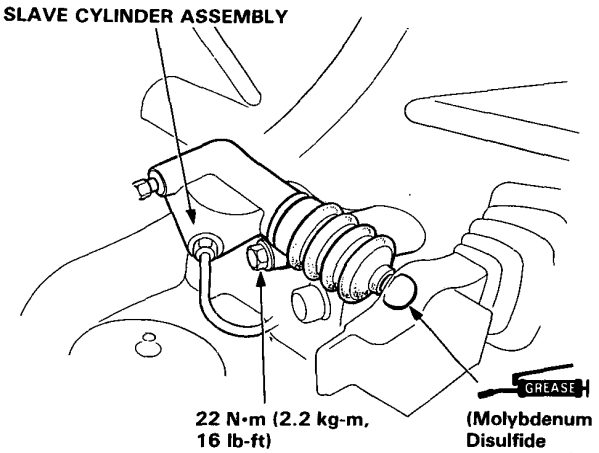

9. Remove the power steering speed sensor with the sensor hose intact.
10. Drain the transmission oil.
11. Remove the axles (see Section 10).
12. Remove the intermediate shaft by removing the 4 bolts.

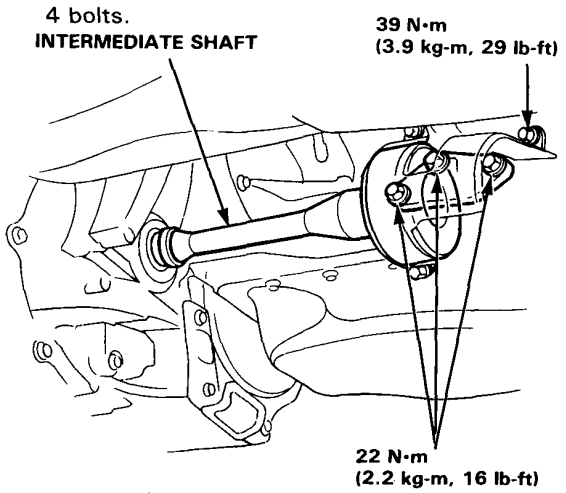

13. Remove the shift rod and shift extension.
14. Remove the 2 bolts attaching the torque rod bracket to the clutch case.

    NOTE: Replace the bolts with new ones whenever loosened or removed.

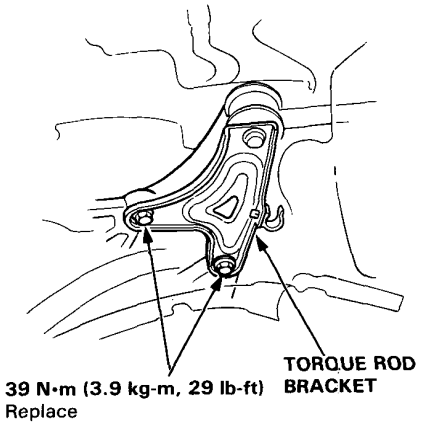

15. Place transmission jack securely beneath transmission.
16. Remove the sub frame center beam.
17. Attach the engine hanger set plates to the engine with two 10 x 1.25 mm bolts, one on each bank.
18. Make sure the hoist chain is tight.

    NOTE: Use bolts long enough to hold the set plate on the engine, and tighten securely.

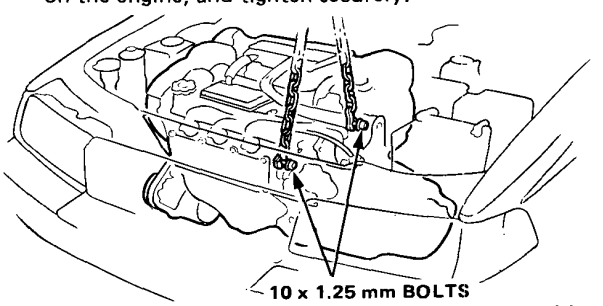

NOTE: Be sure the hoist does not interfere with distributor high tension wires.

19. Remove the center stopper bracket from the transmission.
20. Remove the clutch cover.

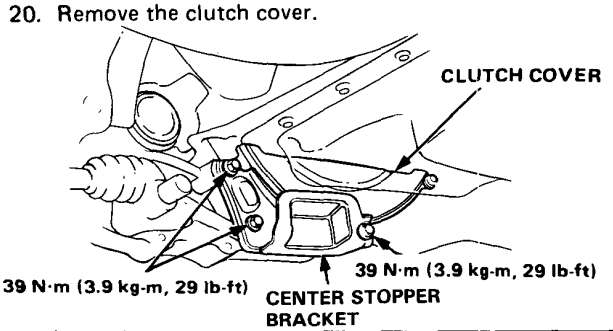

21. Remove the two rear engine mounting bolts from the transmission.

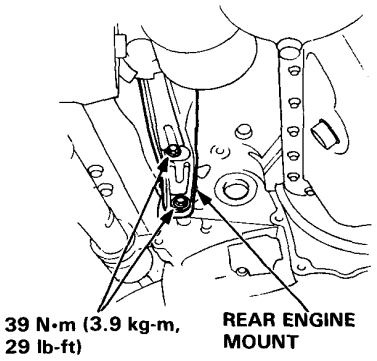

22. Remove the two front engine mounting bolts from the transmission housing.

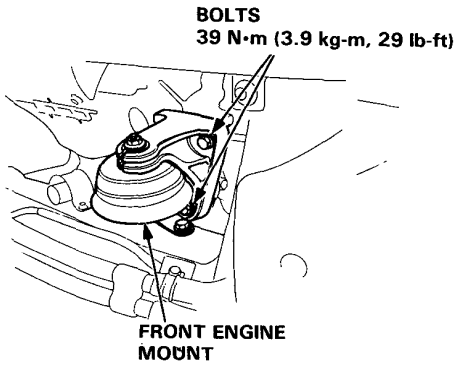

23. Remove the starter mounting bolts and starter.
24. Remove the rest of the transmission mounting bolts.

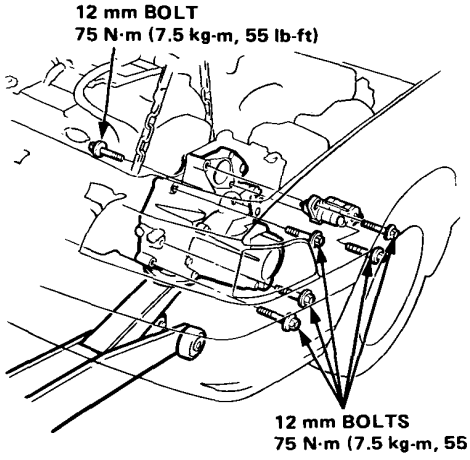

25. Pull the transmission away from the engine to clear the two 14 mm dowel pins, and lower on the transmission jack.

Installation

1. Place the transmission on transmission jack.

   NOTE: Clean and grease release bearing sliding surfaces.

2. Check that the two dowel pins are installed in the clutch housing.

3. Raise the transmission far enough to align dowel pins with matching holes in the block.

4. Roll the transmission toward the engine and fit the mainshaft into the clutch disc splines.

5. Install the transmission mount bolts and torque to 75 N·m (7.5 kg-m, 55 lb-ft).

6. Install the starter mount bolts and tighten to the specified torque.

7. Install the front engine mount bolts and torque to 39 N·m (3.9 kg-m, 29 lb-ft).

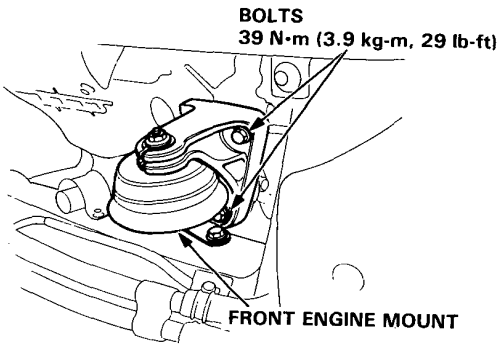

8. Install the rear engine mount bolts and tighten to 39 N·m (3.9 kg-m, 29 lb-ft) torque.

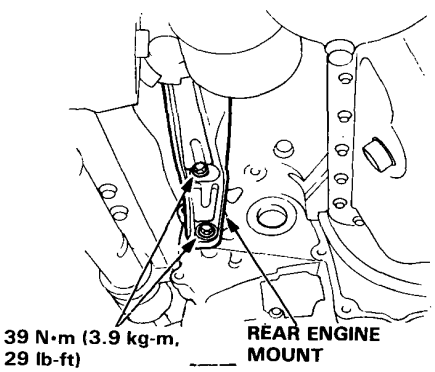

9. Install the center stopper bracket bolts and tighten to 39 N·m (3.9 kg-m, 29 lb-ft).

10. Install the clutch cover.

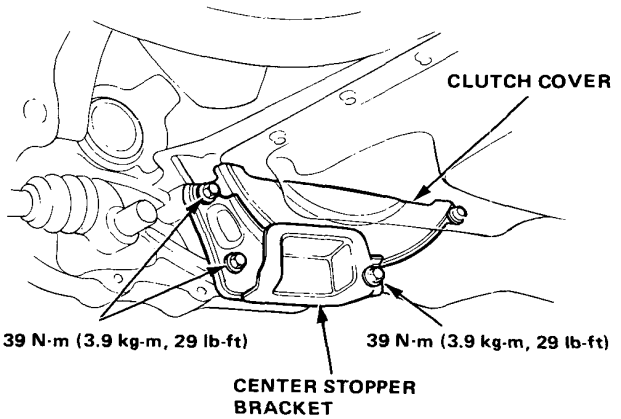

11. Install the center beam.

12. Remove the transmission jack.

13. Install and tighten the new torque rod bracket bolts to 39 N·m (3.9 kg-m, 29 lb-ft).

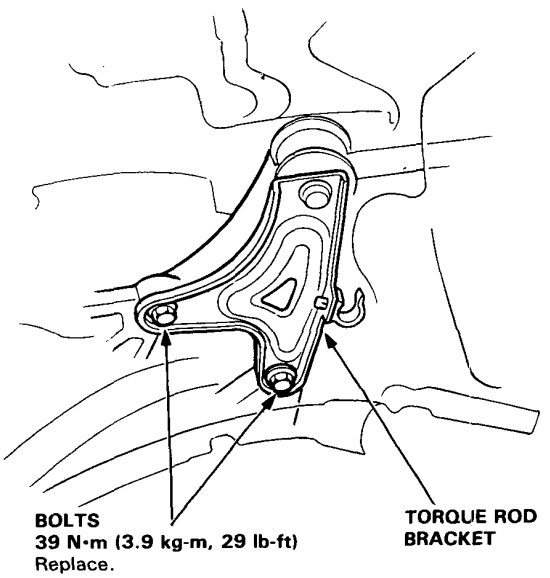

NOTE: Replace the bolts with new ones whenever loosened removed.

14. Remove the chain hoist by removing the two 10 mm bolts.

15. Install the shift rod and shift extension.

16. Install the intermediate shaft with the three 8 x 1.25 mm bolts and a 10 x 1.25 mm bolt. Tighten 8 mm bolts to 22 N•m (2.2 kg-m, 16 lb-ft) and 10 mm bolt to 39 N•m (3.9 kg-m, 29 lb-ft).

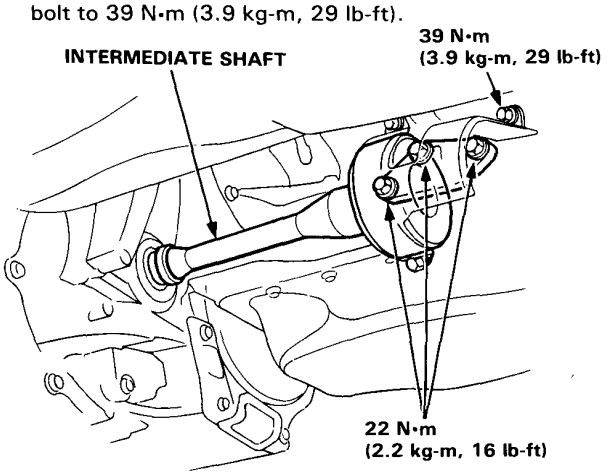

17. Install the right and left axles.

18. Install the speed sensor.

19. Install the clutch slave cylinder with the two 8 x 1.25 mm bolts complete with the pipe and push rod. Torque the bolts to 22 N•m (2.2 kg-m, 16 lb-ft).

20. Install the clutch damper assembly and 8 x 1.25 mm bolts to transmission hanger bracket. Torque the bolts to 22 N•m (2.2 kg-m, 16 lb-ft).

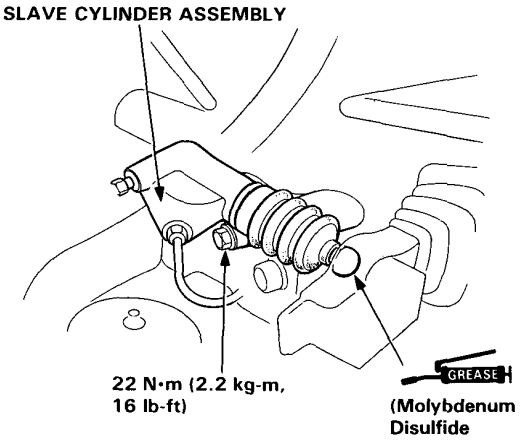

21. Install the air cleaner case and intake hose.

22. Install and tighten the two 6 x 1.0 mm bolts at side of the battery case, and tighten the intake hose band.

23. Tighten the 6 x 1.0 mm harness holder bolt at the side of the transmission hanger.

24. Connect the backup light switch wire to the engine.

25. Connect the starter and ground cables.

26. Connect the battery positive (+) and negative (−) cables to the battery.

27. Refill the transmission and adjust clutch free play.

28. Check the transmission for smooth operation.

Automatic Transmission

Component Locations 9-2
Circuit Diagram 9-4
Troubleshooting Procedures 9-6
Symptom-to-Component Chart
  Electrical System 9-7
Electrical Troubleshooting 9-8
A/T Speed Pulser 9-25
Lock-up Control Solenoid Valve A/B 9-26
Shift Control Solenoid Valve A/B 9-27
S_4 Switch 9-28
Symptom-to-Component Chart 9-30
Road Test 9-32
Pressure 9-34
Stall Speed 9-37
Fluid Level 9-38
Shift Indicator Light 9-39
Shift Indicator Panel 9-39
Gearshift Selector 9-40
Shift Cable 9-41
Throttle Control Cable 9-42
Transmission 9-43

Special Tool

Ref. No	Tool Number	Description	Q'ty	Remarks
①	07406–0020003	Oil Pressure Gauge Set	1	
①-1	07406–0020201	Oil Pressure Gauge hose	1	Component Tool

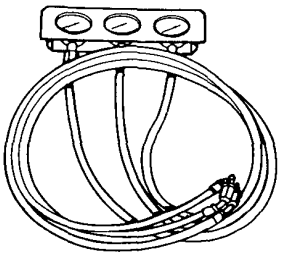

①

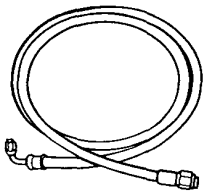

①-1

Component Locations

LHD:

COOLING FAN CONTROL UNIT
See Section 16

S4 SWITCH
Troubleshooting, page 9-9
Test, page 9-28

BRAKE LIGHT SWITCH
Troubleshooting page 9-10
Test, See Section 16

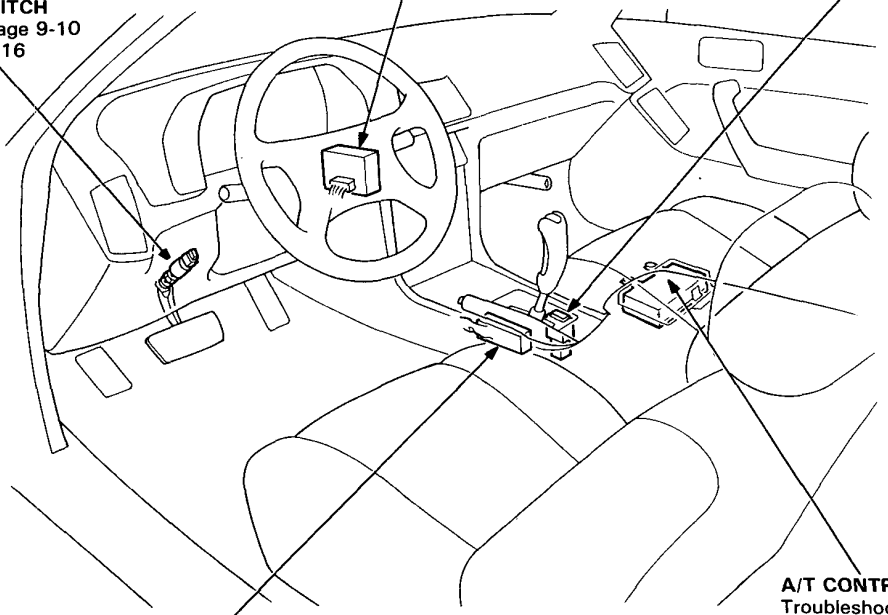

A/T CONTROL UNIT
Troubleshooting, page 9-6

SHIFT POSITION CONSOLE SWITCH
Troubleshooting, pages 9-15, 17
Test, See Section 16
Replacement, See Section 16

THROTTLE ANGLE SENSOR
Troubleshooting, page 9-13

LOCK-UP CONTROL SOLENOID VALVE ASSEMBLY
Troubleshooting, pages 9-11, 12
Test, page 9-26
Replacement, page 9-26

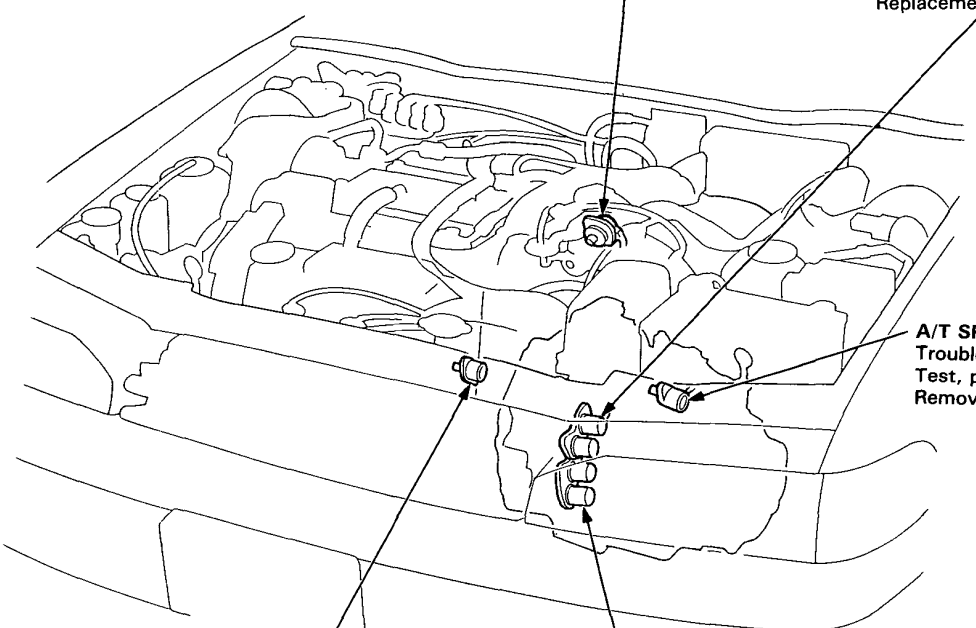

A/T SPEED PULSER
Troubleshooting, page 9-21
Test, page 9-25
Removal/Inspection, page 9-25

COOLANT TEMPERATURE SENSOR
Troubleshooting, page 9-22

SHIFT CONTROL SOLENOID VALVE ASSEMBLY
Troubleshooting, pages 9-19, 20
Test, page 9-27
Replacement, page 9-27

RHD:

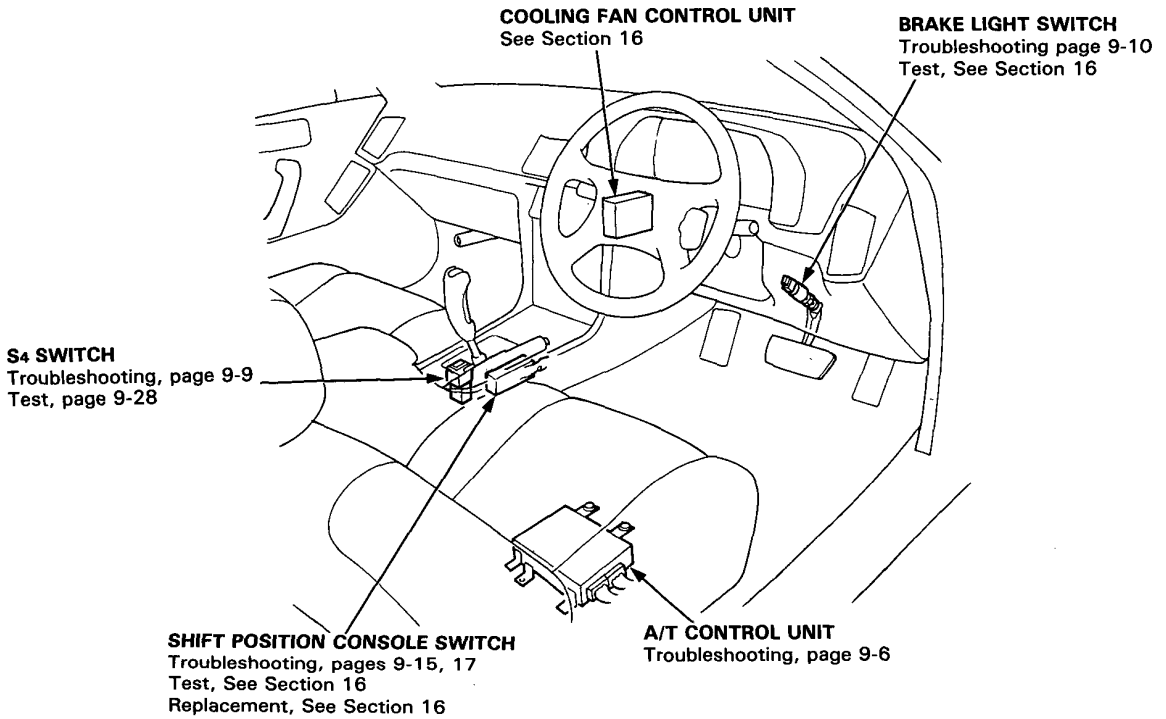
COOLING FAN CONTROL UNIT
See Section 16
BRAKE LIGHT SWITCH
Troubleshooting page 9-10
Test, See Section 16
S4 SWITCH
Troubleshooting, page 9-9
Test, page 9-28
SHIFT POSITION CONSOLE SWITCH
Troubleshooting, pages 9-15, 17
Test, See Section 16
Replacement, See Section 16
A/T CONTROL UNIT
Troubleshooting, page 9-6

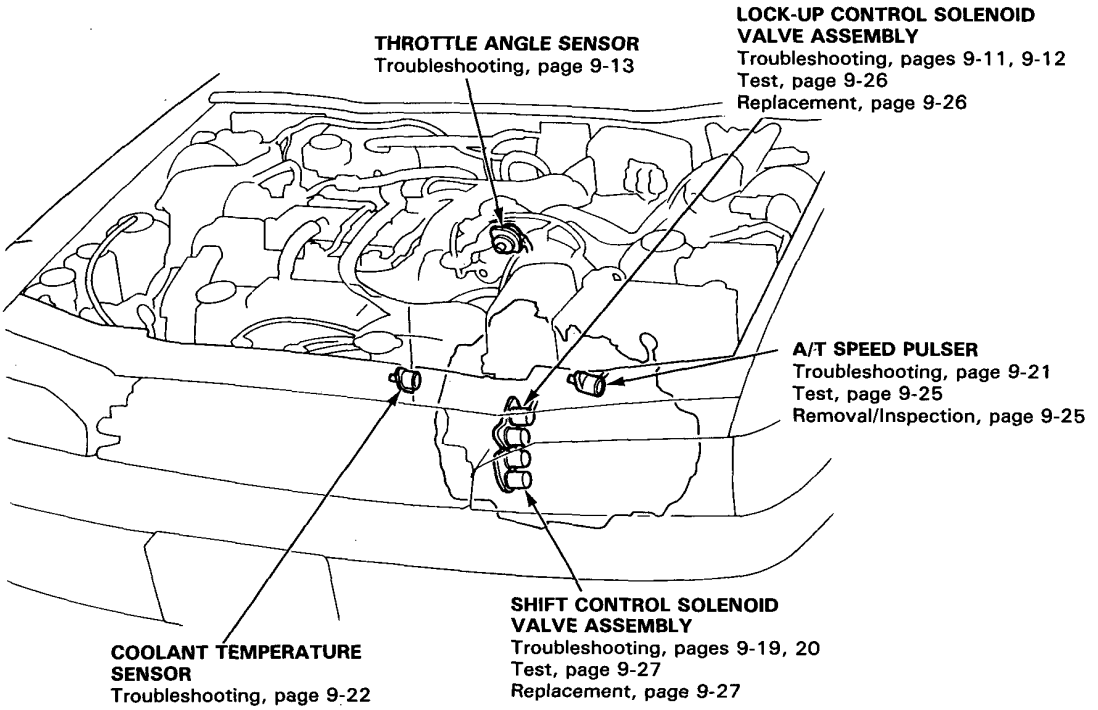
THROTTLE ANGLE SENSOR
Troubleshooting, page 9-13
LOCK-UP CONTROL SOLENOID VALVE ASSEMBLY
Troubleshooting, pages 9-11, 9-12
Test, page 9-26
Replacement, page 9-26
A/T SPEED PULSER
Troubleshooting, page 9-21
Test, page 9-25
Removal/Inspection, page 9-25
SHIFT CONTROL SOLENOID VALVE ASSEMBLY
Troubleshooting, pages 9-19, 20
Test, page 9-27
Replacement, page 9-27
COOLANT TEMPERATURE SENSOR
Troubleshooting, page 9-22

Circuit Diagram

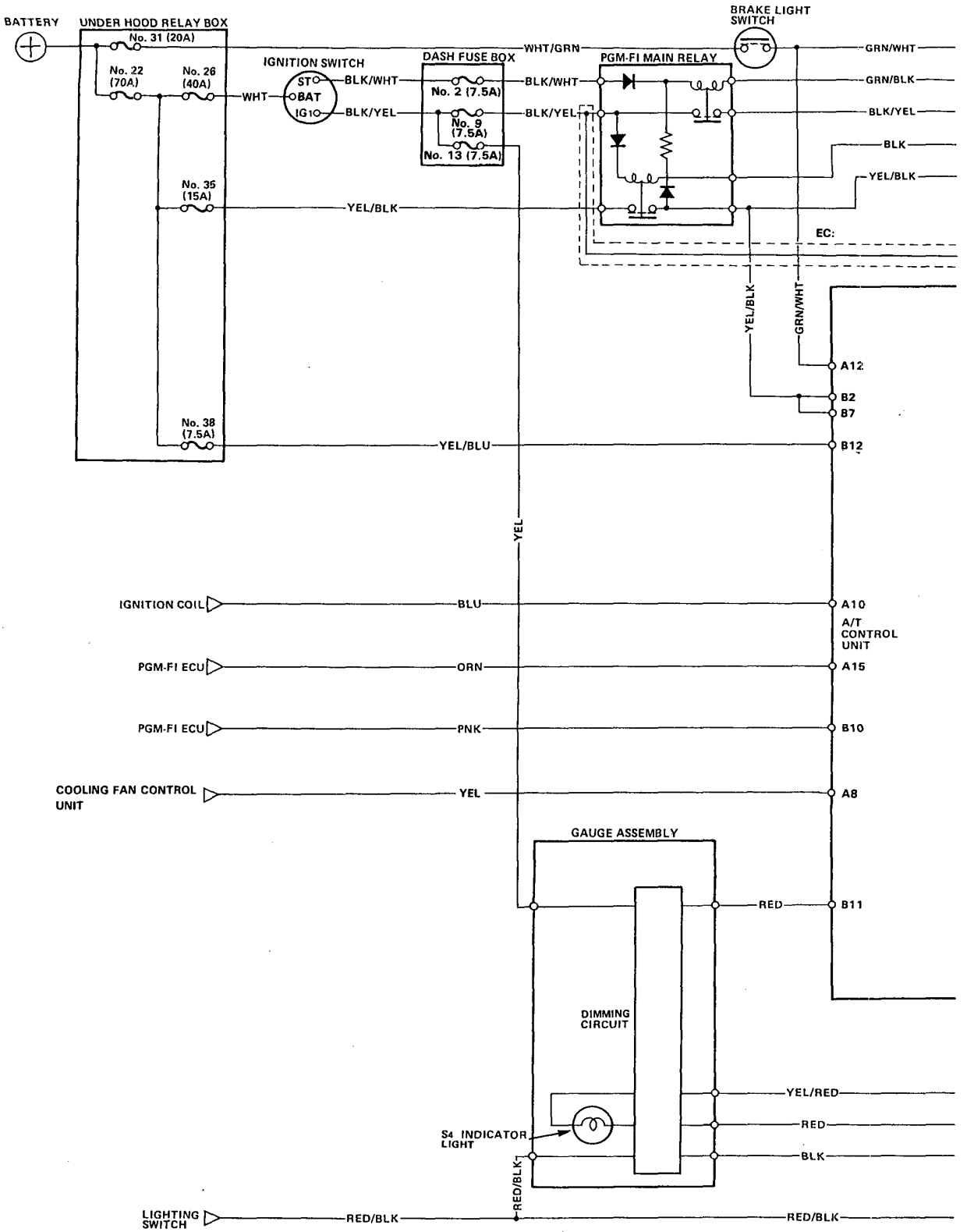

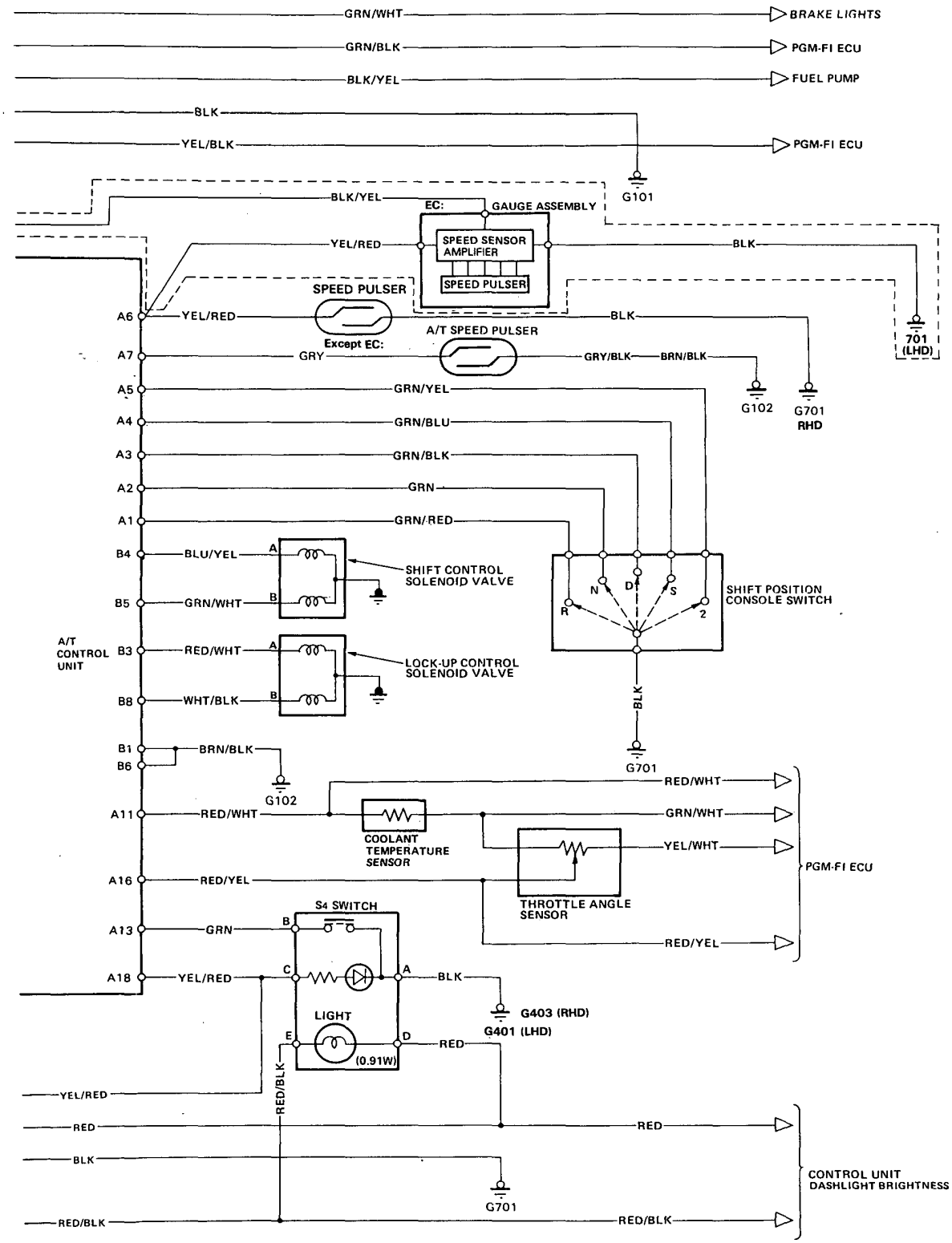
GRN/WHT
BRAKE LIGHTS
GRN/BLK
PGM-FI ECU
BLK/YEL
FUEL PUMP
BLK
YEL/BLK
PGM-FI ECU
G101
BLK/YEL
EC:
GAUGE ASSEMBLY
YEL/RED
SPEED SENSOR AMPLIFIER
SPEED PULSER
BLK
SPEED PULSER
A6
YEL/RED
BLK
A/T SPEED PULSER
Except EC:
A7
GRY
GRY/BLK
BRN/BLK
701 (LHD)
A5
GRN/YEL
G102
G701 RHD
A4
GRN/BLU
A3
GRN/BLK
A2
GRN
A1
GRN/RED
B4
BLU/YEL
A
SHIFT CONTROL SOLENOID VALVE
B5
GRN/WHT
B
N
D
S
R
2
SHIFT POSITION CONSOLE SWITCH
A/T CONTROL UNIT
B3
RED/WHT
A
LOCK-UP CONTROL SOLENOID VALVE
B8
WHT/BLK
B
BLK
G701
B1
B6
BRN/BLK
G102
RED/WHT
A11
RED/WHT
COOLANT TEMPERATURE SENSOR
GRN/WHT
YEL/WHT
PGM-FI ECU
A16
RED/YEL
THROTTLE ANGLE SENSOR
S4 SWITCH
A13
GRN
B
RED/YEL
A18
YEL/RED
C
A
BLK
G403 (RHD)
G401 (LHD)
LIGHT
E
D
RED
(0.91W)
RED/BLK
YEL/RED
RED
RED
BLK
G701
CONTROL UNIT DASHLIGHT BRIGHTNESS
RED/BLK
RED/BLK

Troubleshooting Procedures

The A/T Control Unit has a built-in self-diagnosis function. The S_4 indicator light in the gauge assembly and LED display on the A/T control unit blink when the A/T control unit senses an abnormality in the input or output systems. The number of blinks from the LED display varies according to the problem, which can be diagnosed by counting the number of blinks.

For problem diagnosis count the number of blinks from the LED display as shown on the Symptom-to-Component Chart on page 9-15. If no abnormality is found from your inspection, refer to the hydraulic system Symptom-to-Component Chart on page 9-30.

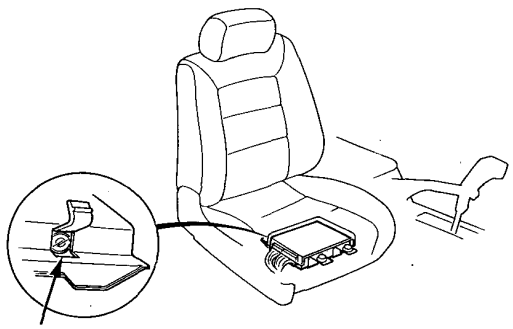

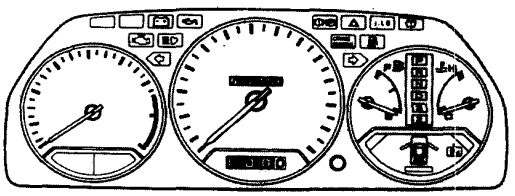

When the ignition switch is turned ON, the S_4 indicator light comes on for about two seconds regardless of whether there is a problem. The S_4 indicator light will also come on when in S_4 mode.

If there is a system problem, the S_4 indicator light will corne on and continue to blink until the ignition key is turned OFF. When the ignition key is turned ON again, the S_4 indicator light will not blink again for the original problem. But if the A/T control unit senses the original abnormality again with ignition switch ON, the S_4 indicator light will blink again for the original problem. Therefore, even though the S_4 indicator light does not come on when turning the ignition key ON, check the LED display for automatic transmission problem diagnosis.

Since the LED problem code is retained in memory, it will blink again whenever the ignition key is turned on. If the LED problem code is not memorized, check the following causes:

- Check the Alternator Sense fuse (7.5A) in the under-hood relay box.
- Check for an open circuit in the YEL/BLU wire between the Alternator Sense fuse (7.5A) and A/T control unit B12 terminal.

After making repair, disconnect the Alternator Sense fuse (7.5A) in the under-hood relay box for more than ten seconds to reset LED display memory.

Symptom-to-Component Chart

Electrical System

Number of LED display blinks	S4 indicator light	Symptom	Probable Cause	Ref. page
0	OFF	• S4 indicator light does not come on with the ignition switch ON (S4 indicator light should come on for about 2 sec.). • Fails to shift (stuck in 4th gear).	• Loosely or poorly connected power line to control unit or disconnected control unit ground wire • Open or short in S4 indicator light wire • Blown S4 indicator light bulb	9-8
		• S4 won't engage.	• Open or short in S4 switch wire • Faulty S4 switch	9-9
		• Fails to shift from 2nd to 1st gear when releasing brake pedal with shift lever in [S] or [D] range.	• Open or short in brake light switch wire	9-10
1	Blinks	• Lock-up clutch does not engage. • Lock-up clutch does not disengage. • Frequent engine stalling.	• Disconnected lock-up control solenoid valve A connector • Open or short in lock-up control solenoid valve A wire • Faulty lock-up control solenoid valve A	9-11
2	Blinks	• Lock-up clutch does not engage.	• Disconnected lock-up control solenoid valve B connector • Open or short in lock-up control solenoid valve B wire • Faulty lock-up control solenoid valve B	9-12
3	Blinks or OFF	• Lock-up clutch does not engage.	• Disconnected throttle angle sensor connector • Open or short in throttle angle sensor wire • Faulty throttle angle sensor	9-13
4	Blinks	• Lock-up clutch does not engage.	• Disconnected speed pulser connector • Open or short in speed pulser wire • Faulty speed pulser	9-14
5	Blinks	• Fails to shift other than 2nd ⟷ 4th gear. • Lock-up clutch does not engage.	• Short in shift position console switch wire • Faulty shift position console switch	9-28
6	OFF	• Fails to shift other than 2nd ⟷ 4th gear. • Lock-up clutch does not engage. • Lock-up clutch engages and disengages alternately.	• Disconnected shift position console switch connector • Open in shift position console switch wire • Faulty shift position console switch.	9-17
7	Blinks	• Fails to shift other than 1st ⟷ 4th, 2nd ⟷ 4th, or 2nd ⟷ 3rd gears. • Fails to shift (stuck in 4th gear).	• Disconnected shift control solenoid valve A connector • Open or short in shift control solenoid valve A wire • Faulty shift control solenoid valve A	9-19
8	Blinks	• Fails to shift (stuck in 1st gear or 4th gear).	• Disconnected shift control solenoid valve B connector • Open or short in shift control solenoid valve B wire • Faulty shift control solenoid valve B	9-20
9	Blinks	• Lock-up clutch does not engage.	• Disconnected A/T speed pulser • Open or short in A/T speed pulser wire • Faulty A/T speed pulser	9-21
10	Blinks	• Lock-up clutch does not engage.	• Disconnected coolant temperature sensor connector • Open or short in coolant temperature sensor wire • Faulty coolant temperature sensor	9-22
11	OFF	• Lock-up clutch does not engage.	• Disconnected ignition coil connector • Open or short in ignition coil wire • Faulty ignition coil	9-23
12	OFF	• Lock-up clutch does not disengage.	• Short in cooling fan control unit wire • Faulty cooling fan control unit (See Section 16)	9-24

NOTE:

- If a customer describes the symptoms for codes 3,6 or 11, yet the LED is not blinking, it will be necessary to recreate the symptom by test driving, and then checking the LED with the ignition STILL ON.
- If the LED display blinks 13 or more times, the control unit is faulty.

Troubleshooting Flow Chart

S4 indicator light does not come on with the ignition switch ON. (It should come on for about 2 sec.)

Disconnect the 12 P connector from the control unit.

Check for continuity between the B1 (BRN/BLK) terminal and body ground, and between the B6 (BRN/BLK) terminal and body ground.

Is there continuity?

NO → Repair open in BRN/BLK wire between the B1 terminal and G4 and/or between the B6 terminal and G4.

YES

Turn the ignition switch ON.

Measure voltage between the B2 (YEL/BLK) and B1 (BRN/BLK) terminals, and between the B7 (YEL/BLK) and B1 terminals.

Is there battery voltage?

NO → Repair open or short in YEL/BLK wire between the B2/B7 terminal and the PGM-FI main relay.

YES

Turn the ignition switch OFF.

Connect the 12P connector to the control unit.

Turn the ignition switch ON. Be sure that the battery voltage is available for 2 sec. between the B11 (RED) terminal and B1 (BRN/BLK) terminals.

Is there battery voltage?

YES → Check for open or short in RED wire between the B11 terminal and the gauge assembly. If wire is OK, check the S4 Indicator Light Bulb and the Safety Indicator Circuit.

NO

Check for loose control unit connectors. If necessary, substitute a known good control unit and recheck.

NOTE: View from wire side.

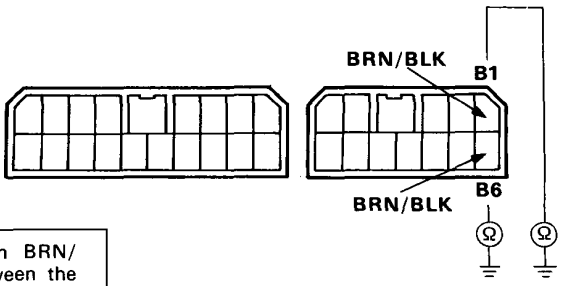

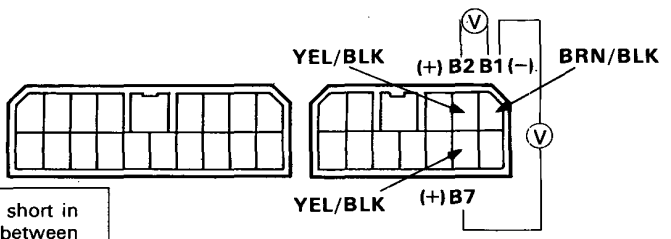

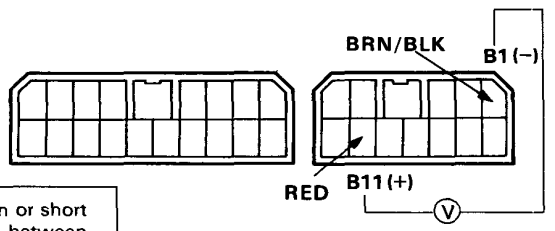

S_4 won't engage.

Disconnect the 18P and 12P connectors from the control unit.

Check for continuity between the A13 (GRN) and B1 (BRN/BLK) terminals.

Is there continuity?

YES → Check for short in GRN wire between the A13 terminal and the S_4 switch. If wire is OK, check the S_4 Switch (page 9-28).

NO

Check for continuity between the A13 (GRN) and B1 (BRN/BLK) terminals while pressing the S_4 switch.

Is there continuity?

NO → Check for open in GRN wire between the A13 terminal and the S_4 switch. If wire is OK, check the S_4 Switch (page 9-28).

YES

Check for loose control unit connectors. If necessary, substitute a known good control unit and recheck.

NOTE: View from wire side.

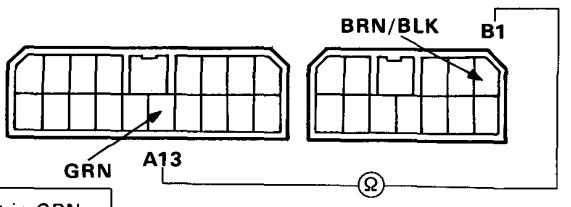

(cont'd)

Troubleshooting Flow Chart (cont'd)

Fails to shift from 2nd to 1st gear when releasing the brake pedal with the shift lever in [S] or [D] range.

Depress the brake pedal and check that the brake lights come on.

Do the lights come on?

NO → Repair the Brake Light Circuit (Section 16).

YES

Disconnect the 18P and 12P connectors from the control unit.

Depress the brake pedal.

Measure the voltage between the A12 (GRN/WHT) and B1 (BRN/BLK) terminals.

NOTE: View from wire side.

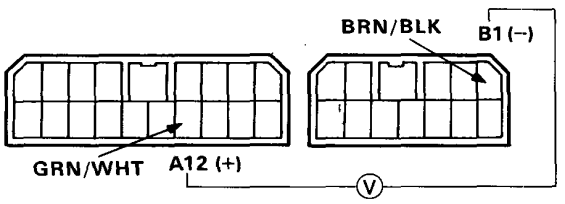

Is there battery voltage?

NO → Repair open in GRN/WHT wire between the A12 and the brake light switch.

YES

Check for loose control unit connectors. If necessary, substitute a known good control unit and recheck

Self-diagnosis LED indicator blinks once.

Disconnect the 12P connector from the control unit.

Turn the ignition switch ON.

Measure the voltage between the B3 (RED/WHT) and B1 (BRN/BLK) terminals.

NOTE: View from wire side.

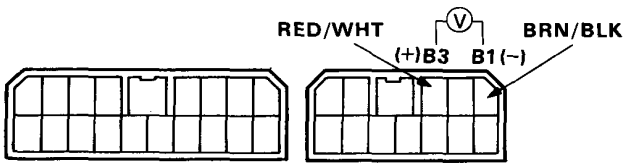

Is there voltage?

YES → Repair short to power source in RED/WHT wire between the B3 terminal and the lock-up control solenoid valve A.

NO

Turn the ignition switch OFF.

Disconnect the 3P connector from the lock-up control solenoid valves assembly.

Check for continuity between the B3 (RED/WHT) and B1 (BRN/BLK) terminals.

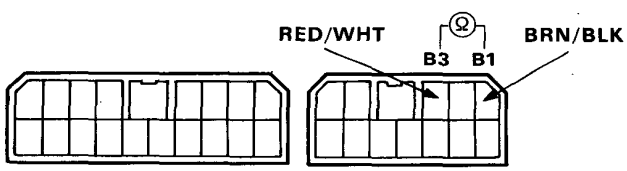

Is there continuity?

YES → Repair short to ground in RED/WHT wire between the B3 terminal and the lock-up control solenoid valve A.

NO

Connect the 3P connector to the lock-up control solenoid valve assembly.

Measure the resistance between the B3 (RED/WHT) and B1 (BRN/BLK) terminals.

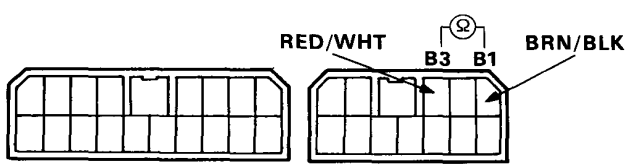

Is the resistance 14-30Ω?

NO → Check for open in RED/WHT wire between the B3 terminal and the lock-up control solenoid valve A. If wire is OK, check the Lock-up Control Solenoid Valve A (page 9-26).

YES

Check for loose control unit connectors. If necessary, substitute a known good control unit and recheck.

(cont'd)

Troubleshooting Flow Chart (cont'd)

Self-diagnosis LED indicator blinks twice.

Disconnect the 12P connector from the control unit.

Turn the ignition switch ON.

Measure the voltage between the B8 (WHT/BLK) and B1 (BRN/BLK) terminals.

Is there voltage? — YES → Repair short to power source in WHT/BLK wire between the B8 terminal and the lock-up control solenoid valve B.

NO

Turn the ignition switch OFF.

Disconnect the 3P connector from the lock-up control solenoid valves assembly.

Check for continuity between the B8 (WHT/BLK) and B1 (BRN/BLK) terminals.

Is there continuity? — YES → Repair short to ground in WHT/BLK wire between the B8 terminal and the lock-up control solenoid valve B.

NO

Connect the 3P connector to the lock-up control solenoid valve assembly.

Measure the resistance between the B8 (WHT/BLK) and B1 (BRN/BLK) terminals.

Is the resistance 14-30 Ω? — NO → Check for open in WHT/BLK wire between the B8 terminal and the lock-up control solenoid valve B. If wire is OK, check the Lock-up Control Solenoid Valve B (page 9-26).

YES

Check for loose control unit connectors. If necessary, substitute a known good control unit and recheck.

NOTE: View from wire side.

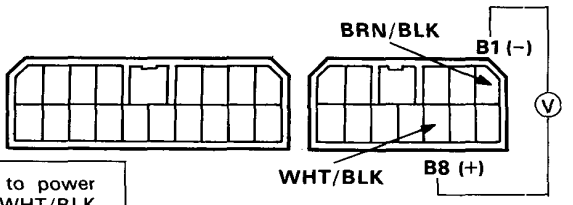

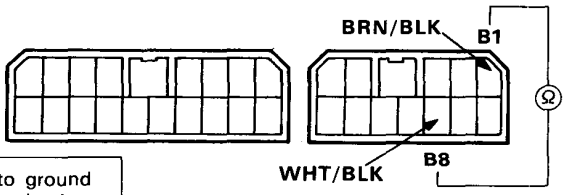

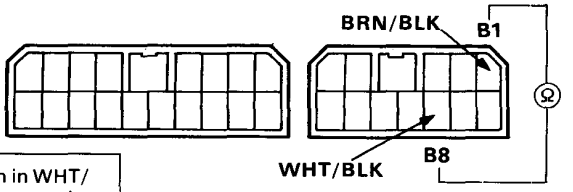

Self-diagnosis LED indicator blinks three times.

Turn the ignition switch ON.

Check whether the PGM-FI LED display blinks (page 6-22).

Does the LED blink? — YES → Repair the PGM-FI System (page 6-22).

NO

Turn the ignition switch OFF.

Disconnect the 18P and 12P connectors from the control unit.

Turn the ignition switch ON.

Measure the voltage between the A15 (ORN) and B1 (BRN/BLK) terminals.

NOTE: View from wire side.

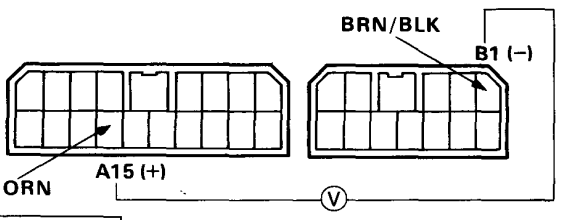

Is the voltage 4.75 — 5.25 V? — NO → Repair open or short in ORN wire between the A15 terminal and the A9 terminal of the PGM-FI ECU.

YES

Turn the ignition switch OFF.

Connect the 18P and 12P connectors to the control unit.

Turn the ignition switch ON.

Measure the voltage between the A16 (RED/YEL) and B1 (BRN/BLK) terminals.

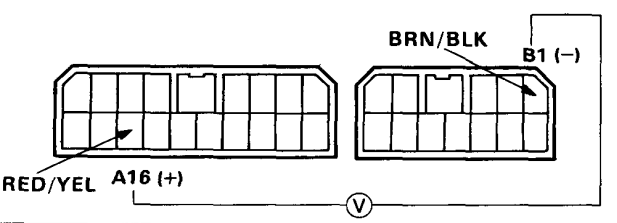

Is the voltage 0.44 — 0.56 V? — NO → Repair open or short in RED/YEL wire between the A16 terminal and the throttle angle sensor.

YES

Check for loose control unit connectors. If necessary, substitute a known good control unit and recheck.

(cont'd)

Troubleshooting Flow Chart (cont'd)

Self-diagnosis LED indicator blinks four times.

Jack up the front of the car and block one wheel.

Turn the ignition switch ON.

Rotate the front wheel and measure the voltage between the A6 (YEL/RED) and B1 (BRN/BLK) terminals.

Does the voltage 0 — 5 V appear alternately?

YES → Substitute a known good control unit and recheck.

NO →

WARNING

- **Set the parking brake securely and block the rear wheels.**
- **Jack up the front of the car and support with a rigid rack.**

NOTE: View from wire side.

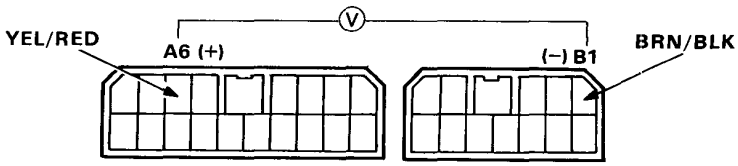

Turn the ignition switch OFF.

Disconnect the 18P and 12P connectors from the control unit.

Rotate the front wheel and check for continuity between the B1 (BRN/BLK) and A6 (YEL/RED) terminals.

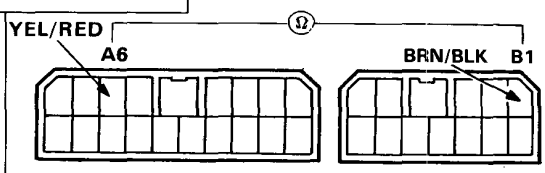

Do continuity and infinity alternately appear?

NO → Check for short or open in YEL/RED wire between the A6 terminal and the gauge assembly. If wire is OK, check the Speed Pulser (Section 16, Cruise Control).

YES → Check for loose control unit connectors. If necessary, substitute a known good control unit and recheck.

Self-diagnosis LED indicator blinks five times.

Check the shift lever position indicator in gauge for operation.

Does it operate properly?

NO → Repair the Shift Lever Position Indicator Circuit (Section 16).

YES

Turn the ignition switch ON.

Shift other than in [R] position.

Measure the voltage between the A1 (GRN/RED) and B1 (BRN/BLK) terminals.

NOTE: View from wire side.

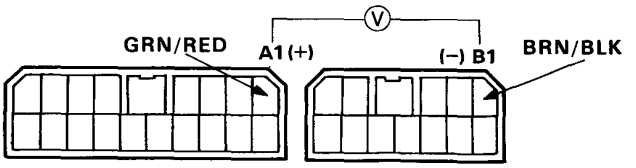

Is there battery voltage?

NO → Check for short in GRN/RED wire between the A1 terminal and the shift position console switch. If wire is OK, check for loose connectors. If necessary, substitute a known good control unit and recheck.

YES

Shift other than in [N] position.

Measure the voltage between the A2 (GRN) and B1 (BRN/BLK) terminals.

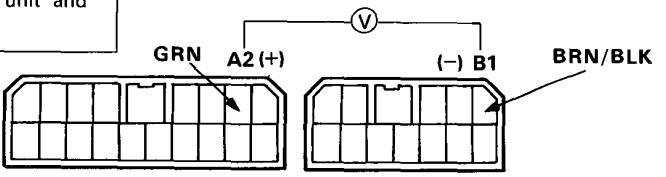

Is there battery voltage?

NO → Check for short in GRN wire between the A2 terminal and the shift position console switch. If wire is OK, check for loose control unit connectors. If necessary, substitute a known good control unit and recheck.

YES

Shift other than in [D] position.

Measure the voltage between the A3 (GRN/BLK) and B1 (BRN/BLK) terminals.

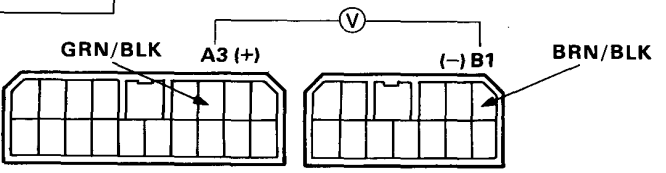

Is there battery voltage?

NO → Check for short in GRN/BLK wire between the A3 terminal and the shift position console switch. If wire is OK, check for loose control unit connectors. If necessary, substitute a known good control unit and recheck.

YES

(To page 9-16)

Troubleshooting Flow Chart (cont'd)

(From page 9-15)

Shift other than in [S] position.

Measure the voltage between the A4 (GRN/BLU) and B1 (BRN/BLK) terminals.

Is there battery voltage?

NO → Check for short in GRN/BLU wire between the A4 terminal and the shift position console switch. If wire is OK, check for loose control unit connectors. If necessary, substitute a known good control unit and recheck.

YES

Shift other than in [2] position.

Measure the voltage between the A5 (GRN/YEL) and B1 (BRN/BLK) terminals.

Is there battery voltage?

NO → Check for short in GRN/YEL wire between the A5 terminal and the shift position console switch. If wire is OK, check for loose control unit connectors. If necessary, substitute a known good control unit and recheck.

YES

Substitute a known good control unit and recheck.

NOTE: View from wire side.

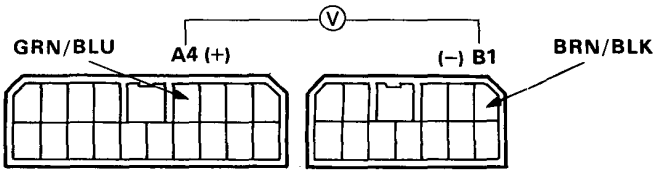

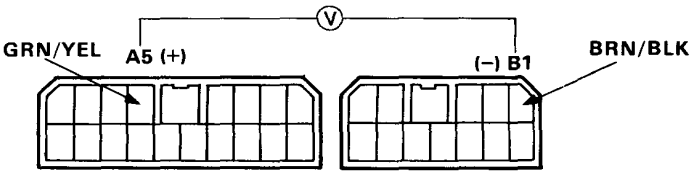

Self-diagnosis LED indicator blinks six times.

Check the shift lever position indicator in gauge for operation.

Does it operate properly?

NO → Repair the Shift Lever Position Indicator Circuit (Section 16).

YES

Turn the ignition switch ON.

Shift in [R] position.

Measure the voltage between the A1 (GRN/RED) and B1 (BRN/BLK) terminals.

NOTE: View from wire side.

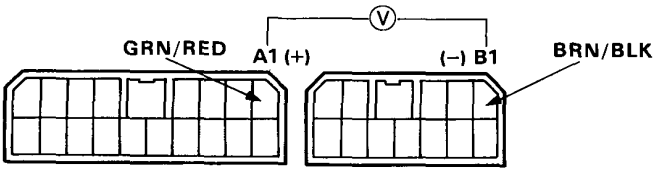

Is there voltage?

YES → Repair open in GRN/RED wire between the A1 terminal and the shift position console switch.

NO

Shift in [N] position.

Measure the voltage between the A2 (GRN) and B1 (BRN/BLK) terminals.

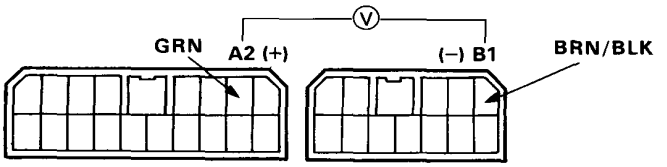

Is there voltage?

YES → Repair open in GRN wire between the A2 terminal and the shift position console switch.

NO

Shift in [D] position.

Measure the voltage between the A3 (GRN/BLK) and B1 (BRN/BLK) terminals.

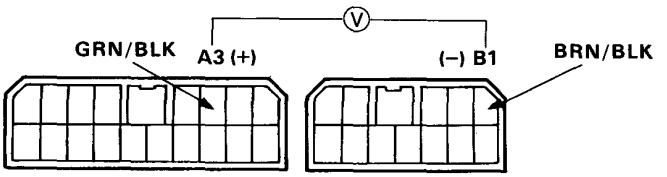

Is there voltage?

YES → Repair open in GRN/BLK wire between the A3 terminal and the shift position console switch.

NO

(To page 9-18)

(cont'd)

Troubleshooting Flow Chart (cont'd)

(From page 9-17)

Shift in [S] position.

Measure the voltage between the A4 (GRN/BLU) and B1 (BRN/BLK) terminals.

Is there voltage?

YES → Repair open in GRN/BLU wire between the A4 terminal and the shift position console switch.

NO

Shift in [2] position.

Measure the voltage between the A5 (GRN/YEL) and B1 (BRN/BLK) terminals.

Is there voltage?

YES → Repair open in GRN/YEL wire between the A5 terminal and the shift position console switch.

NO

Check for loose control unit connectors. If necessary, substitute a known good control unit and recheck.

NOTE: View from wire side.

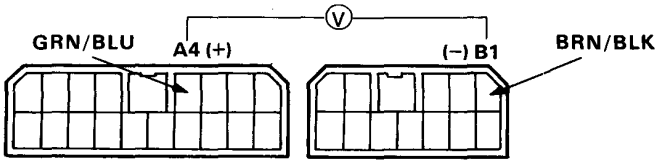

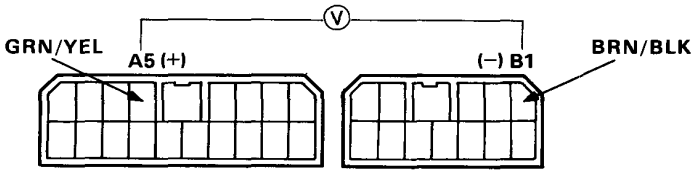

Self-diagnosis LED indicator blinks seven times.

Disconnect the 12P connector from the control unit.

Turn the ignition switch ON.

Measure the voltage between the B4 (BLU/YEL) and B1 (BRN/BLK) terminals.

NOTE: View from wire side.

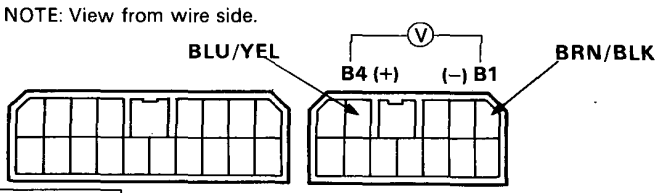

Is there voltage?

YES → Repair short to power source in BLU/YEL wire between the B4 terminal and the shift control solenoid valve A.

NO

Turn the ignition switch OFF.

Disconnect the 2P connector from the shift control solenoid valves assembly.

Check for continuity between the B4 (BLU/YEL) and B1 (BRN/BLK) terminals.

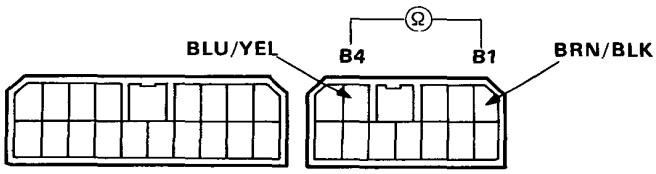

Is there continuity?

YES → Repair short to ground in BLU/YEL wire between the B4 terminal and the shift control solenoid valve A.

NO

Connect the 2P connector to the shift control solenoid valves assembly.

Measure the resistance between the B4 (BLU/YEL) and B1 (BRN/BLK) terminals.

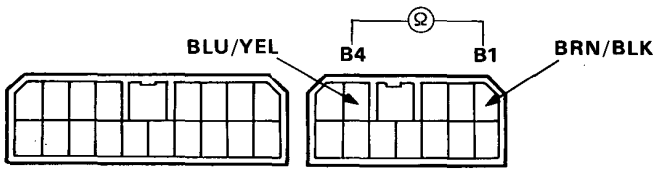

Is the resistance 14—30 Ω?

NO → Check for open in BLU/YEL wire between the B4 terminal and the shift control solenoid valve A. If wire is OK, check the Shift Control Solenoid Valve A (page 9-17).

YES

Check for loose control unit connectors. If necessary, substitute a known good control unit and recheck.

Troubleshooting Flow Chart (cont'd)

Self-diagnosis LED indicator blinks eight times.

Disconnect the 12P connector from the control unit.

Turn the ignition switch ON.

Measure the voltage between the B5 (GRN/WHT) and B1 (BRN/BLK) terminals.

Is there voltage?

YES → Repair short to power source in GRN/WHT wire between the B5 terminal and the shift control solenoid valve B.

NO

Turn the ignition switch OFF.

Disconnect the 2P connector from the shift control solenoid valves assembly.

Check for continuity between the B5 (GRN/WHT) and B1 (BRN/BLK) terminals.

Is there continuity?

YES → Repair short to ground in GRN/WHT wire between the B5 terminal and the shift control solenoid valve B.

NO

Connect the 2P connector to the shift control solenoid valve assembly.

Measure the resistance between the B5 (GRN/WHT) and B1 (BRN/BLK) terminals.

Is the resistance 14—30 Ω?

NO → Check for open in GRN/WHT wire between the B5 terminal and the shift control solenoid valve B. If wire is OK, check the Shift Control Solenoid Valve B (page 9-27).

YES

Check for loose control unit connectors. If necessary, substitute a known good control unit and recheck.

NOTE: View from wire side.

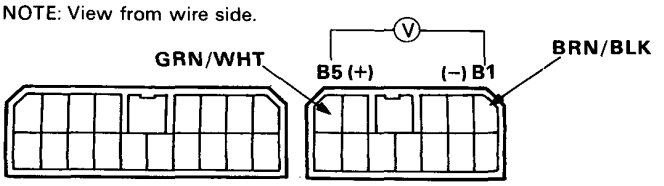

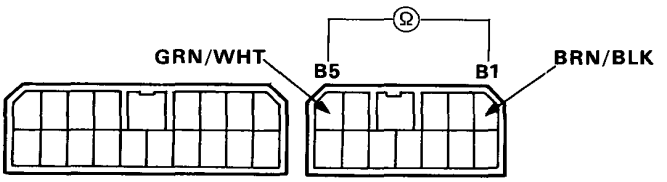

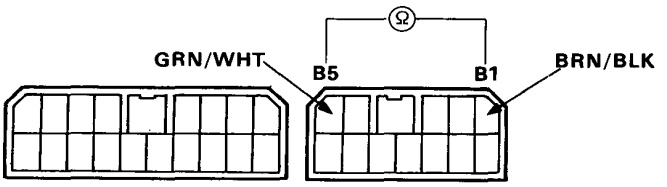

Self-diagnosis LED indicator blinks nine times.

Jack up the front of the car.

Turn the ignition switch ON.

Rotate the front wheels and measure the voltage between the A7 (GRY) and B1 (BRN/BLK) terminals.

Does the voltage 0 — 5 V appear alternately?

YES → Substitute a known good control unit and recheck.

NO →

WARNING

- **Set the parking brake securely and block the rear wheels.**
- **Jack up the front of the car and support with a rigid rack.**

NOTE: View from wire side.

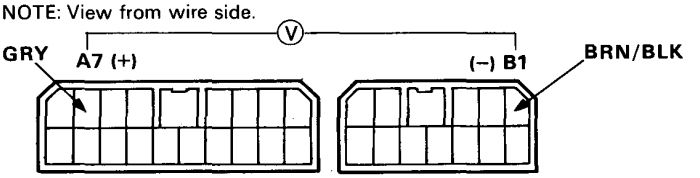

Turn the ignition switch OFF.

Disconnect the 18P and 12P connectors from the control unit.

Rotate the front wheels and check for continuity between the A7 (GRY) and B1 (BRN/BLK) terminals.

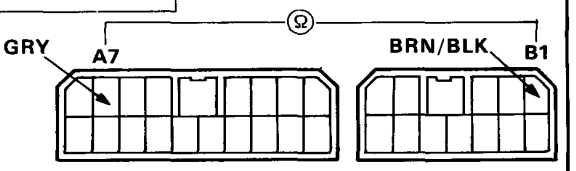

Do continuity and infinity alternately appear?

NO → Check for open or short in GRY wire between the A7 terminal and the A/T speed pulser. If wire is OK, check the A/T Speed Pulser (page 9-25).

YES → Check for loose control unit connectors. If necessary, substitute a known good control unit and recheck.

(cont'd)

Troubleshooting Flow Chart (cont'd)

Self-diagnosis LED indicator blinks ten times.

Turn the ignition switch ON.

Check whether the PGM-FI LED display blinks (page 6-22).

Does the LED blink?

NO → Repair the PGM-FI System (page 6-22).

YES

Turn the ignition switch OFF.

Disconnect the 18P and 12P connectors from the control unit.

Turn the ignition switch ON.

Measure the voltage between the A15 (ORN) and B1 (BRN/BLK) terminals.

NOTE: View from wire side.

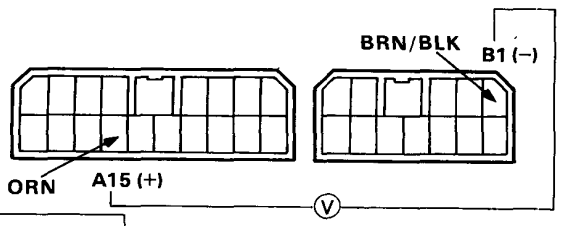

Is the voltage 4.75 — 5.25 V?

NO → Repair open or short in ORN wire between the A 15 terminal and the A9 terminal of the PGM-FI ECU.

YES

Turn the ignition switch OFF.

Connect the 18P and 12P connectors to the control unit.

Start the engine and warm it up to normal operating temperature.

Measure the voltage between the A11 (RED/WHT) and B1 (BRN/BLK) terminals.

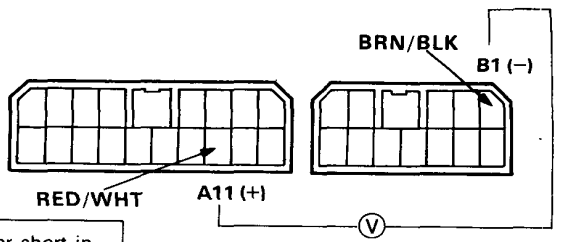

Is the voltage 0.50 — 0.90 V?

NO → Repair open or short in RED/WHT wire between the A11 terminal and the coolant temperature sensor.

YES

Check for loose control unit connectors. If necessary, substitute a known good control unit.

Self-diagnosis LED indicator blinks eleven times.

Disconnect the 18P and 12P connectors from the control unit.

Start the engine.

Measure the voltage between the A10 (BLU) and B1 (BRN/BLK) terminals.

Is there voltage?

NO → Repair open or short in BLU wire between the A10 terminal and the ignition coil.

YES → Check for loose control unit connectors. If necessary, substitute a known good control unit and recheck.

NOTE: View from wire side.

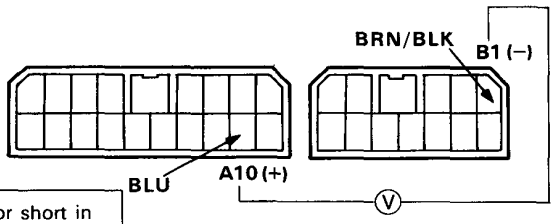

(cont'd)

Troubleshooting Flow Chart (cont'd)

Self-diagnosis LED indicator blinks twelve times.

Turn the ignition switch ON.

Measure the voltage between the A8 (YEL) and B1 (BRN/BLK) terminals.

Is there battery voltage?

NO → Repair short in YEL wire between the A8 terminal and the cooling fan control unit.

YES → Check for loose control unit connectors. If necessary, substitute a known good control unit and recheck.

NOTE: View from wire side.

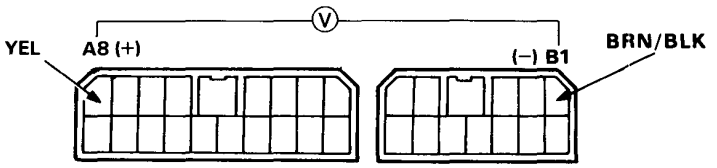

A/T Speed Pulser

Test

1. Apply the parking brake, block the rear wheels and jack up the front of the car.
2. Disconnect the A/T speed pulser 2P connector.
3. Rotate the front wheels and be sure that continuity and no continuity appear alternately between the two terminals.

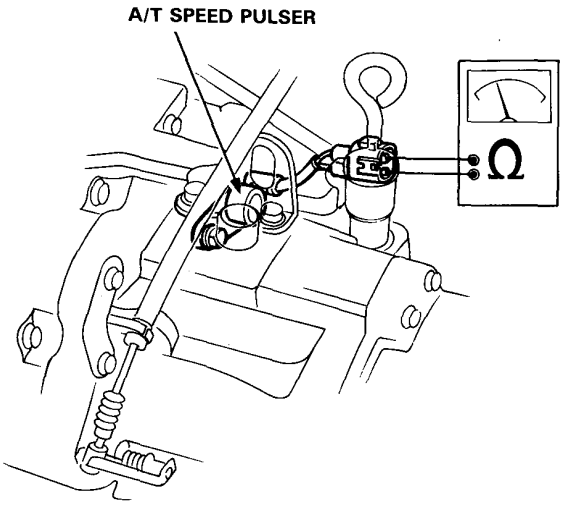

Removal/Inspection

1. Remove the 6 mm bolt from the transmission housing and remove the A/T speed pulser assembly.

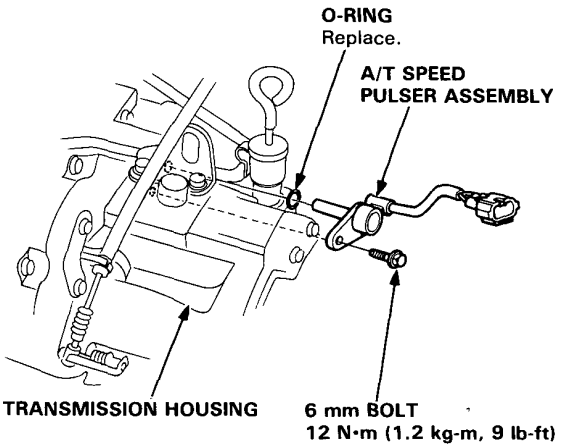

2. Bring a magnet close to the A/T speed pulser assembly and check for continuity.

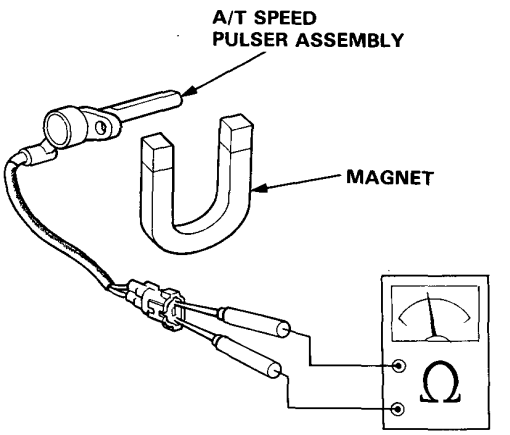

A/T speed pulser assembly is in good condition if there is:
- Continuity with a magnet close to the pulser assembly.
- No continuity with a magnet away from the pulser assembly.

If the A/T speed pulser is normal, go to Rotor Disassembly/Inspection.

3. Replace the O-ring with a new one before reassembling the A/T speed pulser.

CAUTION: Carefully inspect the A/T speed pulser before installing. Do not install it that shows signs of being dropped or improperly handled.

Lock-up Control Solenoid Valve A/B

Test

NOTE: Lock-up control solenoid valves A and B must be removed/replaced as an assembly.

1. Disconnect the connector from the lock-up control solenoid valve A/B.

   NOTE: Do not remove the lock-up control solenoid valve A/B stay.

2. Measure the resistance between the No.1 terminal of the lock-up control solenoid valve connector and body ground and between the No.3 terminal and body ground.

   STANDARD: 16–20 Ω at 25°C

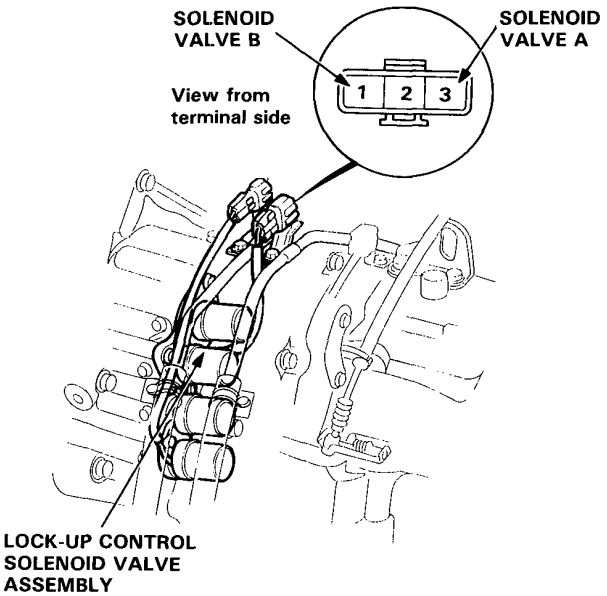

3. Replace the lock-up control solenoid valve assembly if the resistance is out of specification.

4. Connect the No.1 terminal of the lock-up control solenoid valve connector to the battery positive terminal and No.3 terminal to the battery positive terminal.
   A clicking sound should be heard each time the connection is made.

5. If not, check for continuity between the harness and body ground.

6. Replace the lock-up control solenoid valve assembly if there is continuity between the harness and body ground.

Replacement

1. Remove the three mounting bolts and lock-up control solenoid valve assembly.

   NOTE: Be sure to remove or replace the lock-up control solenoid valves A and B as an assembly.

2. Check the lock-up control solenoid valve oil passages for dust or dirt and replace as an assembly, if necessary.

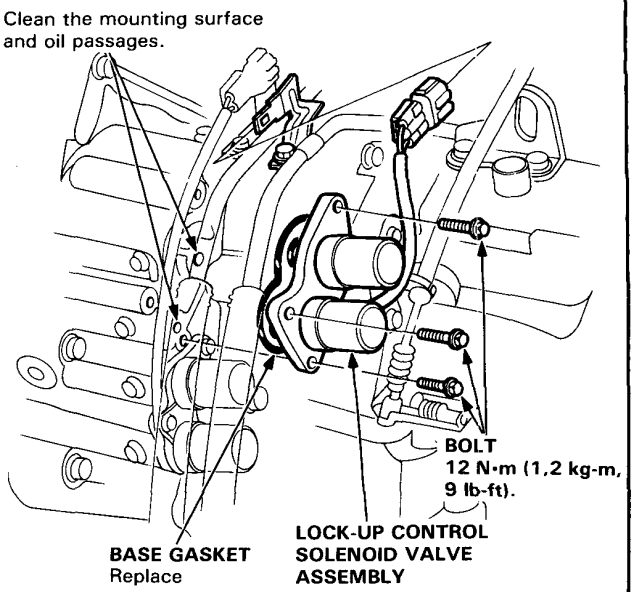

3. Clean the mounting surface and oil passages of the lock-up control solenoid valve assembly and install a new base gasket.

4. Check the connector for rust or dirt and reconnect it securely.

Shift Control Solenoid Valve A/B

Test

NOTE: Shift control solenoid valves A and B must be removed/replaced as an assembly.

1. Disconnect the connector from the shift control solenoid valve A/B.

   NOTE: Do not remove the shift control solenoid valve A/B stay.

2. Measure the resistance between the No.1 terminal of the solenoid valve connector and body ground and between the No.2 terminal and body ground.

   STANDARD: 16—20 Ω at 25°C

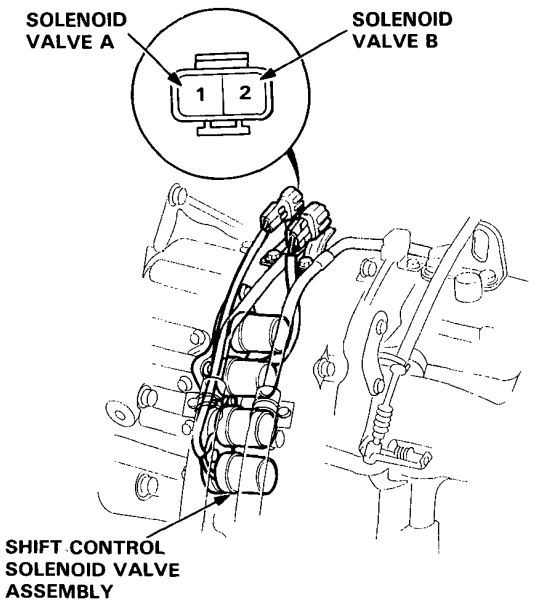

3. Replace the shift control solenoid valve assembly if the resistance is out of specification.

4. Connect the No.1 terminal of the solenoid valve connector to the battery positive terminal and the No.2 terminal to the battery positive terminal.
   A clicking sound should be heard each time the connection is made.

5. If not check for continuity between the harness and body ground.

6. Replace the shift control solenoid valve assembly if there is continuity between the harness and body ground.

Replacement

1. Remove the three bolts and shift control solenoid valve assembly.

   NOTE: Be sure to remove or replace the shift control solenoid valves A and B as an assembly.

2. Check the shift control solenoid valve oil passages for dust or dirt and replace as an assembly, if necessary.

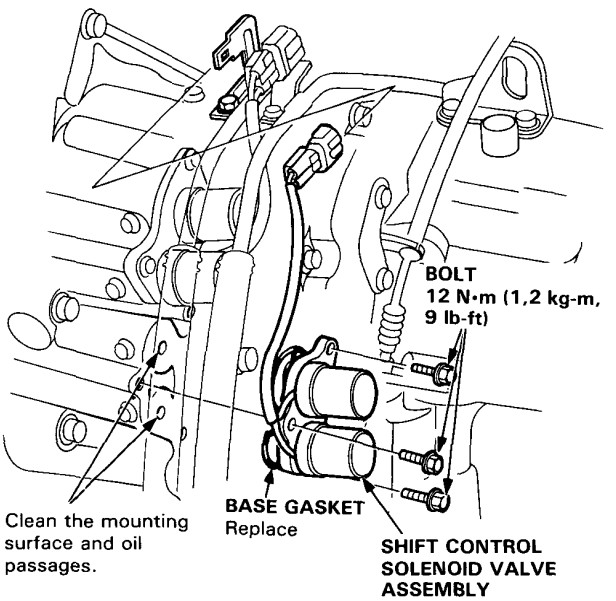

3. Clean the mounting surface and oil passage of the shift control solenoid valve assembly, and install a new base gasket.

4. Check the connector for rust or dirt and reconnect it securely.

S_4 Switch

Test

1. Remove the center console.
2. Disconnect the switch connector and remove the S_4 switch.
3. Check for continuity between the terminals by pressing and releasing the switch button according to the table below.

TERMINAL / POSITION	B	A	C	D		E
PRESS	○	○		○	⊗	○
RELEASE		○		○	⊗	○

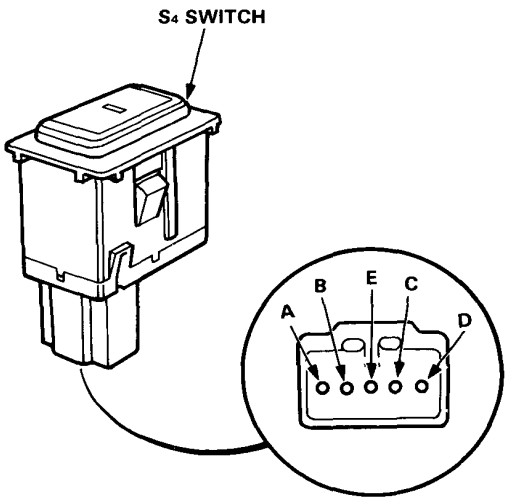

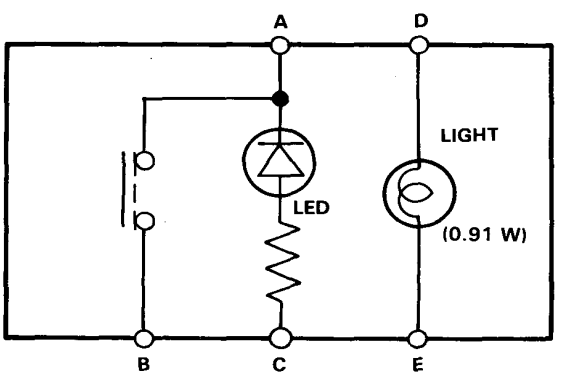

Symptom-to-Component Chart

Hydraulic System

PROBLEM	REFER TO
Engine runs, but car does not move in any gear.	1,3,4,5,7,8 9,39
Car moves in 2, but not in S or D.	8,10,11,12 58
Car moves in S or D, but not in 2.	8,13,14
Car moves in S,D, or 2, but not in R.	5,7,15,36
Poor acceleration Engine races when starting off in S: —Stall rpm high in S,D and 2 —Stall rpm high in S and D —Stall rpm high in 2 —Stall rpm normal —Stall rpm low	 1,3,4,8,44 47 8,10,12 8,14 16 17,18,35,50 51
Excessive idle vibration	3,35,39,50 51
Shift-up speed is too fast or slow.	57
Jumps from 1st to 3rd in S.	57
Jumps from 1st to 4th in D.	54,57
Shift-up point too early/late: —1st to 2nd, 2nd to 3rd, 3rd to 4th —1st to 2nd —2nd to 3rd —3rd to 4th	 57 22,53,57 23,54,57 24,53,57
Harsh upshift from 1st to 2nd	14,19,23
Harsh upshift from 2nd to 3rd	19,24,26,33
Harsh upshift from 3rd to 4th	19,25,34,35
Harsh downshift from 2nd to 1st	19,23,26,40
Harsh downshift from 3rd to 2nd	19,24,30,41
Harsh downshift from 4th to 3rd	19,25,42
Engine races when shifting from 2nd to 3rd.	19,24,26,27 31,33
Engine races when shifting from 3rd to 4th. (Shift point OK)	19,25,30,34
Excessive shock when shifting from 2nd to 3rd	19,24,29,41 48
Excessive shock when shifting from 3rd to 4th (Shift point OK)	19,30,42,48
Car creeps forward in N. (Shift cable adjusted properly.)	12,14,16,33 36,37,38
Excessive time lag from N to S/D. (Shift cable adjusted properly.)	12,28
Excessive time lag from N to R (Shift cable adjusted properly.)	5,21,34

	PROBABLE CAUSE
1	ATF level too low
2	ATF level too high
3	Oil pump seized, gear damaged, foreign matter stuck in gear
4	Regulator valve stuck or spring weak/damaged
5	Servo shaft stuck
6	3rd gears worn/damaged
7	Mainshaft damaged
8	Control cable misadjusted, cut or damaged
9	Final gear worn/damaged
10	Countershaft and one-way clutch seized/damaged
11	1st gears worn/damaged
12	1st clutch faulty a. Clutch piston stuck b. Foreign material stuck in clutch check valve c. Clutch O-ring worn/damaged d. Clutch disc worn e. Clutch feed pipe/O-ring worn/damaged
13	2nd gears worn/damaged
14	2nd clutch faulty a. Clutch piston stuck b. Foreign material stuck in clutch check valve c. Clutch O-ring worn/damaged d. Clutch disc worn e. Clutch seal ring seized/damaged
15	Reverse gears worn/damaged
16	Torque converter one-way clutch seized
17	Carburetor throttle cable misadjusted
18	Transmission throttle control cable misadjusted
19	Throttle valve B faulty
20	1—2 shift valve faulty
21	2—3 shift valve faulty
22	3—4 shift valve faulty
23	2nd accumulator faulty
24	3rd accumulator faulty
25	4th accumulator faulty
26	2rd orifice control valve faulty
27	Foreign material in main orifice
28	Foreign material in 1st orifice
29	Foreign material in 2nd orifice
30	3rd orifice control valve faulty

PROBLEM	REFER TO
—Abnormal noise in all gears, neutral and park	3,6,43
—Engine accelerates up to 50 km/h, but not more	16
—Vibration in all gears	39
—Harsh to shift	8,45
—Car has only 4th gear.	57
—Transmission has no park.	8,45
—Stall rpm is high, but clutch pressure OK in all positions.	47
Harsh lock-up clutch disengagement —Engine stalls easily. —No power sound in low/middle speed —Noise/vibration in low/middle speed —Excessive shock while shifting	18,19,49,50 51,52,55,56 57
Lock-up clutch hunts ON—OFF. —Tachometer needle swings large while driving. —Car shakes back and forth while driving.	18,19,51,55 56,57
Lock-up clutch does not engage.	18,19,47,50 51,55,57

	PROBABLE CAUSE
31	Foreign material in 3rd orifice
32	Foreign material in 4th orifice
33	3rd clutch faulty a. Clutch piston stuck b. Foreign material stuck in clutch check valve c. Clutch O-ring worn/damaged d. Clutch disc worn e. Clutch feed pipe/O-ring worn/damaged
34	4th clutch faulty a. Clutch piston stuck b. Foreign material stuck in clutch check valve c. Clutch O-ring worn/damaged d. Clutch disc worn e. Clutch feed pipe/O-ring worn/damaged
35	Engine power low
36	Needle bearing seized
37	Washers/collars seized
38	Clutch clearance incorrect
39	Drive plate faulty or transmission assembly improperly installed
40	2nd check ball stuck
41	3rd check ball stuck
42	4th check ball stuck
43	Mainshaft/countershaft ball bearing damaged
44	Oil filter clogged
45	Body/case wire cable joint damaged
46	Modulator valve fautly
47	Torque converter check valve faulty
48	Foreign material in separator orifice
49	Lock-up timing valve B faulty
50	Lock-up shift valve faulty
51	Lock-up piston in torque converter faulty
52	Lock-up control valve faulty
53	Shift control solenoid valve A faulty
54	Shift control solenoid valve B faulty
55	Lock-up control solenoid valve A faulty
56	Lock-up control solenoid valve B faulty
57	Control unit system faulty

NOTE: After transmission is installed:
- Make sure the floor mat does not interfere with accelerator pedal travel. Fully depress accelerator pedal and check to make sure the throttle lever is fully opened.
- Release the accelerator pedal and check both inner control cables to be sure they have slight play.

Warm up the engine to operating temperature.

[D] and [S] Range

1. Apply parking brake and block the wheels. Start the engine, then move the slector to [D] while depressing the brake pedal. Depress the accelerator pedal, and release it suddenly. Engine should not stall.
2. Check that shift points occur at approximate speeds shown. Also check for abnormal noise and clutch slippage.
3. Apply parking brake and block the wheels. Start the engine, then move the selector [S] while depressing the brake pedal. Depress the accelerator pedal, and release it suddenly. Engine should not stall.

- **Upshift**

[D]		1st—2nd	2nd—3rd	3rd—4th	LC.ON
1/12 throttle Coasting down-hill from a stop	**km/h**	15—19	25—30	37—44	62—66
	mph	9—12	15.5—19	23—27.5	39—41
7/16 throttle Acceleration from a stop	**km/h**	27—33	49—57	96—105	92—96
	mph	17—20.5	30—35	60—65	57—60
Full-throttle Acceleration from a stop	**km/h**	56—64	100—113	157—174	145—149
	mph	35—40	62—70	98—108	90—93

[S] (with S4 switch in operation)		1st—2nd	2nd—3rd	3rd—4th	LC.ON
1/12 throttle Coasting down-hill from a stop	**km/h**	20—24	33—38	47—54	62—66
	mph	12.4—15	20.5—24	29—33.5	39—41
7/16 throttle Acceleration from a stop	**km/h**	36—42	61—69	93—102	106—110
	mph	22—26	38—43	58—63	66—68
Full-throttle Acceleration from a stop	**km/h**	56—64	100—113	157—174	145—149
	mph	35—40	62—70	98—108	90—92.6

- **Downshift**

[D]		LC.OFF	4th—3rd	3rd—2nd	2nd—1st
1/12 throttle Coasting or braking to a stop	**km/h**	58—62	20—25	—	8—13
	mph	36—39	12.4—15.5	—	4.9—8
7/16 throttle When car is slowed by increased grade, wind, etc.	**km/h**	78—82	—	—	—
	mph	48—51	—	—	—
Full-throttle When car is slowed by increased grade, wind, etc.	**km/h**	143—147	141—157	77—88	41—49
	mph	89—91	88—98	48—55	25—30.5

[S] (with S4 switch in operation)		LC.OFF	4th—3rd	3rd—2nd	2nd—1st
1/12 throttle Coasting or braking to a stop	**km/h**	58—62	20—25	—	8—13
	mph	36—39	12.4—15.5	—	4.9—8
7/16 throttle When car is slowed by increased grade, wind, etc.	**km/h**	85—89	—	—	—
	mph	53—55.3	—	—	—
Full-throttle When car is slowed by increased grade, wind, etc.	**km/h**	143—147	141—157	88—99	45—53
	mph	89—91	88—98	55—61.5	28—33

KX only

- **Upshift**

D		1st–2nd	2nd–3rd	3rd–4th	LC.ON
1/12 throttle Coasting down-hill from a stop	**km/h**	15–19	25–30	37–44	62–66
	mph	9–12	15.5–19	23–27.5	39–41
7/16 throttle Acceleration from a stop	**km/h**	27–33	49–57	66–75	92–96
	mph	17–20.5	30–35	41–46.6	57–60
Full-throttle Acceleration from a stop	**km/h**	56–64	107–120	157–174	145–149
	mph	35–40	66.5–74.6	98–108	90–93

S (with S4 switch in operation)		1st–2nd	2nd–3rd	3rd–4th	LC.ON
1/12 throttle Coasting down-hill from a stop	**km/h**	20–24	33–38	47–54	62–66
	mph	12.4–15	20.5–24	29–33.5	39–41
7/16 throttle Acceleration from a stop	**km/h**	36–42	61–69	93–102	106–110
	mph	22–26	38–43	58–63	66–68
Full-throttle Acceleration from a stop	**km/h**	56–64	100–113	157–174	145–149
	mph	35–40	62–70	98–108	90–92.6

- **Downshift**

D		LC.OFF	4th–3rd	3rd–2nd	2nd–1st
1/12 throttle Coasting or braking to a stop	**km/h**	58–62	20–25	—	8–13
	mph	36–39	12.4–15.5	—	4.9–8
7/16 throttle When car is slowed by increased grade, wind, etc.	**km/h**	78–82	—	—	—
	mph	48–51	—	—	—
Full-throttle When car is slowed by increased grade, wind, etc.	**km/h**	143–147	141–157	77–88	41–49
	mph	89–91	88–98	48–55	25–30.5

S (with S4 switch in operation)		LC.OFF	4th–3rd	3rd–2nd	2nd–1st
1/12 throttle Coasting or braking to a stop	**km/h**	58–62	20–25	—	8–13
	mph	36–39	12.4–15.5	—	4.9–8
7/16 throttle When car is slowed by increased grade, wind, etc.	**km/h**	85–89	51–56	—	—
	mph	53–55.3	32–35	—	—
Full-throttle When car is slowed by increased grade, wind, etc.	**km/h**	143–147	141–157	88–99	45–53
	mph	89–91	88–98	55–61.5	28–33

CAUTION: Do not shift from D or S to 2 at speeds over 100 km/h (62.5 mph); you may damage the transmission.

2 (2nd Gear)

1. Accelerate from a stop at full throttle. Check that there is no abnormal noise or clutch slippage.
2. Upshifts and downshifts should not occur with the selector in this range.

R (Reverse)

Accelerate from a stop at full throttle, and check for abnormal noise and clutch slippage.

P (Park)

Park car on a slope (approx. 16°), apply the parking brake, and shift into Park. Release the brake; the car should not move.

Pressure

Testing

CAUTION: Before testing, be sure transmission is filled to proper level.

NOTE:
- Stop engine when attaching hoses for pressure tests.
  Torque hose fitting to 18 N·m (1.8 kg-m, 12 lb-ft).
- Do not reuse aluminum washers.

GAUGE SET 07406–0020003
(includes pressure hose set 07406–0020201)

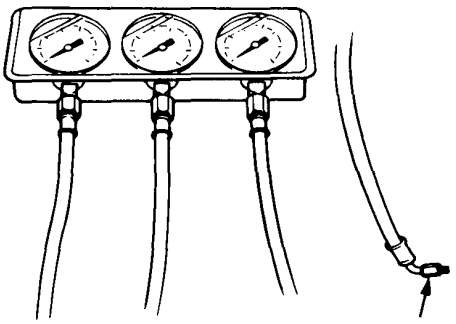

Line Pressure Measurement
- Set the parking brake securely.
- Run the engine at 2,000 min^{-1} (rpm).

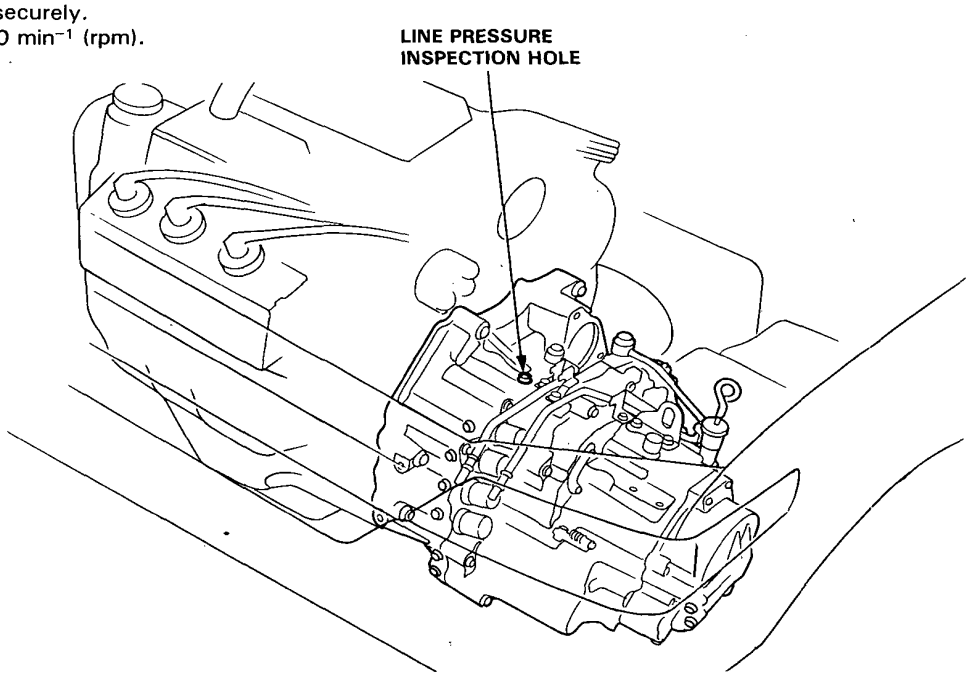

PRESSURE	SELECTOR POSITION	SYMPTOM	PROBABLE CAUSE	FLUID PRESSURE	
				Standard	Service Limit
Line	N or P	No (or low) Line pressure	Torque converter, oil pump pressure regulator, torque converter check valve, oil pump	814–863 (8.3–8.8 kg/cm², 118–125 psi)	765 kPa (7.8 kg/cm², 111 psi)

Clutch Pressure Measurement

- Set the parking brake securely and block the wheels.
- Jack up the front of the car and support it with a rigid rack.
- Run the engine at 2,000 min^{-1} (rpm).

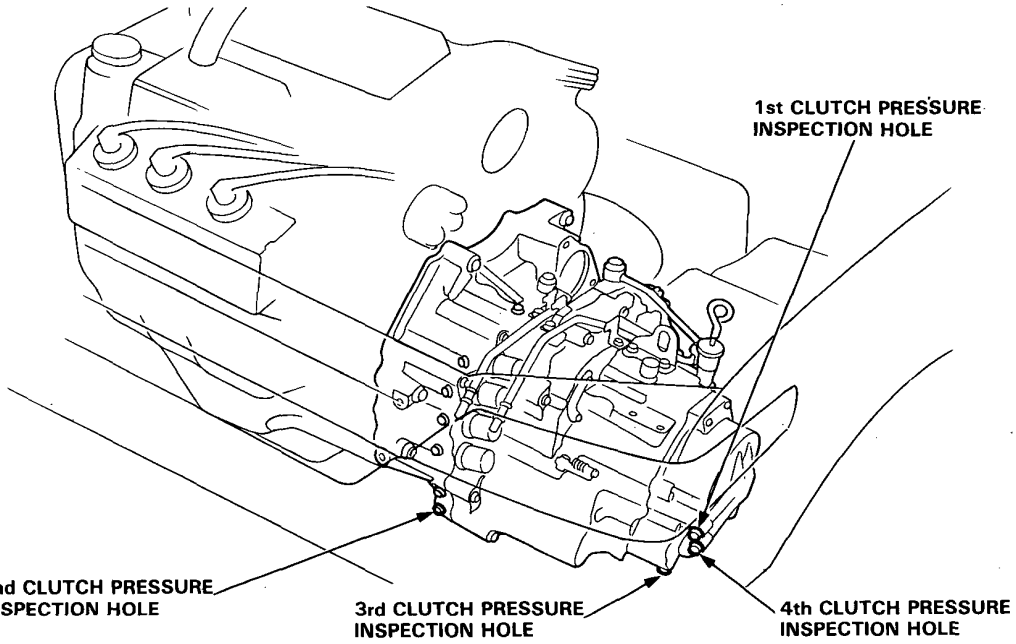

PRESSURE	SELECTOR POSITION	SYMPTOM	PROBABLE CAUSE	FLUID PRESSURE	
				Standard	Service Limit
1st Clutch	S or D	No or low 1st pressure	1st Clutch	814–863 kPa (8.3–8.8 kg/cm², 118–125 psi)	765 kPa (7.8 kg/cm², 111 psi)
2nd Clutch	2	No or low 2nd pressure	2nd Clutch	490 kPa (5.0 kg/cm², 71 psi) (throttle fully closed)	441 kPa (4.5 kg/cm², 64 psi) (throttle fully closed)
3rd Clutch	S	No or low 3rd pressure	3rd Clutch	863 kPa (8.8 kg/cm², 125 psi) (throttle more than 3/8 opened)	765 kPa (7.8 kg/cm², 111 psi) (throttle more than 3/8 opened)
4th Clutch	S (with S4 switch in operation or D	No or low 4th pressure	4th Clutch		
	R		Servo valve		

(cont'd)

Testing (cont'd)

Throttle B Pressure Measurement

- Set the parking brake securely and block the wheels.
- Run the engine at 1,000 min^{-1} (rpm).
- Disconnect the throttle control cable from the throttle lever and set the control lever in full throttle position.

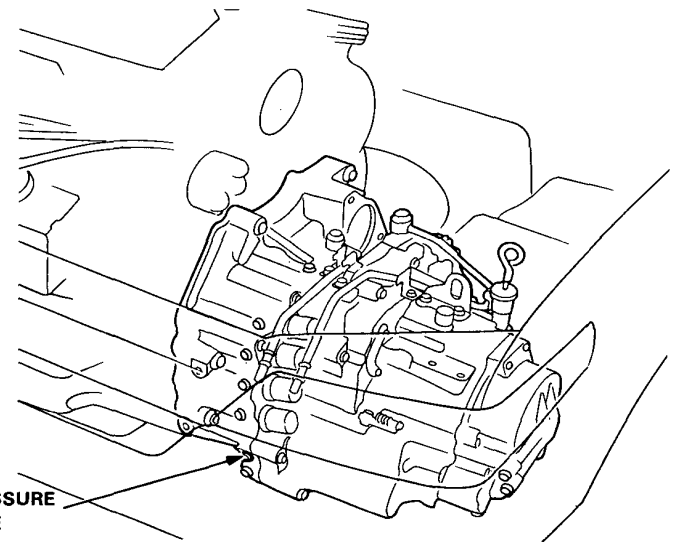

PRESSURE	SELECTOR POSITION	SYMPTOM	PROBABLE CAUSE	FLUID PRESSURE	
				Standard	Service Limit
Throttle B	[S] or [D]	No (or low) Throttle B pressure	Throttle valve B	814—863 kPa (8.3—8.8 kg/cm², 118—125 psi)	765 kPa (7.8 kg/cm², 111 psi)

Stall Speed

Test

CAUTION:
- **To prevent transmission damage, do not test stall speed for more than 10 seconds at a time.**
- **Do not shift the lever while rising the engine speed.**
- **Be sure to remove the pressure gauge before testing stall speed.**

1. Engage parking brake and block the front wheels.
2. Connect safety chains to both front two hooks and attach, with minimum slack, to some strong stationary object.
3. Connect tachometer, and start the engine.
4. After the engine has warmed up to normal operating temperature, shift into [2].
5. Fully depress the brake pedal and accelerator for 6 to 8 seconds, and note engine speed.
6. Allow 2 minutes for cooling, then repeat same test in [D], [S], and [R].

   Stall speed in [D], [S], [2] and [R] must be the same, and must also be within limits:

   NOTE:
   Stall speed test must be made only for checking the cause of trouble.

Stall Speed RPM:
Specification: 2,300 min^{-1} (rpm)
Service Limit: 2,150—2,450 min^{-1} (rpm)

TROUBLE	PROBABLE CAUSE
Stall rpm high in [D], [S], [2] & [R]	• Low fluid level or oil pump output. • Clogged oil strainer. • Pressure regulator valve stuck closed. • Slipping clutch.
Stall rpm high in [R]	• Slippage of 4th clutch
Stall rpm high in [2]	• Slippage of 2nd clutch
Stall rpm high in [D] & [S]	• Slippage of 1st clutch or 1st gear one-way clutch
Stall rpm low in [D], [S], [2] & [R]	• Engine output low • Torque converter one-way clutch slipping

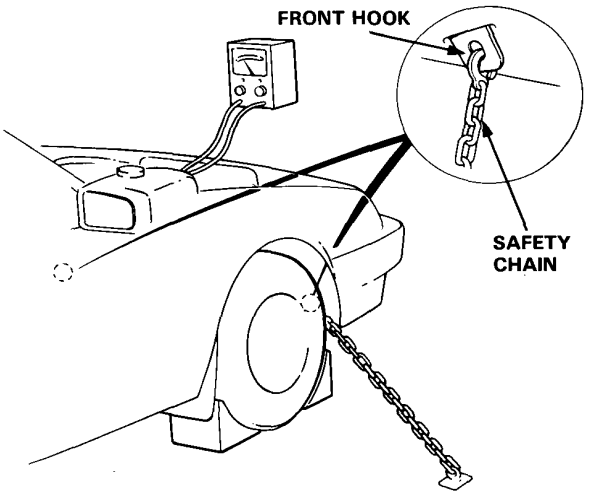

Fluid Level

Checking/Changing

Checking

With the car on level ground, pull the transmission dipstick and check the level of fluid immediately after the engine is shut off (within one minute). The fluid level should be between the full and low marks. Push the dipstick all the way in to check the fluid level. If the level is at, or below, the low mark, add DEXRON-type automatic transmission fluid.

Changing

1. Bring the transmission up to operating temperature by driving the car. Park the car on level ground, turn the engine off, then remove drain plug.

2. Reinstall the drain plug with a new washer, then refill the transmission to the full mark on the dipstick.

   Automatic transmission Capacity:
   3.2 ℓ (3.4 U.S. qts., 2.8 Imp. qt) at change
   6.5 ℓ (6.9 U.S. qts., 5.7 Imp. qt) after overhaul

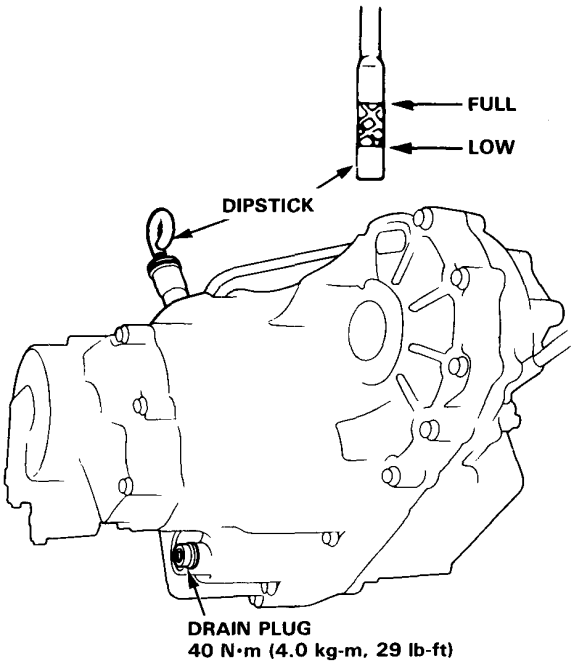

Shift Indicator Light

Check and Installation

1. Check for continuity between indicator light connector terminals as shown. If there is no continuity, check for a burned out bulb or open circuit.

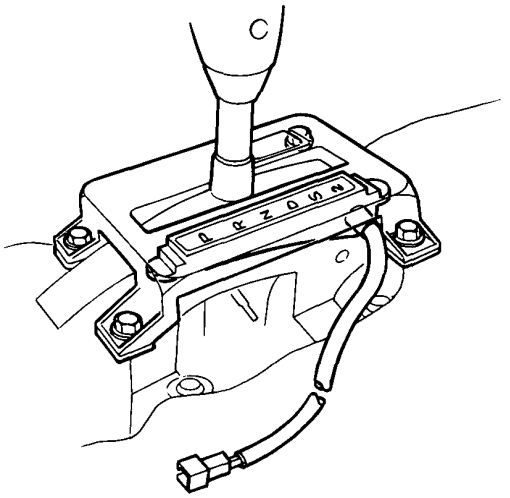

2. Install the indicator bulb in the bulb housing. Insert the bulb housing into the slot in the escutcheon, then turn 90° to bulb housing.

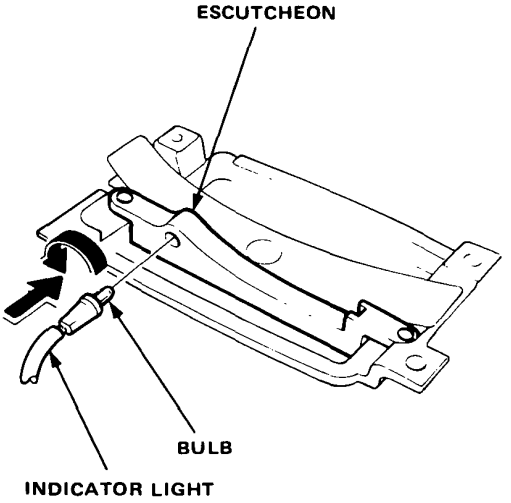

Shift Indicator Panel

Adjustment

1. Check that the index mark of the indicator aligns with the N mark of the shift indicator panel with the transmission in NEUTRAL.

2. If not aligned, remove the panel mounting screws and adjust by moving the panel.

   NOTE: Whenever the escutcheon is removed for indicator bulb replacement etc., reinstall the panel as described above.

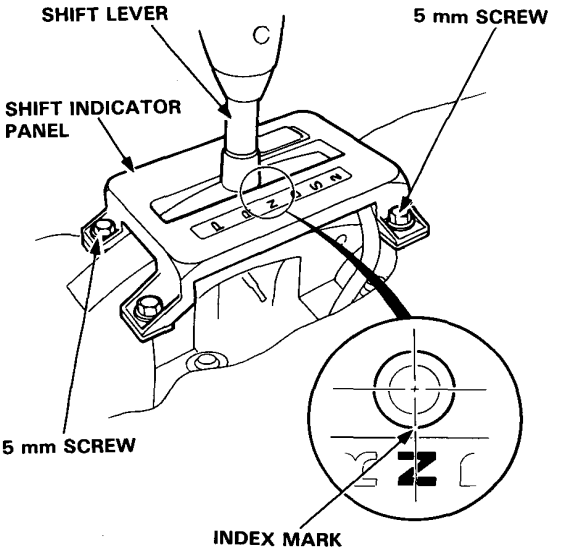

Gearshift Selector

Disassembly/Reassembly

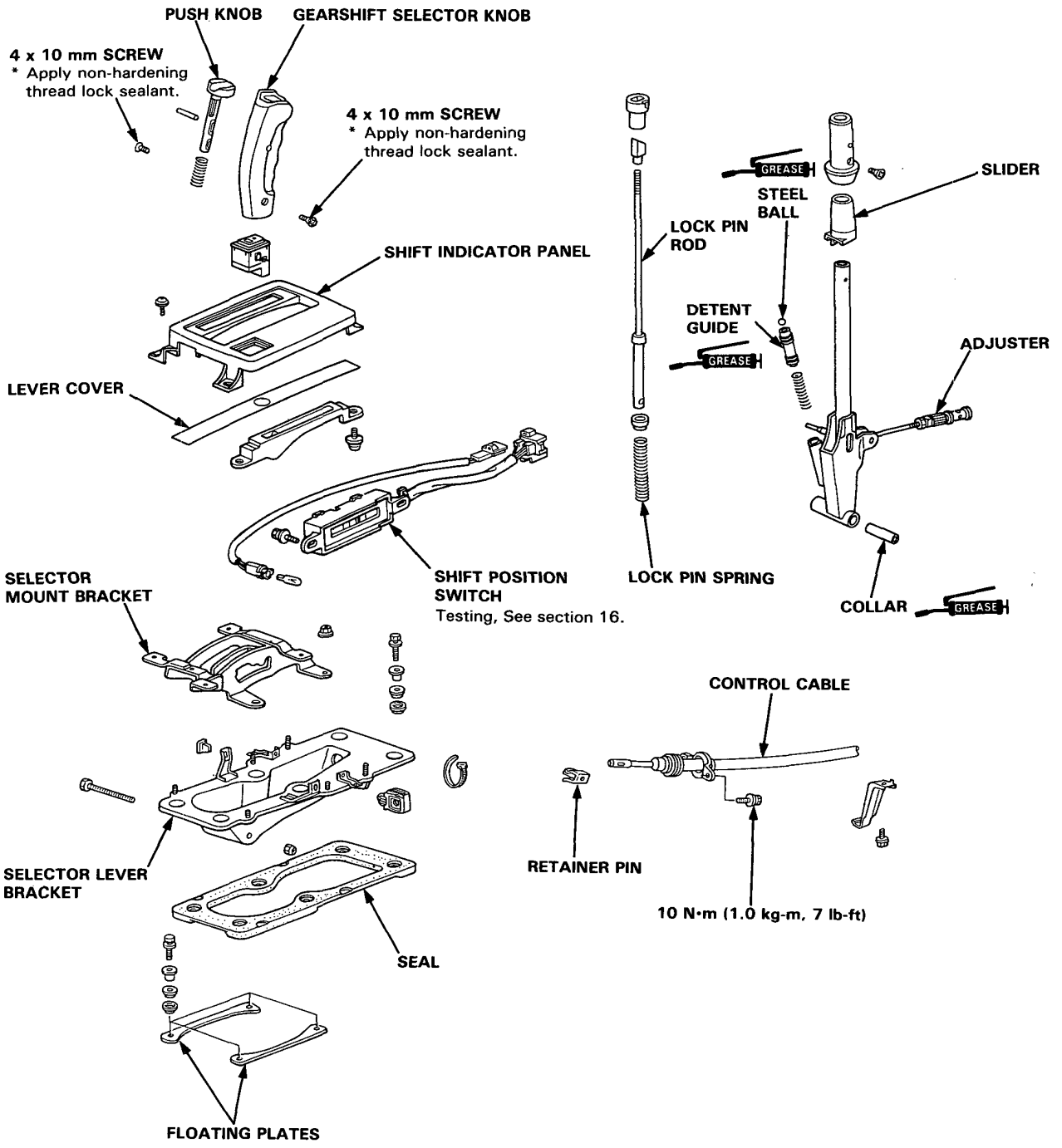

Shift Cable

Adjustment

1. Start the engine. Shift to reverse to see if the reverse gear engages. If not, refer to Troubleshooting on pages 9-30 and 31.

2. With the engine off, remove the console.

3. Shift to Reverse, then remove the lock pin from the cable adjuster.

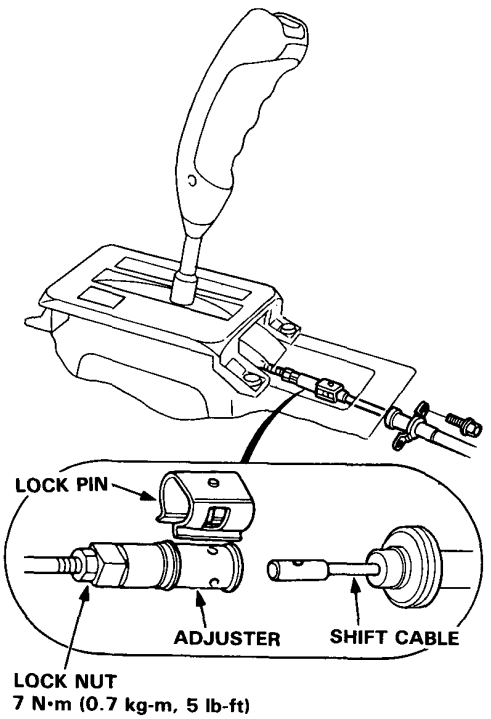

4. Check that the hole in the adjuster is perfectly aligned with the hole in the shift cable.

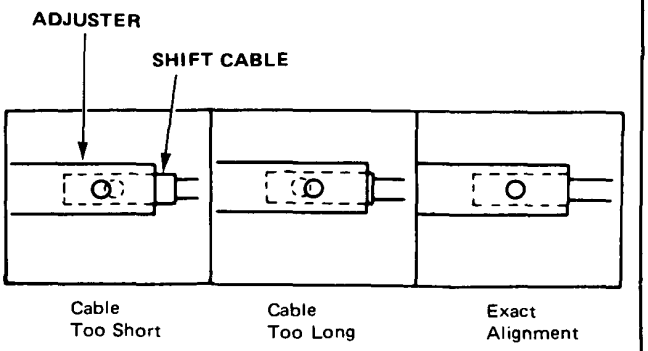

NOTE: There are two holes in the end of the shift cable. They are positioned 90° apart to allow cable adjustments in 1/4 turn increments.

5. If not perfectly aligned, loosen the locknut on shift cable and adjust as required.

6. Tighten the locknut.

7. Install the lock pin on the adjuster.

NOTE: If you feel the lock pin binding as you reinstall it, the cable is still out of adjustment and must be readjusted.

8. Start the engine and check the shift lever in all gears. If any gear does not work properly, refer to troubleshooting on pages 9-30 and 31.

Throttle Control Cable

Adjustment/Inspection

1. Loosen locknuts (A) and (B) on the throttle control cable.

2. Press down as shown on the throttle control lever until it stops.

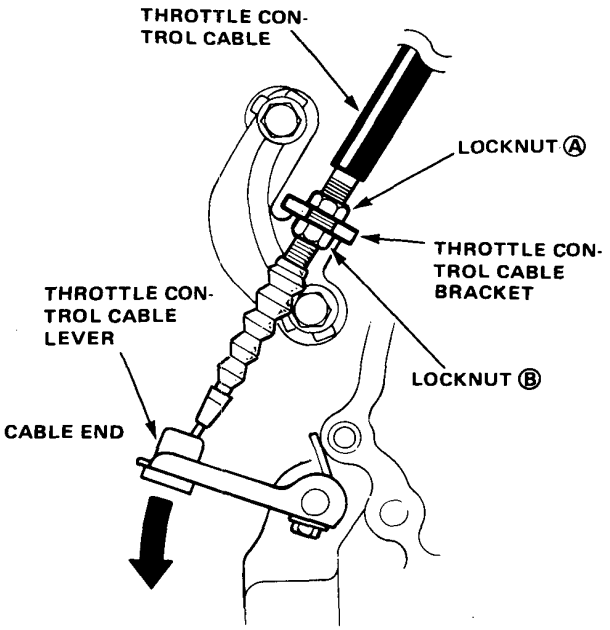

3. While pressing down on the throttle control lever, pull on the throttle link to check the amount of throttle control cable free play.

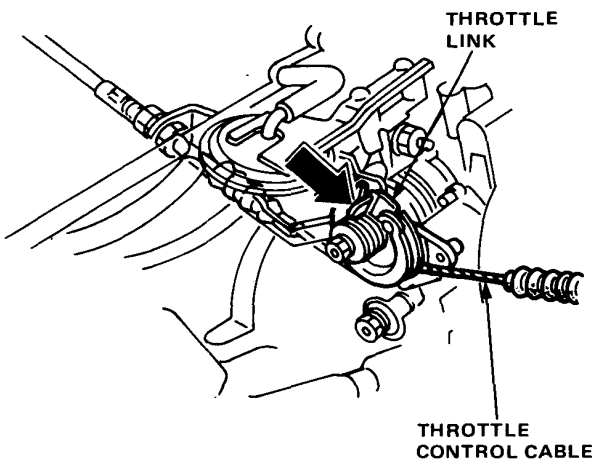

Remove all throttle control cable free play by gradually turning lock nut "A".

Until no movement can be felt in the throttle link, while continuing to press down on the throttle control lever, pull open the throttle link.
The control lever should begin to move at precisely the same time as the link.

NOTE: Correct "Fine Tune" adjustment of the throttle control cable is critical for proper operation of the transmission and lock-up torque convertor.

4. Check the following items before starting the engine:

   Depress the accelerator to the floor. While depressed check that there is play in the throttle control lever.

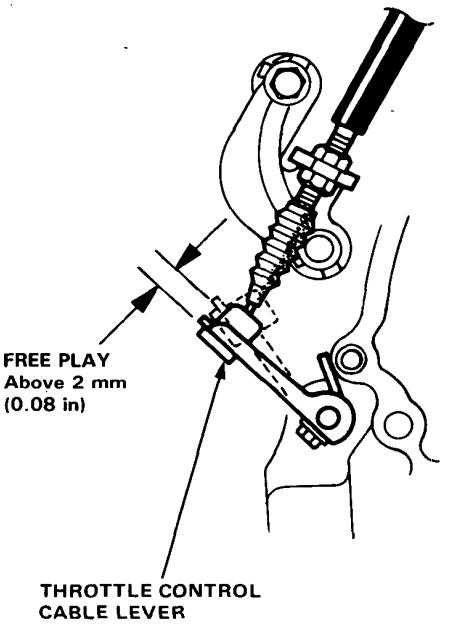

- Check that the cable moves freely by depressing the accelerator.

Removal

1. Disconnect the battery negative (−) and positive (+) cables from the battery.

2. Disconnect the starter motor and ground cables.

3. Drain ATF. Reinstall the drain plug and washer.

4. Remove the two 6 x 1.0 mm bolts located at the side of the battery base, and intake hose band of the throttle body.

5. Remove the air cleaner case complete with the intake hose (see Section 6).

6. Remove the speedometer gearbox without removing the power steering speed sensor hose.

7. Disconnect the control cable at the torque converter housing.

8. Disconnect the cooler hoses at the joint pipes. Turn the ends up to prevent ATF from flowing out.

   NOTE: Check for any signs of leak at the hose joints.

9. Disconnect the lock-up control solenoid valve wire connector, shift control solenoid valve wire connector, and automatic speed pulser wire connector.

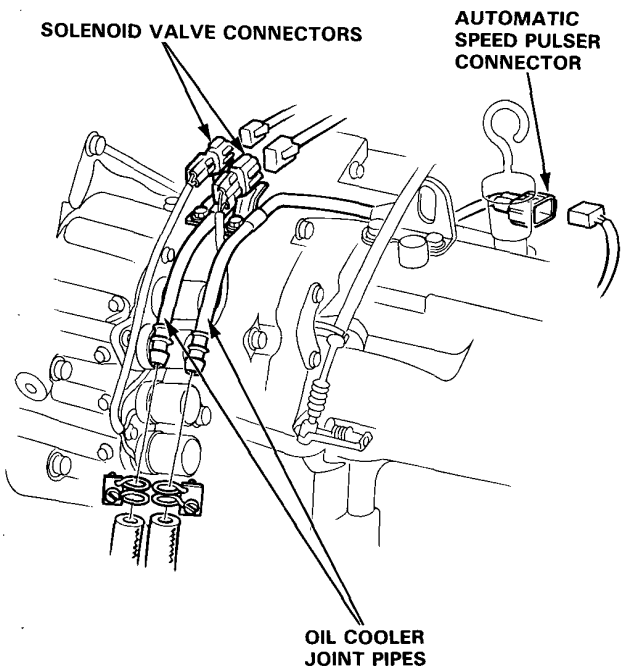

10. Remove the center console, pry off the adjuster pin, and disconnect the control cable.

11. Remove the control cable guide bolts, and pull the cable out of the cable.

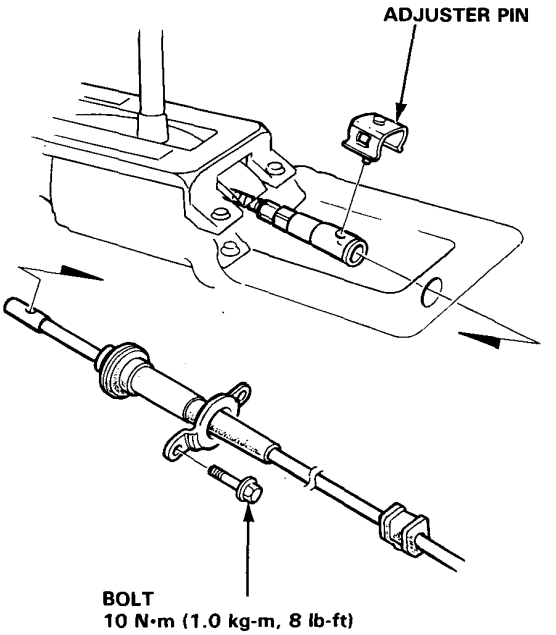

12. Remove the right and left axles, then remove the intermediate shaft.

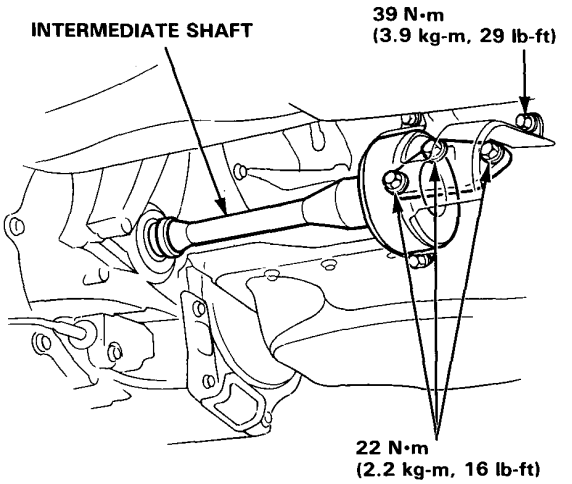

(cont'd)

Removal (cont'd)

13. Remove the torque converter case mounting bolts from the torque rod bracket.

    NOTE: Replace the bolts with new ones whenever loosened or removed.

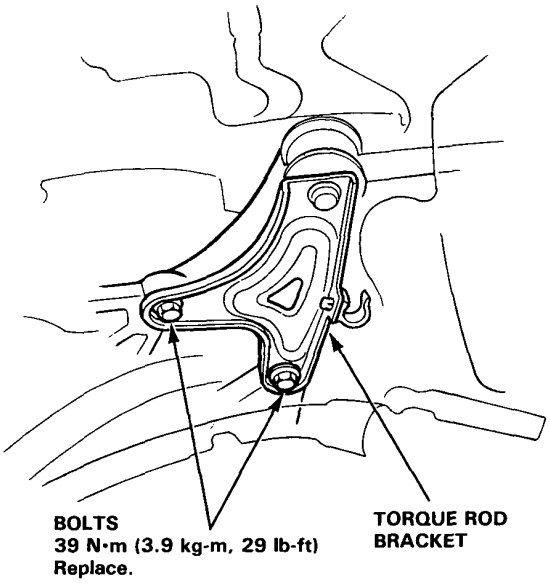

14. Place a jack under the transmission and raise the transmission just enough to take weight off the mounts.
15. Remove the center beam.
16. Attach a chain hoist with the two bolts, then raise the engine a slight amount to unload the mounts.
    NOTE: Be sure the hoist does not interfere with distributor high tension wires.

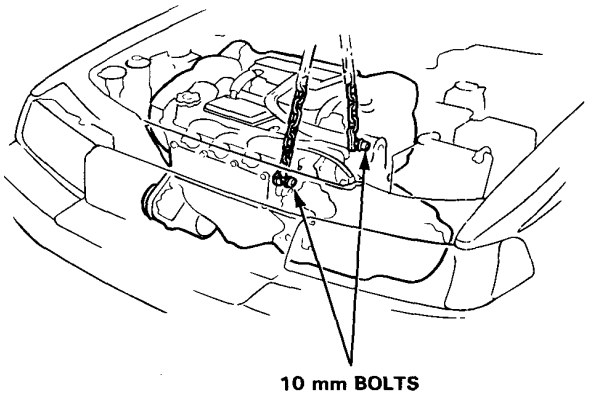

17. While holding the lock nut, remove the radius rod (See Section 7).
18. Remove the center stopper bracket from the transmission.
19. Remove the torque converter cover.

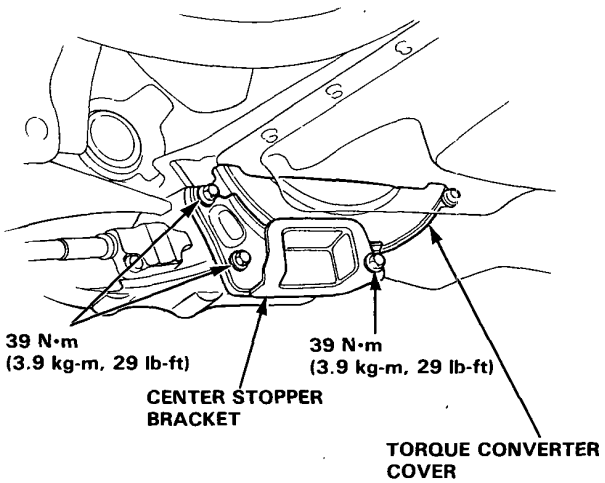

20. Remove the two rear engine mount bolts from the transmission.

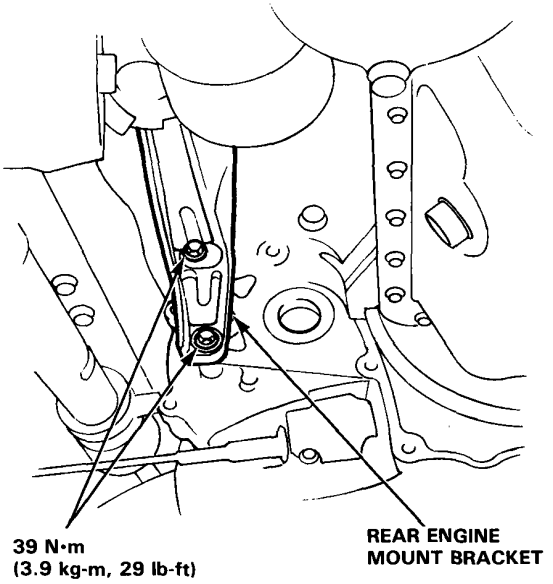

21. Remove the front engine mount bolts from the transmission.

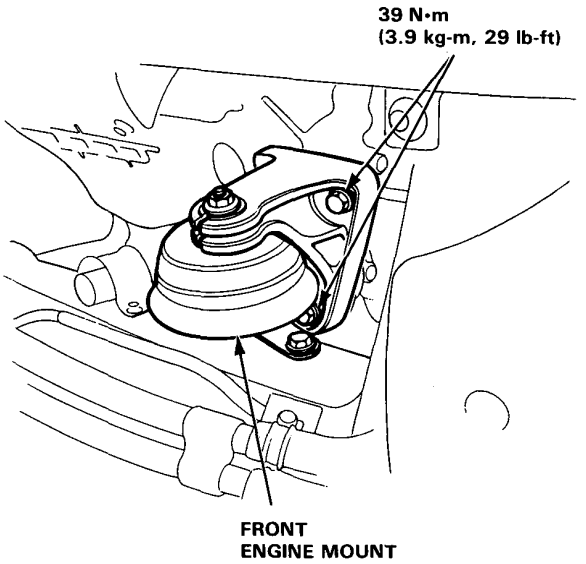

22. Remove the plug, then remove the drive plate bolts one at a time while rotating the crankshaft pulley.

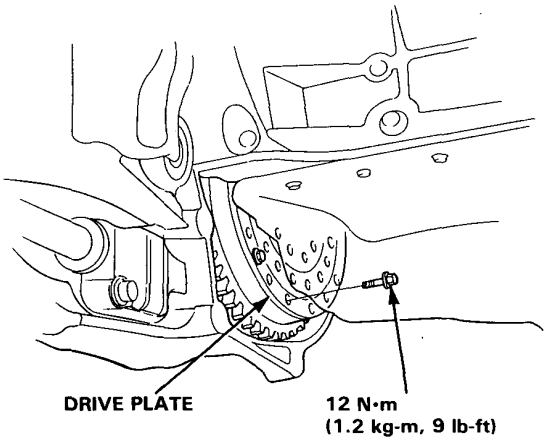

23. Remove the starter motor mount bolts and the starter motor.

24. Remove the remaining bolts attaching the transmission housing to the engine.

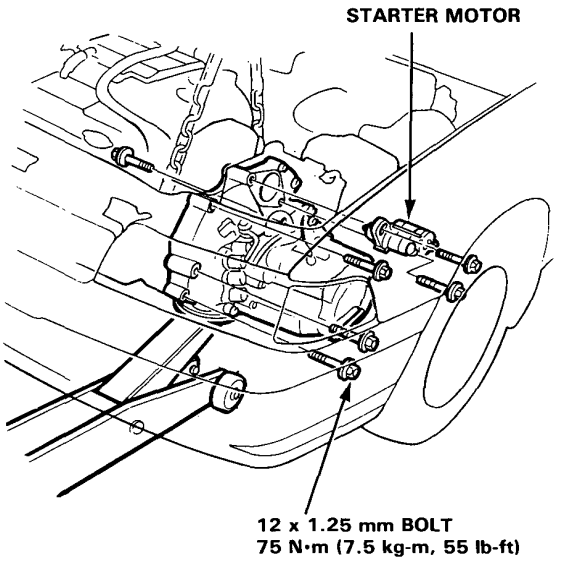

Installation

1. Place the transmission on the transmission jack and raise to the engine level.

2. Secure the transmission to the engine with the mounting bolts.

3. Install the starter.

4. Attach the torque converter to the drive plate with mounting bolts, and torque to 12 N•m (1.2 kg-m, 9 lb-ft). Rotate the crank as necessary to tighten bolts to 1/2 torque, then final torque, in a crisscross pattern. Check for free rotation after tightening the last bolt.

5. Install the front engine mount bolts and torque to 39 N•m (3.9 kg-m, 29 lb-ft).

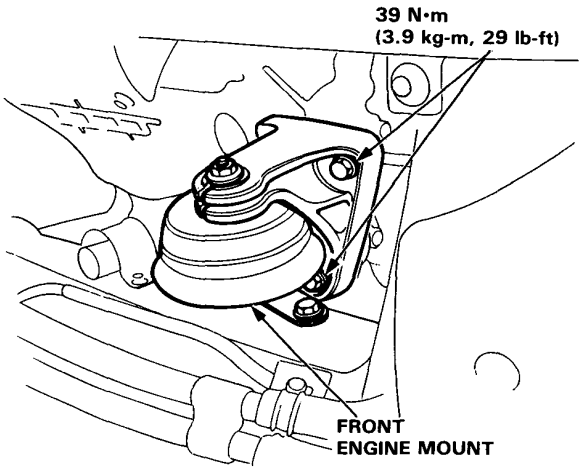

6. Install the transmission to the rear engine mount bracket with two bolts.

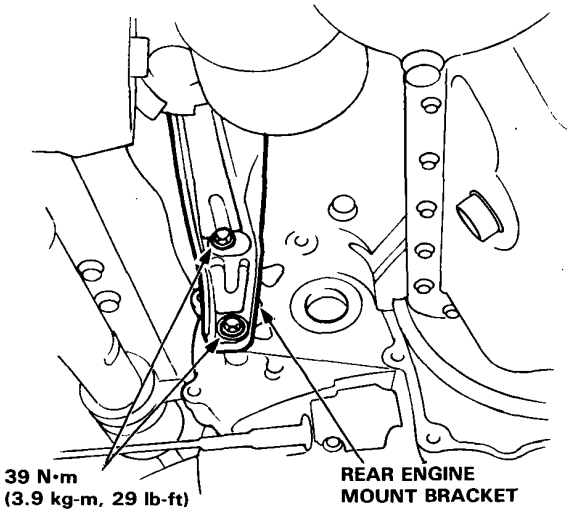

7. Install the torque converter cover.

8. Install the center stopper bracket to the transmission.

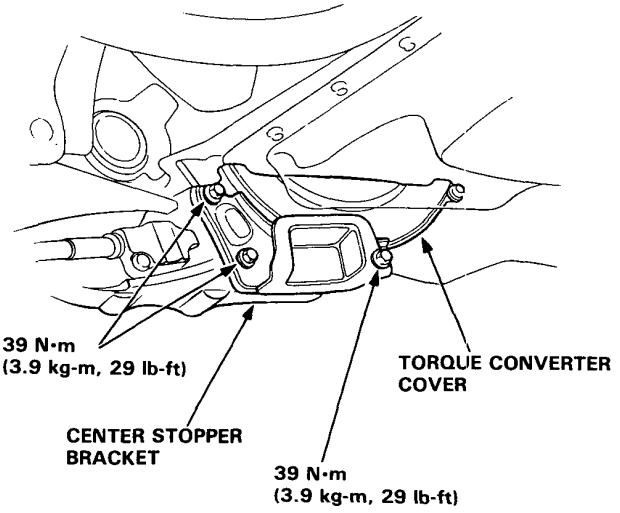

9. Install the torque rod bracket and torque the bolts to 39 N·m (3.9 kg-m, 29 lb-ft).

   NOTE: Replace the bolts with new ones whenever loosened or removed.

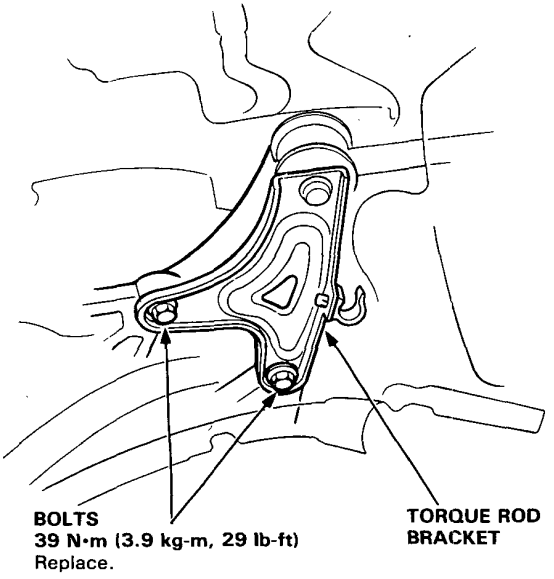

10. Remove the transmission jack.

11. Remove the chain hoist by removing the two 10 mm bolts.

12. Connect the intermediate shaft. Install the right and left axles.

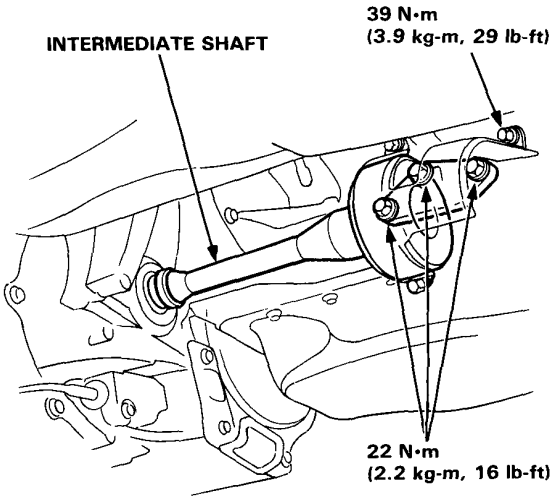

13. Install the center beam.

14. Connect the radius rod.

15. Route the control cable to the center console through the cable guide and secure with the bolt.

16. Connect the control cable with the adjuster pin, and reinstall the center console.

17. Connect the lockup control solenoid valve wire connectors.

18. Connect the cooler hoses to the joint pipes.

19. Connect the control cable on the throttle body side.

20. Install the speedometer gearbox.

21. Install the air cleaner case and intake hose.

22. Install the two 6 x 1.0 mm bolts located at the side of the battery base, and retighten the intake hose band of the throttle body.

23. Refill the transmission with ATF.

24. Connect the starter and ground cables.

25. Connect the battery positive (+) and negative (−) cables to the battery.

26. Start the engine, set the parking brake, and shift the transmission through all gears three times. Check for proper control cable adjustment.

27. Let the engine reach operating temperature with the transmission in Neutral or Park, then turn it off and check the fluid level.

28. Road test as described on page 9-32.

Special Tools

Ref. No.	Tool Number	Description	Q'ty	Remarks
①	07749–0010000	Driver	1	
②	07746–0040900	Pilot, 40 mm	1	
③	07965–SD90100	Support Base	1	
④	07746–0010400	Attachment 52 x 55 mm	1	
⑤	07746–0010500	Attachment 62 x 68 mm	1	
⑥	07947–6340201	Driver Attachment	1	
⑦	07965–SD90200	Support Collar	1	
⑧	07947–SD90200	Oil Seal Driver	1	

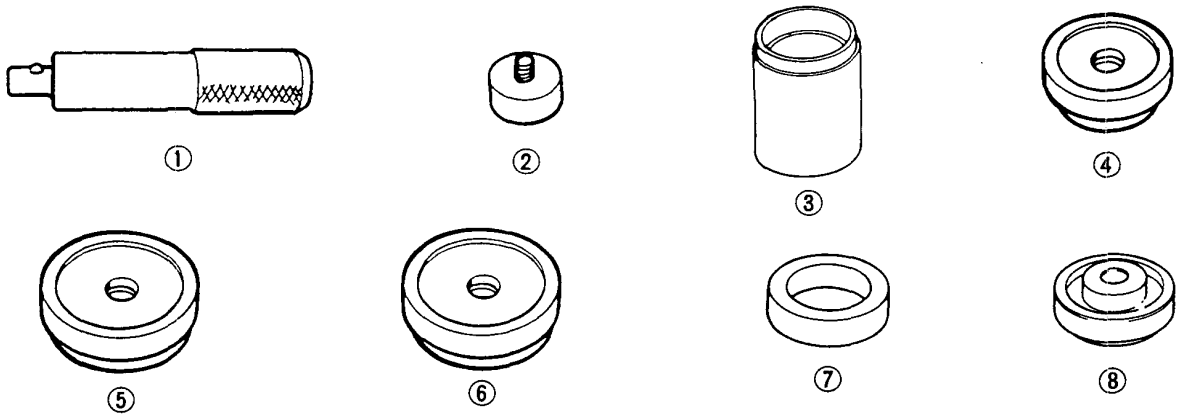

Removal

1. Loosen the front wheel lug nuts.

2. Raise the front end of the car and place safety stands in the proper locations. Remove the front wheels.

3. Drain the transmission oil.

   NOTE: It is not necessary to drain the transmission oil when the left driveshaft is removed.

4. Raise the locking tab on the spindle nut and remove it with a 36 mm(1-7/16 in.) socket wrench.

5. Remove the damper fork bolt and damper pinch bolt. Remove the damper fork.

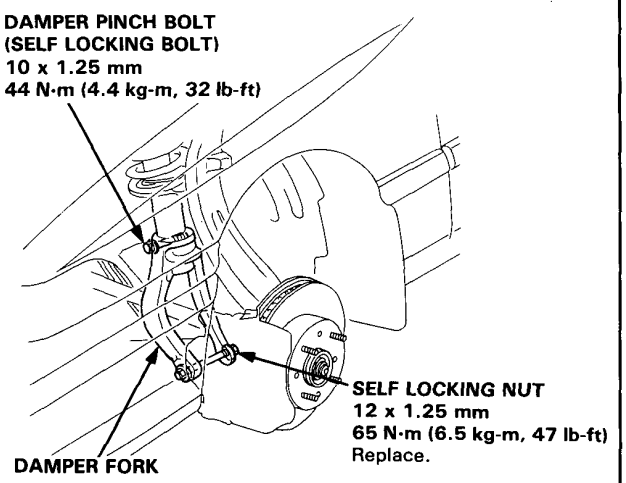

6. Remove the knuckle-to-lower arm castle nut, and separate the lower arm from the knuckle using a commercially available bearing puller.

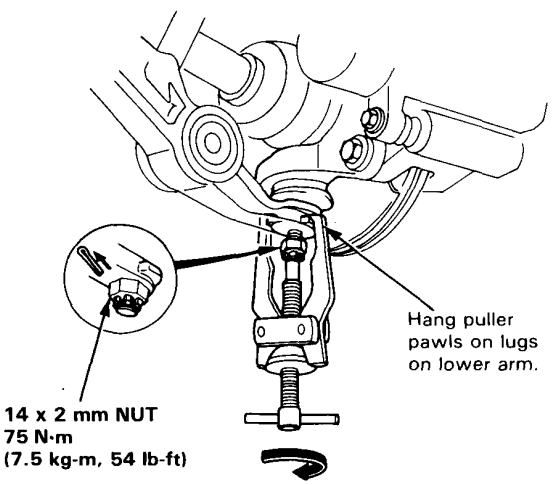

7. Pull the knuckle outward and remove the driveshaft outboard joint from the knuckle using a plastic hammer.

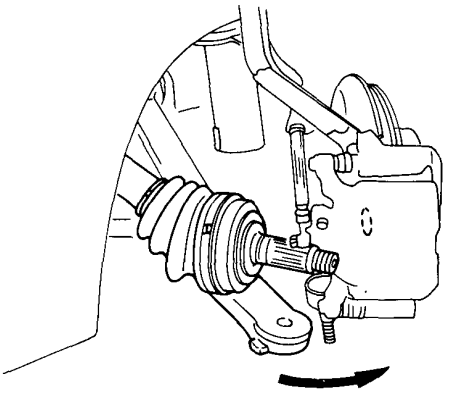

8. Pry the driveshaft assembly with a screwdriver as shown to force the set ring at the driveshaft end past the groove.

9. Pull the inboard joint and remove the driveshaft and CV joint out of the differential case as an assembly.

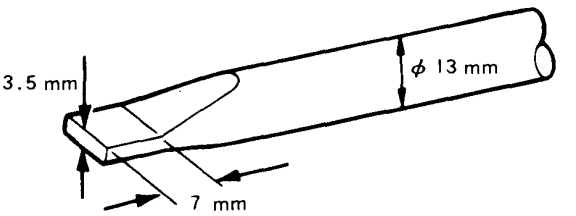

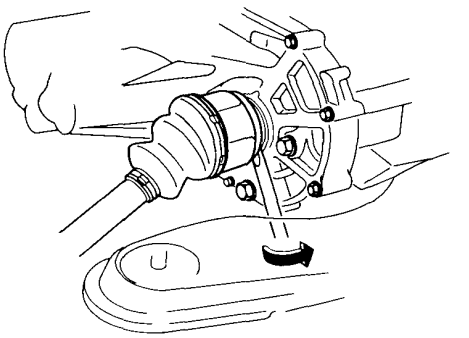

CAUTION:

- **Do not pull on the driveshaft, as the CV joint may come apart.**
- **Use care when prying out the assembly and pull it straight to avoid damaging the differential oil seal or intermediate shaft dust seal.**

Disassembly/Inspection

NOTE:
- Mark the rollers and roller grooves during disassembly to ensure proper positioning during reassembly.
- Before disassembly, mark the spider and driveshaft so they can be reinstalled in their original positions.
- The inboard joint must be removed to replace the boots.

GREASE Thoroughly pack the inboard joint and both joint boots with high quality molybdenum disulfide grease when reassembling.

Grease Quantity:

Inboard Joint: 100—110 g
Outboard Joint: 130—140 g

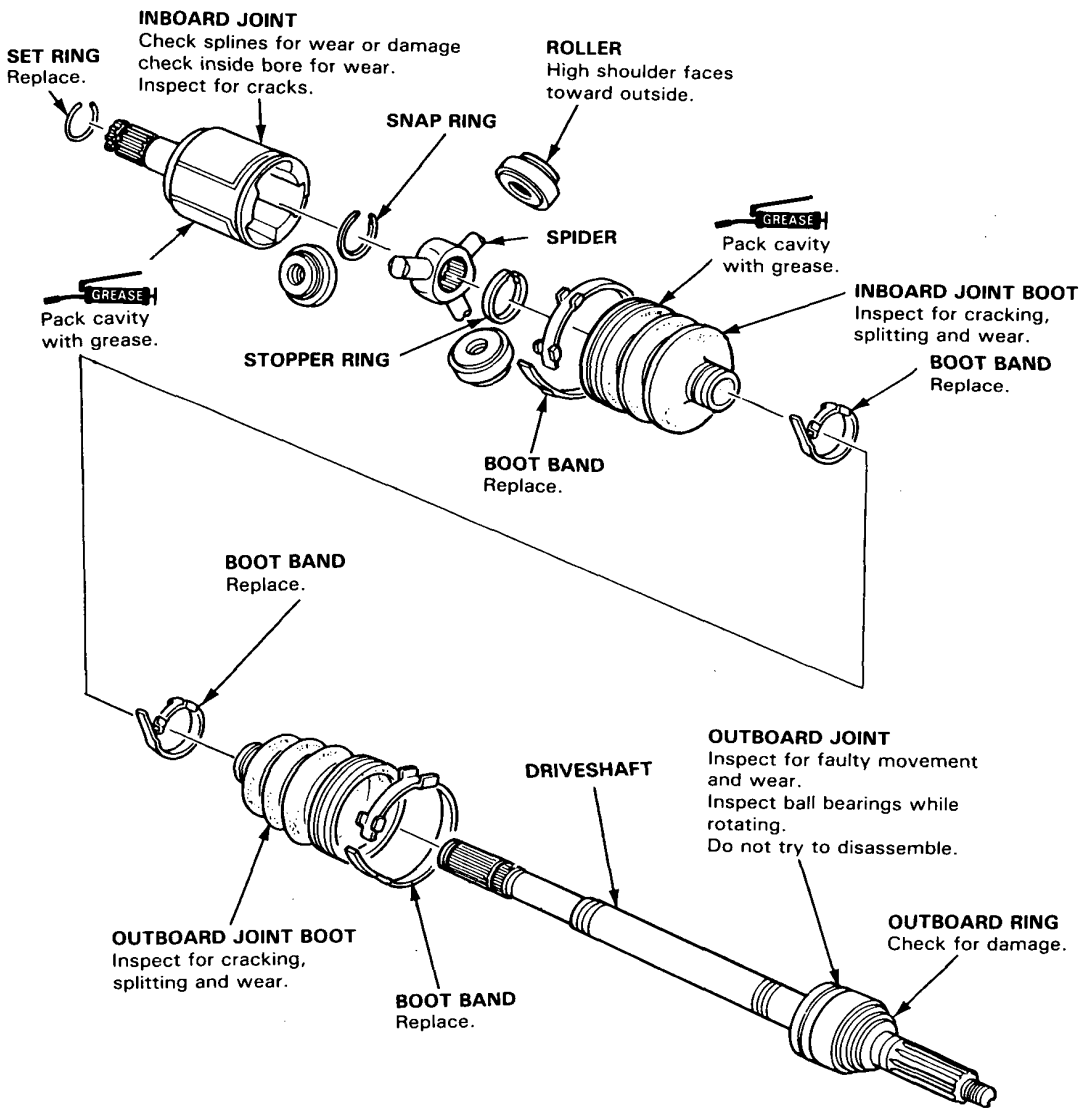

Reassembly

1. Wrap the spline with vinyl tape to prevent damage to the boots.

2. Install the outboard and inboard boots on the driveshaft, then remove the vinyl tape.

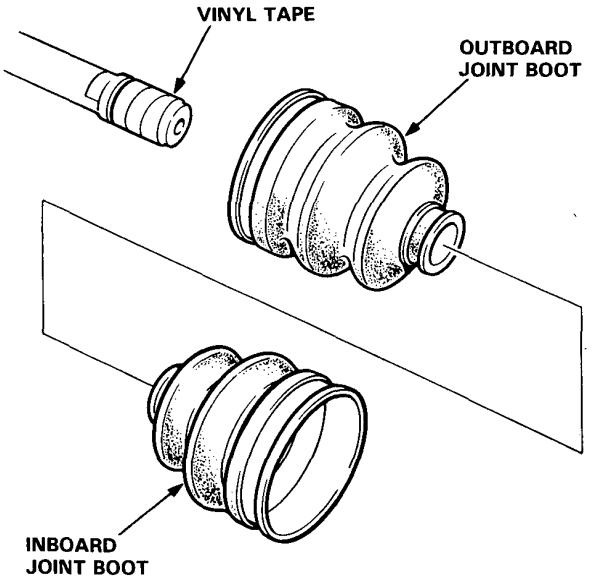

3. Install the stopper ring onto the driveshaft groove.

4. Install the spider on the driveshaft by aligning the marks to install it in original position.

5. Fit the snap ring into the driveshaft groove.

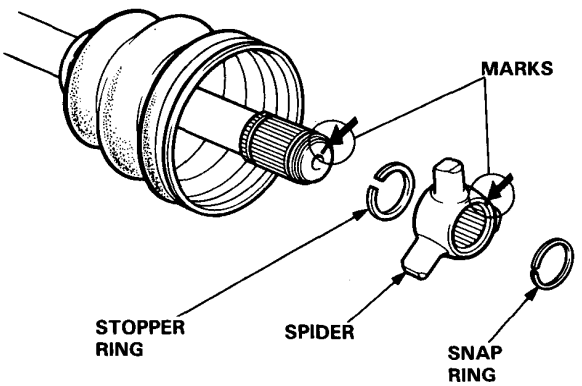

6. Pack the outboard joint boot with high quality molybdenum disulfide grease.

   Grease Quantity: 130—140 g

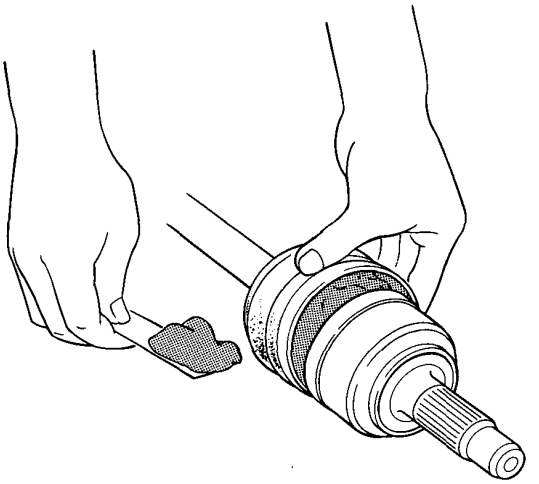

7. Fit the rollers to the spider with their high shoulders facing outward.

   CAUTION: Reinstall the rollers in their original positions on the spider.

8. Pack the inboard joint and boot with molybdenum disulfied grease.

   Grease Quantity: 100—110 g

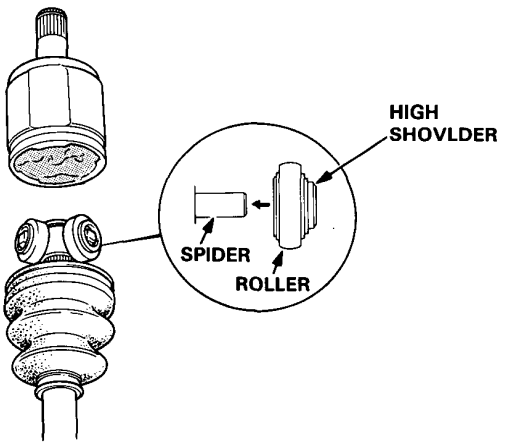

9. Fit the inboard joint onto the driveshaft.

   CAUTION: Hold the driveshaft assembly so the inboard joint points up, to prevent it from falling off.

(cont'd)

Reassembly (cont'd)

10. Adjust the length of the driveshafts to the figure below.

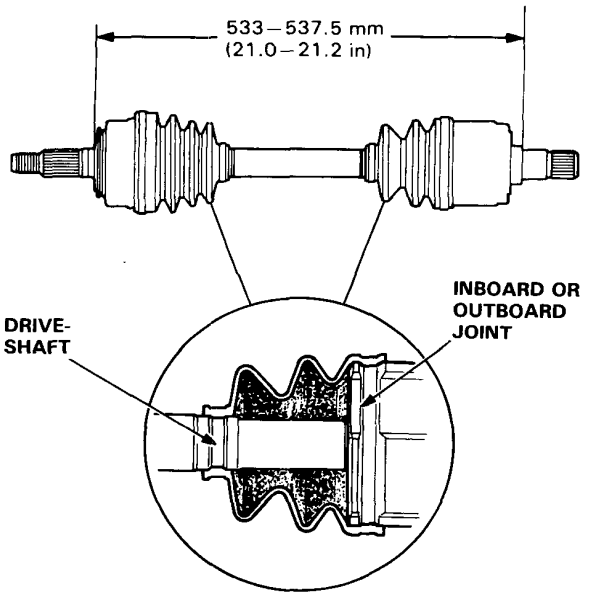

NOTE: Fit the boots as shown.

11. Install new boot bands on the boot and bend both sets of locking tabs.

12. Lightly tap on the doubled-over portions to reduce their height.

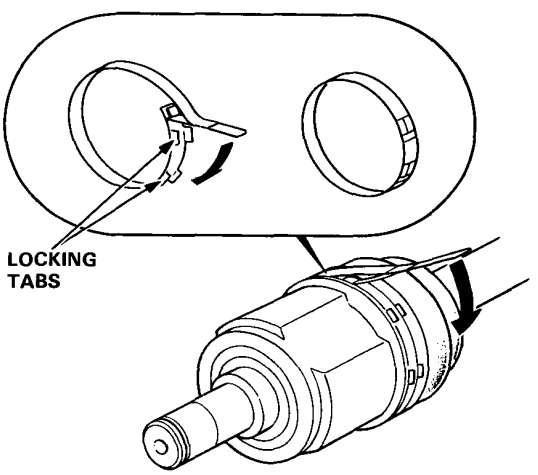

13. Install a new set ring in the driveshaft groove.

14. Install the inboard end of the driveshaft into the differential.

CAUTION:
- **Always use a new set ring whenever the driveshaft is being installed.**
- **Make sure the driveshaft locks in the differential side gear groove, and the CV joint subaxle bottoms in the differential or intermediate shaft.**

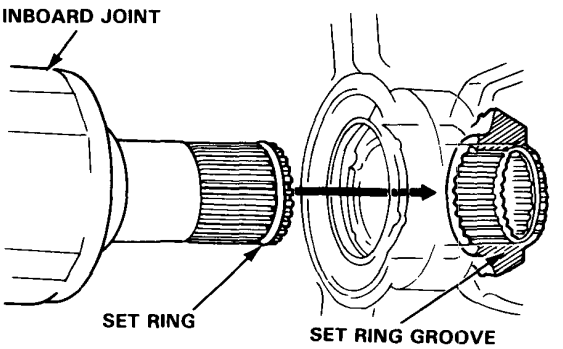

15. Refill the transmission.

Intermediate Shaft

Removal

1. Drain oil from the transmission.

2. Remove the three 8 mm bolts and one 10 mm bolt.

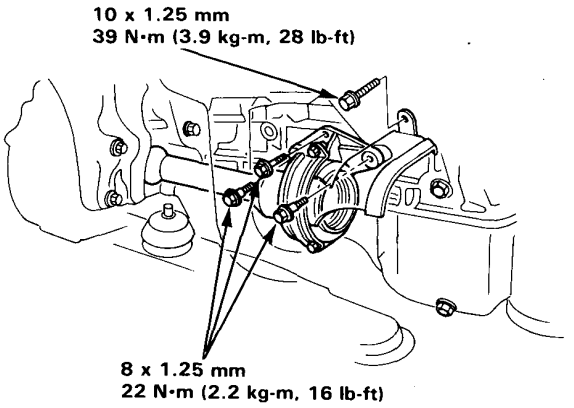

3. Lower the bearing support close to the steering gearbox and remove the intermediate shaft from the differential.

   CAUTION: To prevent damage to the differential oil seal, hold the intermediate shaft horizontal until it is clear of the differential.

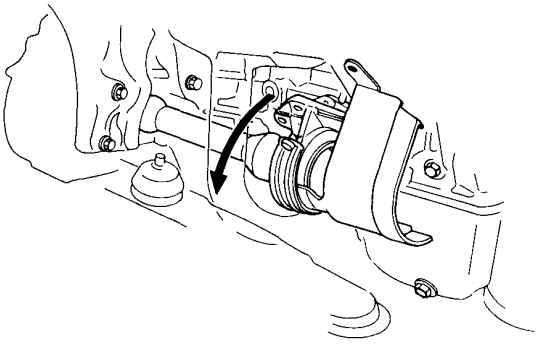

Disassembly

1. Remove the heat shield from the bearing support.

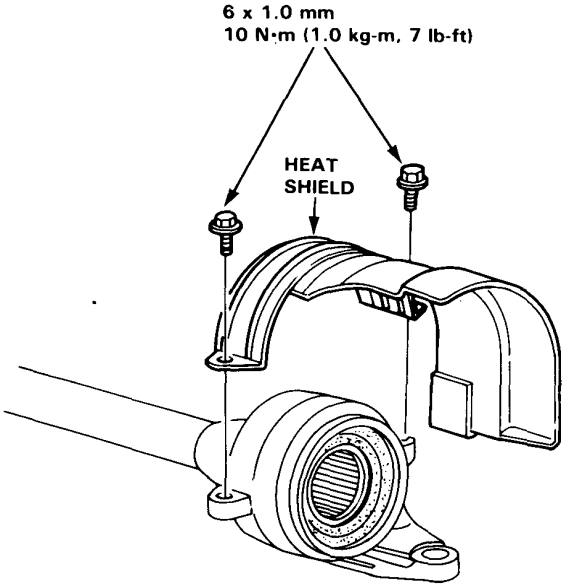

2. Remove the intermediate shaft outer seal.

3. Remove the 40 mm external circlip.

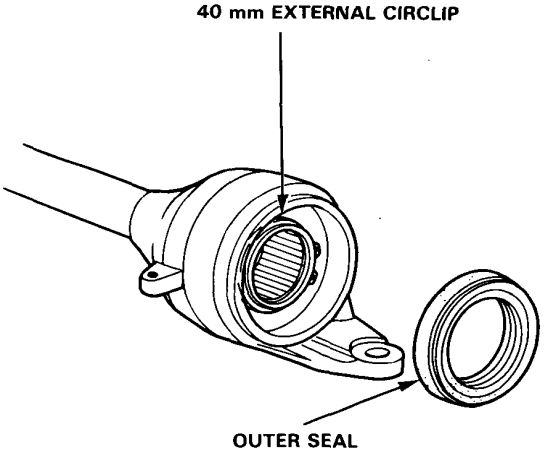

(cont'd)

Intermediate Shaft

Removal

1. Drain oil from the transmission.

2. Remove the three 8 mm bolts and one 10 mm bolt.

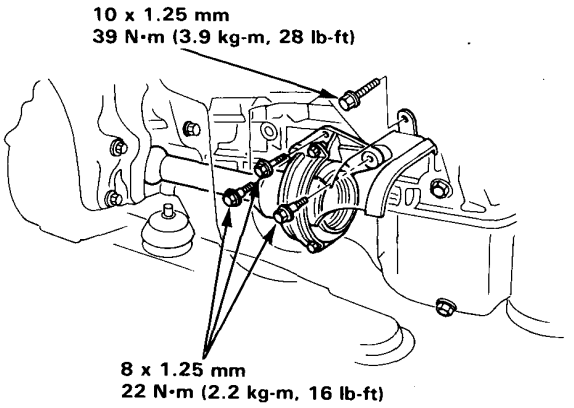

3. Lower the bearing support close to the steering gearbox and remove the intermediate shaft from the differential.

   CAUTION: To prevent damage to the differential oil seal, hold the intermediate shaft horizontal until it is clear of the differential.

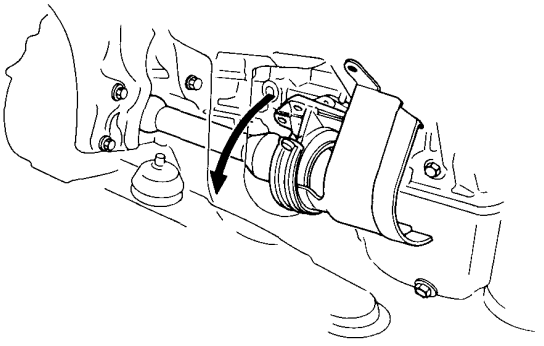

Disassembly

1. Remove the heat shield from the bearing support.

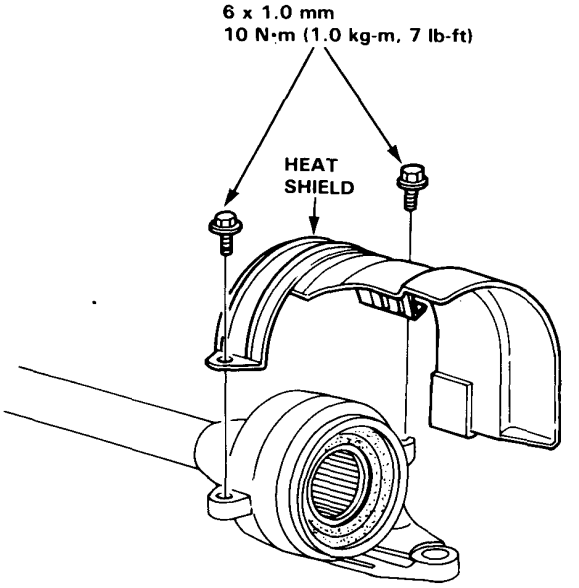

2. Remove the intermediate shaft outer seal.

3. Remove the 40 mm external circlip.

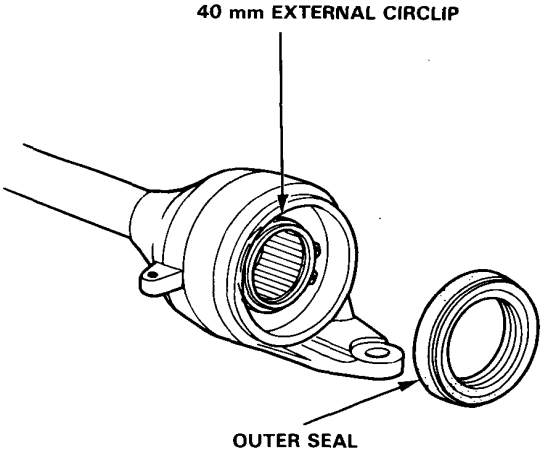

(cont'd)

Disassembly (cont'd)

4. Press the intermediate shaft out of the shaft bearing.

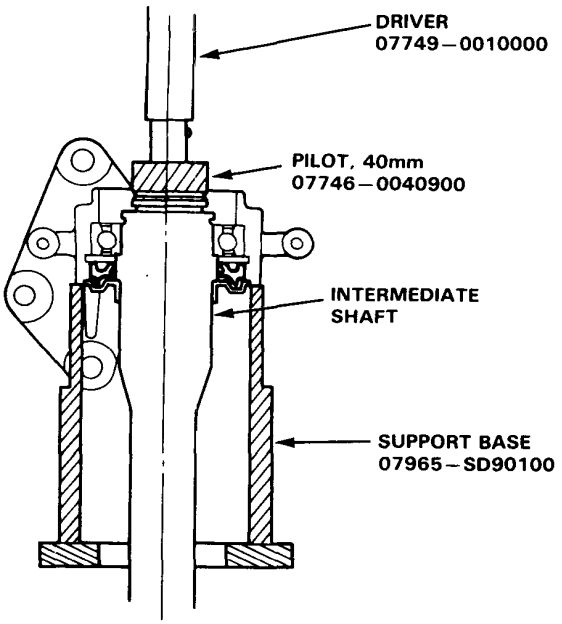

5. Remove the intermediate shaft inner seal.

6. Remove the 68 mm internal circlip.

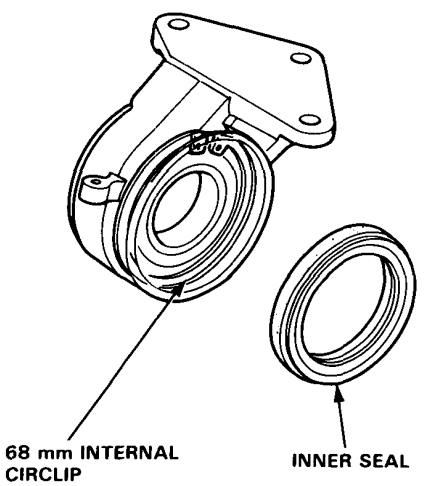

7. Press the intermediate shaft bearing out of the bearing support.

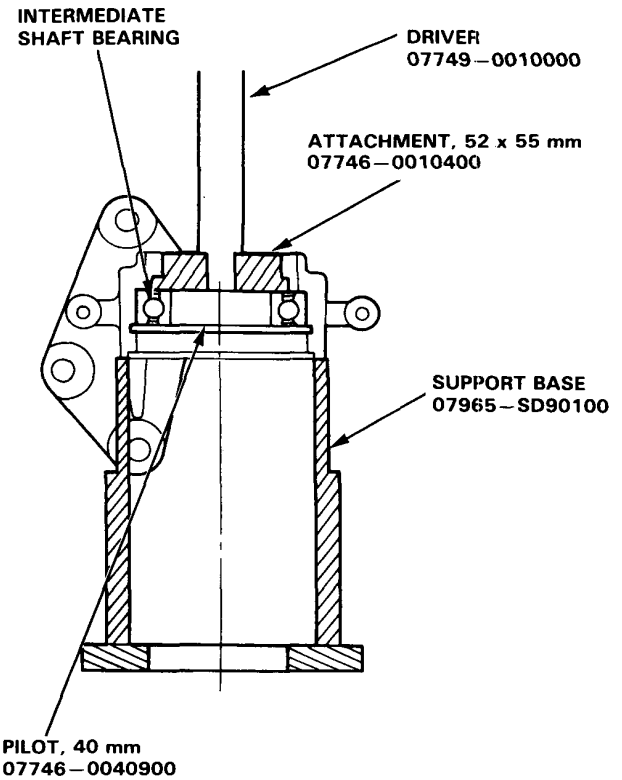

Inspection

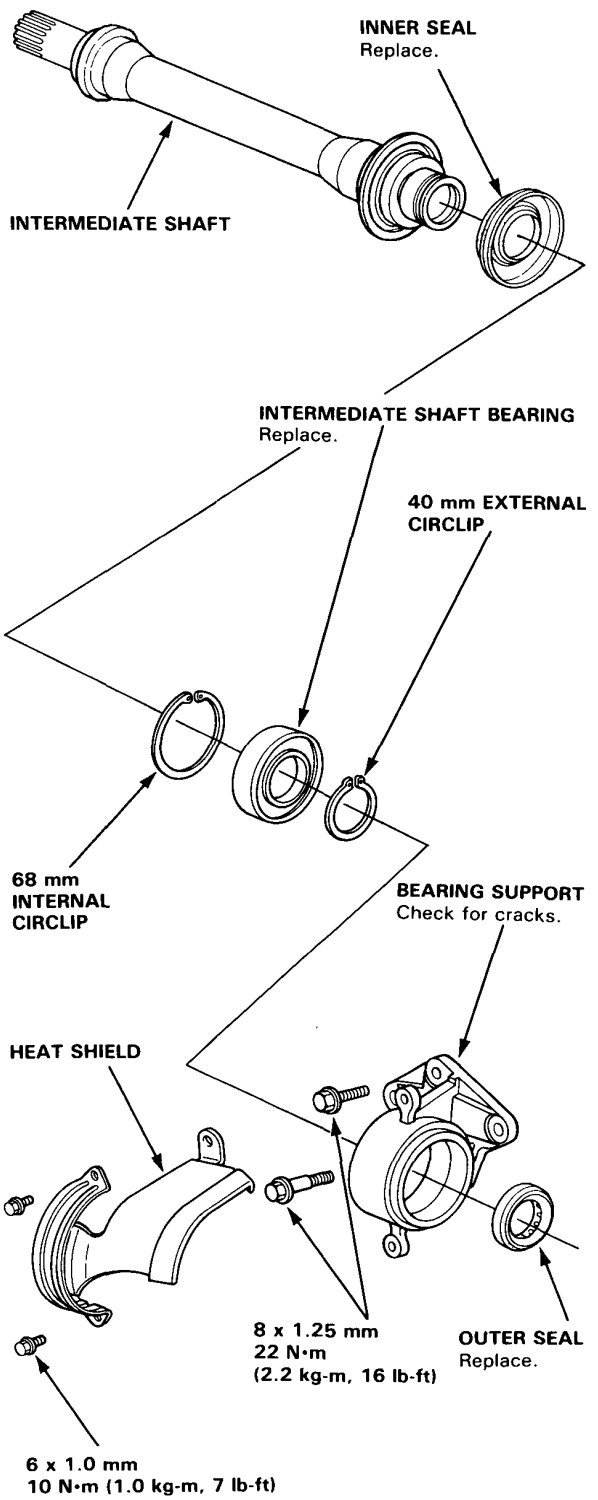

Reassembly

1. Press the intermediate shaft bearing into the bearing support.

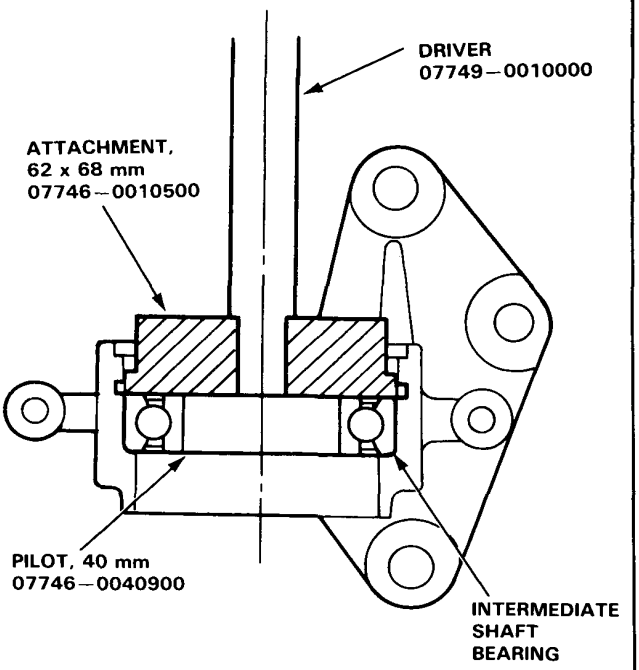

2. Seat the 68 mm circlip in the groove of the bearing support.

   CAUTION: Install the circlip with the tapered end facing out.

3. Press the intermediate shaft inner seal into the bearing support.

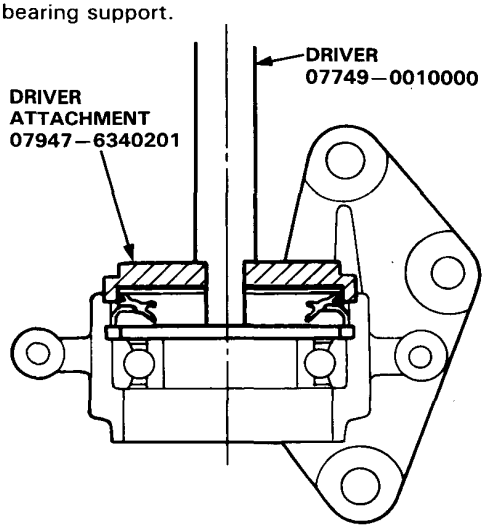

(cont'd)

Inspection

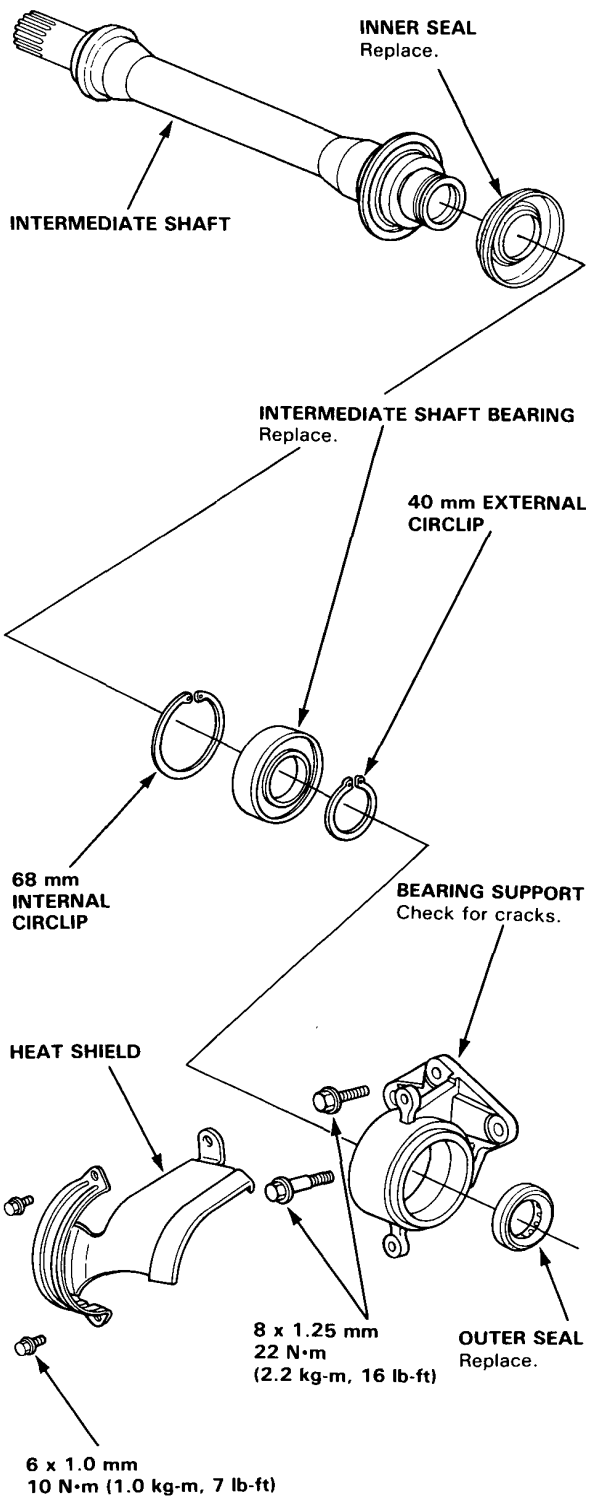

Reassembly

1. Press the intermediate shaft bearing into the bearing support.

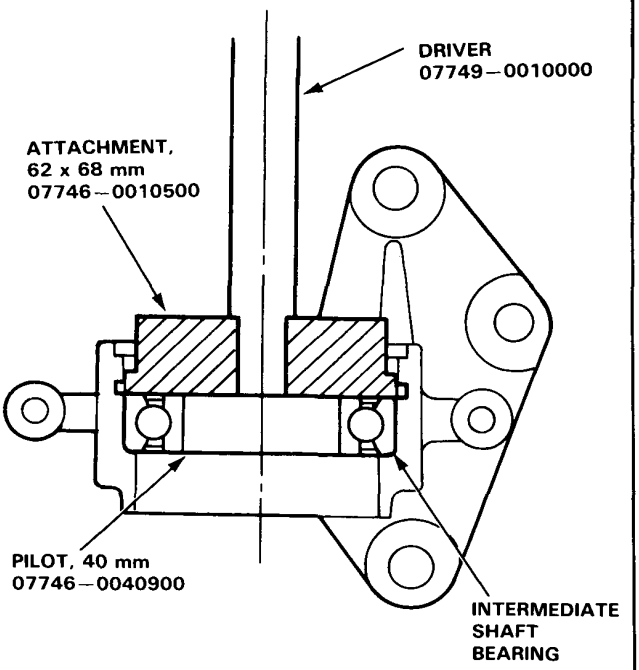

2. Seat the 68 mm circlip in the groove of the bearing support.

   CAUTION: Install the circlip with the tapered end facing out.

3. Press the intermediate shaft inner seal into the bearing support.

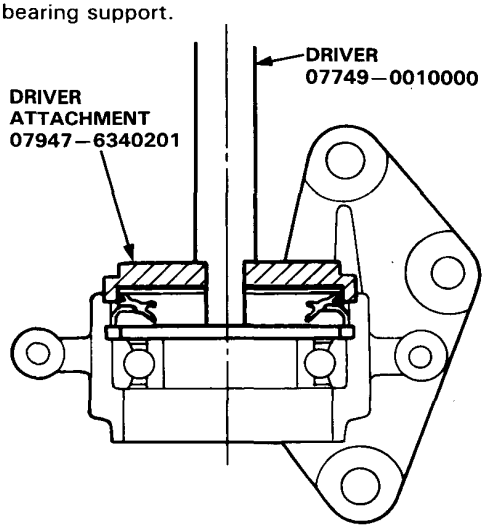

(cont'd)

Reassembly (cont'd)

4. Press the intermediate shaft into the shaft bearing.

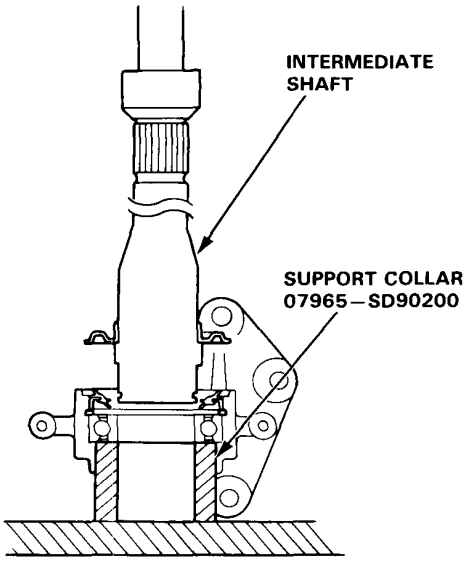

5. Seat the 40 mm external circlip in the groove of the intermediate shaft.

   CAUTION: Install the circlip with the tapered end facing out.

6. Press the outer seal into the bearing support.

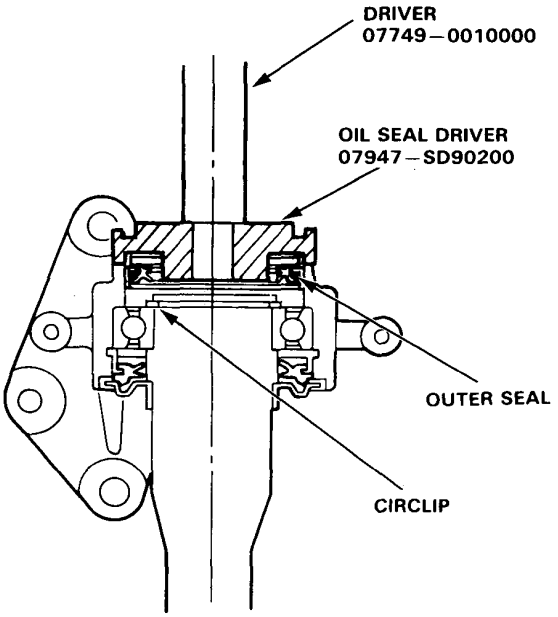

7. Install the heat shield on the bearing support.

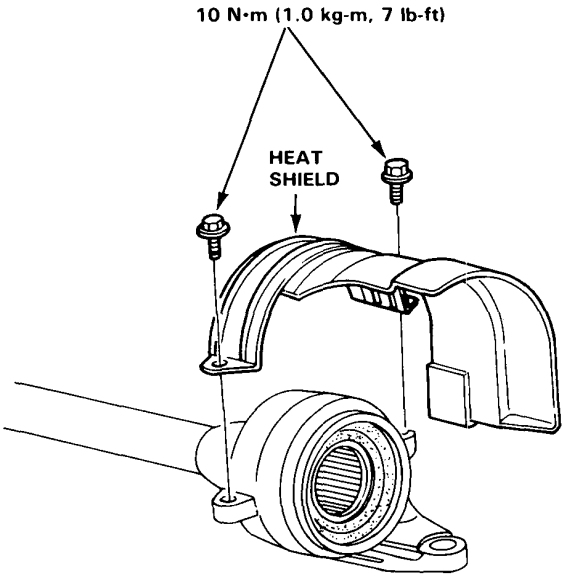

8. Install the intermediate shaft into the differencial to prevent damage the differencial oil seal.

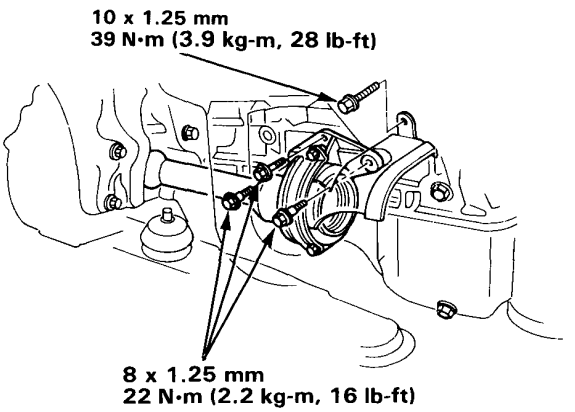

Special Tools

Ref. No.	Tool Number	Description	Q'ty	Remarks
①	07406–0010101	Bypass Tube Joint	1	
②	07916–SA50001	40 mm Locknut Wrench	1	
③	07406–0010200	P/S Pressure Gauge Assembly	1	
③-1	07406–0010300	Pressure Control Valve	1	
③-2	07406–0010400	Pressure Gauge	1	
④	07GAK–SE00100	P/S Joint Adapter Kit	1	
④-1	07GAK–SE00110	P/S Joint Adapter (Pump)	1	
④-2	07GAK–SE00120	P/S Joint Adapter (Hose)	1	
⑤	07953–7190000	Collar Driver	1	
⑥	07941–6920003	Ball Joint Remover	1	
⑦	07749–0010000	Driver	1	
⑧	07746–0010300	Attachment 42 x 47 mm	1	
⑨	07947–6340300	Driver Attachment	1	
⑩	07GAG–SD40000	P/S Tool Kit	1	
⑩-1	07GAG–SD40100	Piston Seal Ring Guide	1	
⑩-2	07GAG–SD40200	Piston Seal Sizing Tool	1	
⑩-3	07GAG–SD40300	Cylinder End Seal Slider	1	
⑩-4	07GAG–SD40400	End Seal Guide	1	
⑩-5	07GAG–SD40600	P/S Tool Kit Case	1	
⑪	07974–SA50600	Pinion Seal Guide	1	
⑫	07725–0030000 or 07725–0010101	Universal Holder		
⑬	07974–SA50800	Ball Joint Boot Clip Installation Guide	1	
⑭	07944–6110200	8 mm Pin Driver		

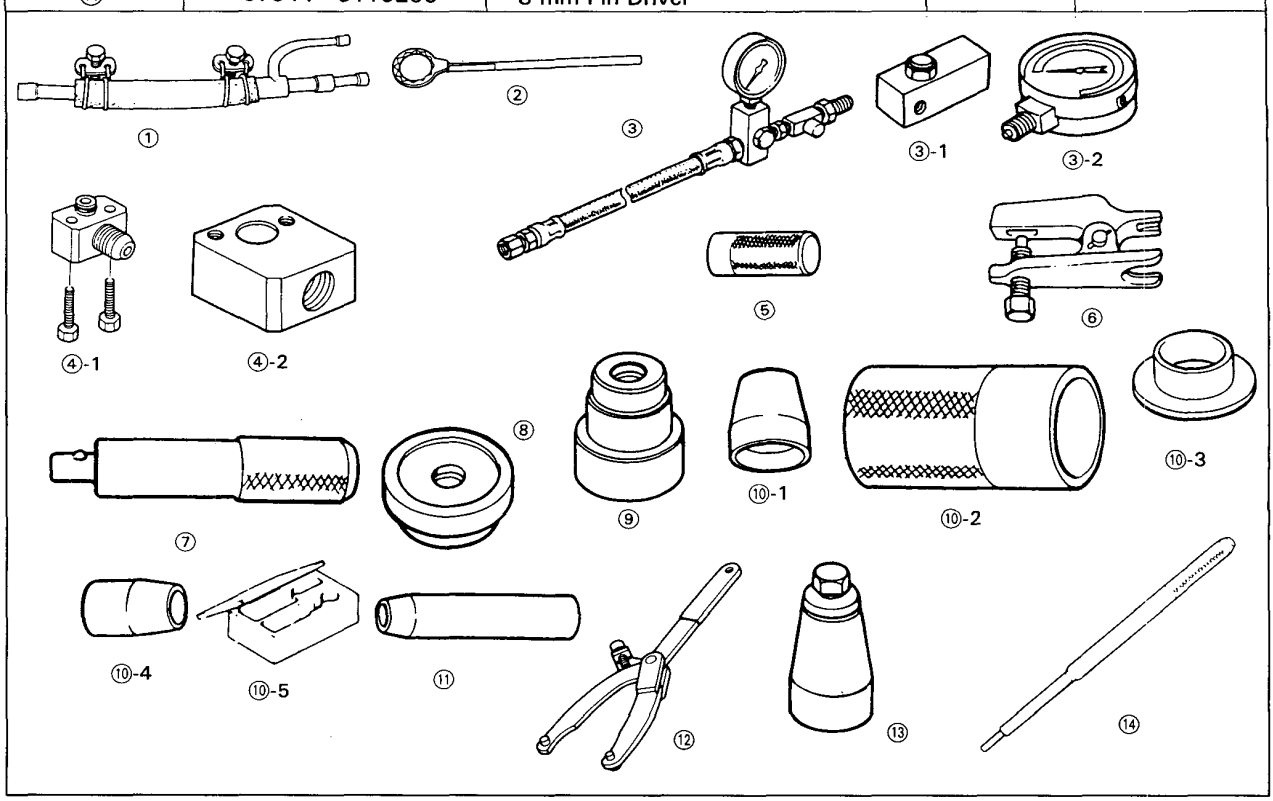

Index

PUMP
Pump Belt Adjustment, page 11-9
Pump Pressure Check, page 11-10
Inspection, page 11-16
Pump Replacement, page 11-17
Control Valve Inspection and Replacement, page 11-18
Housing Disassembly, page 11-21
Housing Reassembly, page 11-22

GEAR BOX
Index/inspection, page 11-24
Removal, page 11-32
Overhoul, page 11-34
Installation, page 11-47

COLUMN
Removal/Installation, pagae 11-13

STEERING WHEEL
Disassembly/Reassembly, page 11-14

PRESSURE SWITCH

RESERVOIR
Fluid Replacement, page 11-9

SPEED SENSOR
Replacement, page 11-12

VALVE BODY UNIT
Disassembly, page 11-25
Assembly, page 11-29

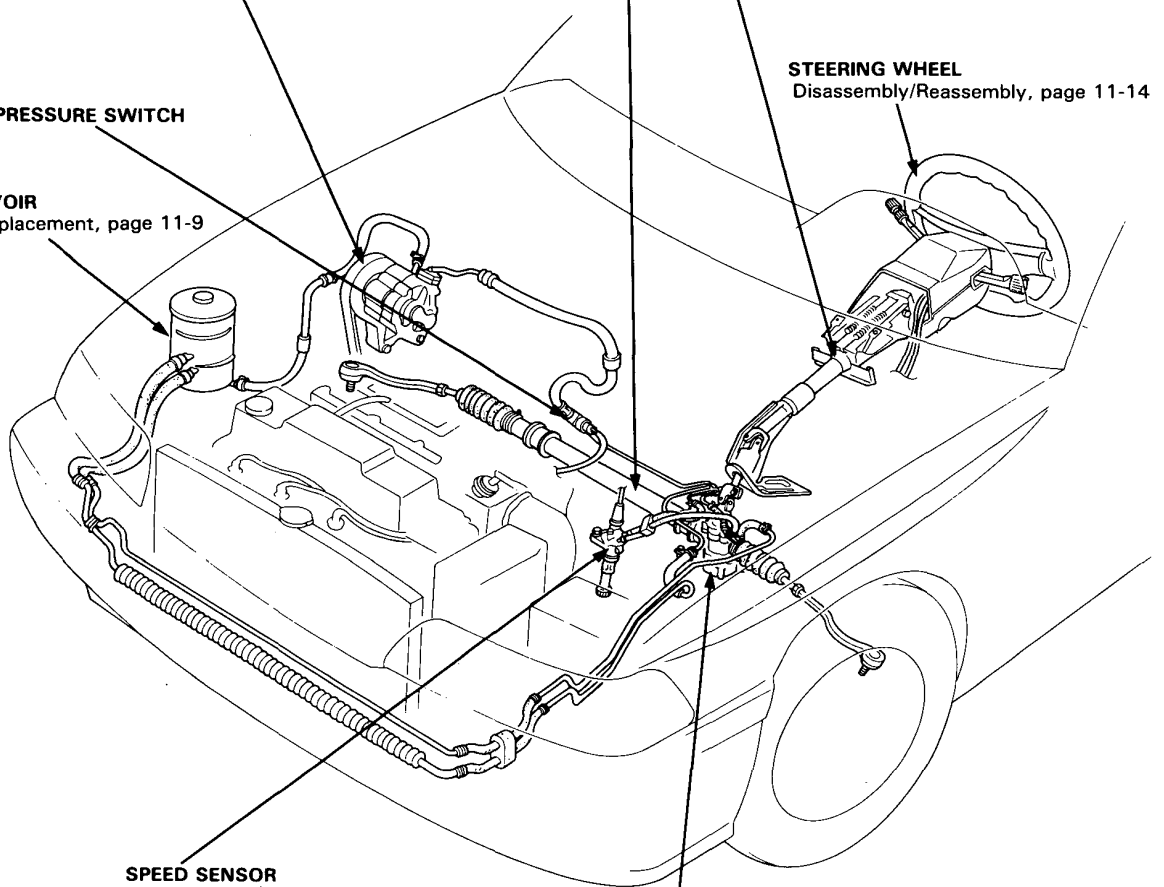

Troubleshooting

General

Check the following before you begin:

- Has the suspension been modified in a way that would affect steering?
- Are tire sizes and air pressure correct?
- Is the steering wheel original equipment or equivalent?
- Is the power steering pump belt properly adjusted?
- Is steering fluid reservoir filled to proper level?
- Is the engine idle speed correct and steady?

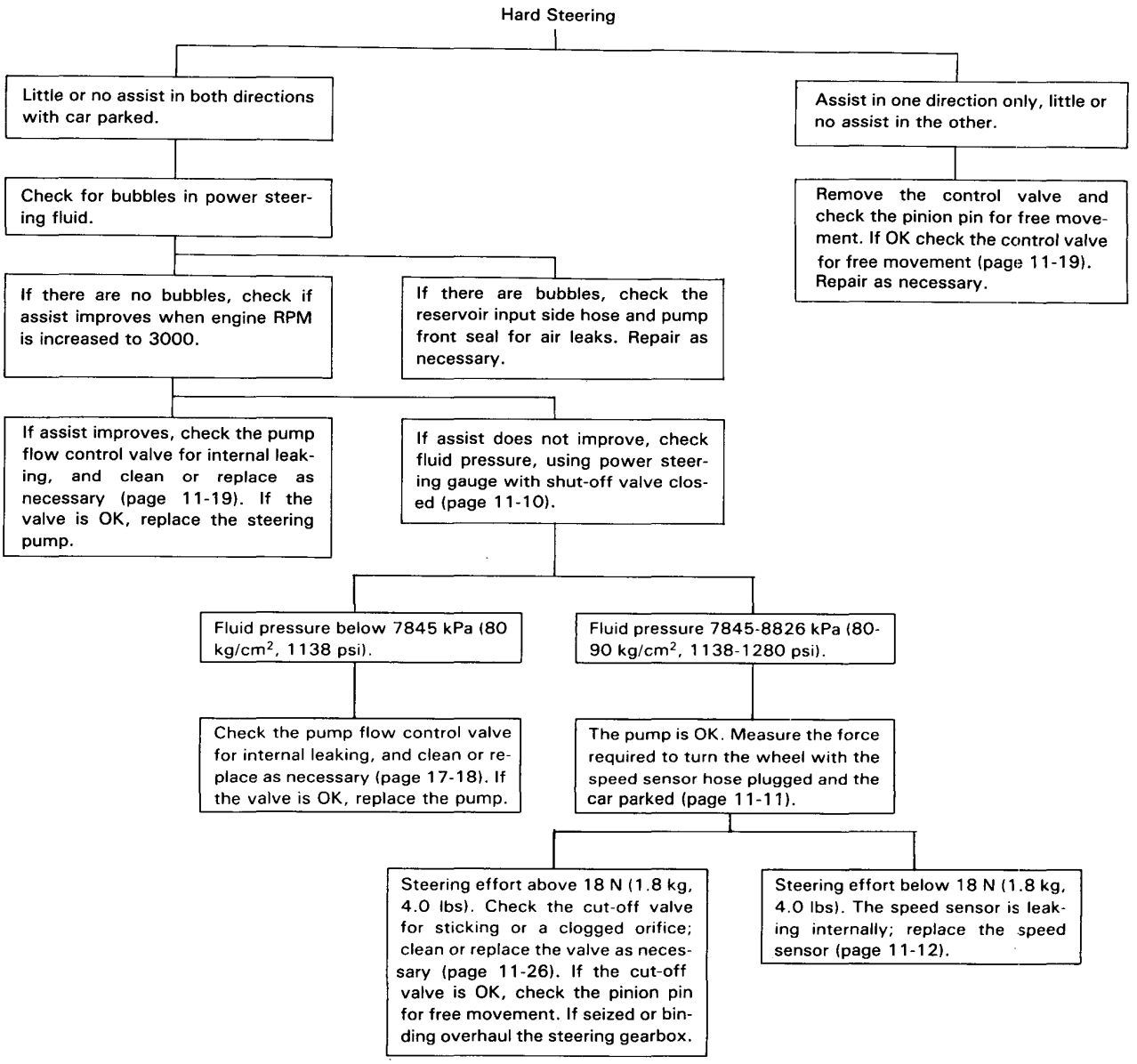

Uneven or rough steering.

- Belt slipping on pulley.
  - Adjust belt tension. Replace belt, if necessary (page 11-9).
- Cut-off valve sticking or leaking.
  - Check cut-off valve; clean or replace the cut-off valve or control unit .
- Idle speed low or erratic.
  - If the engine stalls when wheel is turned while car is stopped or moving at low speed, adjust carburetor idle speed (see Fuel Section).
  - Check power steering pump preload (page 11-17).
    If preload is above 4 N•m (0.4 kg-m, 3 lb-ft), the pump is probably damaged internally; clean, repair, or replace as necessary (page 11-18).
- Air bubbles visible in reservoir fluid.
  - Check fluid level.
    If low, check for leaks.
    Add fluid to proper level (page 11-9).
  - If fluid level is OK, check O-rings and seals on both ends of the pump inlet hose, and the oil pump housing mating surfaces for suction leaks. Replace parts as necessary.
- Improperly adjusted rack guide.
  - Adjust rack guide (page 11-10).
  - If the rack guide adjustment is OK, check the pinion bearings for wear or damage. Replace them as necessary.

(cont'd)

General (cont'd)

Shock or vibration when wheel is turned to full lock.	Pump belt slipping on pulley (pump stops momentarily).	Adjust belt tension (page 17-8) or replace belt.
	Sticking relief valve; pulsation exceeds 980 kPa (10 kg/cm^2, 142 psi).	Check flow control valve (page 17-18); clean or replace as necessary. If the flow control valve is OK, replace the pump.
Assist (excessively light steering) at high speed.	Measure force required to turn wheel with bypass tube joint installed, and car parked on dry paved surface (page 11-12).	If below 50 N (5.0 kg, 11 lbs), check cut-off valve and control unit and replace parts as necessary.
Steering kicks back during wide turns.	Pump belt slipping.	Adjust belt tension (page 11-9) or replace belt.
	Sticking cut-off valve or control valve.	Replace cut-off valve or control unit.
	Rack guide adjusted too loose.	Adjust rack guide (page 11-10).
Wheel will not return smoothly.	Tire pressure too low.	Inflate to correct pressure.
	Improper front wheel alignment.	Re-adjust front wheel alignment or replace parts as necessary.
	Improperly adjusted rack guide.	Adjust rack guide (page 11-10).

Noise and Vibration

NOTE: Pump noise within 2—3 minutes after starting in cold weather (– 20°C, – 4°F or colder) is normal.

Humming	Humming, due to pulsation of fluid, is normal, particularly when wheel is turned with car stopped.	
	If equipped with Automatic transmission, the hum could be torque converter or pump noise.	Confirm by temporarily removing pump belt.
	High pressure line touching the frame.	Reposition the line.
Squeaking	Belt slipping.	Tighten or replace belt.
	Pinion shaft seal not lubricated.	Grease it.
	Horn contact not lubricated, or under too much pressure.	Grease the contact, or bend it to reduce the pressure.
	Burrs on the pinion gear.	Remove pinion and file burrs smooth.
Rattle or chattering	NOTE: A single "clunk" may be a normal amount of linkage clearance. To distinguish this type of clunk, turn the wheel back and forth with the engine OFF.	
	Loose pump pulley.	Tighten or replace pulley. If shaft is loose, replace the pump.
	Loose steering shaft connector, tie-rod, or ball joint.	Check and tighten, or replace parts as necessary.
	Lower column hanger bushing damaged.	Replace column assembly.
Hissing	Lines or hoses from the control unit touching each other.	Reposition lines so they don't touch.
	Noise from control valve.	Replace the control unit.
Pump gear noise	NOTE: Pump noise up to 2-3 minutes after starting in cold weather (–20°C, –4°F or colder) is normal. Compare pump noise at operating temperature to another car.	If pump noise is abnormally loud, check the pump drive and driven gears (page 11-16).
Grating noise from pump	Cavitation caused by air bubbles in fluid.	Check fluid level. If low, fill reservoir to proper level, and check for leaks. Tighten or replace as necessary.
		Check for crushed suction hose or a loose hose clamp allowing air into the system. Tighten or replace as necessary.

Fluid Leaks

- **Steering gearbox**
  - Leaking from cylinder end seal into tie-rod boots.
    - NOTE: When fluid leaks from one side of the rack the balance tube transfers the fluid to the other side, giving the appearance that both sides are leaking. To troubleshoot, remove both boots, clean the rack and locate the leak.
    - Leaking from left side.
      - Remove the control valve and inspect the 11 mm O-ring and the port housing bore for pits, burrs or scratches (page 11-25). Repair as necessary.
      - If no abnormality is found, replace the O-ring, reseal the gearbox and inspect the steering rack sealing surface for burrs or scratches between the steering rack gear teeth and the piston. Inspect the seal retainer bore in the gearbox housing for proper chamfer and sharp edges (page 11-39).
    - Leaking from right side.
      - Reseal gearbox and inspect the rack sealing surface between the steering rack piston and the right end (page 11-36).
  - Leaking from control unit mating surfaces.
    - Tighten attaching bolts or replace valve body or port housing.
  - Leaking from either side of valve body.
    - Replace all control unit seals and O-rings.
  - Leaking from drilled passage plug (steel ball).
    - Replace control valve body.
- **Pump**
  - Front seal leaking.
    - Replace front seal.
  - Pump housing leaks at either end.
    - Replace housing O-rings. If the housing still leaks, replace the pump.
- **Speed sensor**
  - Leaking.
    - Replace the sensor.
- **Reservoir**
  - Leaking from around dipstick.
    - Reservoir overfilled. Pull off the hose and drain to proper level.
- **Pump outlet line (high pressure)**
  - Leaking at threaded fitting.
    - Tighten fitting. If still leaking, replace hose.
  - Leaking at swagged joint.
    - Replace hose.
- **Low pressure hoses**
  - Leaking because of damage, deterioration, or improper assembly.
    - Replace or repair as necessary.
- **Pipes**
  - Leaking at gearbox connection.
    - Tighten connector. If still leaking, replace the pipe or control unit.

Pump Belt Adjustment

A properly adjusted belt should deflect about 19-24 mm (0.75—0.94 in.) when you push on it mid-way between the pulleys with a force of about 98N (10 kg, 22 lbs).

NOTE: On a brand new belt, the deflection should be 13—16 mm (1/2—5/8 in.) when first measured.

1. Remove the belt cover.
2. Loosen the pump adjusting nut, and pivot bolt.
3. Pry the pump away from the engine to get the proper tension, then retighten the adjusting nut, and pivot bolt.

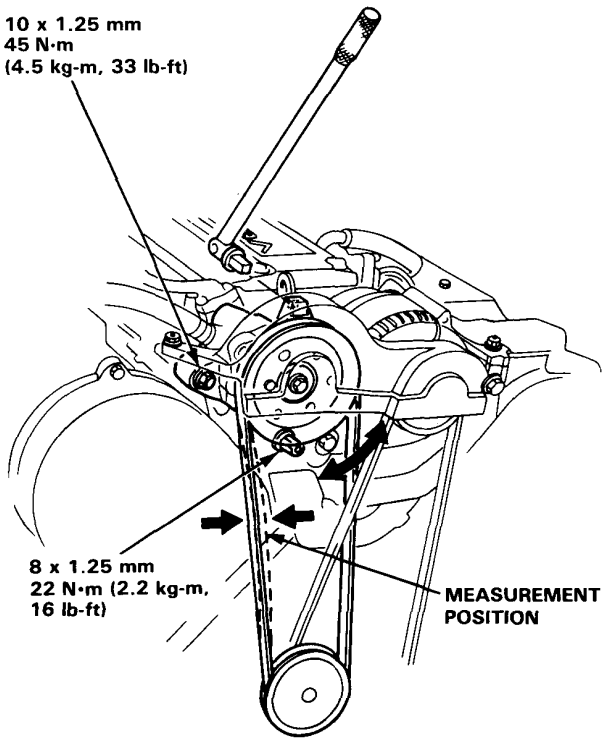

Fluid Replacement

Check the reservoir at regular intervals, and add fluid as necessary.

CAUTION: Use only GENUINE HONDA Power Steering Fluid. Using other fluids such as ATF or other *manufacturer's power steering fluid* will damage the system.

Fluid Level

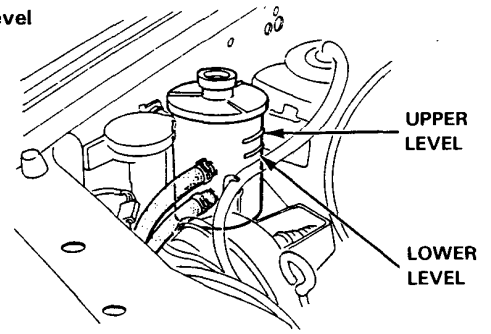

Fluid Replacement

CAPACITY: 1.7 ℓ (1.8 US qt) at change

1. Disconnect the return hose from the gearbox at the reservoir, and put the end in a suitable container.
2. Start the engine, let it run at idle, and turn the steering wheel from lock-to-lock several times. When fluid stops running out of the hose, shut off the engine. Discard the fluid.

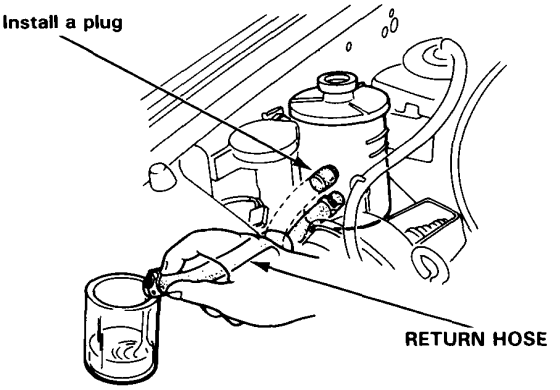

3. Refit the return hose on the reservoir.
4. Fill the reservoir to the upper level mark.
5. Start the engine and run it at fast idle, then turn the steering from lock-to-lock several times to bleed air from the system.
6. Recheck the fluid level and add some if necessary.

CAUTION: Do not fill the reservoir beyond the upper level mark.

On-Car Checks

Rack Guide Adjustment

1. Loosen the lock nut on the rack guide screw with the special wrench as shown.

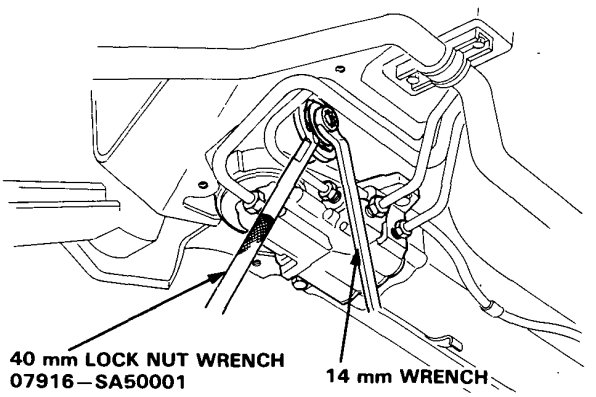

2. Tighten the guide screw until it compresses the spring and seats against the guide, then loosen it. Retighten it to about 3 N•m (0.3 kg-m, 2 lb-ft) and back it off about 20°.
   Tighten the lock nut to about 25 N•m (2.5 kg-m, 18 ft-lb) while preventing the guide screw from turning.

3. Check the steering effort as described on page 11-11.

Steering Wheel Rotational Play

1. Place the front wheels in a straight ahead position and measure the distance the steering wheel can be turned without moving the front wheels.

2. If the play exceeds the service limit, check all steering components.

Service Limit: 10 mm (0.4 in.)

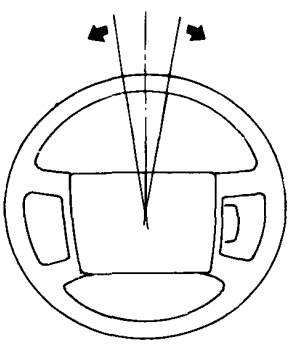

Pump Pressure Check

Check the fluid pressure as follows to determine whether the trouble is in the pump or gearbox.

NOTE: First check the power steering fluid level and pump belt tension.

1. Disconnect the outlet hose from the pump outlet fitting, and install the pump joint adaptor on the outlet.

2. Install the hose joint adaptor to the outlet hose.

3. Install the power steering pressure gauge between the pump and pump joint adaptors as shown.

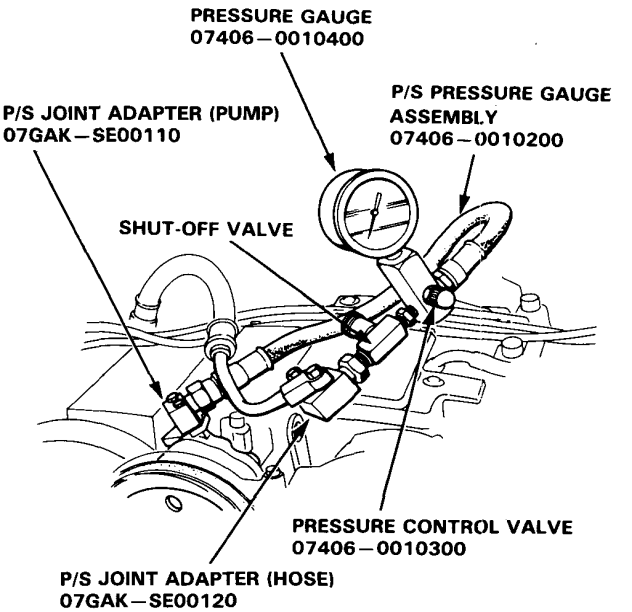

4. Open the shut-off valve fully.

5. Open the pressure control valve fully.

6. Start the engine and let it idle.

7. Turn the steering wheel from lock-to-lock several times to warm the fluid to operating temperature.

8. Close the shut-off valve, then, close the pressure control valve gradually until the pressure gauge needle is stable. Read pressure.

9. Immediately open the shut-off valve fully.

   CAUTION: Do not keep the shut-off valve closed more then 5 seconds or the pump could be damaged by over-heating.

   If the pump is in good condition, the gauge should read at least 7845–8826 kPa (80–90 kg/cm², 1138–1280 psi). A low reading means pump output is too low for full assist. Repair or replace the pump.

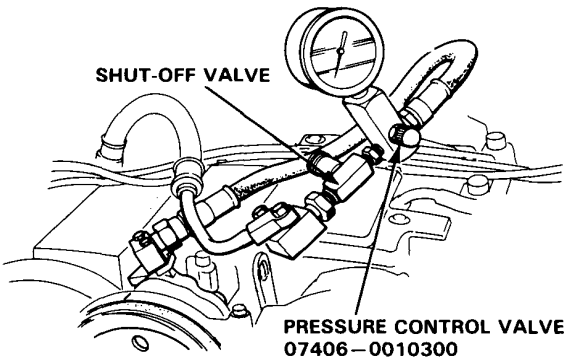

Assist Check with Car Parked

1. Check the power steering fluid level and pump belt tension.

2. Start the engine, allow to idle, and turn the steering wheel from lock-to-lock several times to warm up the fluid.

3. Attach a spring scale to the steering wheel. With the engine idling and the car on a clean, dry floor, pull the scale as shown and read it as soon as the tires begin to turn.

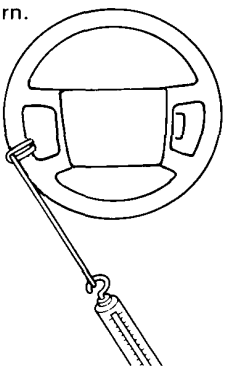

   The scale should read no more than 18 N (1.8 kg, 4 lb).
   If it reads more, go on step 4.

4. Stop the engine. Disconnect the hose from the speed sensor and plug the hose and the sensor fitting as shown.

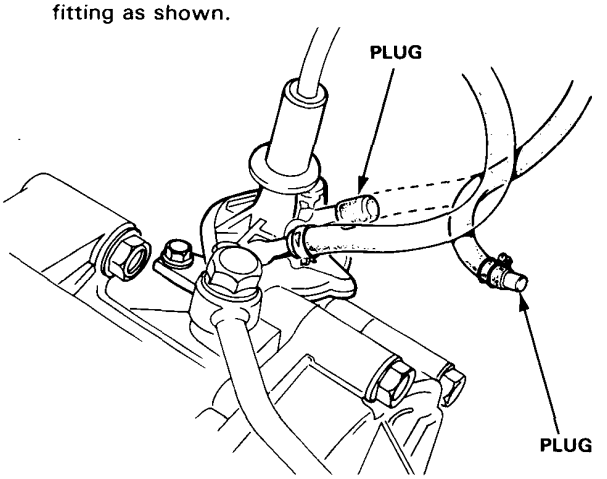

5. Start the engine and let it idle.

   - If the reading is now 18 N (1.8 kg, 4 lbs) or less, replace the speed sensor, see page 17-11.

   - If the reading is still more than 18 N (1.8 kg, 4 lbs), check the gearbox and pump.

6. Start the engine and let it idle.

7. Turn the steering wheel from lock-to-lock several times to warm the fluid to operating temperature.

8. Close the shut-off valve, then, close the pressure control valve gradually until the pressure gauge needle is stable. Read pressure.

9. Immediately open the shut-off valve fully.

   CAUTION: Do not keep the shut-off valve closed more then 5 seconds or the pump could be damaged by over-heating.

   If the pump is in good condition, the gauge should read at least 7845–8826 kPa (80–90 kg/cm², 1138–1280 psi). A low reading means pump output is too low for full assist. Repair or replace the pump.

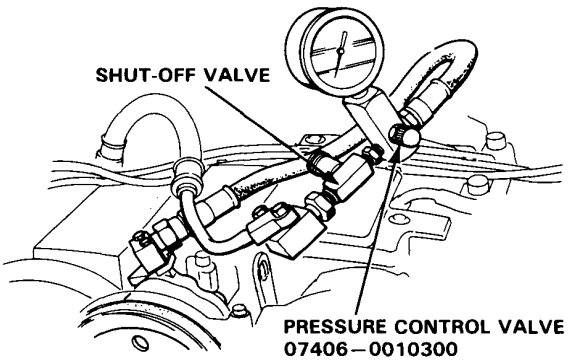

Assist Check with Car Parked

1. Check the power steering fluid level and pump belt tension.

2. Start the engine, allow to idle, and turn the steering wheel from lock-to-lock several times to warm up the fluid.

3. Attach a spring scale to the steering wheel. With the engine idling and the car on a clean, dry floor, pull the scale as shown and read it as soon as the tires begin to turn.

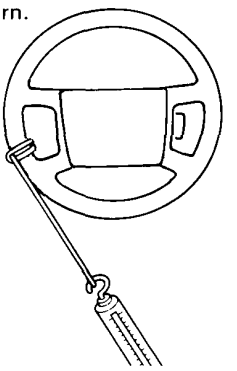

   The scale should read no more than 18 N (1.8 kg, 4 lb).
   If it reads more, go on step 4.

4. Stop the engine. Disconnect the hose from the speed sensor and plug the hose and the sensor fitting as shown.

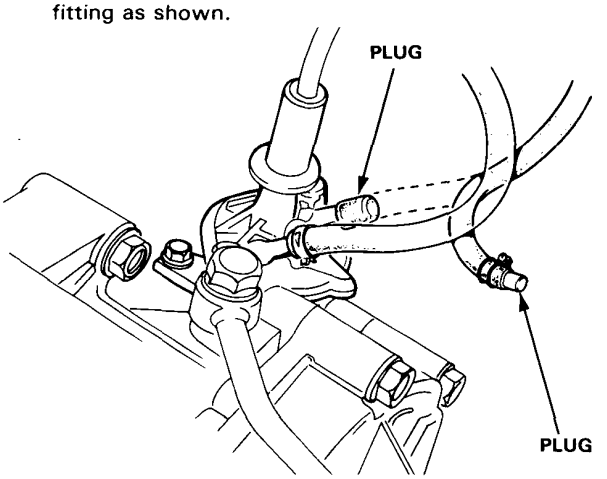

5. Start the engine and let it idle.

   - If the reading is now 18 N (1.8 kg, 4 lbs) or less, replace the speed sensor, see page 17-11.

   - If the reading is still more than 18 N (1.8 kg, 4 lbs), check the gearbox and pump.

On-Car Checks

Assist Check

1. Check the power steering fluid level and pump belt tension.

2. Start the engine, let it warm up to normal temperature, and turn the steering wheel lock-to-lock a few times to warm up the fluid.

3. Stop the engine. To simulate speeds above 50 km/h (30 mph), disconnect the hoses from the speed sensor and connect them to the Bypass Tube Joint.

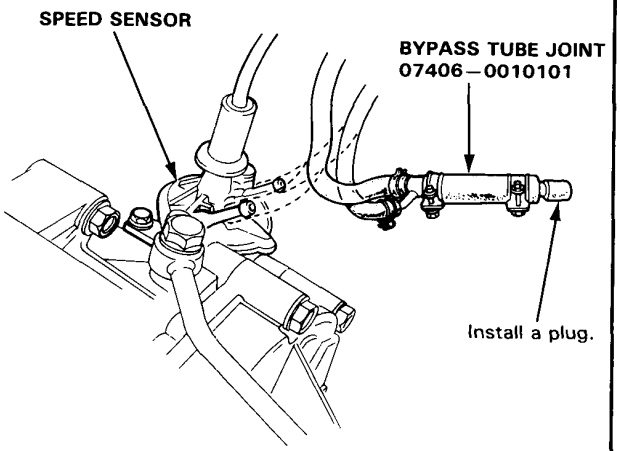

4. Attach the spring scale to the steering wheel. With the engine idling and the car on a clean, dry floor, pull the scale as shown and read it as soon as the tires begin to turn.

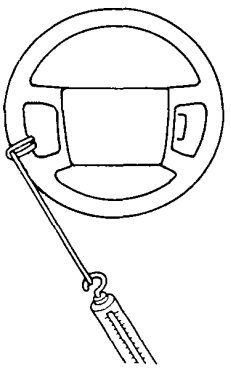

- If the scale reads a normal 50 N (5.0 kg, 11 lbs), or more, the assist at high speeds is being caused by reduced speed sensor output. Replace the sensor.

- If the scale reads less than 50 N (5.0 kg, 11 lbs), the sensor is OK, and the problem is in the sensor feed line, the pump, or the control unit. See if the feed line is pinched or bent then check pump.

Speed Sensor Replacement

1. Remove the speed sensor mounting bolt and pull the speed sensor from the transmission housing.

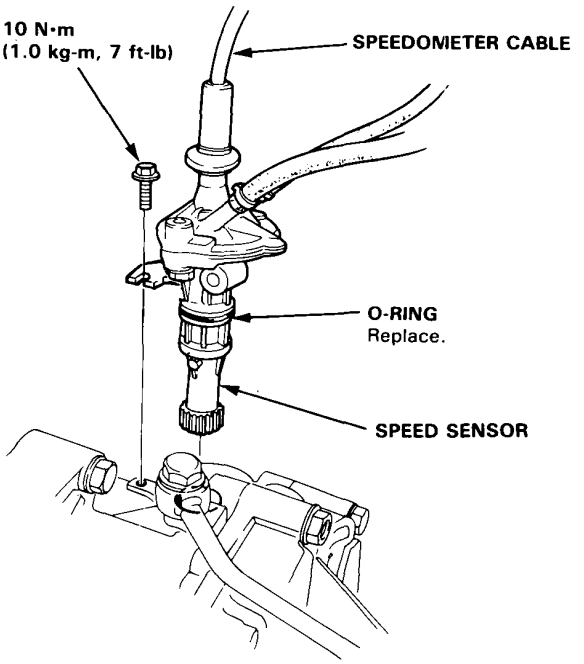

2. Pull up the speedometer cable boot, remove the clip, and pull out the speedometer cable.

3. Disconnect the speed sensor hoses and plug the fittings.

4. After installing a new sensor, turn the steering wheel lock-to-lock with the engine idling to bleed air from the system.

5. Check the reservoir and add fluid if necessary.

On-Car Checks

Assist Check

1. Check the power steering fluid level and pump belt tension.

2. Start the engine, let it warm up to normal temperature, and turn the steering wheel lock-to-lock a few times to warm up the fluid.

3. Stop the engine. To simulate speeds above 50 km/h (30 mph), disconnect the hoses from the speed sensor and connect them to the Bypass Tube Joint.

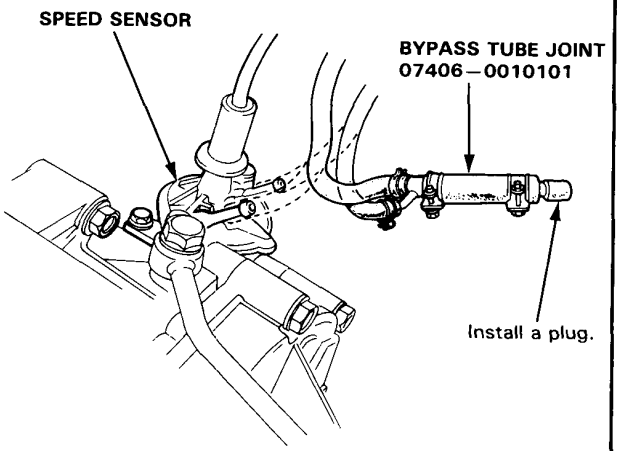

4. Attach the spring scale to the steering wheel. With the engine idling and the car on a clean, dry floor, pull the scale as shown and read it as soon as the tires begin to turn.

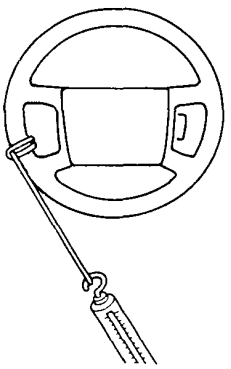

- If the scale reads a normal 50 N (5.0 kg, 11 lbs), or more, the assist at high speeds is being caused by reduced speed sensor output. Replace the sensor.

- If the scale reads less than 50 N (5.0 kg, 11 lbs), the sensor is OK, and the problem is in the sensor feed line, the pump, or the control unit. See if the feed line is pinched or bent then check pump.

Speed Sensor Replacement

1. Remove the speed sensor mounting bolt and pull the speed sensor from the transmission housing.

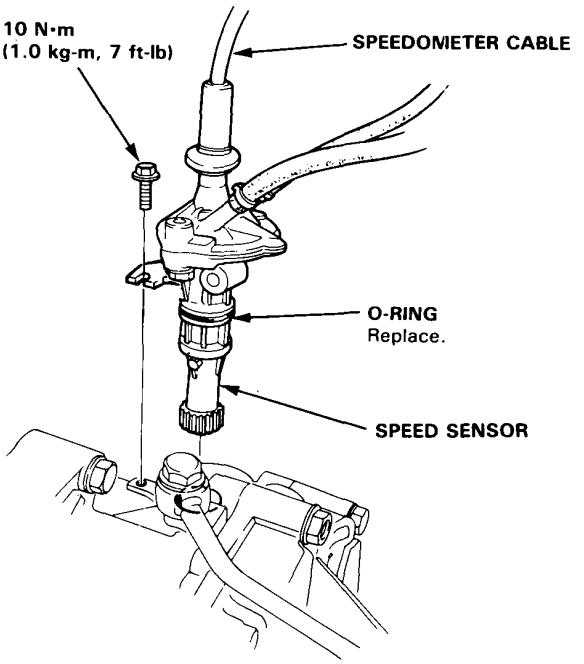

2. Pull up the speedometer cable boot, remove the clip, and pull out the speedometer cable.

3. Disconnect the speed sensor hoses and plug the fittings.

4. After installing a new sensor, turn the steering wheel lock-to-lock with the engine idling to bleed air from the system.

5. Check the reservoir and add fluid if necessary.

Column

Removal/Installation

1. Remove the steering wheel.
2. Remove the cover panel under the steering column.
3. Remove the steering joint cover.
4. Remove the steering joint bolt, and move the joint toward the column.
5. Remove the column B holder.
6. Remove the bolts attaching the steering column.
7. Remove the column cover.
8. Remove the turn signal cancel sleeve.
9. Disconnect each wire connector, and remove the slip ring assembly and the combination switch assembly.
10. Installation is in the reverse order of removal.

NOTE: LH drive shown, RH drive is similar.

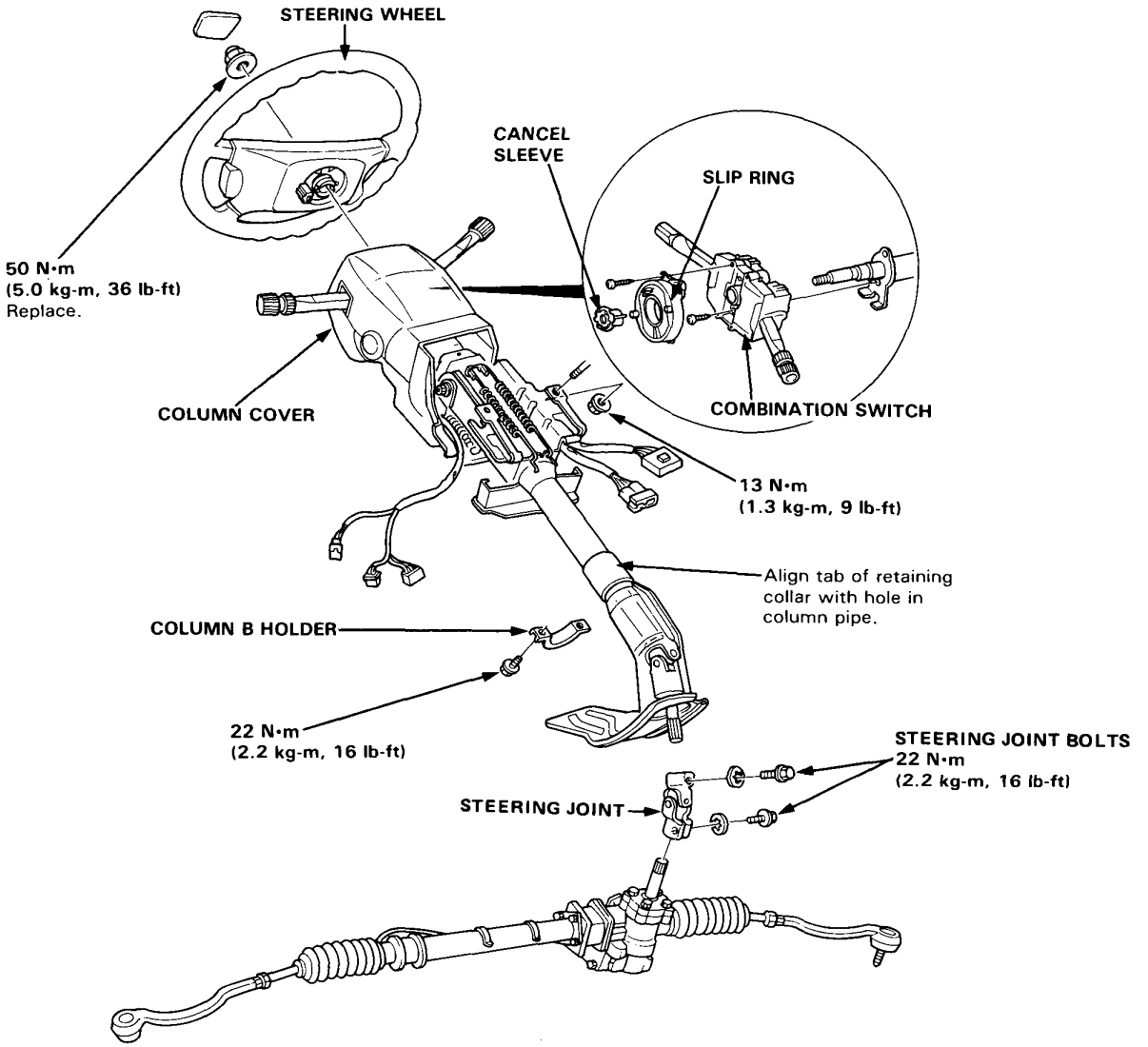

CAUTION: Before tightening the steering joint bolts, pull up the steering joint to make sure that all parts are properly seated.

Steering Wheel

Disassembly/Reassembly

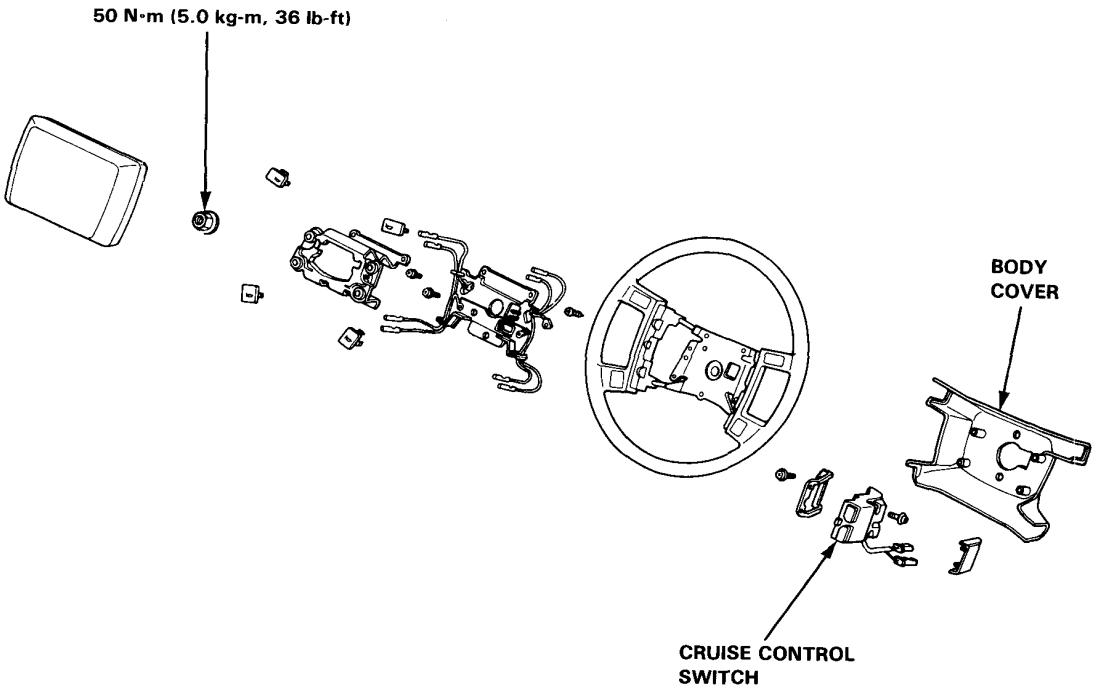

Steering Lock

Steering Lock Replacement

1. Remove the steering column covers.
2. Disconnect the ignition switch connector.
3. Center punch each of 2 shear bolts and drill their heads off with a 3/8 in. drill bit.

   CAUTION: Do not damage the switch body when removing the shear bolt heads.

4. Remove the shear bolts from the switch body.

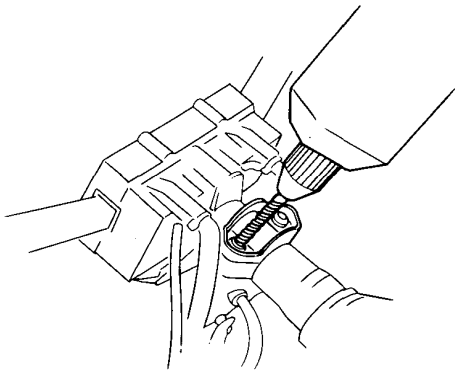

5. Install the new ignition switch without the key inserted.
6. Loosely tighten the new shear bolts.

   NOTE: Make sure the projection on the ignition switch is aligned with the hole in the steering column.

7. Insert the ignition key and check for proper operation of the steering wheel lock and that the ignition key turns freely.
8. Tighten the shear bolts until the hex heads twist off.

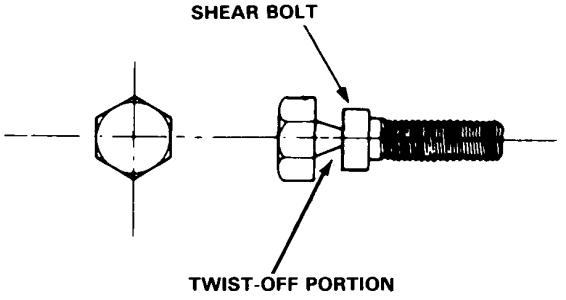

Lock Cylinder Replacement

1. Remove the ignition switch.
2. Turn the ignition key to "I".
3. Push the pin in and remove the lock cylinder from the lock body.

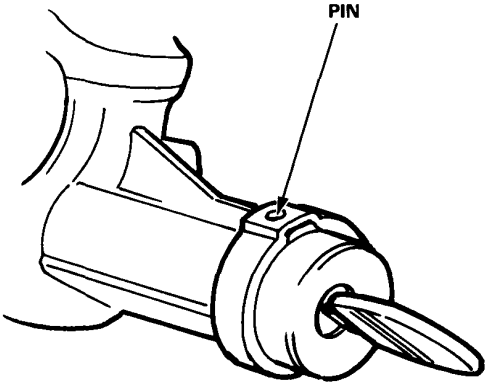

4. Turn the key to "0" and align the lock cylinder with the lock body.
5. Turn the key almost to "I" and insert the lock cylinder until the pin touches the body.
6. Turn the key to "1", push the pin and insert the lock cylinder into the lock body until the pin clicks into place.

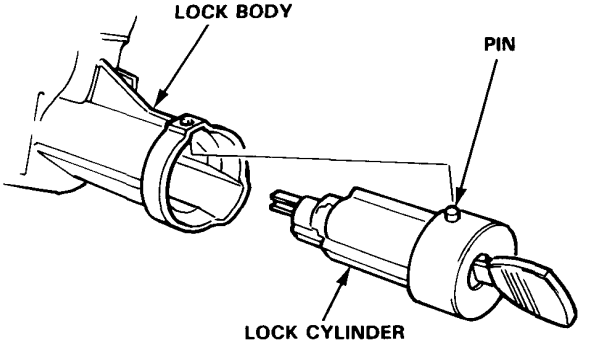

7. Install the ignition switch.

Index/Inspection

CAUTION: Pump components are made of aluminum. Be careful not to damage them when servicing.

- Clean all of the disassembled parts thoroughly.
- Replace all O-rings and seals. Do not dip new O-rings and seals in solvent; coat O-rings with steering grease before installation, and make sure they stay in place during reassembly.
- The shaded parts are selectively fitted, and should not be disassembled except to replace seals. If any one of them is faulty, replace the whole pump as an assembly.

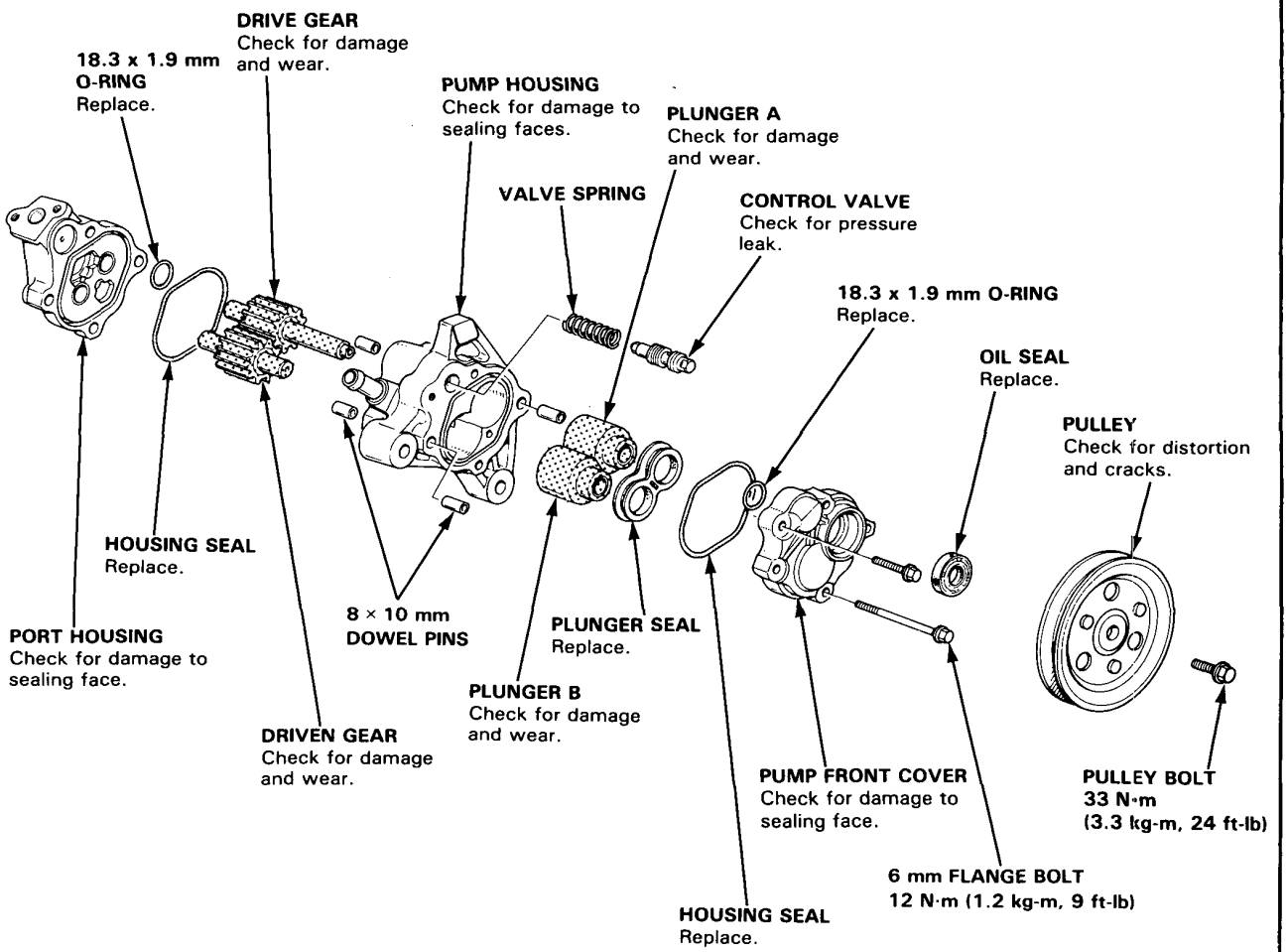

Replacement

1. Remove the belt cover.
2. Drain the fluid from the system (page 11-9).
3. Disconnect the inlet and outlet hoses from the pump and plug them.
4. Remove the belt by loosening the pump pivot bolt.
5. Remove the bolt and nut, then remove the pump.

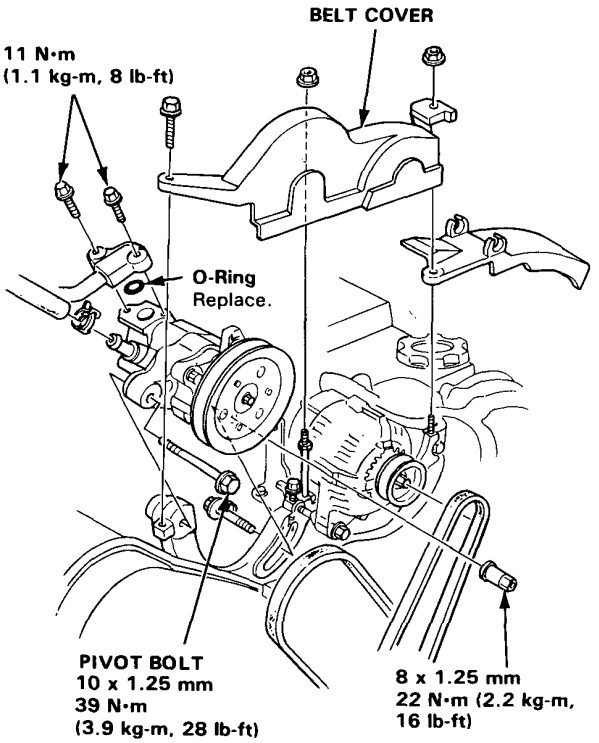

6. Loosely install the new pump on the bracket.
7. Connect the inlet and outlet hoses to the pump.
8. Install and adjust the belt (page 11-9).
9. Install the belt cover.
10. Fill the reservoir with new fluid to the UPPER LEVEL on the reservoir.
11. Start the engine and let it run at fast idle while turning the steering wheel lock-to-lock several times to bleed air from the system.
12. Check the reservoir and add fluid if necessary.

Preload Inspection

Check the pump preload with a torque wrench.

Preload: 4 N•m (0.4 kg-m, 3 lb-ft) max.

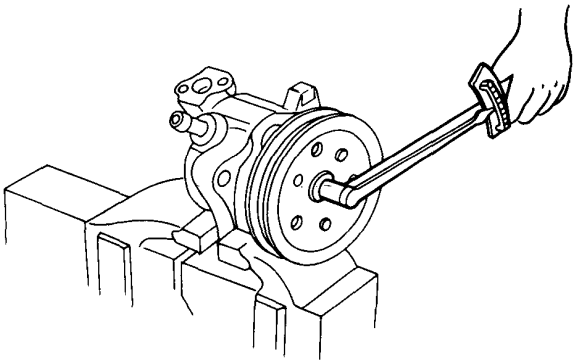

Pulley Replacement

1. Hold the pulley with the universal holder, and remove the pulley bolt, then remove the pulley.

   CAUTION: Pulley bolt has left hand threads.

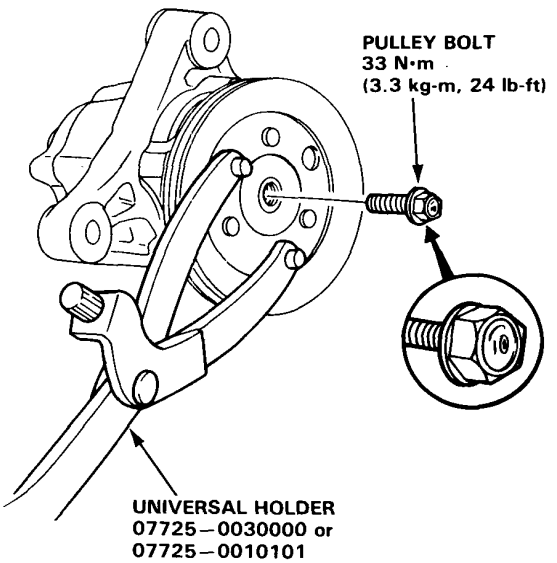

Control Valve Inspection and Replacement

1. Remove the five 6 mm bolts in the order shown, then separate the pump front cover, pump housing and port housing.

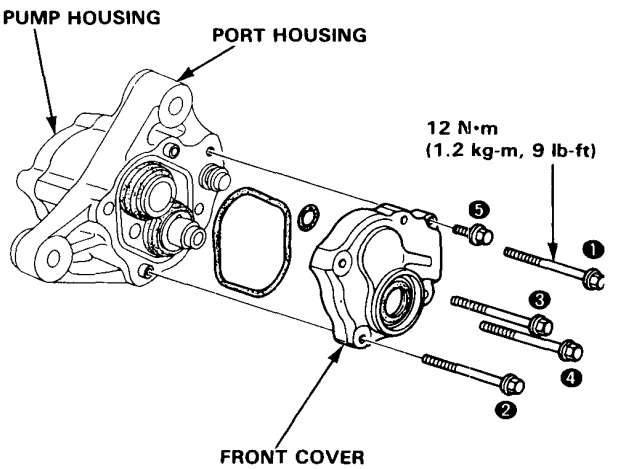

2. Remove the control valve from the pump housing.

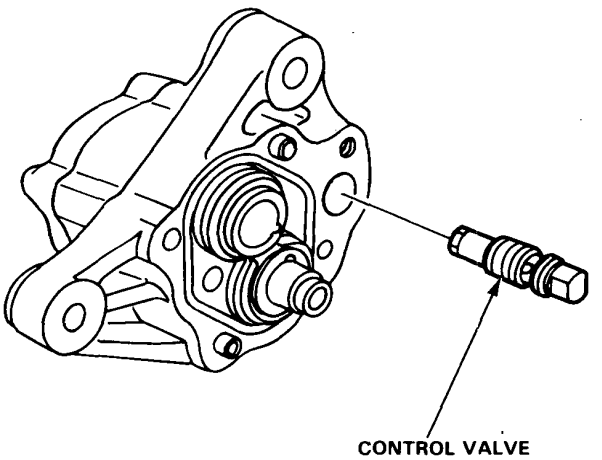

Pulley Replacement

1. Hold the pulley with the universal holder, and remove the pulley bolt, then remove the pulley.

   CAUTION: Pulley bolt has left hand threads.

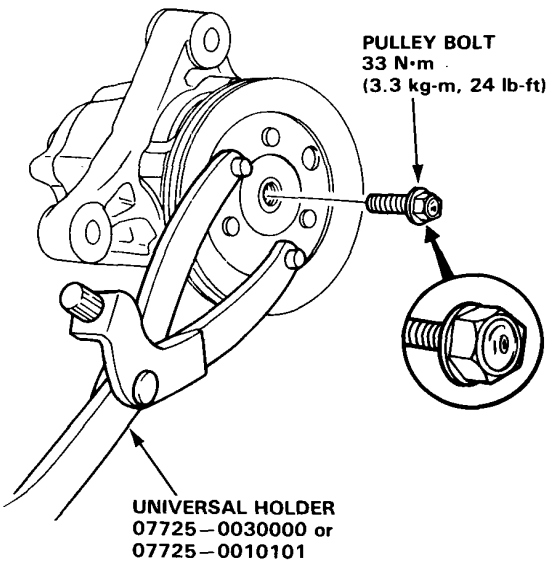

Control Valve Inspection and Replacement

1. Remove the five 6 mm bolts in the order shown, then separate the pump front cover, pump housing and port housing.

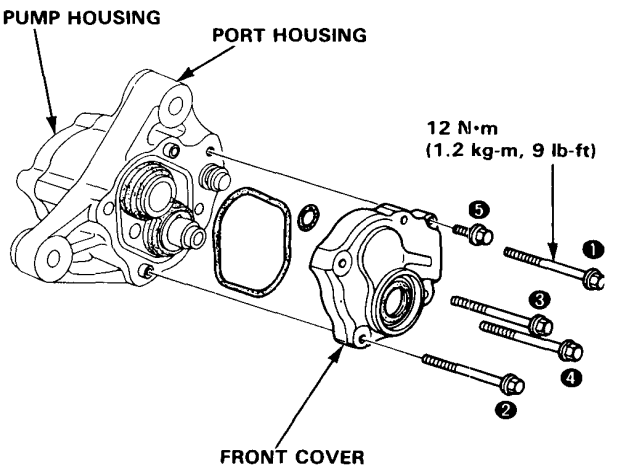

2. Remove the control valve from the pump housing.

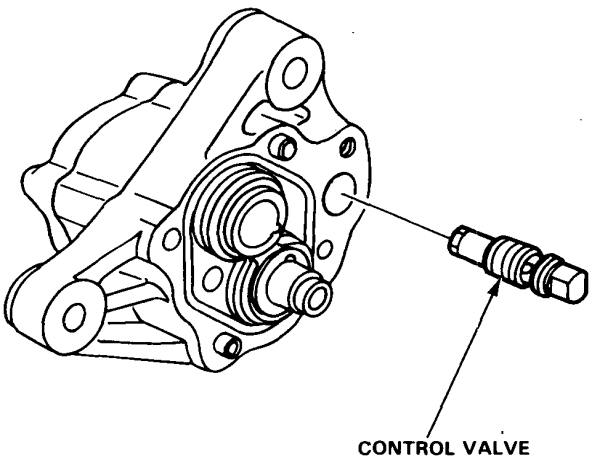

4. Remove the valve spring from the pump housing.

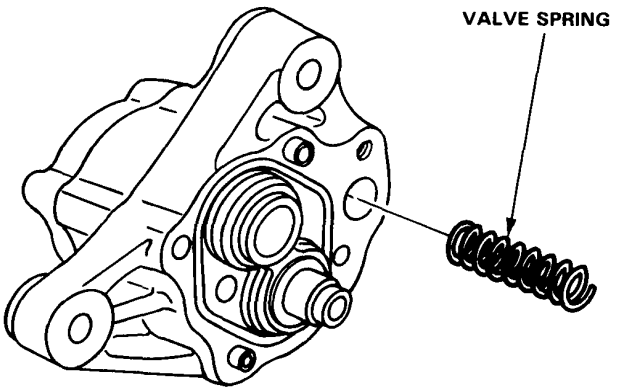

5. Check for wear, burrs, and other damage to the edges of the grooves in the valve.

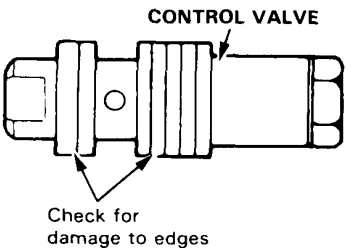

6. Slip the valve back in the pump and check that it moves in and out smoothly.

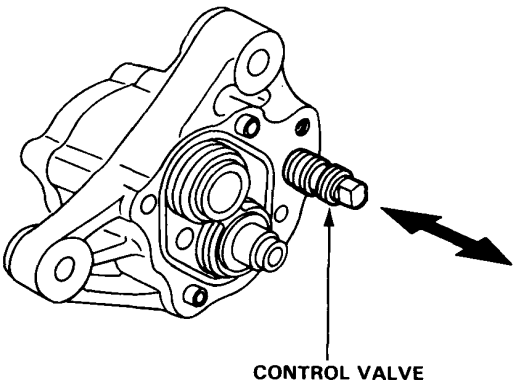

If OK, go on to step 7, if not, replace the valve:

NOTE: The original valve was selected for a precise fit in the pump housing bore, so make sure the new one has the same identification mark.

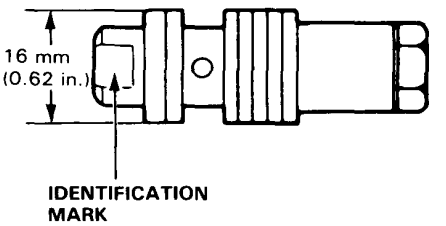

Mark	Part Number	Part Name	Outside Diameter mm(in)
A	56350–PC1 –010	CONTROL VALVE A	15.995–16.000 (0.6297–0.6299)
Without mark	56360–PC1 –010	CONTROL VALVE B	16.000–16.006 (0.6299–0.6302)

(cont'd)

Control Valve Inspection and Replacement (cont'd)

7. Attach a hose to the end of the valve as shown.

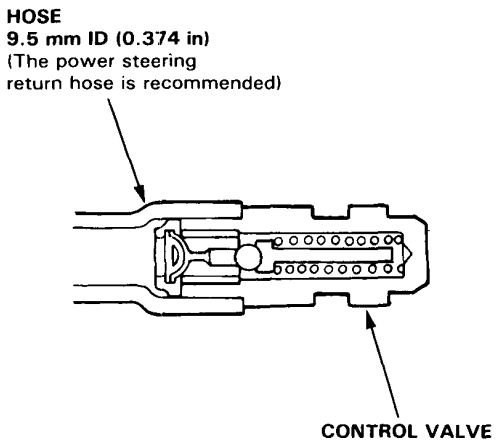

8. Then submerge the valve in a container of power steering fluid or, and blow on the hose. If air bubbles leak through the valve, replace or repair it as follows.

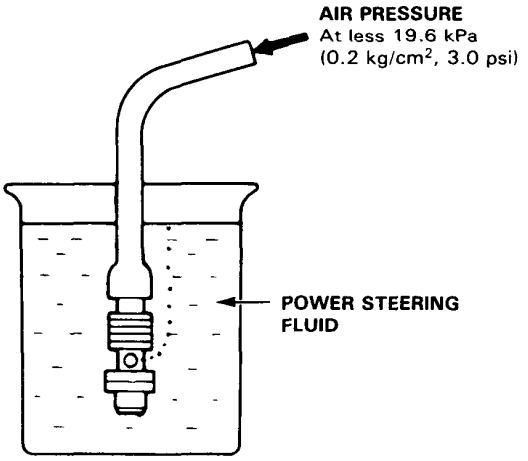

9. Clamp the bottom end of the valve in a vise with soft jaws.

10. Unscrew the seat in the top end of the valve, and remove any shims, the relief check ball, relief valve and relief valve spring.

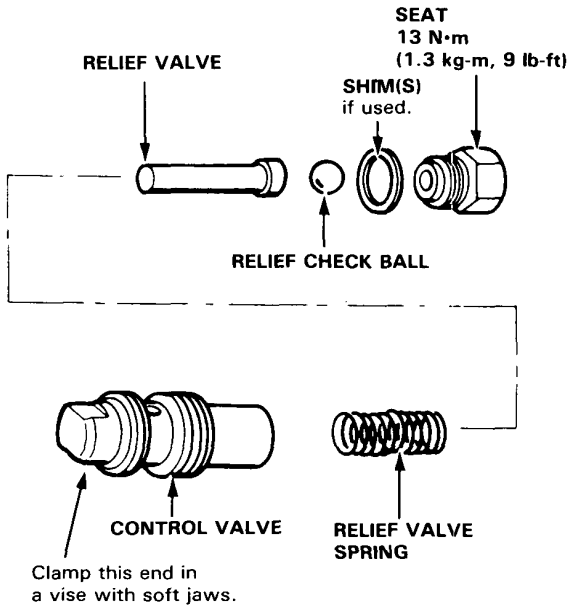

11. Clean all the parts in solvent, dry them off, then re-assemble and re-test the valve.

    NOTE: If necessary, relief pressure is adjusted at the factory by adding shims under the check ball seat. If you found shims in your valve, be sure you reinstall as many as you took out.

12. Install the control valve in the reverse order of removal.

    - Apply steering grease (P/N 08740--99969) to new O-rings.
    - Coat the control valve with power steering fluid then install it and its spring.

Housing Disassembly

CAUTION: The pump components are made of alminum. Be careful not to damage them when servicing.

1. Remove the pump from car (page 11-17), and remove the pulley (page 11-18) and pump front cover.

   NOTE: Remove the front cover bolts in the sequence shown.

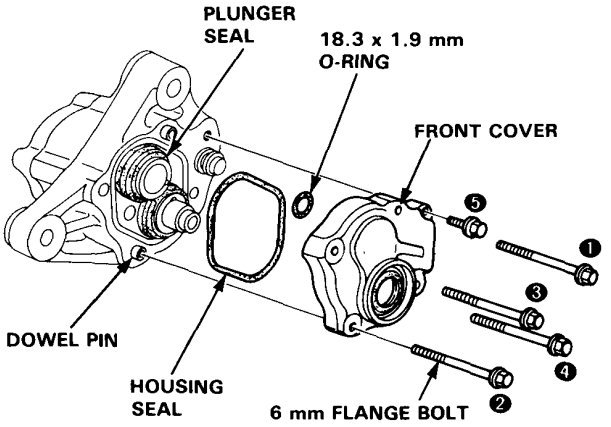

2. Remove the housing seal from the pump housing.
3. Remove the dowel pins, plunger seal and O-ring from the pump housing.
4. Separate the port housing from the pump housing.

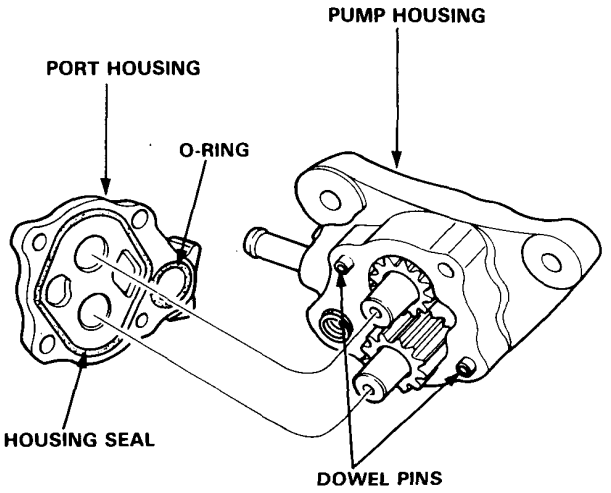

5. Remove the dowel pins from the pump housing and remove the housing seal and O-ring from the port housing.
6. Remove the pump drive and driven gears from the housing.

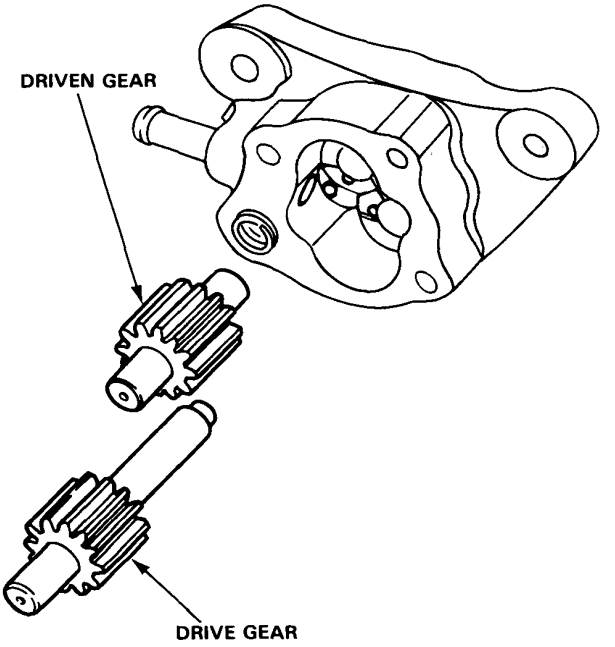

7. Remove the plungers.
8. Pry the oil seal out from the front cover.

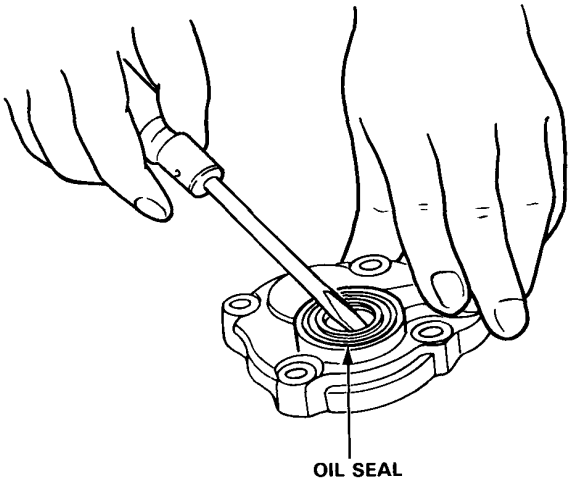

Housing Reassembly

1. Coat the outer surfaces of the plungers with power steering fluid, then install them in the pump housing. Make sure the plunger holes are positioned as shown.

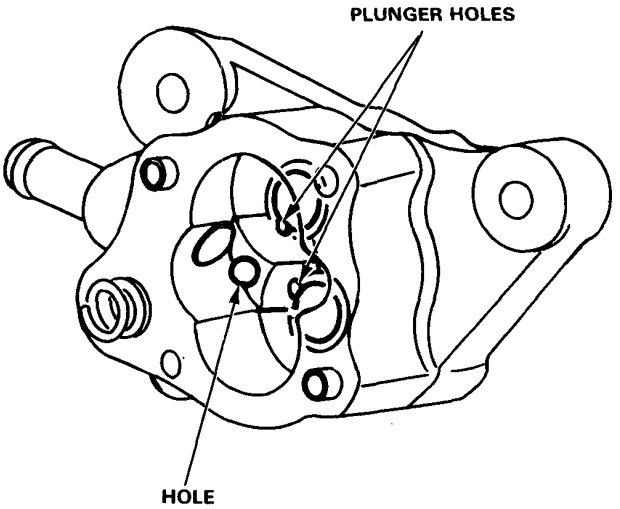

2. Coat the inside of the plungers with power steering fluid.

3. Install the pump drive and driven gears in the pump housing.

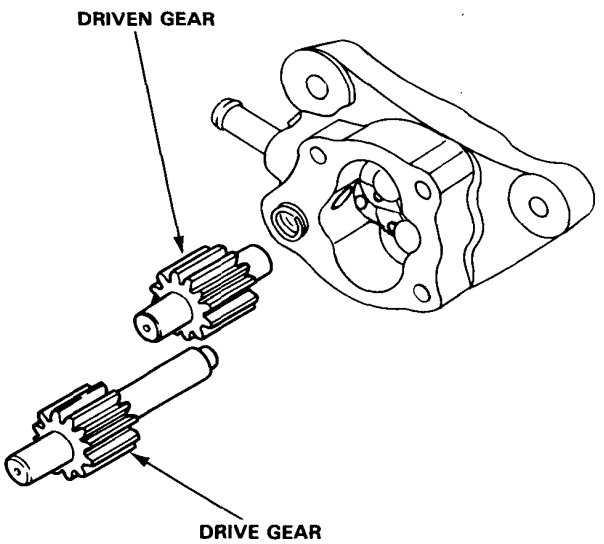

4. Coat the bushings on the port housing with power steering fluid.

5. Install the dowel pins in the pump housing, then install the new housing seal and O-ring in the port housing.

   NOTE: Coat the new housing seal and O-ring with grease.

6. Install the port housing on the pump housing.

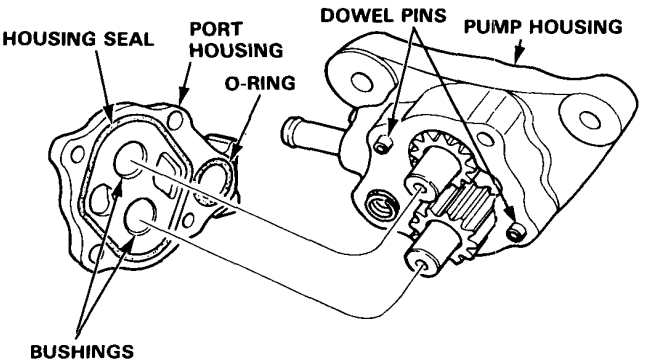

7. Grease the new plunger seal and install it over the plungers.

8. Install the dowel pins.

9. Fill the groove of the pump housing with grease and install the new housing seal in the pump housing.

10. Grease the new O-ring and install it in the pump housing.

11. Install the pump front cover.

    NOTE: Tighten the front cover bolts in the order shown.

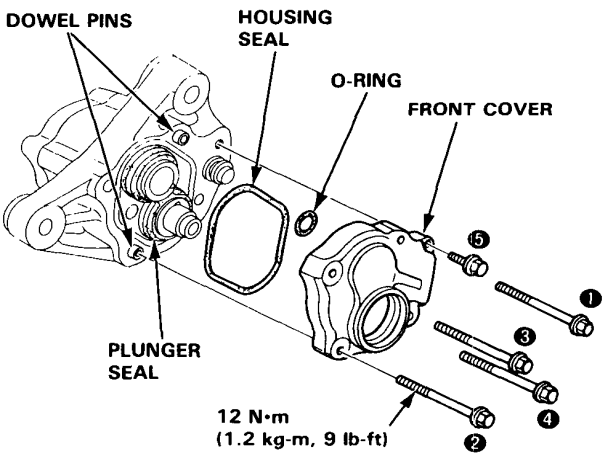

12. Loosely install the new oil seal in the pump front cover.

NOTE: The oil seal spring may come out of position if the oil seal is not installed squarely.

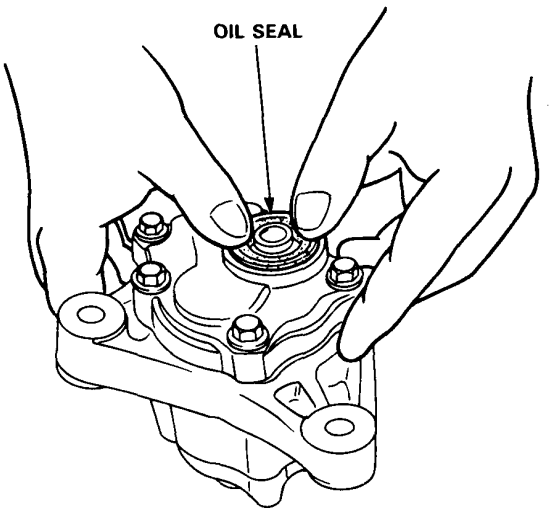

13. Install the new oil seal in the pump front cover; get it started by hand, then use the collar driver to push it in the rest of the way.

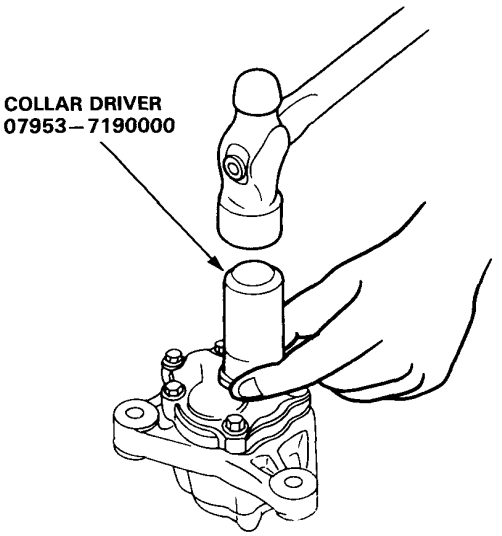

Index/Inspection

CAUTION:

- **Before disassembling the gearbox, wash it off with solvent and a brush.**
- **Thoroughly clean all disassembled parts.**
- **Always replace O-rings and seals.**
- **Replace parts with damaged sliding surfaces.**
- **Do not dip seals and O-rings in solvent; coat O-rings with grease, and make sure they stay in position during reassembly.**
- **The shaded parts (valve body, control valve, cut-off valve) are a matched set; if the valve body is faulty, replace the complete valve body unit.**

- **GREASE STEERING GREASE ..... Part Number 08740–99969**

NOTE: L.H. drive shown, RH drive is similar.

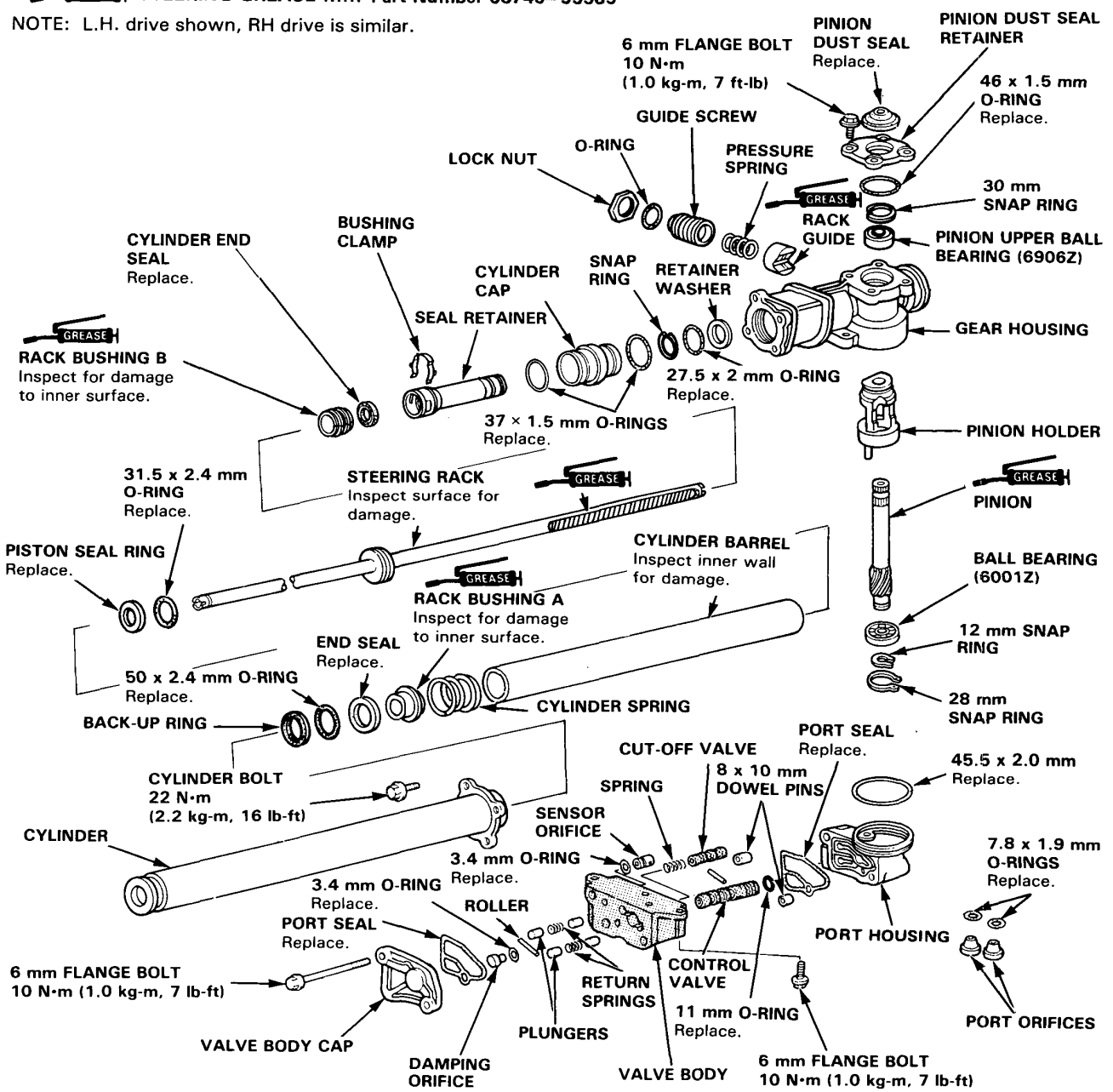

Valve Body Unit Disassembly

1. Drain the power steering fluid (page 11-9).
2. Remove the gearbox shield.
3. Using solvent and a brush, wash any oil and dirt off the control unit, its lines, and that end of the gearbox. Blow dry with compressed air.
4. Using flare nut wrenches, disconnect the four lines from the control unit.

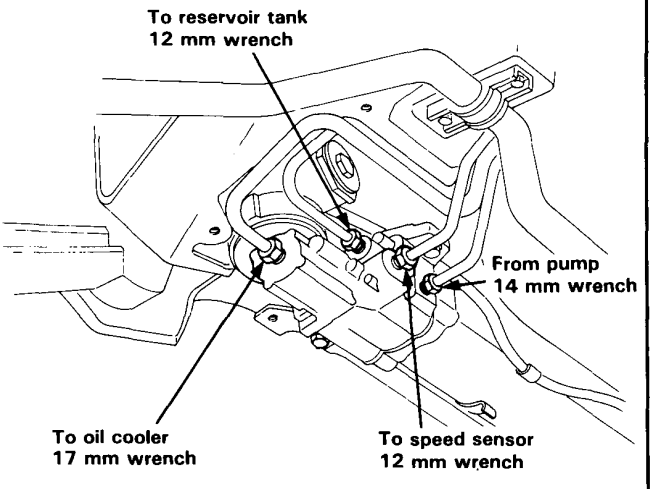

5. Remove the two 6 mm flange bolts and remove the valve body unit from the gear box.

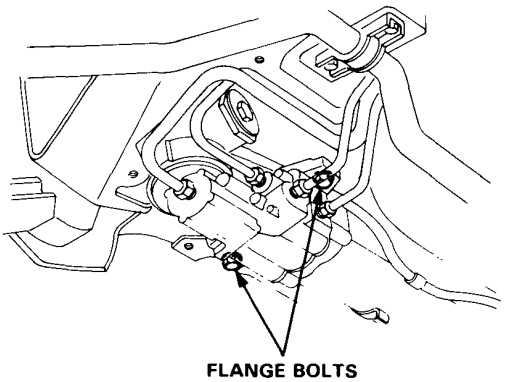

6. Remove the O-rings and port orifices from the gear box.
7. Remove the O-ring from the valve body unit.

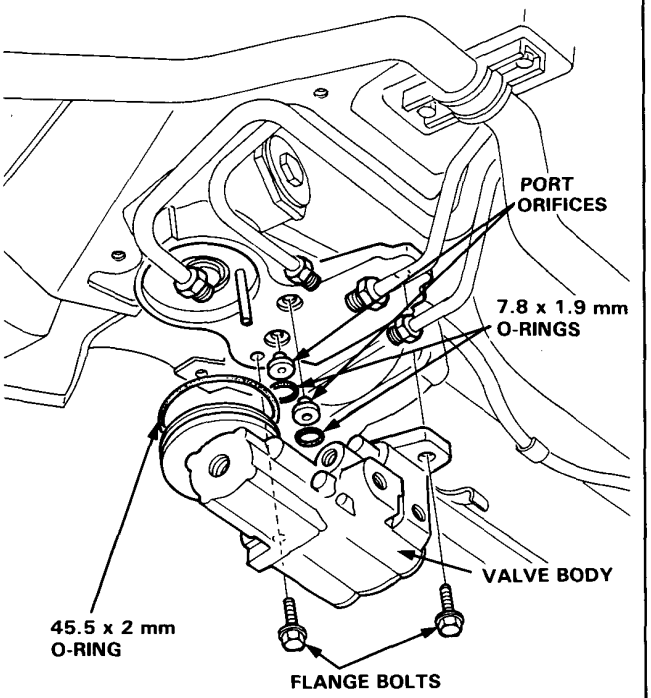

8. Remove the two 6 mm flange bolts, and remove the cap from the valve body.
9. Remove the port seal from the cap.

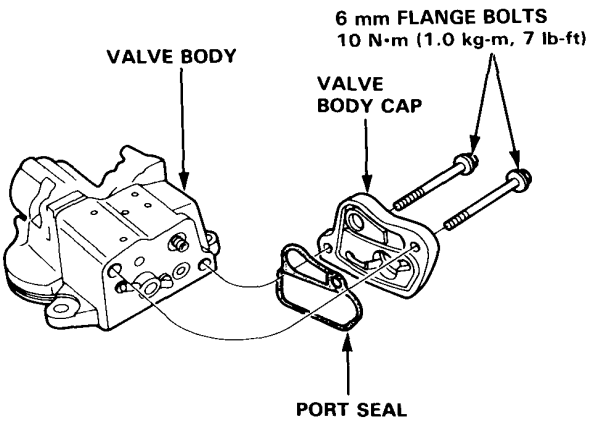

(cont'd)

Valve Body Unit Disassembly (cont'd)

10. Remove the cut-off valve and spring from the valve body.

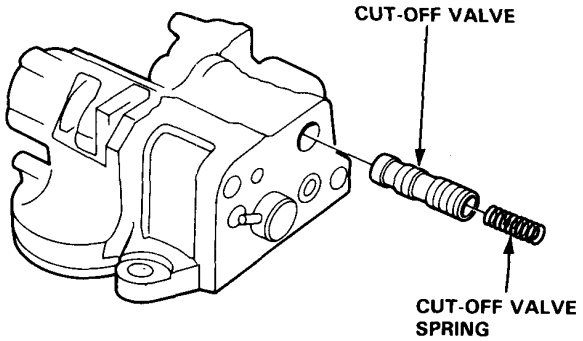

11. Check the cut-off valve:

- Inspect its surface for scoring or scratches.
- Slip it back into the valve body, and make sure it slides smoothly without drag and without side play.

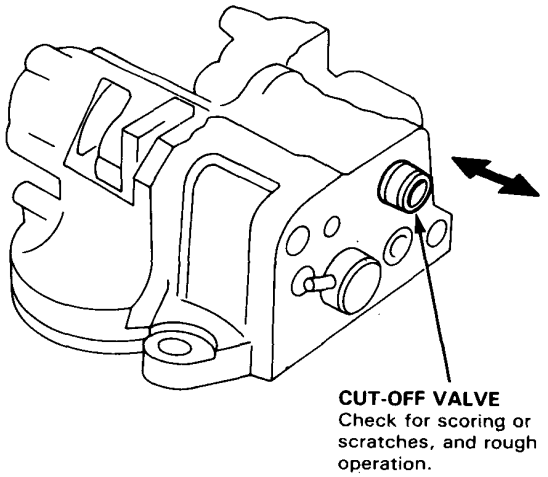

NOTE:
- The cut-off valve is sized to fit the valve body, so, if you replace it, make sure the new valve has the same identification mark on it.
- If the valve body is damaged, replace all three parts (valve body, cut-off valve and control valve) as a set.

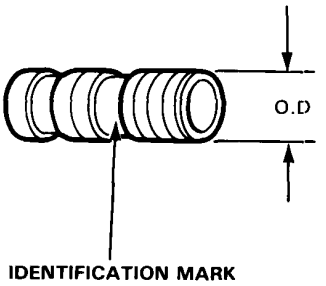

Identification mark	Outside diameter	Part number
A	10.000–10.005 mm (0.3937–0.3939 in.)	53650–SEO–950
B	9.995–10.000 mm (0.3935–0.3937 in.)	53651–SEO–950
C	9.990–9.995 mm (0.3933–0.3935 in.)	53652–SEO–950

12. Separate the valve body and port housing.

13. Remove the port seal and dowel pins from the port housing.

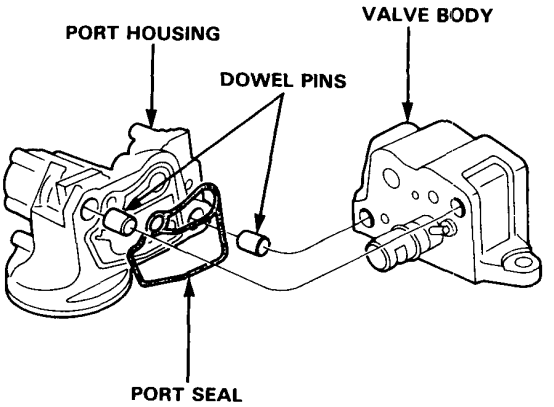

14. Remove the rollers from the control valve by pushing the valve out one side of the valve body, and then the other.

NOTE: When removing the rollers, hold the plungers with your fingers to keep them from popping out.

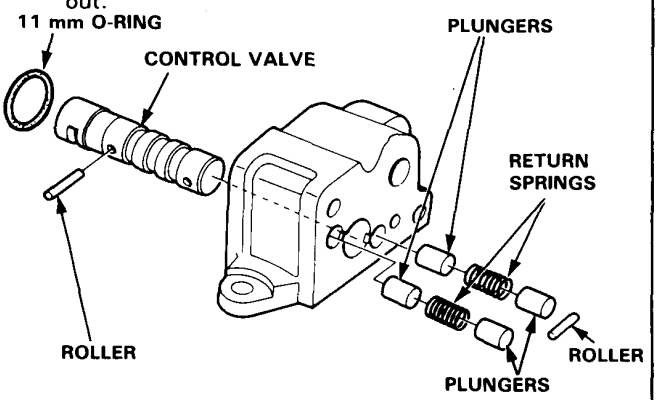

15. Remove the plungers, return springs and control valve from the valve body.

16. Remove the 11 mm O-ring from the control valve.

17. Check the plungers.

- Inspect their surface for scoring or scratches.
- Slip each plunger into the valve body, and make sure it slides smoothly, without drag or side play.
  If any plunger is damaged, replace it.

NOTE: If the valve body is damaged , replace all three parts (valve body, cut-off valve and control valve) as a set.

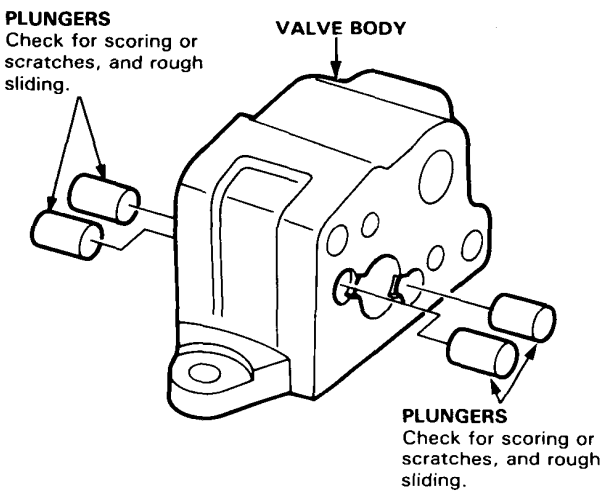

18. Check the control valve.

- Inspect its surface for scoring or scratches.
- Slip it into the valve body, and make sure it slides smoothly, without drag or side play.

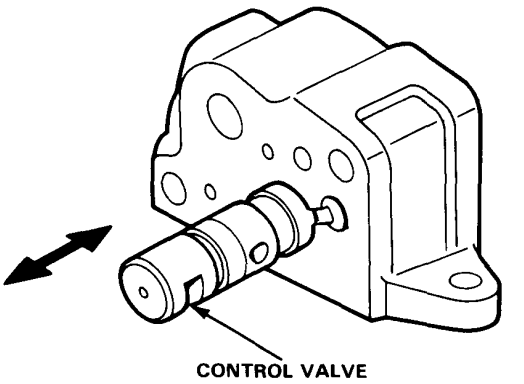

NOTE:
- The control valve is sized to fit the valve body, so, if you replace it, make sure the new valve has the same identification mark on it.
- If the valve body is damaged, replace all three parts (valve body, control valve and cut-off valve) as a set.

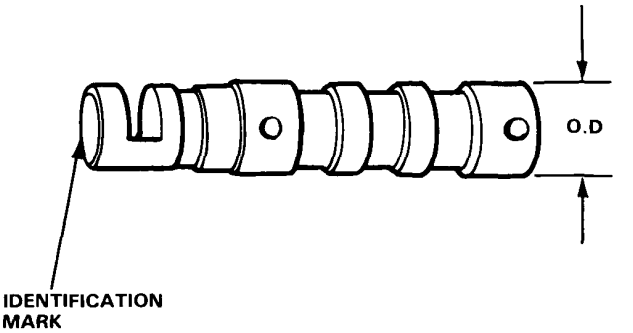

Identification mark	Outside Diameter	Part Number
X	13.998 – 14.003 mm (0.5511 – 0.5513 in.)	53646 – SE0 – 952
Y	13.993 – 13.998 mm (0.5509 – 0.5511 in.)	53647 – SE0 – 952
Z	13.988 – 13.993 mm (0.5507 – 0.5509 in.)	53648 – SE0 – 952

(cont'd)

Valve Body Unit Disassembly (cont'd)

19. Using a 1.5 mm (1/16") drill bit, remove the sensor orifice and O-ring.

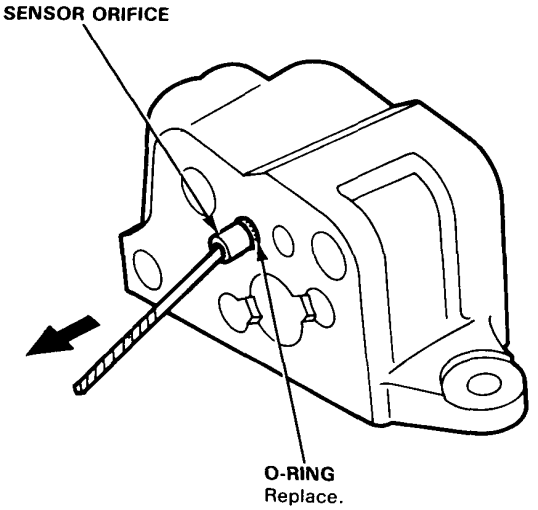

20. Using a 1.5 mm (1/16") drill bit, push the damping orifice and O-ring out of the valve body.

CAUTION: Grind the shank end of the drill bit flat before using.

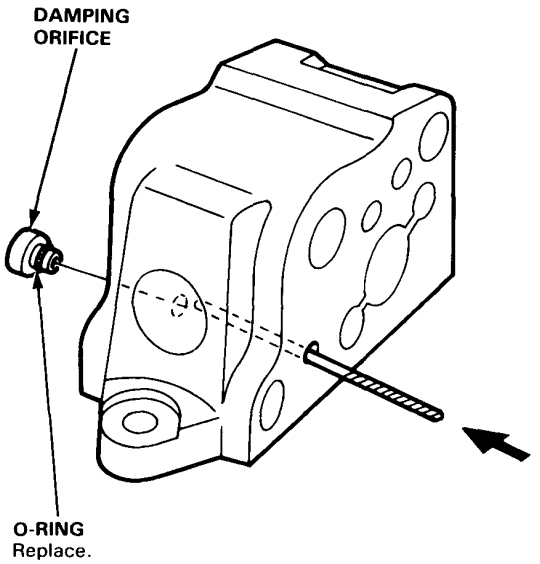

Valve Body Unit Assembly

1. Thoroughly clean the disassembled parts shown below.
2. Coat the plungers, cut-off valve and reaction control valve surfaces with power steering fluid.
3. Reassemble the parts in reverse order of disassembly.

CAUTION:

- **Replace the O-rings and seals with new ones.**
- **Do not dip the O-rings and seals in solvent.**
- **Apply grease in the port seal grooves to keep the seals in place.**
- ***Apply grease to the 45.5 x 2 mm and 11 mm O-rings to keep them in place in the valve ports.***
- **GREASE STEERING GREASE.....Part Number 08740–99969**

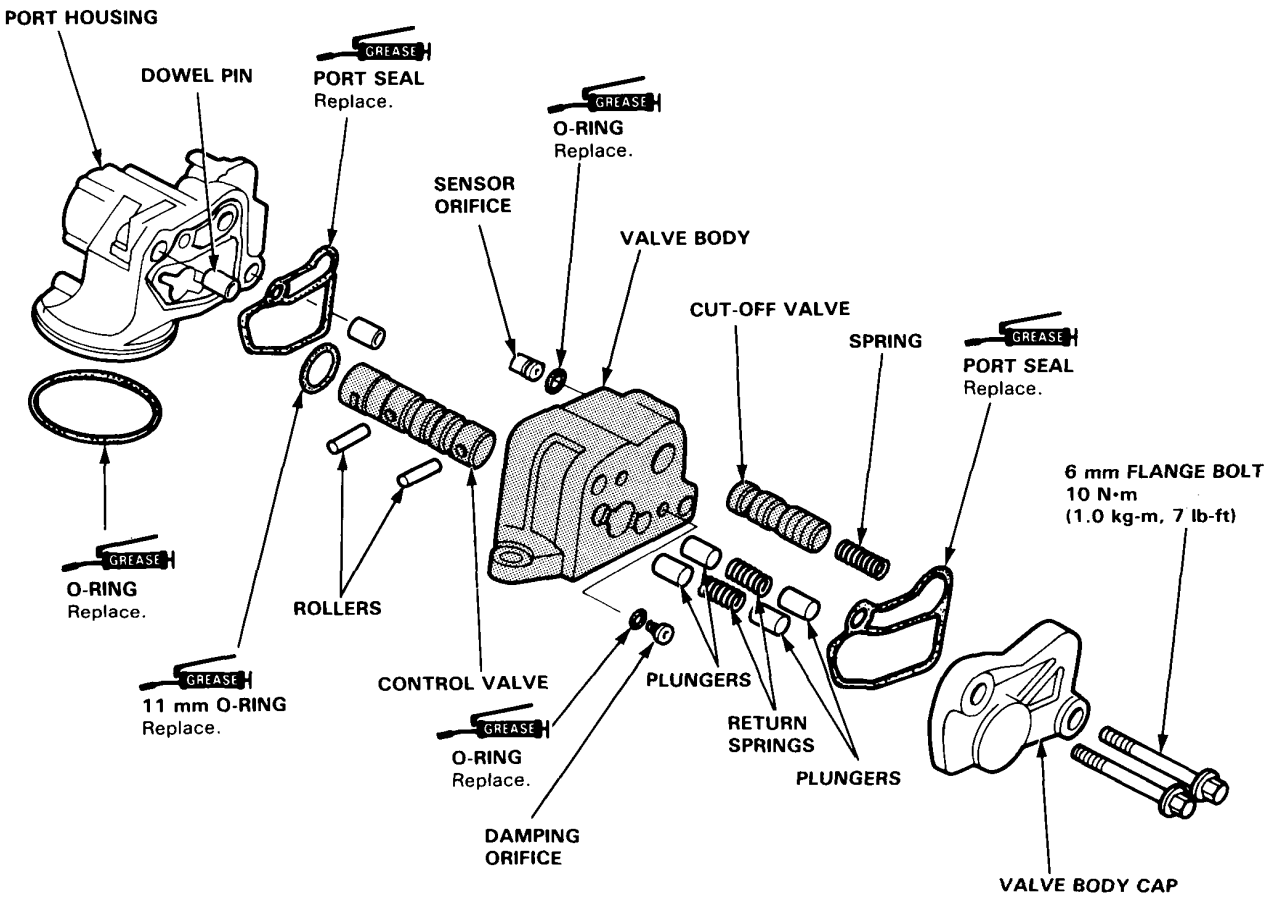

NOTE: If the Valve Body is damaged, it must be replaced as a set, with the Cut-off Valve and Control Valve (shaded parts).

(cont'd)

Valve Body Unit Assembly (cont'd)

4. Install and tighten the 6 mm flange bolts in the control valve body unit.

   CAUTION: Make sure the mating surface of the valve body and cap are flush at the upper side.

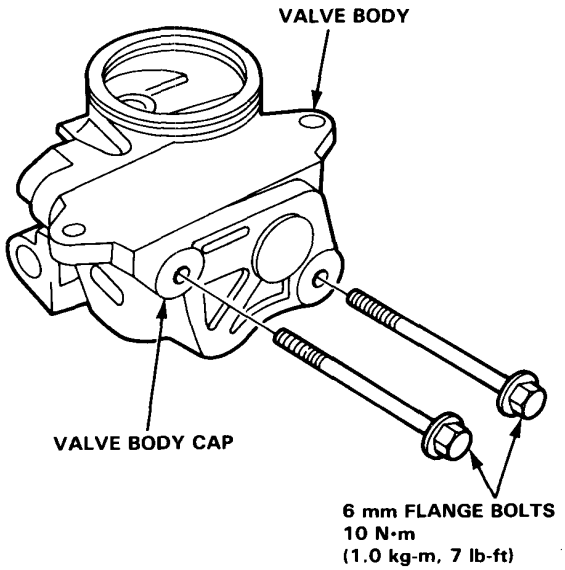

5. Make sure the control valve moves smoothly, and returns to neutral position.

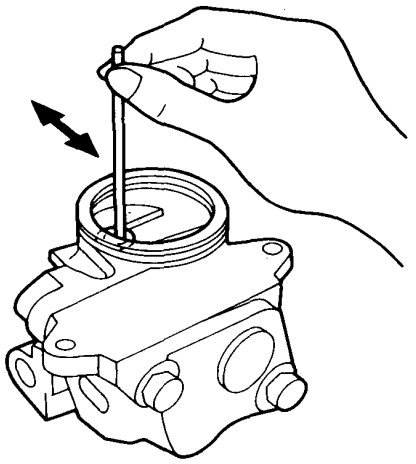

6. Coat the 7.8 x 1.9 mm O-rings with grease, and install them together with orifices.

7. Install the valve body unit on the gear housing with the two 6 mm bolts.

   CAUTION:
   - **When installing, be careful not to hit the pinion holder pin.**
   - **Make sure the O-rings are in place and not pinched.**

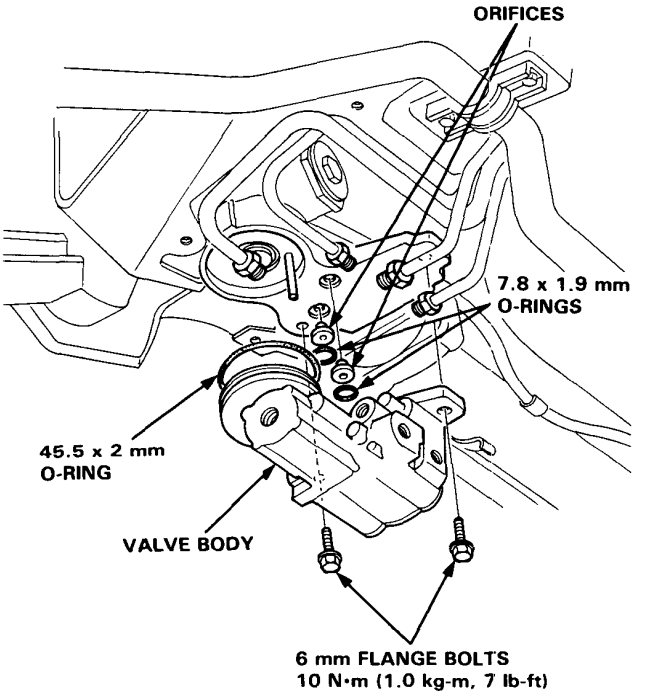

8. Connect the four lines to the control unit, using flare nut wrenches.

A: From pump: 14 mm wrench
38 N·m (3.8 kg-m, 28 lb-ft)
B: To speed sensor: 12 mm wrench
13 N·m (1.3 kg-m, 9 lb-ft)
C: To reservoir: 12 mm wrench
13 N·m (1.3 kg-m, 9 lb-ft)
D: To oil cooler: 17 mm wrench
29 N·m (2.9 kg-m, 20 lb-ft)

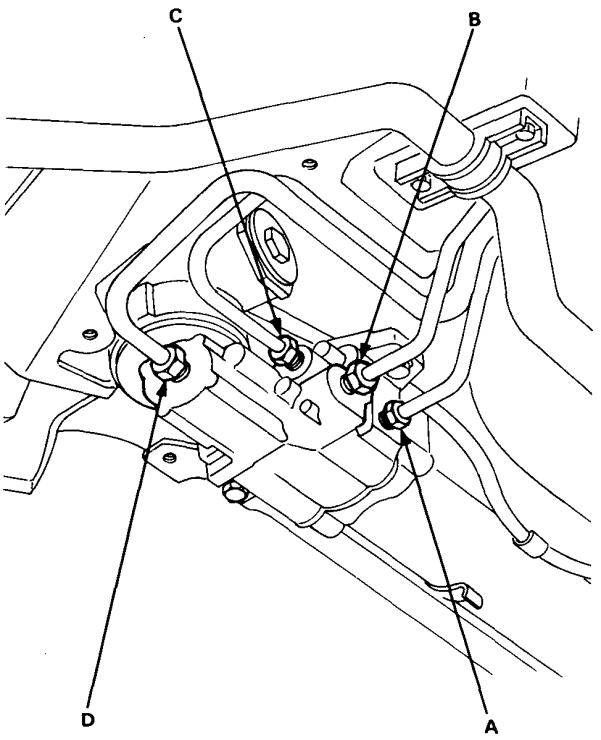

Removal

1. Remove the steering joint cover, and disconnect the steering shaft from the gearbox.

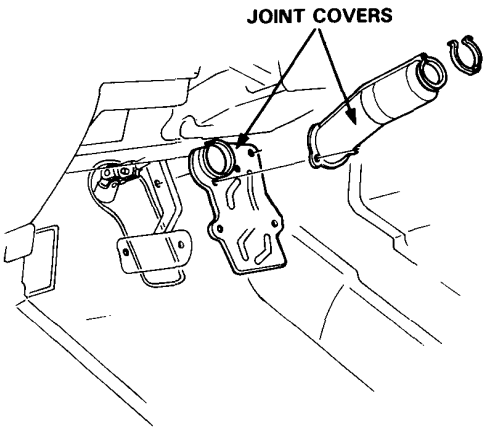

2. Drain the power steering fluid as described on page 11-9.

3. Remove the gearbox shield.

4. Using solvent and a brush, wash any oil and dirt off the control unit, its lines, and that end of the gearbox. Blow dry with compressed air.

5. Raise the front of car and support on safety stands in the proper locations.

6. Remove the front wheels.

7. Disconnect the tie rods form the steering knuckles using the special tool shown.

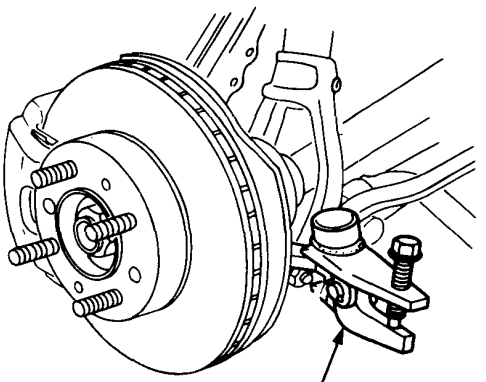

8-A. Manual transmission model only

- Remove the shift extension from the transmission case.

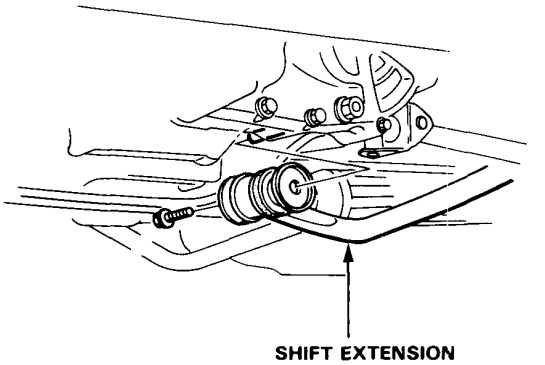

- Disconnect the gearshift rod from the transmission case by removing the 8 mm spring pin.

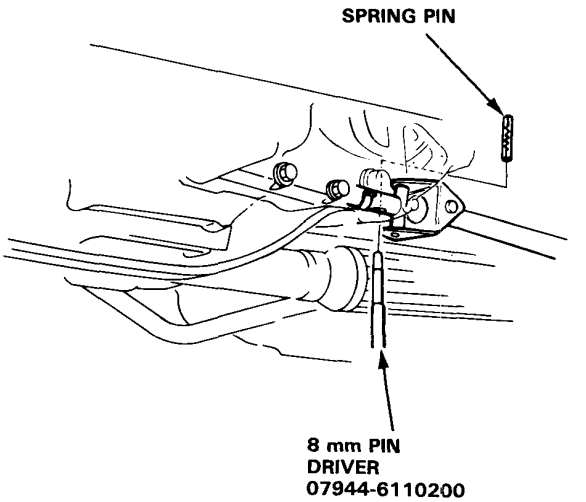

8-B. Automatic transmission only

- Remove the control cable from the clamp.

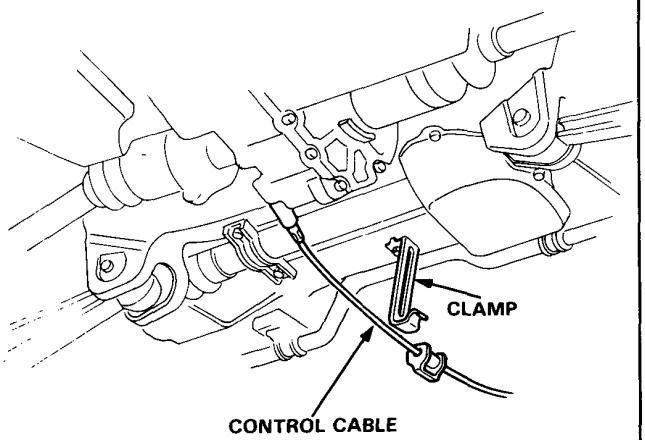

9. Remove the center beam bolts and center beam.
   NOTE: Replace the self-locking bolts if you can easily thread a nut past their nylon locking inserts.

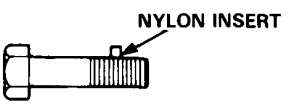

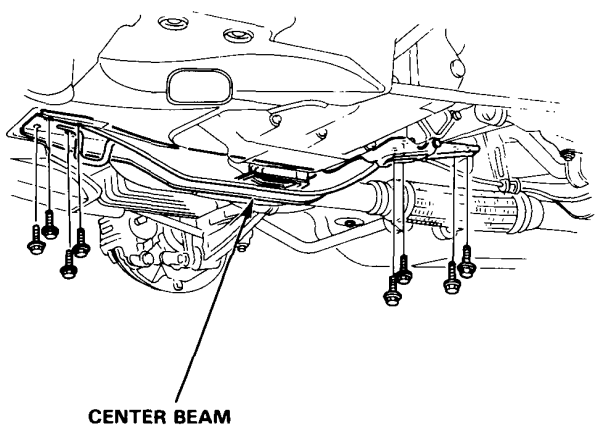

10. Disconnect the exhaust header pipe at the manifold.

    CAUTION: Replace the exhaust gasket and self-locking nuts when you reinstall the pipe.

11. Remove the exhaust header pipe joint nuts.

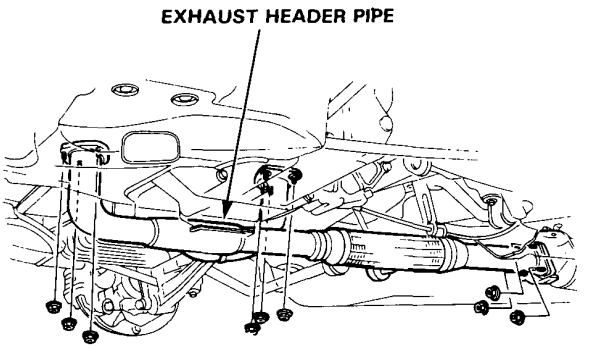

12. Disconnect the four lines from the control unit (page 11-25).

13. Slide the tie rod all the way to the right side.

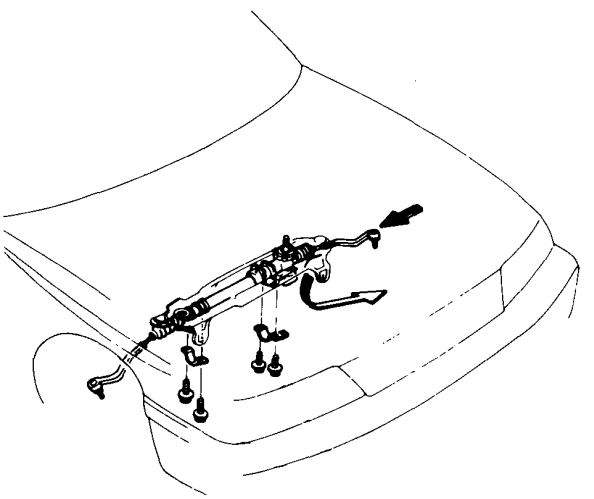

15. Slide the gear box right so that the left tie rod clears the bottom of the rear beam, then remove the gear box.

Overhaul

1. Remove the control unit as described on page 11-25.

2. Carefully clamp the gearbox in a vise.

3. Loosen the bands, pull the boots away from the ends of the gearbox, and unbend the tie-rod lock washers.
   Hold the rack with a 22 mm wrench, and unscrew the tie-rods with a 17 mm wrench.

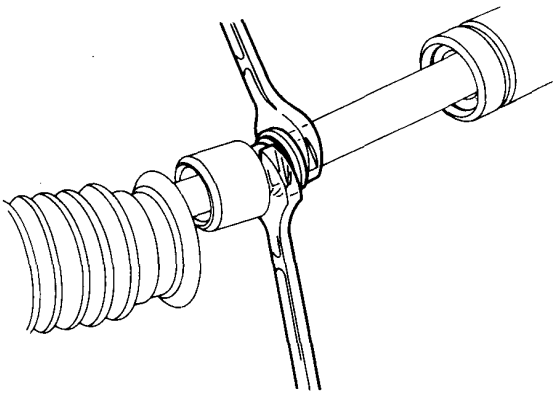

4. Push the right end of the rack back into the cylinder housing so the smooth surface that rides against the seal won't be damaged.

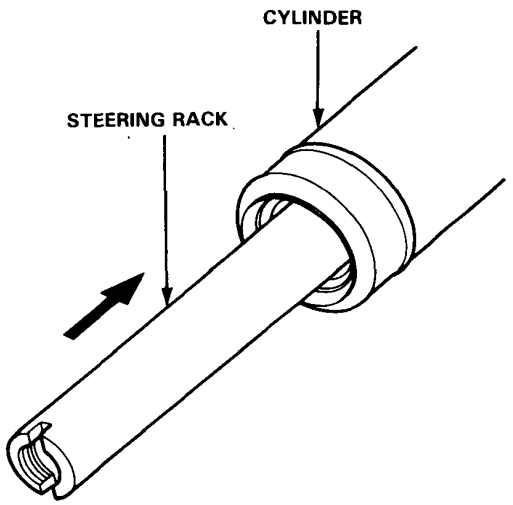

5. Loosen the rack screw lock nut, and remove the rack guide screw.

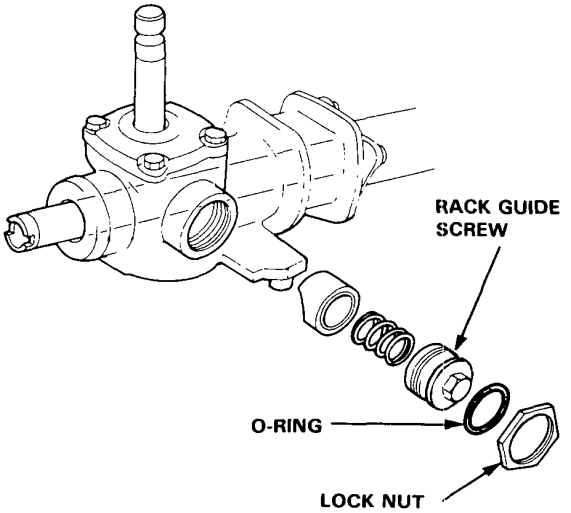

6. Remove the 28 mm snap ring from the bottom of the gear housing.

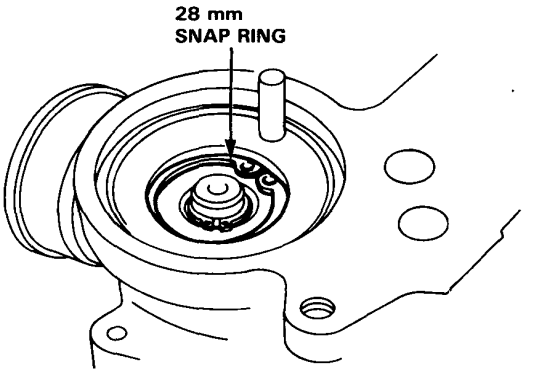

7. Remove the pinion from the gear housing by tapping it lightly.

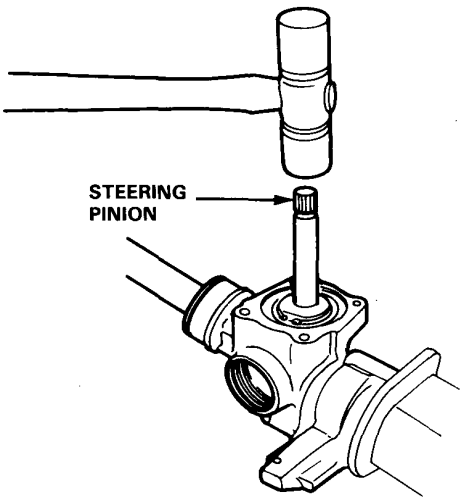

8. Check the pinion lower ball bearing for play.

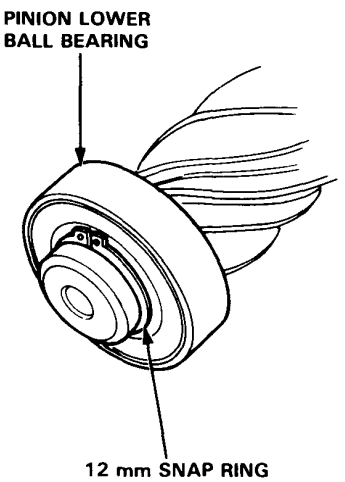

9. If the bearing is noisy or has excessive play, remove the 12 mm snap ring and remove the bearing using a commercially available bearing puller.

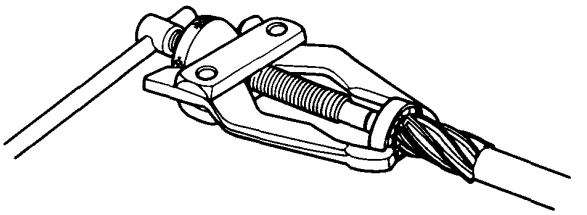

10. Remove the four bolts from the end of cylinder housing, then slide the housing off the rack.

11. Remove the cylinder housing.

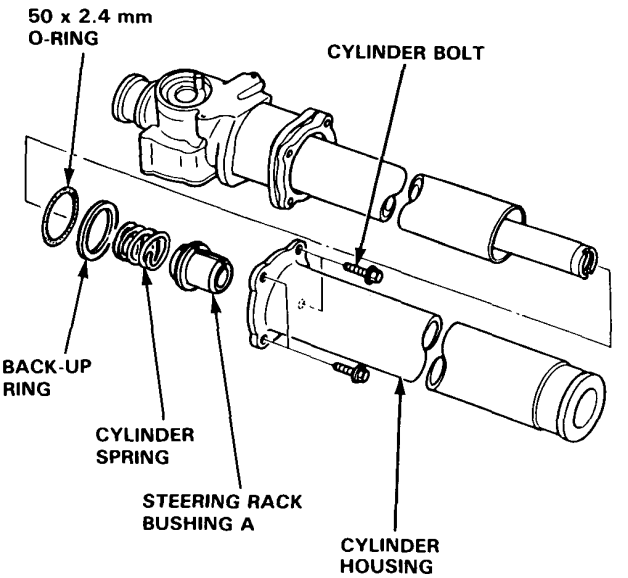

12. Remove the O-ring, back-up ring, steering rack bushing A and cylinder spring.

(cont'd)

Overhaul (cont'd)

13. Remove the cylinder end seal from the cylinder housing.
    Use your fingers or a wooden stick to avoid damaging the housing.

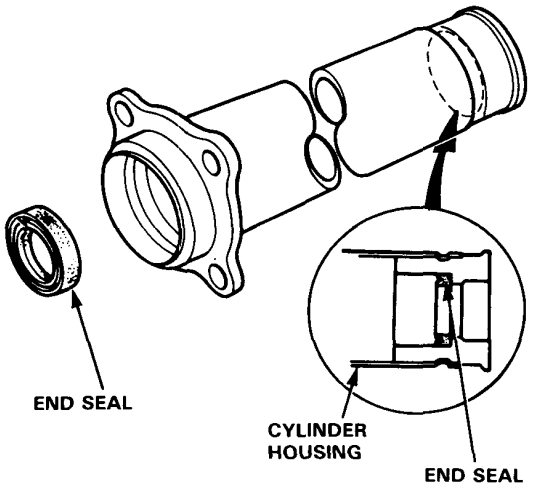

14. Remove the cylinder, cylinder seal retainer, cylinder cap and steering rack from the gear housing.

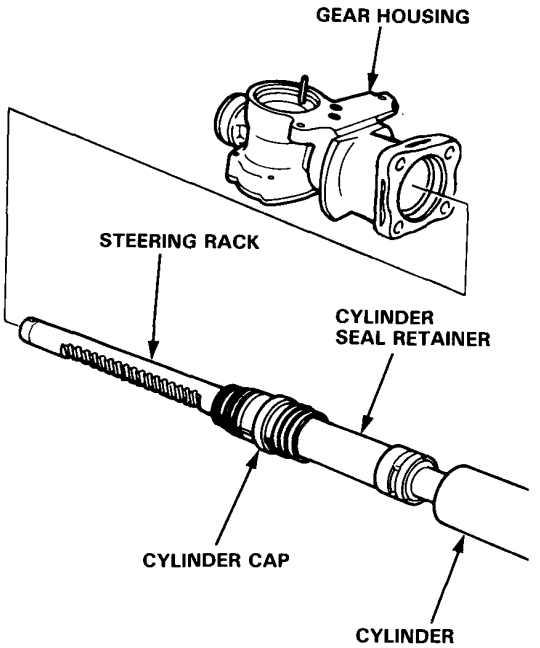

15. Remove the retainer washer from the gear housing.

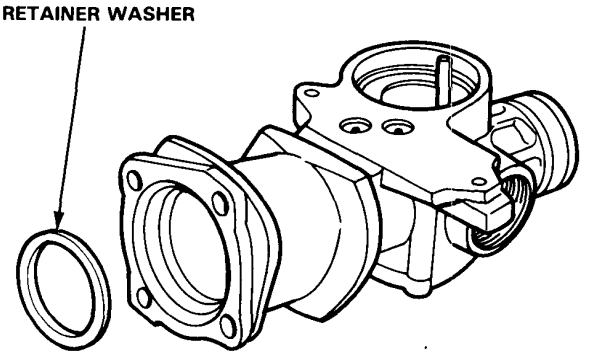

16. Remove the gear housing cap from the gear housing by removing the four 6 mm flange bolts.

17. Remove the steering pinion seal from the gear housing cap.

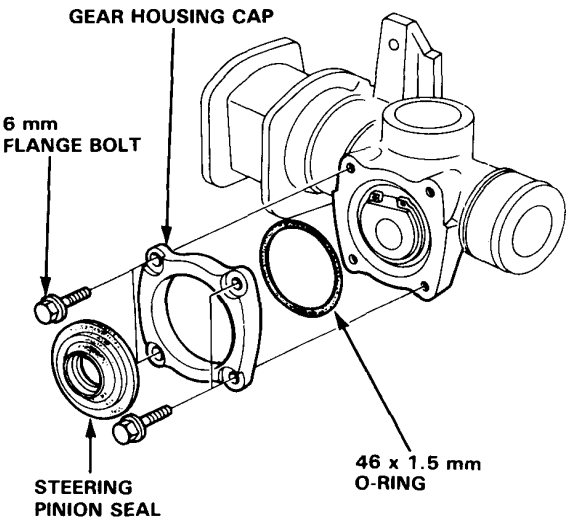

18. Remove the O-ring from the gear housing.

19. Check the upper bearing for faulty movement and excessive play; if it is good and the grease in it is clean, go on step 20.
If it is damaged, or if dirt has gone past the seal into the grease, replace the bearing.

- Remove the 30 mm snap ring from the pinion holder.

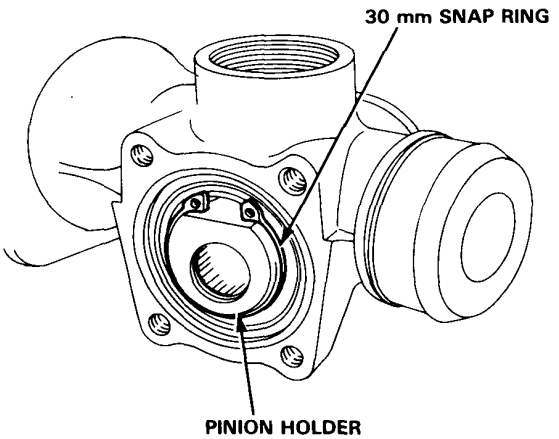

- Remove the pinion holder from the gear housing.

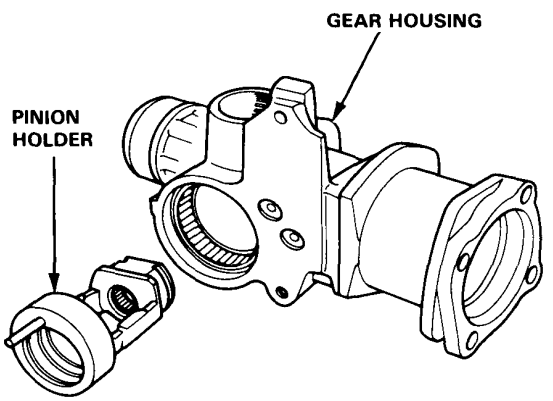

- Remove the pinion upper ball bearing from the gear housing.

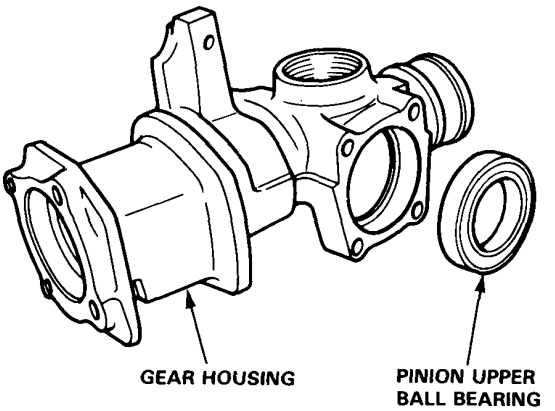

- Check the needle roller bearings in the pinion holder and in the gear housing for damage; if they are OK, pack them with grease. If the bearings are damaged, replace them as a set.

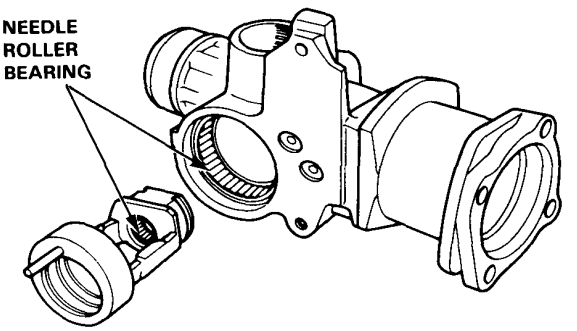

(cont'd)

Overhaul (cont'd)

- Pack a new upper bearing with grease, then drive the bearing into the gear housing with its sealed side facing out.

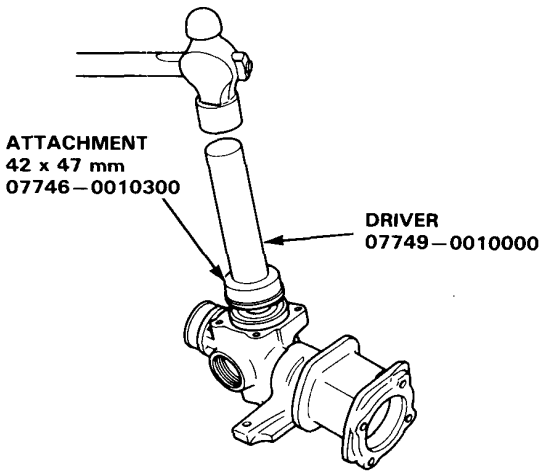

- Install the pinion holder in the gear housing.

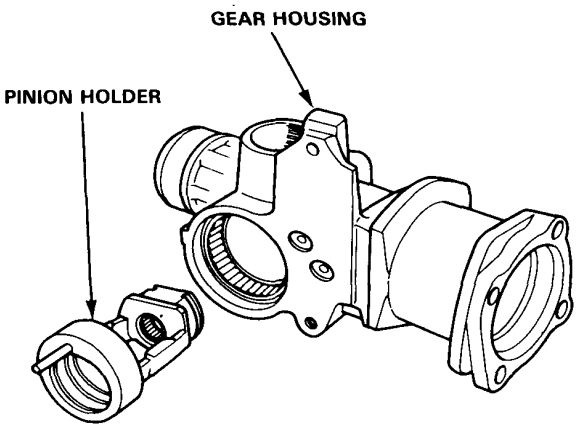

- Reinstall the 30 mm snap ring with its tapered side facing out.

NOTE: Snap ring ends must be aligned with the flat area.

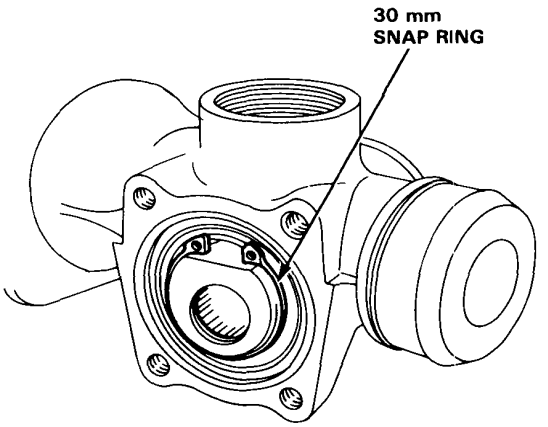

20. Remove the cylinder and seal retainer from the steering rack.

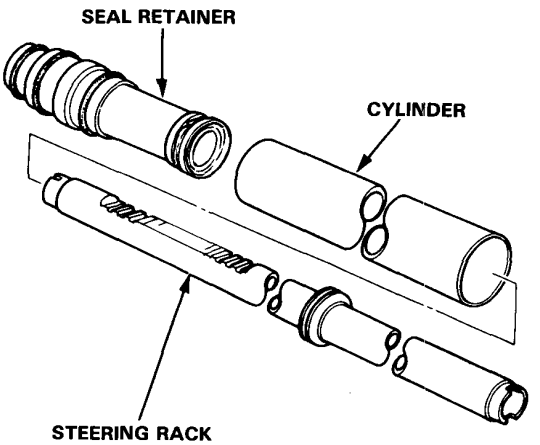

21. Remove the O-ring and circlip from the seal retainer, then remove the cylinder cap from the seal retainer.

22. Remove the O-rings from the cylinder cap.

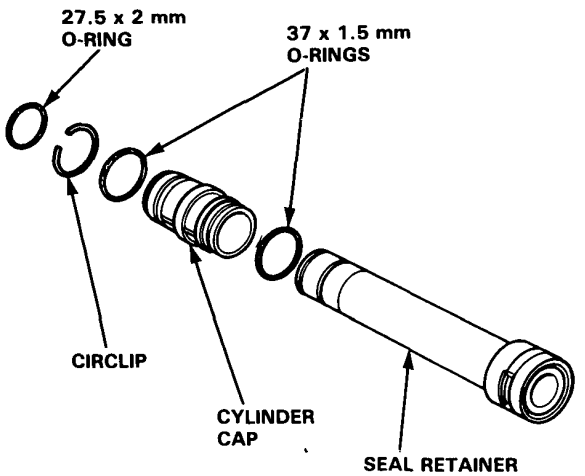

23. Remove the bushing clamp from the seal retainer, and then remove the rack bushing.

24. Remove the cylinder end seal.

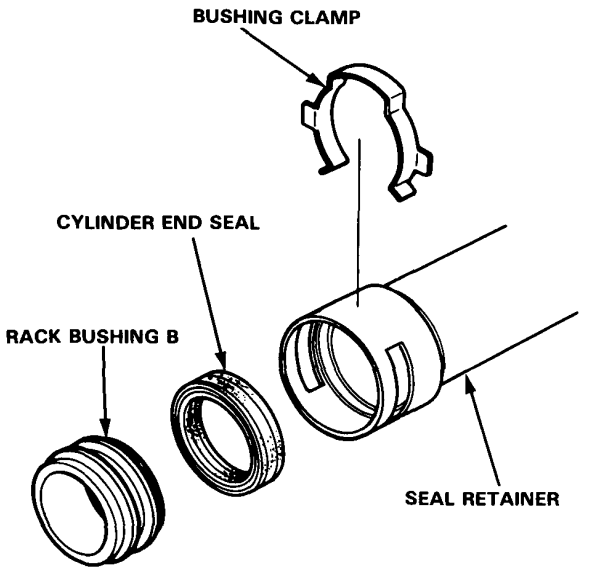

25. Carefully pry the piston seal ring and O-ring off the rack.

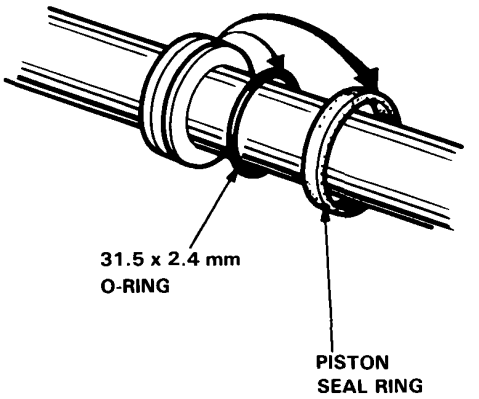

NOTE: Before reassembling any parts, inspect them as described on page 11-24, and make sure they are clean. Replace worn or damaged parts.

26. Install a new O-ring on the rack with its narrow edge facing out.

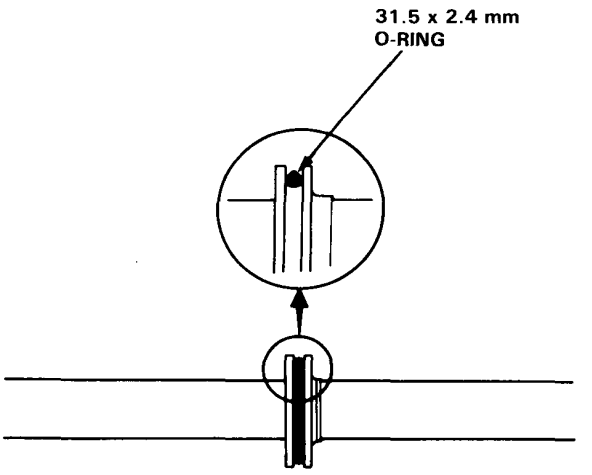

(cont'd)

Overhaul (cont'd)

27. Coat the pinion seal ring guide with power steering fluid, and slide it onto the rack, big end first.

28. Position the new piston seal ring on the guide tool, slide it down to the big end of the tool, and then pull it off into the piston groove on top of the O-ring.

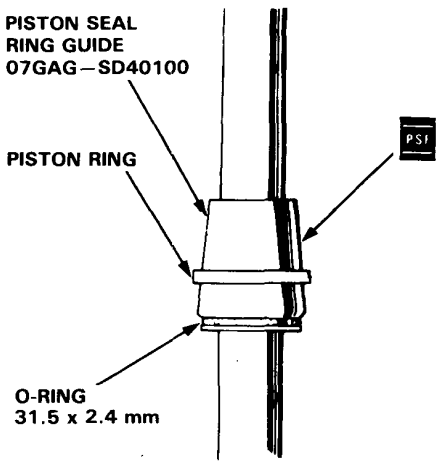

29. Coat the piston seal ring and inside of the sizing tool with power steering fluid.
Carefully slide the tool onto the rack and over the piston ring, then rotate the tool as you move it up and down to seat the piston ring.

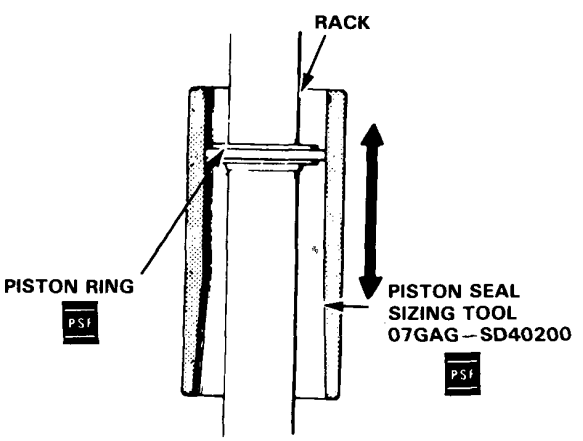

30. Coat new O-rings with grease and install them on the cylinder cap.

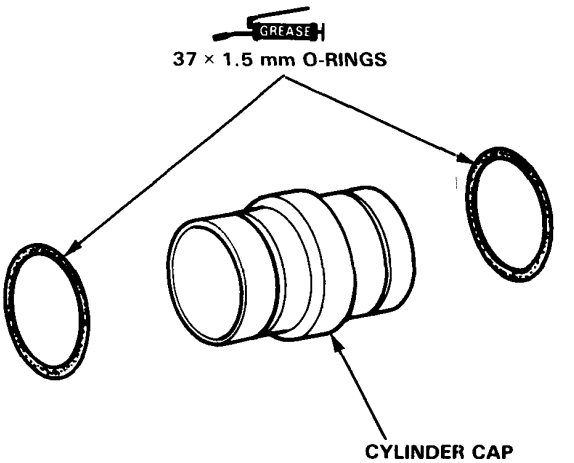

31. Slide the cylinder cap onto the seal retainer.

32. Install the circlip and O-ring on the seal retainer.

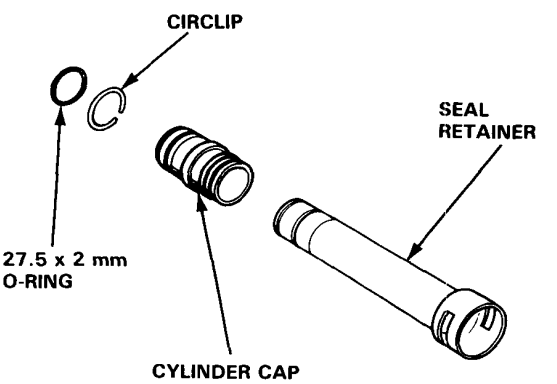

33. Grease the sliding surface of the steering rack bushing B, and install the bushing on the steering rack with the groove of the bushing facing the steering rack piston.

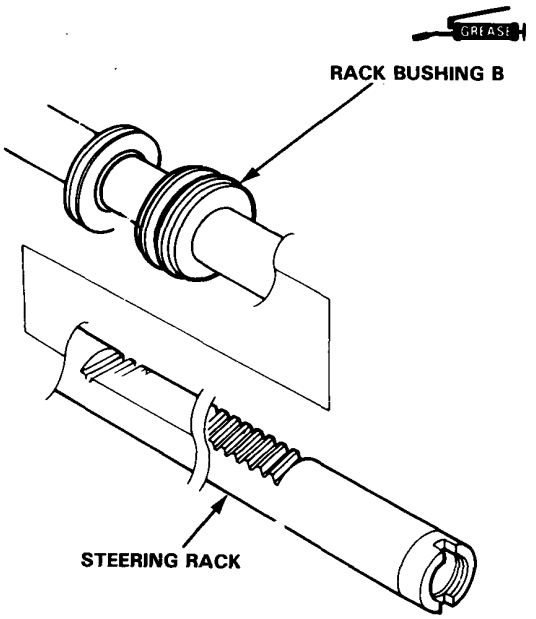

34. Grease the sliding surfaces of the new cylinder end seal and cylinder end seal slider, then set the seal on the seal slider with its grooved side facing opposite the slider.

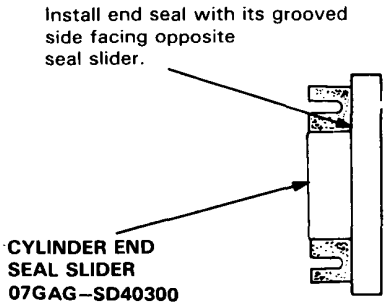

35. Grease the steering rack, and install the cylinder end seal.

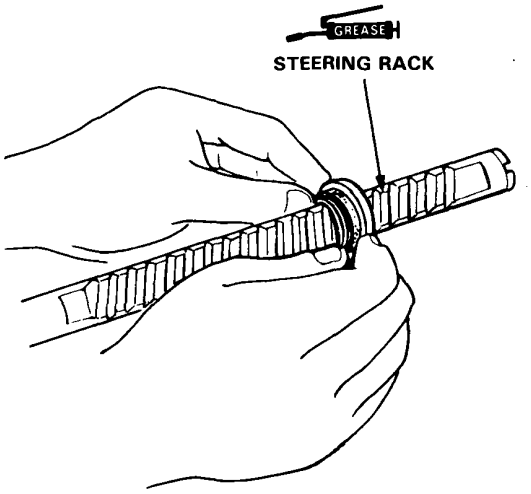

36. Remove the guide tool from the cylinder end seal, then separate the ends of the tool and remove it from the rack.

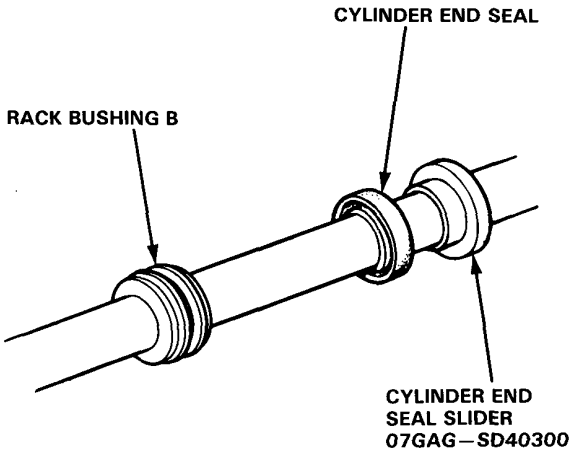

(cont'd)

Overhaul (cont'd)

37. Fit the seal retainer on the steering rack.

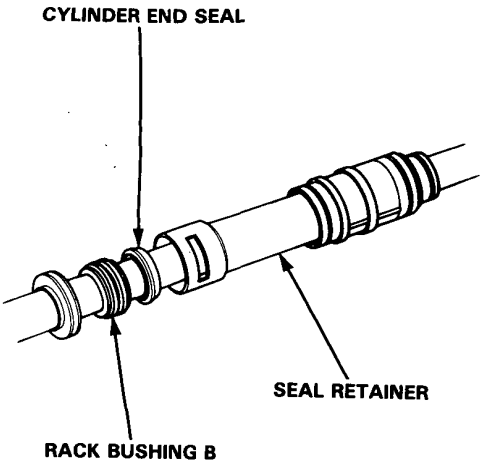

38. Push the rack bushing B toward the seal retainer by hand until the cylinder end seal seated in the retainer. Fit the bushing clamp in the groove of the seal retainer securely.

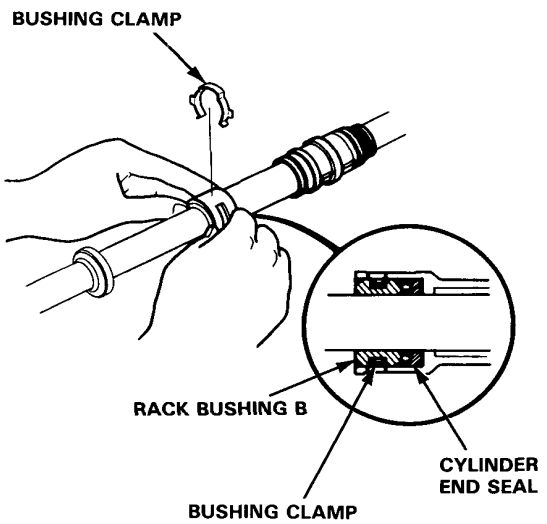

39. Install the retainer washer on the gear housing.

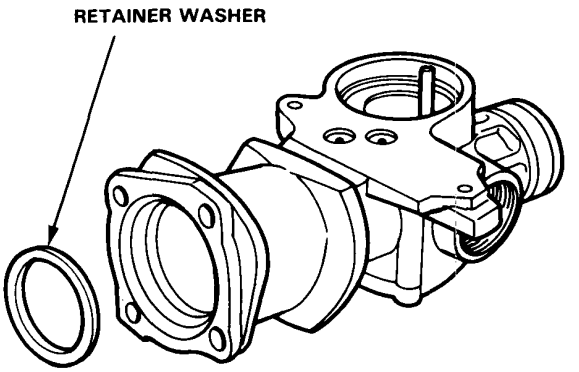

40. Place the gear housing on the work bench and insert the seal retainer and steering rack into the gear housing.

41. Coat the inside surface of the cylinder with power steering fluid, slide it over the rack and into the gear housing; press it into the housing until it seats.

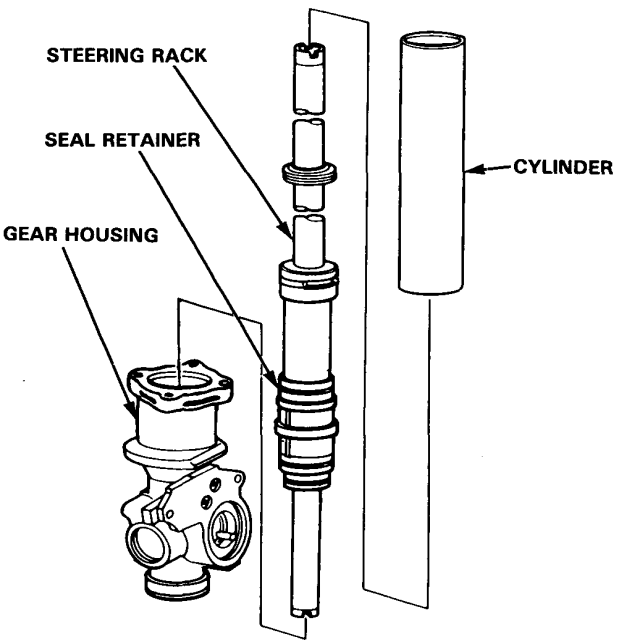

42. Install the cylinder spring over the rack, then coat the rack bushing A with power steering fluid and install it on the spring.

43. Grease the end guide and slip it onto the end of the steering rack.

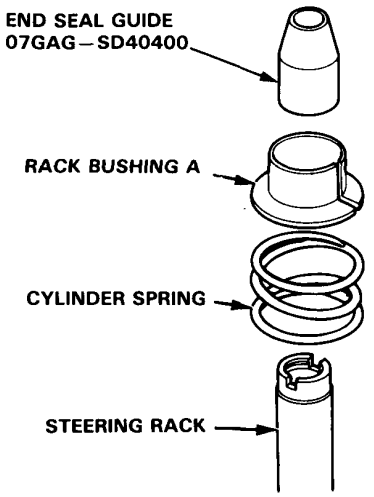

44. Coat the inside surface of the cylinder with power steering fluid and install the cylinder end seal with its groove side facing out.

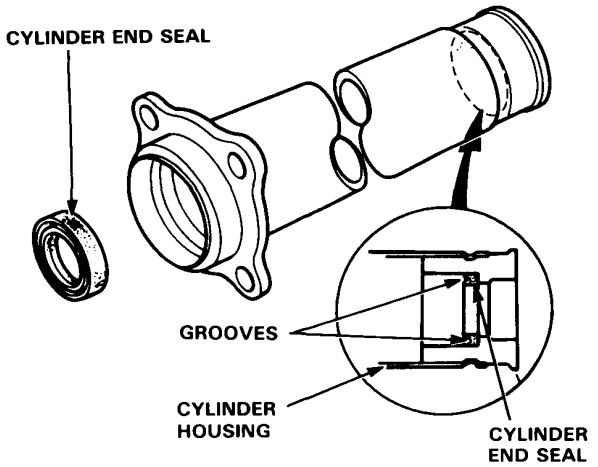

45. Install the O-ring and back-up ring on the gear housing.

46. Carefully install the cylinder on the gear housing and loosely install with four bolts.

CAUTION: Be careful not to damage the end seal in the cylinder housing.

47. Remove the end seal guide from the steering rack.

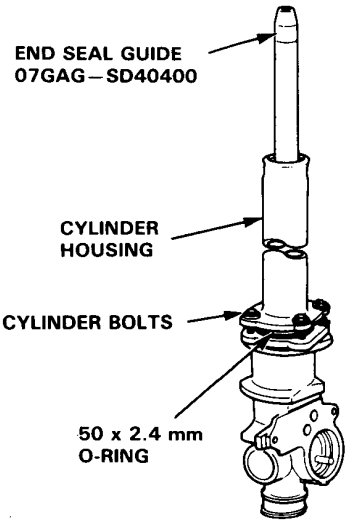

48. Insert the steering rack into the cylinder housing being careful not to damage the steering rack sliding surface.

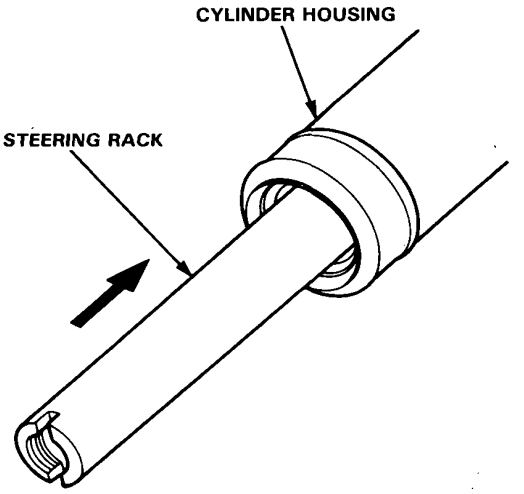

(cont'd)

Overhaul (cont'd)

49. Tighten the cylinder housing to the gear housing with four bolts.

    NOTE: Before tightening the bolts, make sure the mating surfaces of the cylinder and gear housings fit properly by pushing them together; hold them together while tightening the bolts.

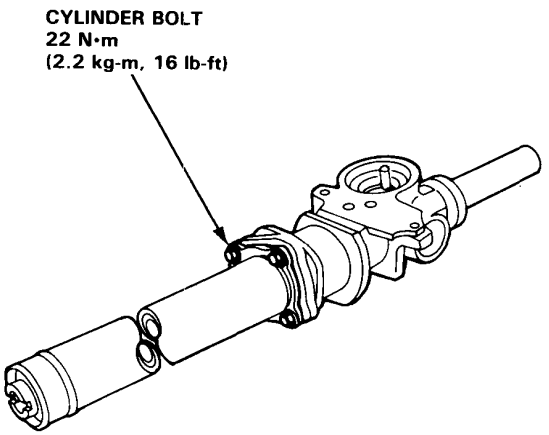

50. Press the lower ball bearing onto the pinion with its shielded side facing down.

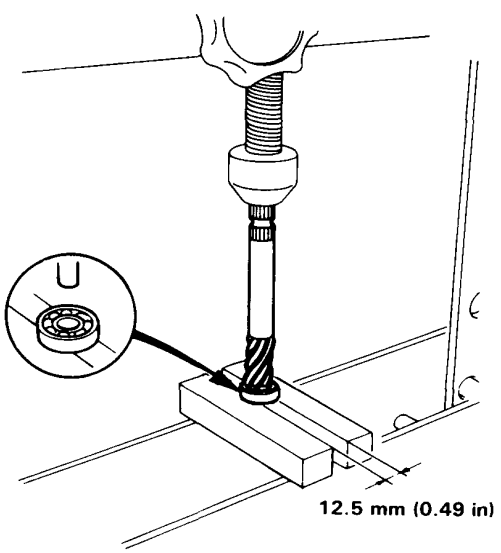

51. Install the 12 mm snap ring on the steering pinion.

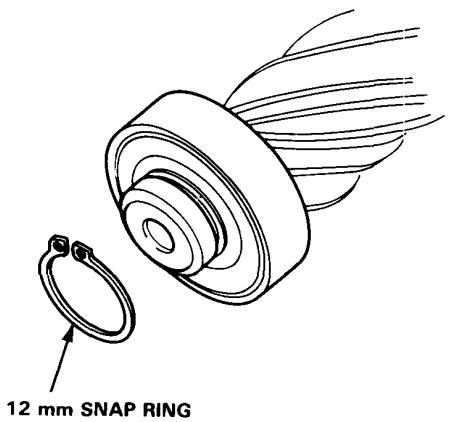

53. Install the steering pinion in the pinion holder.

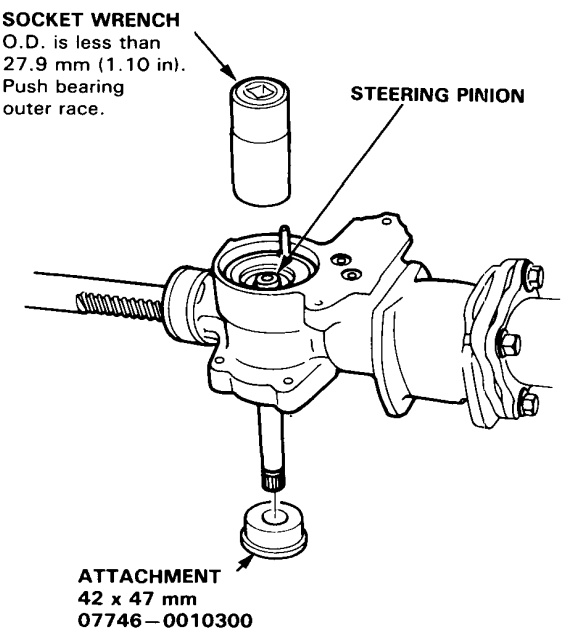

54. Install the 28 mm snap ring securely in the pinion holder groove.

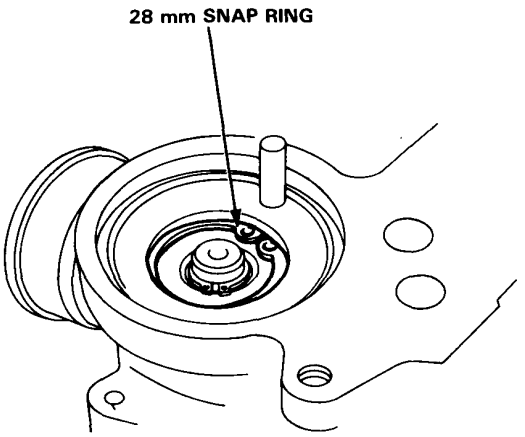

55. Grease the steering pinion seal, and install it on the gear housing using the special tools.

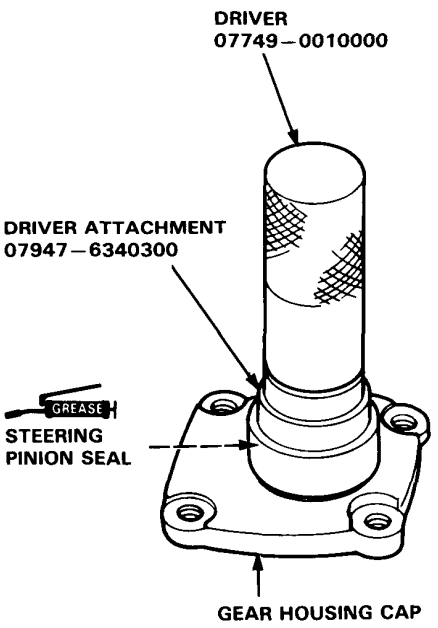

56. Grease the new O-ring and install it in the groove in the gear housing cap.

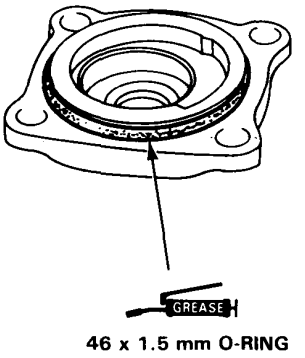

57. Grease the special tool and fit it over the steering pinion.

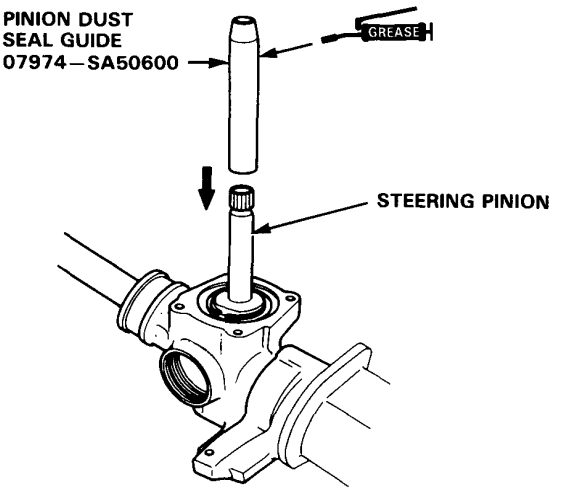

(cont'd)

Overhaul (cont'd)

58. Install the gear housing cap being careful not to damage or distort the lip of the seal, or dislodge the seal spring.

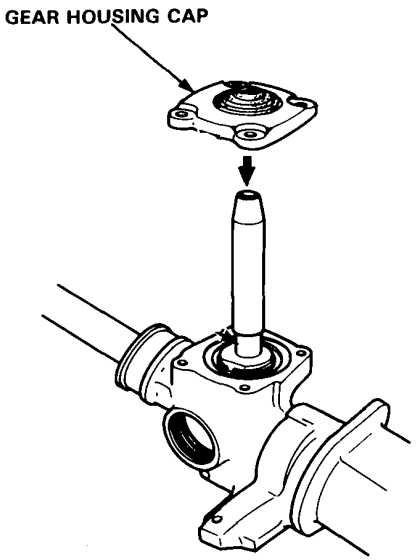

59. Remove the special tool.

60. Tighten the four gear housing cap bolts.

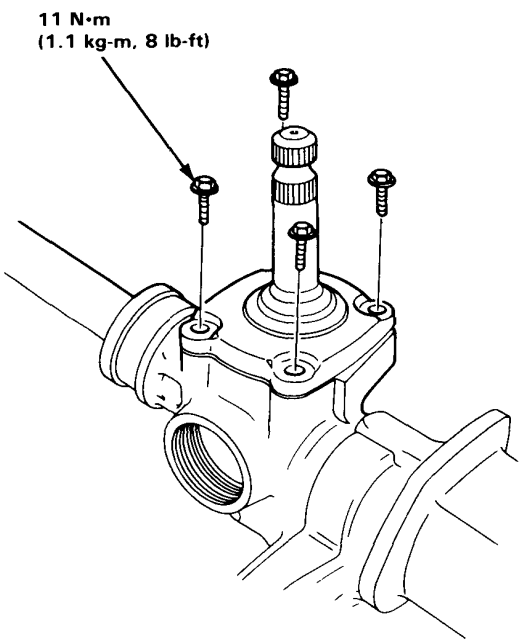

61. Install the control valve unit on the gear housing.

62. Coat the rack guide with grease.

63. Install the rack guide, spring and rack guide screw on the gear housing.

NOTE: Apply locking agent to the rack guide screw threads.

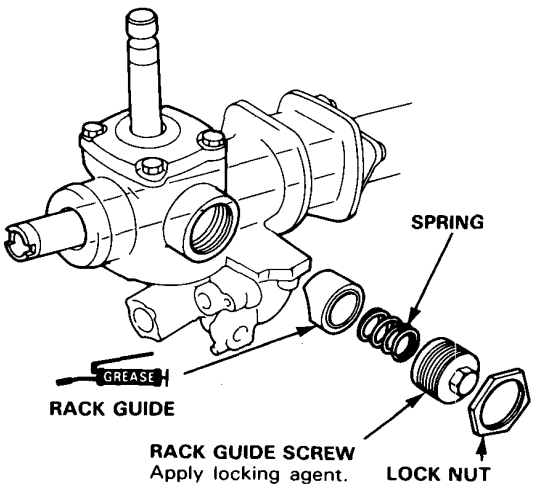

64. Tighten the rack guide screw until it compresses the spring and seats against the rack guide, then loosen it.
Retighten it to 3 N•m (0.3 kg-m, 2 lb-ft), back off about 25° and install the lock nut on the rack guide screw.

65. Tighten the lock nut while holding the rack guide screw with the lock nut wrench.

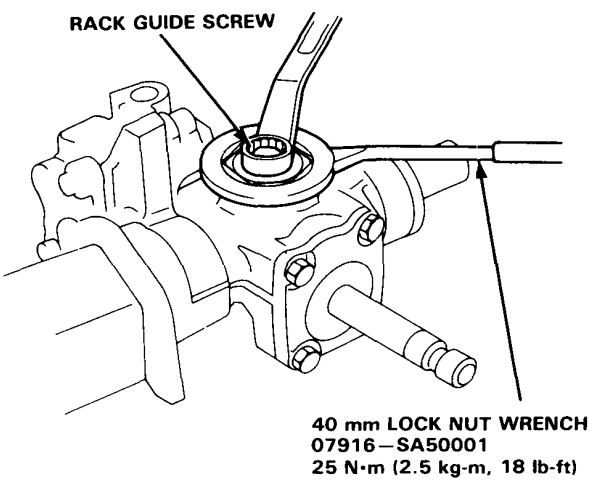

66. Screw each tie rod into the rack while holding the lock washer so its tabs are in the slots in the rack end.

NOTE: Install the stopper washer with the chamfered side facing out.

67. Tighten the tie rod securely, then bend the lock washer back against the flat on the flange as shown.

68. Install the boots and secure with boot band and tube clamp.

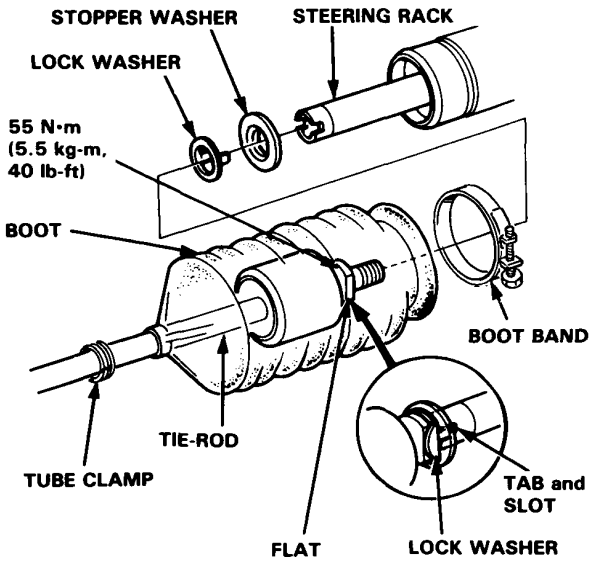

69. Install the air transfer hose and clamp with transfer clips as shown.

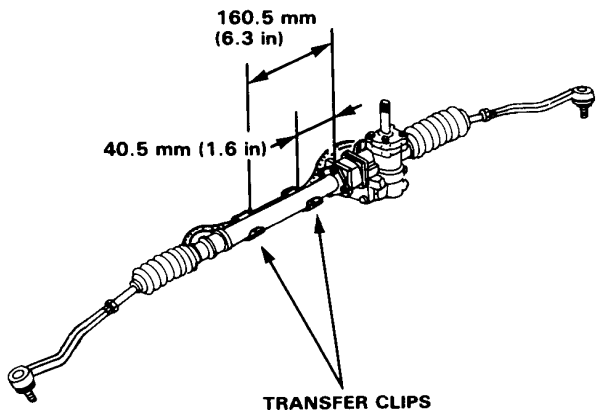

Installation

1. Reinstall the gear box in the reverse order of removal.

2. Tighten the gear box mounting bolts.

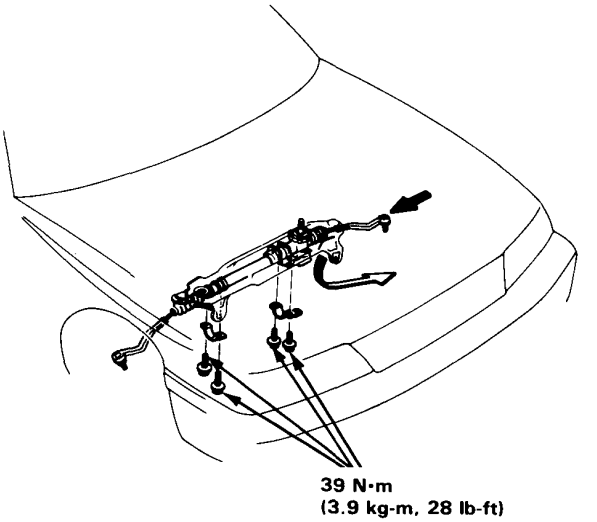

3. Connect the fluid lines to the control unit (page 11-25).

A: From pump: 14 mm wrench
38 N·m (3.8 kg-m, 28 lb-ft)
B: To speed sensor: 12 mm wrench
13 N·m (1.3 kg-m, 9 lb-ft)
C: To reservoir: 12 mm wrench
13 N·m (1.3 kg-m, 9 lb-ft)
D: To oil cooler: 17 mm wrench
29 N·m (2.9 kg-m, 20 lb-ft)

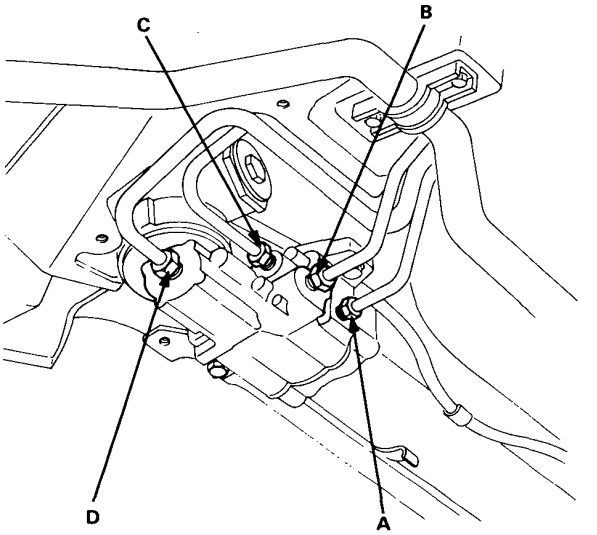

(cont'd)

66. Screw each tie rod into the rack while holding the lock washer so its tabs are in the slots in the rack end.

NOTE: Install the stopper washer with the chamfered side facing out.

67. Tighten the tie rod securely, then bend the lock washer back against the flat on the flange as shown.

68. Install the boots and secure with boot band and tube clamp.

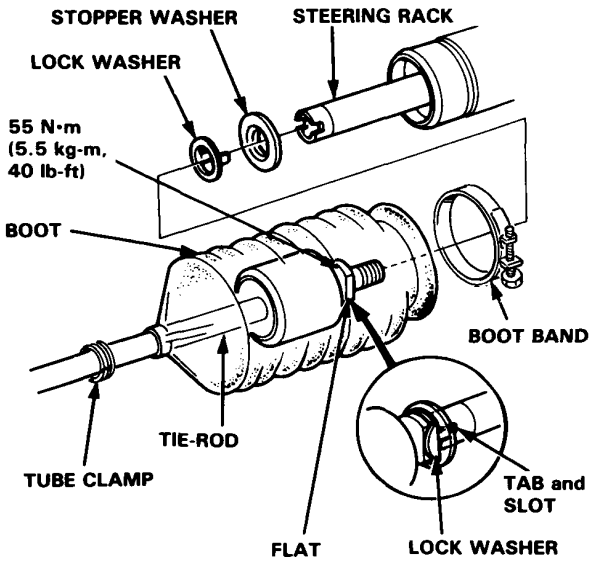

69. Install the air transfer hose and clamp with transfer clips as shown.

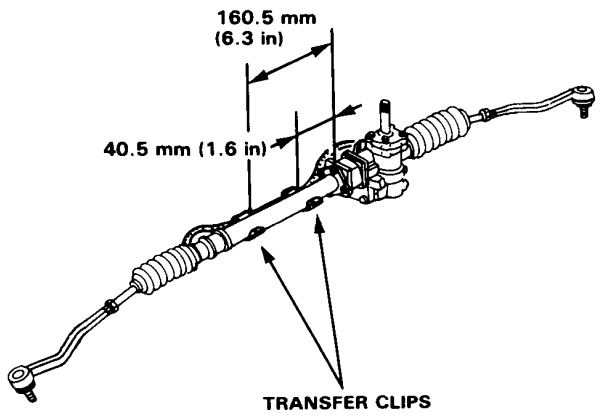

Installation

1. Reinstall the gear box in the reverse order of removal.

2. Tighten the gear box mounting bolts.

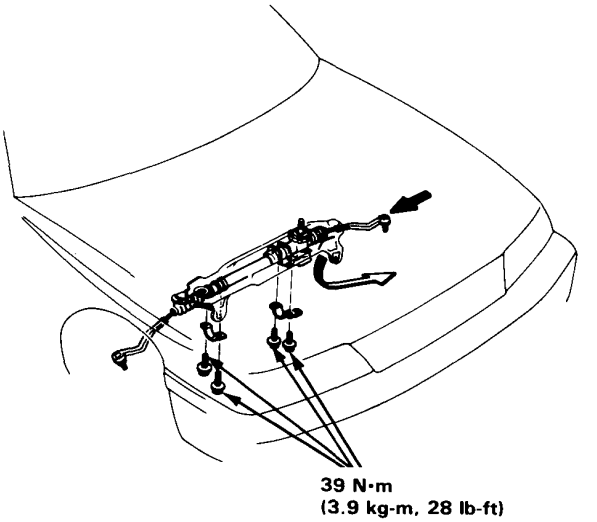

3. Connect the fluid lines to the control unit (page 11-25).

A: From pump: 14 mm wrench
38 N·m (3.8 kg-m, 28 lb-ft)
B: To speed sensor: 12 mm wrench
13 N·m (1.3 kg-m, 9 lb-ft)
C: To reservoir: 12 mm wrench
13 N·m (1.3 kg-m, 9 lb-ft)
D: To oil cooler: 17 mm wrench
29 N·m (2.9 kg-m, 20 lb-ft)

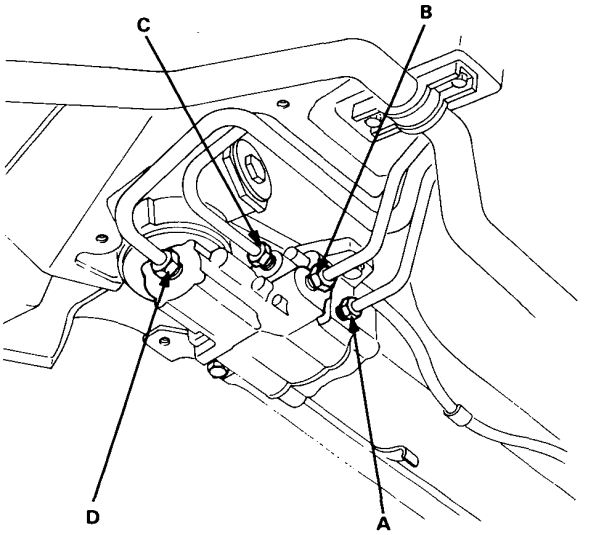

(cont'd)

Installation (cont'd)

4. Install the header pipe with new gasket, and new self-locking nuts.

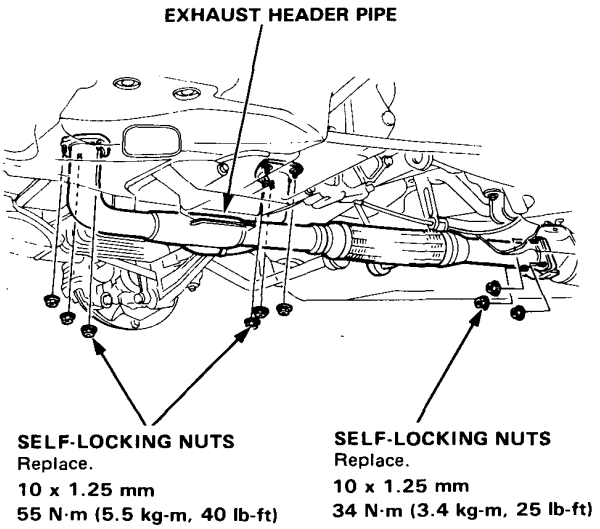

5. Install the center beam and tighten the bolts.

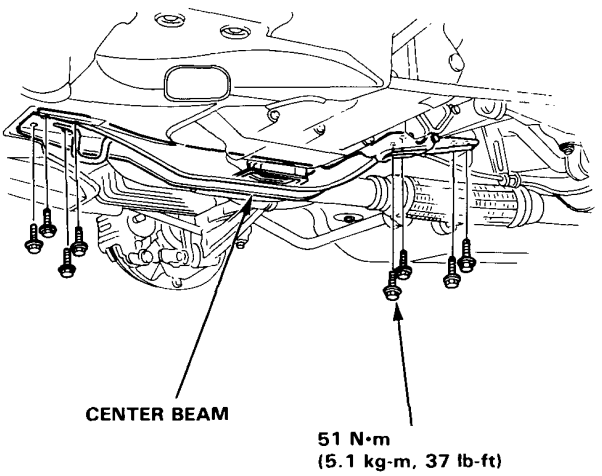

6-A. Manual transmission model only.

- Install the shift extension to the transmission case.

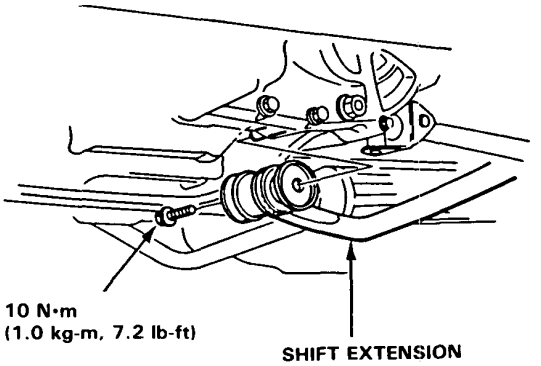

- Connect the shift rod to the transmission case using the 8 mm spring pin.

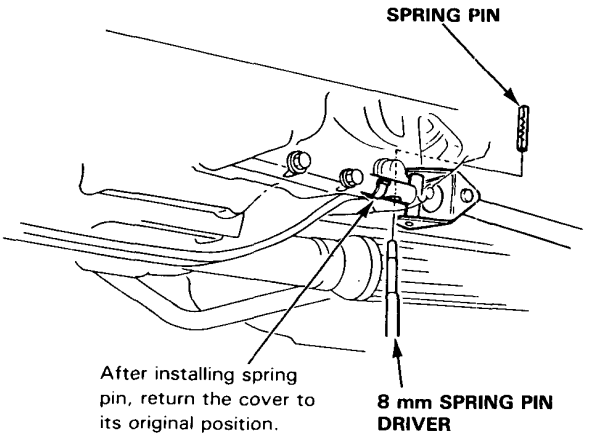

6-B. Automatic transmission model only.

- Secure the control cable with the clamp.

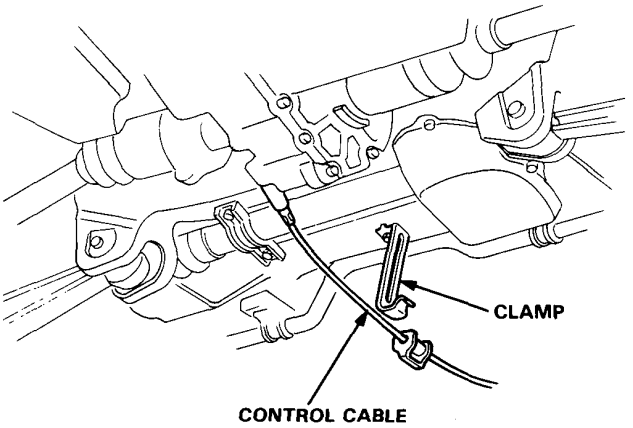

7. Reconnect the tie rods to the steering knuckles, tighten the castle nuts to specified torque, and install new cotter pins.

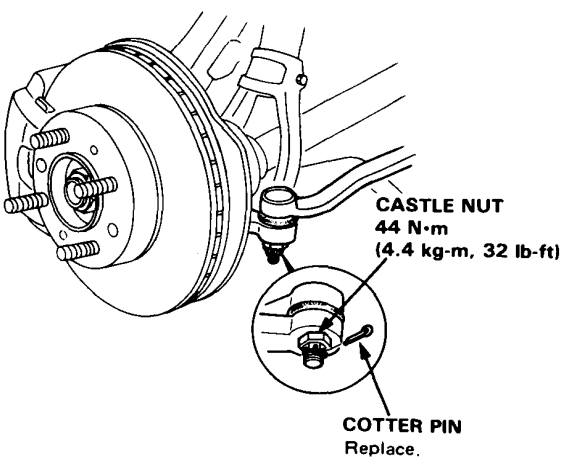

8. Reconnect the steering shaft to the gear box. Tighten the steering joint bolts to 22 N·m (2.2 kg-m, 16 lb-ft).
CAUTION: Before tightening the steering joint bolts, pull up the steering joint to make sure that the steering joint is not pulled out.

9. Install the steering joint cover.

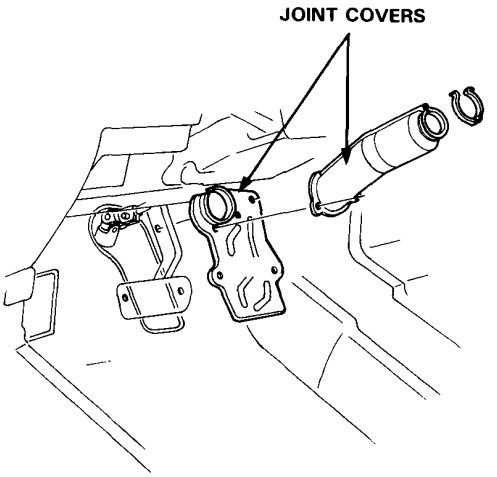

10. Fill the system:

- Fill the reservoir with new Honda Power Steering Fluid.
- Start the engine and let it run at fast idle, then turn the steering wheel from lock-to-lock several times to bleed air from the system.
- Check the fluid again, and add more if necessary.

11. Check the gearbox for leaks, then reinstall the shield.

12. Reinstall the front wheels.

Ball Joint Boot Installation

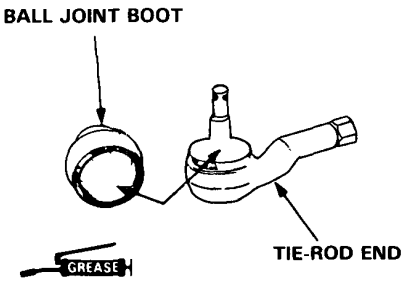

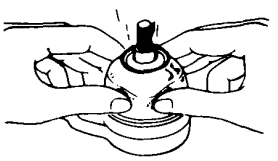

AIR-BLEEDING

Install the circlip on the Clip Guide adjust the boot height with the bolt, and press the clip down onto the boot.

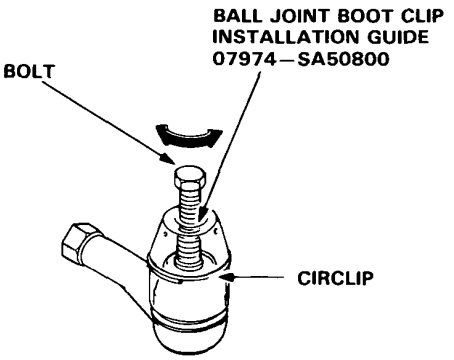

Special Tools

Ref. No.	Tool Number	Description	Q'ty	Remarks
①	07GAK—SD40101	Wheel Alignment Gauge Attachment C	1	
②	07941—6920003	Ball Joint Remover	1	
③	07GAF—SD40700	Hub disassembly Base	1	
④	07GAF—SD40100	Hub Assembly Pin	1	
⑤	07749—0010000	Driver	1	
⑥	07746—0010500	Attachment, 62 x 68 mm	1	
⑦	07965—6920201	Hub Disassembly Tool B	1	
⑧	07GAF—SE00401	Front Hub Base	1	
⑨	07HAD—SG00100	Bearing Driver Attachment	1	
⑩	07GAF—SD40200	Hub Assembly Driver Attachment	1	
⑪	07GAF—SD40300	Ball Joint Disassembly Tool Kit	1	
⑪-1	07GAF—SD40310	Ball Joint Remover Base	1	
⑪-2	07GAF—SD40320	Ball Joint Installer Base	1	
⑪-3	07GAF—SD40330	Ball Joint Remover/Installer	1	
⑫	07GAG—SD40700	Ball Joint Boot Clip Installation Guide	1	
⑬	07974—SA50800	Ball Joint Boot Clip Installation Guide B	1	
⑭	07GAE—SE00101	Shock Absorber Spring Compressor	1	
⑮	07GAC—SE00100	Ball Joint Remover	1	

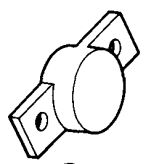
①

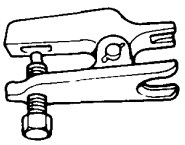
②

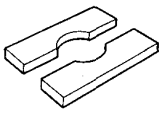
③

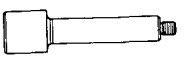
④

⑤

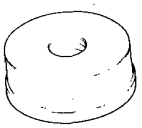
⑥

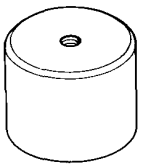
⑦

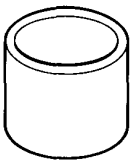
⑧

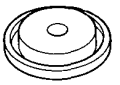
⑨

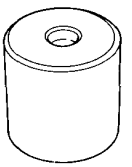
⑩

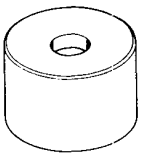
⑪-1

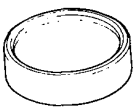
⑪-2

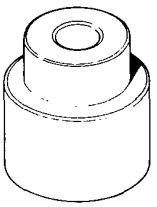
⑪-3

⑫ ⑬

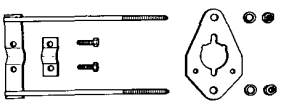
⑭

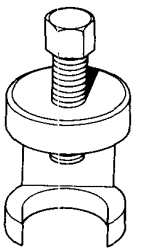
⑮

Index

Front Suspension:

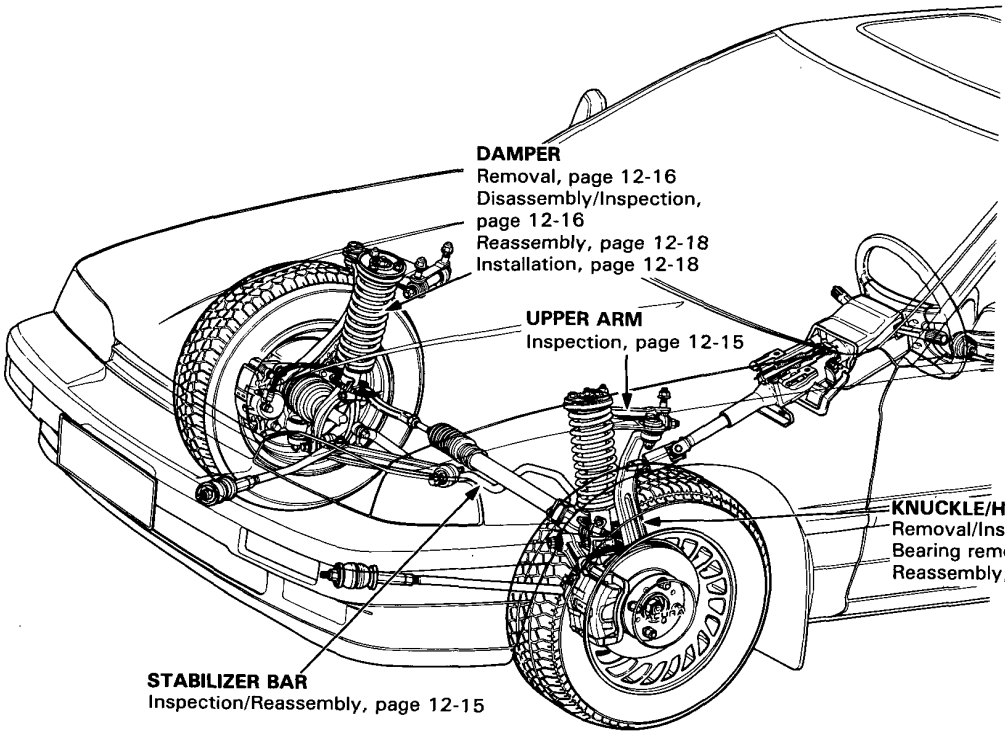

Rear Suspension:

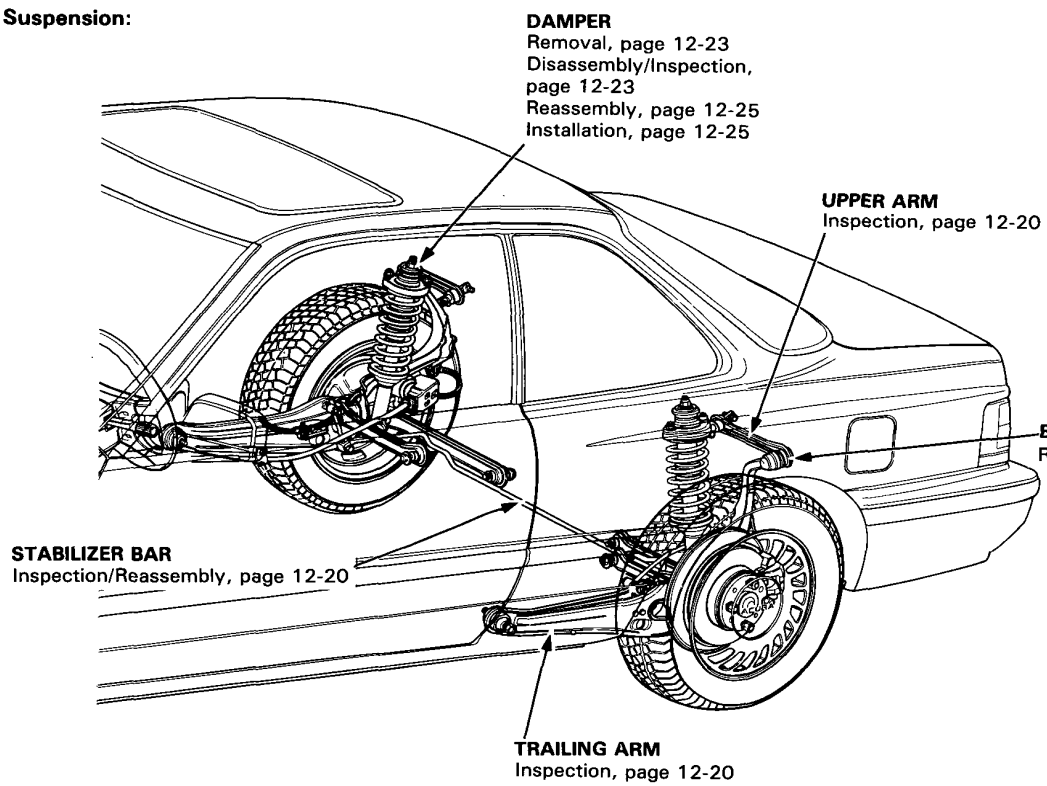

Wheel Alignment

Front Wheel Toe Inspection/ Adjustment

NOTE: Check tires for proper inflation before inspection and adjustment.

1. Center the steering wheel spokes.

   NOTE: Measure the difference in toe measurements with the wheels pointed straight ahead.

   Front toe-in: 0 ± 3 mm (0 ± 0.12 in.)

   — If adjustment is required, go to step 2.

   — If no adjustment is required, remove alignment equipment.

2. Loosen the tie-rod locknuts and turn both tie-rods in the same direction until the front wheels are in straight ahead position.

3. Turn both tie-rods equally until the toe reading on the turning radius gauge is correct.

4. After adjusting, tighten the tie-rod locknuts.

   NOTE: Reposition the tie-rod boot if twisted or displaced after adjustment has been made.

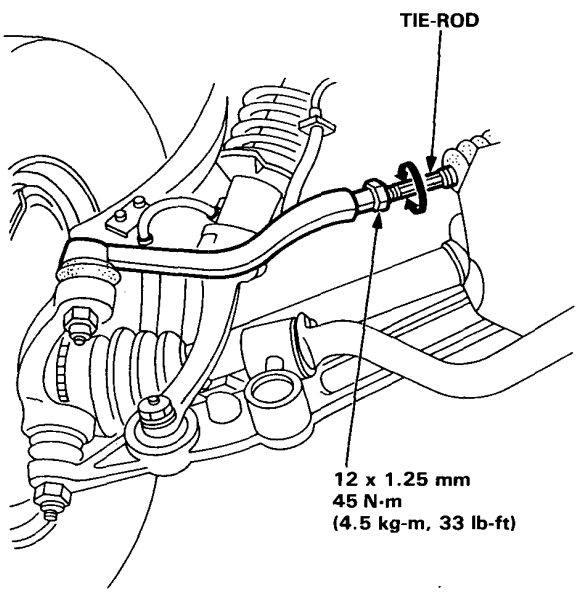

Rear Wheel Toe Inspection/ Adjustment

1. Release parking brake.

   NOTE: If the parking brake is engaged, you may get an incorrect reading.

   Rear toe in: 0 ± 2 mm (0 ± 0.08 in)

   — If adjustment is required, go to step 2.

   — If no adjustment is required, remove alignment equipment.

2. Hold the adjusting bolt on the rear lower arm A and loosen the locknut.

3. Adjust the rear toe by turning the adjusting bolt until toe is correct.

4. Install a new locknut and tighten while holding the adjusting bolt.

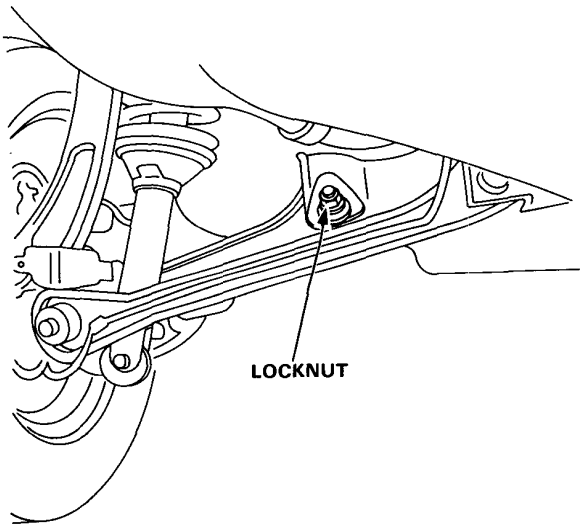

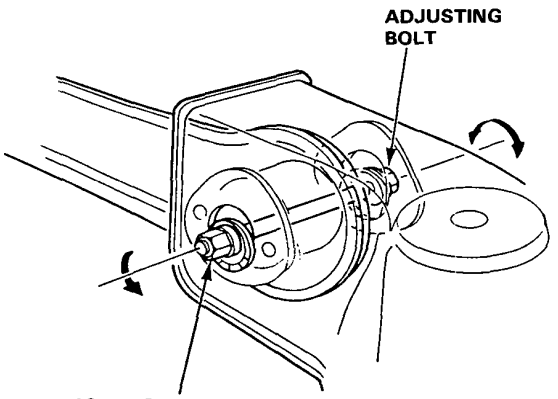

12 x 1.25 mm
75 N·m (7.5 kg-m, 54 lb-ft)
Replace.

Front Camber Inspection

NOTE: Check tires for proper inflation before inspection.

1. With the wheels in a straight ahead position, remove two lug nuts and install the Wheel Alignment Gauge Attachment on the wheel as shown.

   NOTE: Make sure that the special tool is installed parallel to the front hub by using a depth gauge through the three holes in the special tool.

2. Set up the camber/caster gauge.

3. Read the camber on the gauge with the bubble at the center of the gauge.

   Camber angle: 0°00′ ± 1°

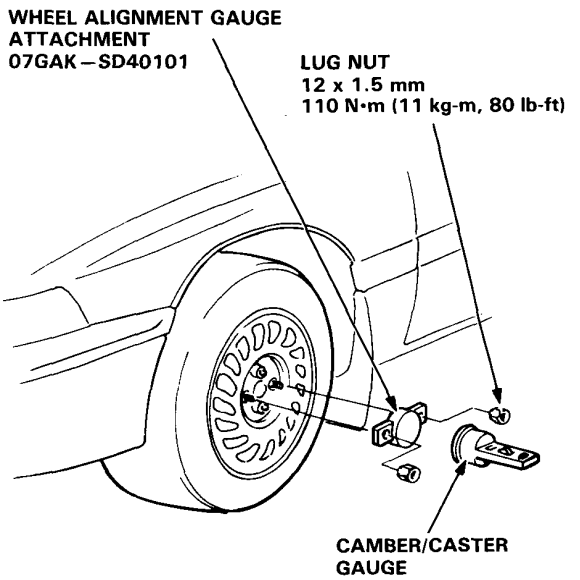

Rear Camber Inspection

NOTE: Check tires for proper inflation before inspection.

1. With the wheels in a straight ahead position, remove two lug nuts and install the Wheel Alignment Gauge Attachment on the wheel as shown.

   NOTE: Make sure that the special tool is installed parallel to the hub bearing unit by using a depth gauge through the three holes in the special tool.

2. Set up the camber/caster gauge.

3. Read the camber on the gauge with the bubble at the center of the gauge.

   Camber angle: 0°00′ ± 1°

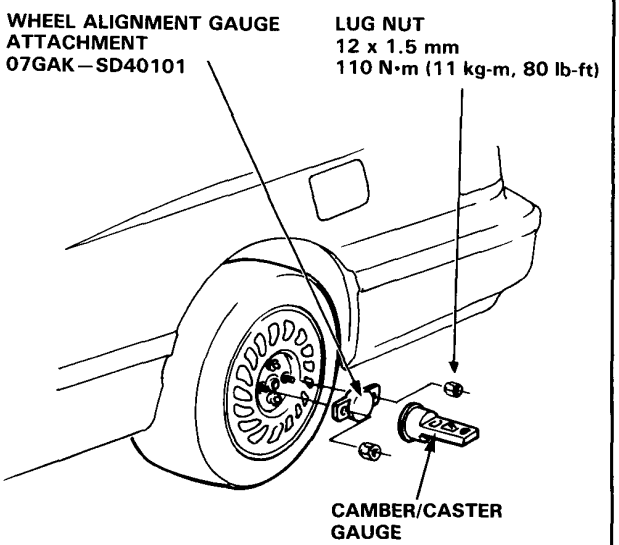

Caster Inspection/Adjustment

NOTE: Check tires for proper inflation before inspection/adjustment.

1. Jack up the front of the car and set the turning radius gauges beneath the front wheels, then lower the car.

2. Jack up the rear of the car, place boards under the rear wheels the same thickness as one of the turning radius guages, then lower the car.

3. Remove two lug nuts and install the Wheel Alignment Gauge Attachment.

   NOTE: Make sure that the special tool is installed parallel to the front hub by using a depth gauge through the three holes in the special tool.

4. Install a camber/caster gauge on the Wheel Alignment Gauge Attachment and apply the front brake. Turn the wheel 20° inward.

5. Turn the adjust screw so that the bubble in the caster gauge is at 0°.

6. Turn the wheel 20° outward and read the caster on the gauge with the bubble at the center of the gauge.

   Caster Angle: 1°40′ ± 1°

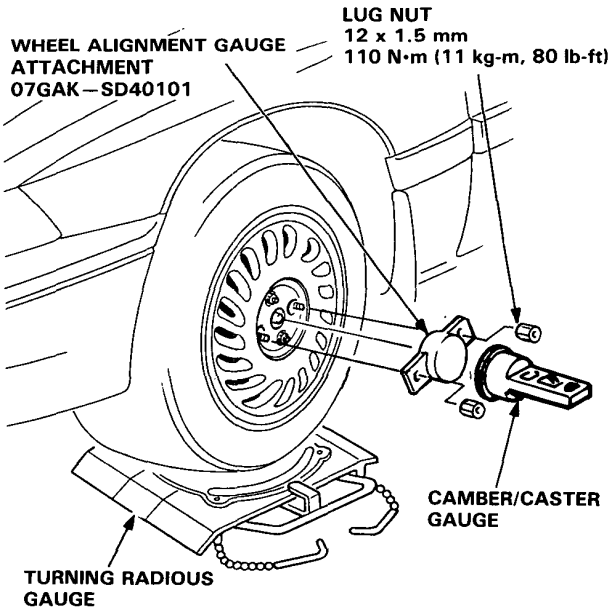

7. If adjustment is required, record the caster reading, then go to step 8. If adjustment is not required, remove alignment equipment.

8. Loosen the radius rod attaching bolts *at the lower* arm.

9. Loosen the radius rod adjuster locknut, and the self-locking nut on the end of the radius rod.

10. Adjust the caster by turning the radius rod adjuster as required.

    To increase : Turn the adjuster in.
    To decrease : Turn the adjuster out.

    NOTE: Turning the adjuster one full turn moves the radius rod 1.25 mm, and changes the caster 0°14′.

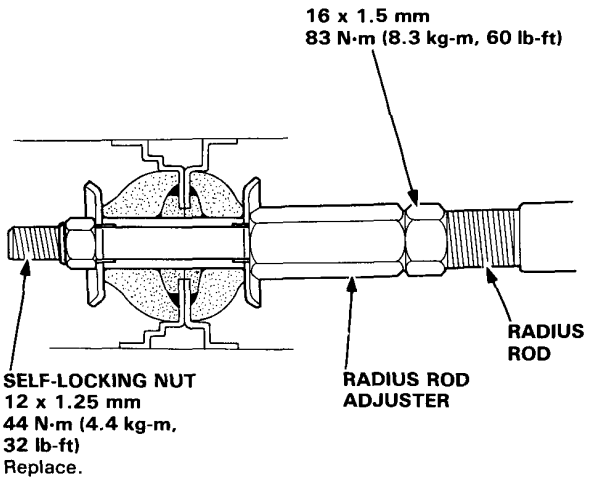

11. Tighten the radius rod attaching bolts and radius rod adjuster locknut, then tighten the self-locking nut.

12. Recheck the caster adjustment.

Wheel Measurement

Bearing End Play

Front Wheel End Play

Standard: 0–0.05 mm (0–0.002 in)

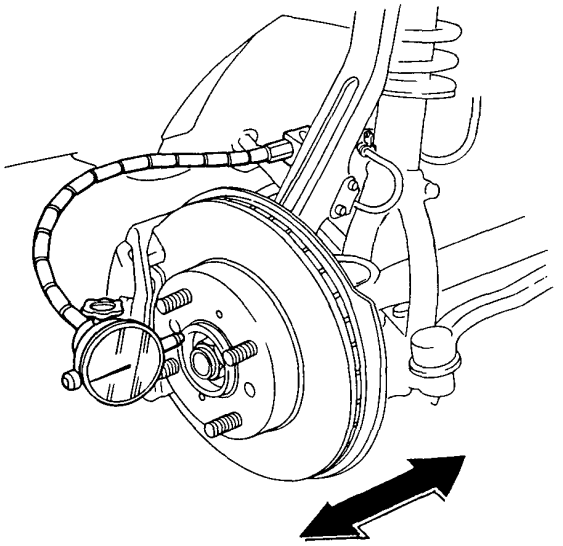

Rear Wheel End Play

Standard: 0–0.05 mm (0–0.002 in)

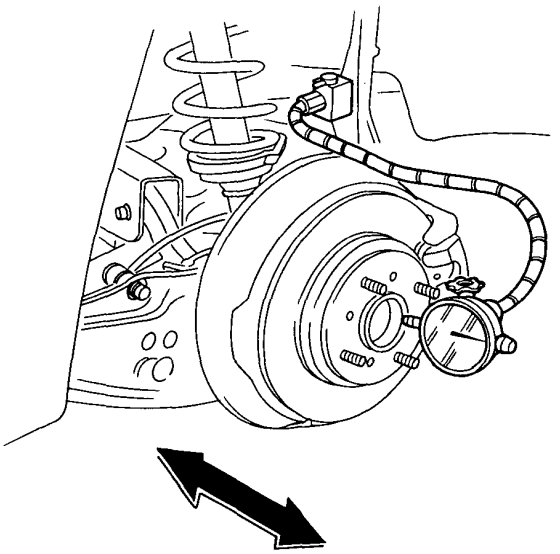

Runout

Front and Rear Wheel Axial Runout

Standard:
Aluminum Wheel: 0–0.7 mm (0–0.03 in)

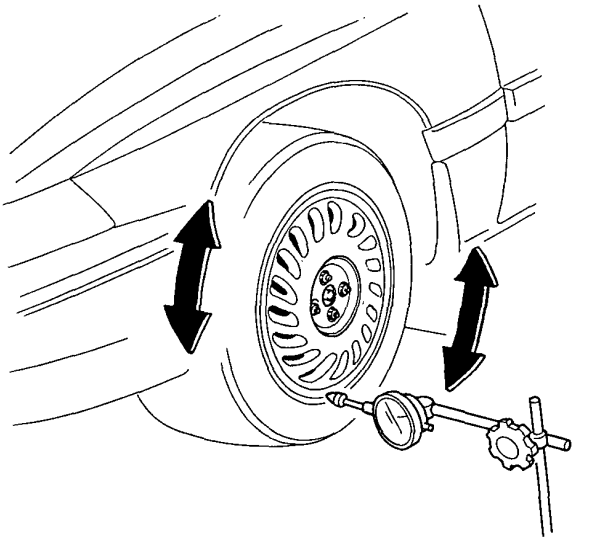

Front and Rear Wheel Radial Runout

Standard:
Aluminum Wheel: 0–0.7 mm (0–0.03 in)

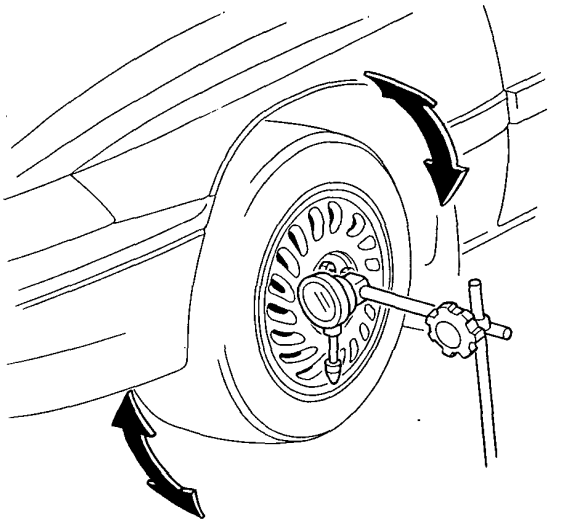

Torque Specification

CAUTION:
- Replace the self-locking nuts after removal.
- Replace the self-locking bolts if you can easily thread a nut past their nylon locking inserts.

NOTE: Wipe off the grease before tightening the nut at the ball joint.

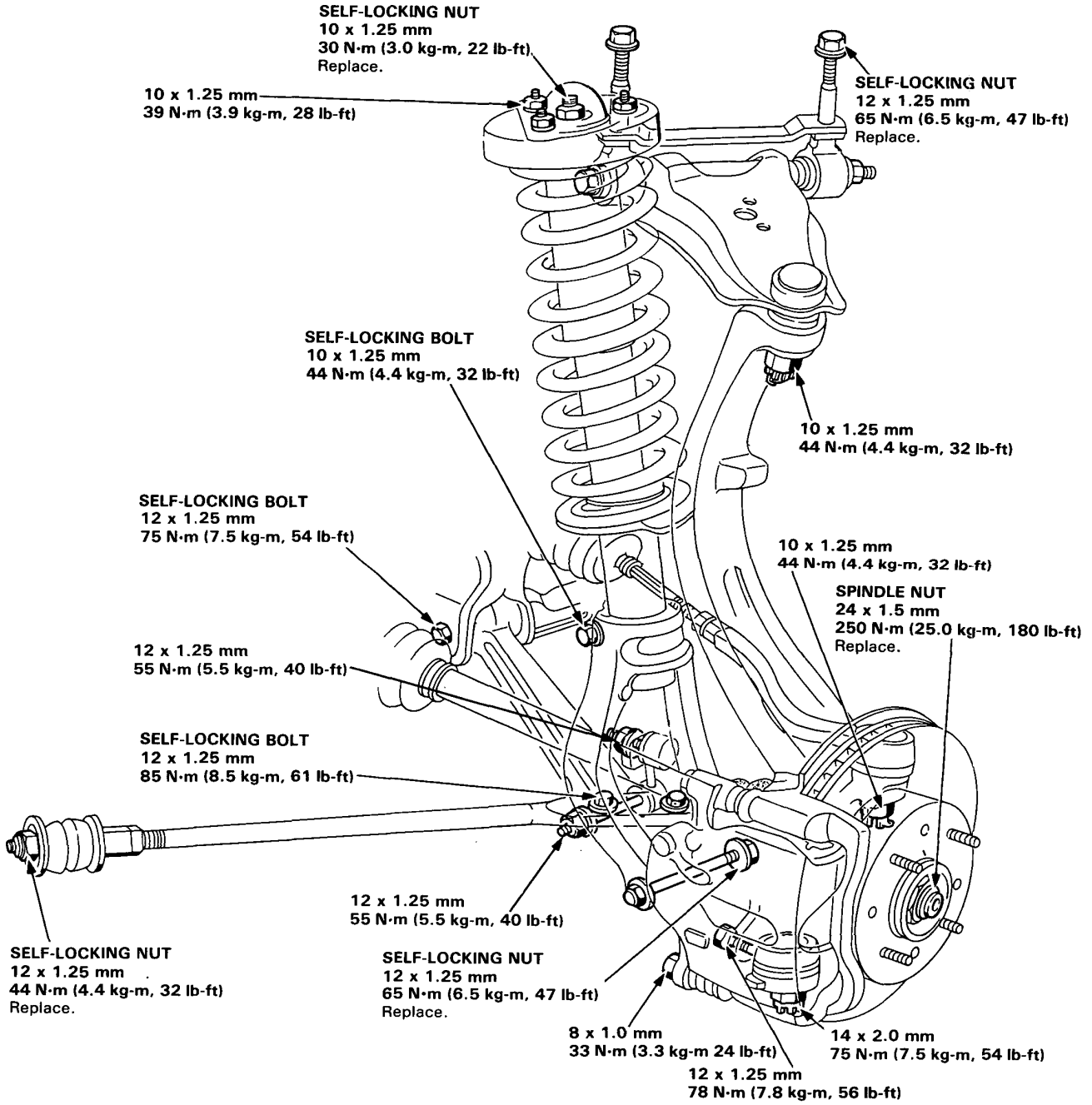

CAUTION: The vehicle should be on the ground before any bolts or nuts connected to rubber mounts or bushings are tightened.

Index/Inspection

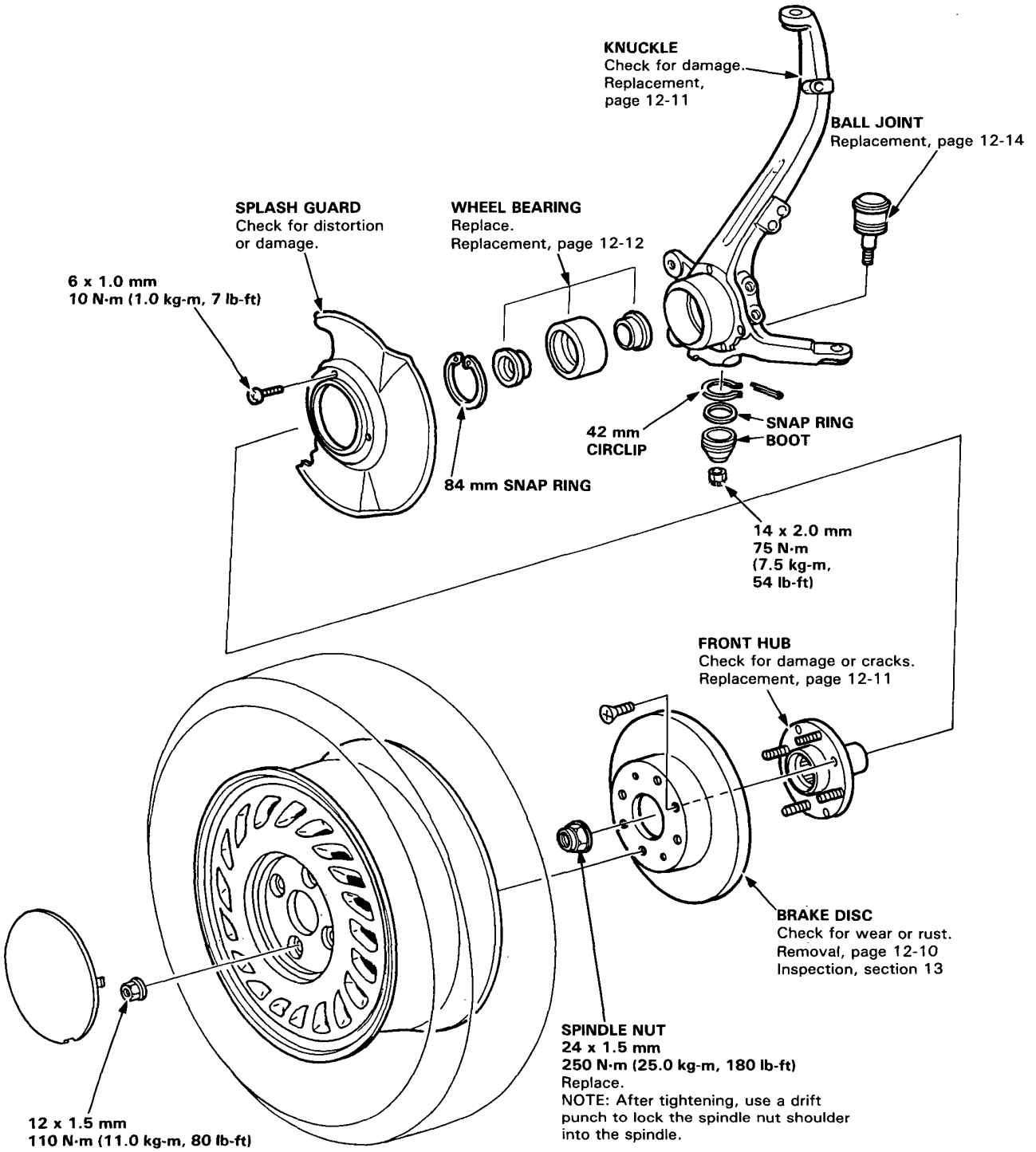

Knuckle/Hub

Removal

1. Pry the spindle nut lock tab away from the spindle, then loosen the nut using a 36 mm socket.

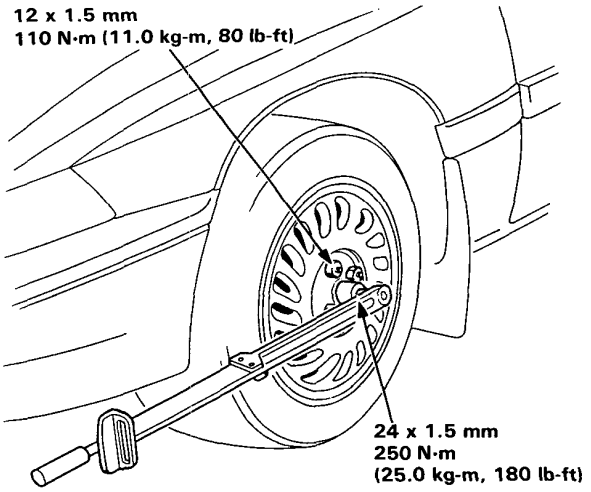

2. Loosen the lug nuts slightly.

3. Raise the front of car and support it with safety stands in proper locations.

4. Remove the lug nuts, wheel and spindle nut.

5. Remove the caliper mounting bolts and hang the caliper assembly to one side.

   CAUTION: To prevent accidental damage to the caliper assembly or brake hose, use a short piece of wire to hang the caliper assembly from the undercarriage.

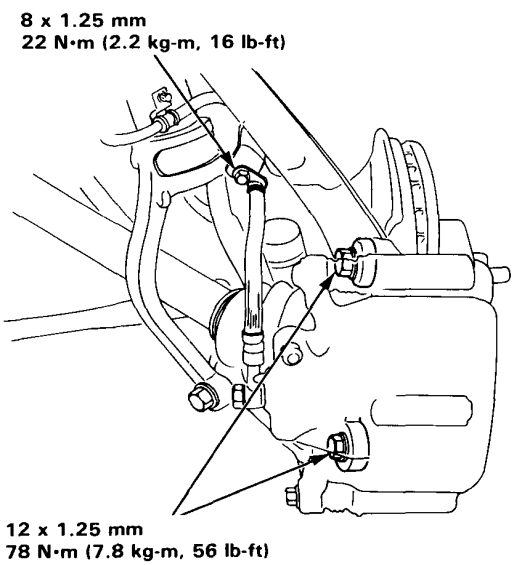

6. Remove the 6 mm brake disc retaining screws.

7. Screw two 8 x 12 mm bolts into the disc to push it away from the hub.

   NOTE: Turn each bolt two turns at a time to prevent cocking disc excessively.

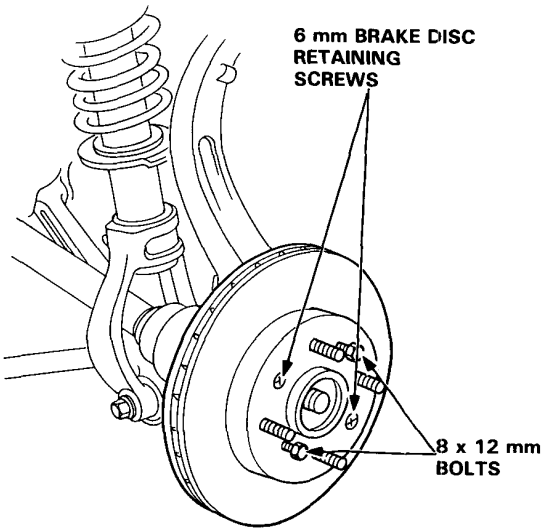

8. Remove the cotter pin from the tie-rod end and remove the castle nut.

9. Break loose the tie-rod ball joint using the Ball Joint Remover, then lift the tie-rod out of the knuckle.

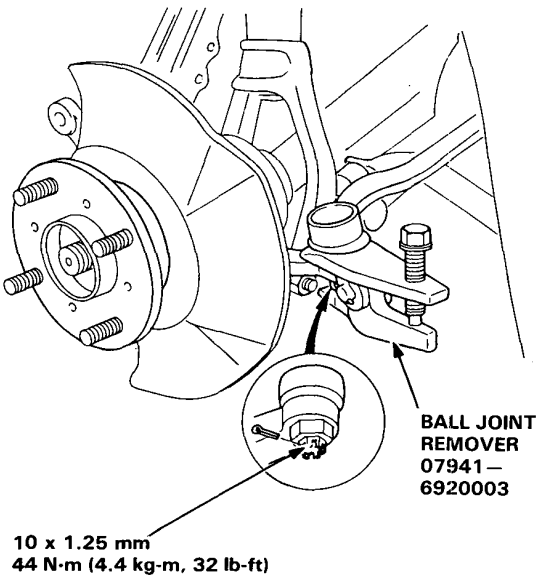

10. Pry the cotter pin off and loosen the lower arm ball joint nut half the length of the joint threads.

11. Separate the ball joint and lower arm using a puller with the pawls applied to the lower arm.

CAUTION: Avoid damaging the ball joint boot.

NOTE: If necessary, apply penetrating type lubricant to loosen the ball joint.

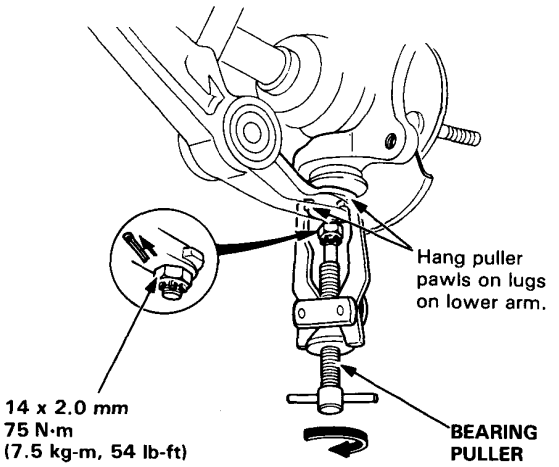

12. Pry off the cotter pin and remove the upper arm ball joint nut.

13. Separate the upper ball joint and knuckle using the Ball Joint Remover.

14. Remove the knuckle and hub by sliding them off the driveshaft.

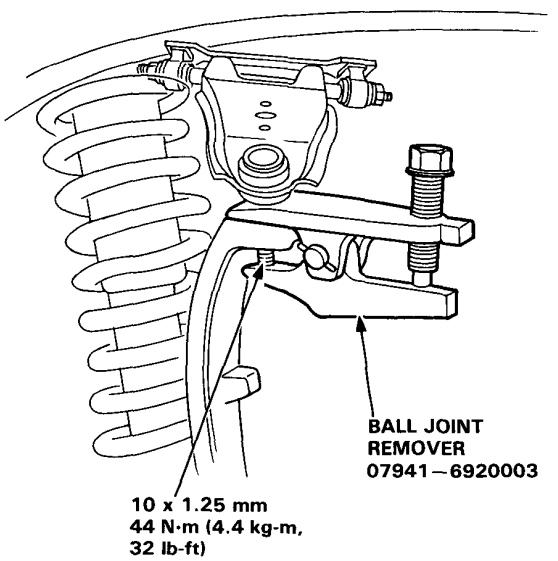

15. Remove the splash guard screws from the knuckle.

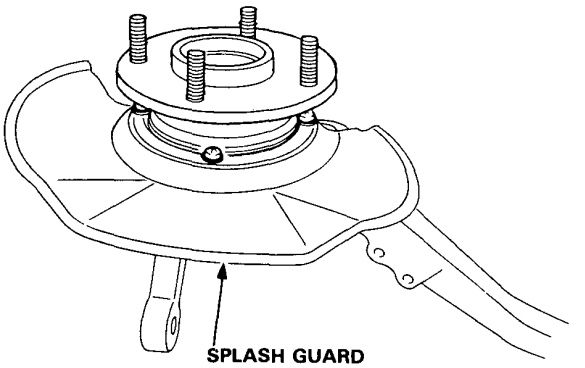

16. Separate the hub from the knuckle using a hydraulic press and the special tools shown below.

CAUTION:
- **Take care not to distort the splash guard.**
- **Hold onto the hub to keep it from falling when pressed clear.**

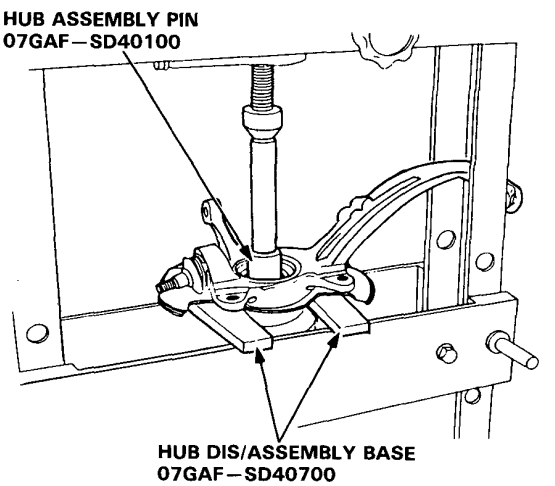

Bearing Removal

NOTE: Replace the bearing with a new one after removal.

1. Remove the 84 mm snap ring from the knuckle.
2. Press the wheel bearing out of the knuckle using a hydraulic press and the special tools shown below.

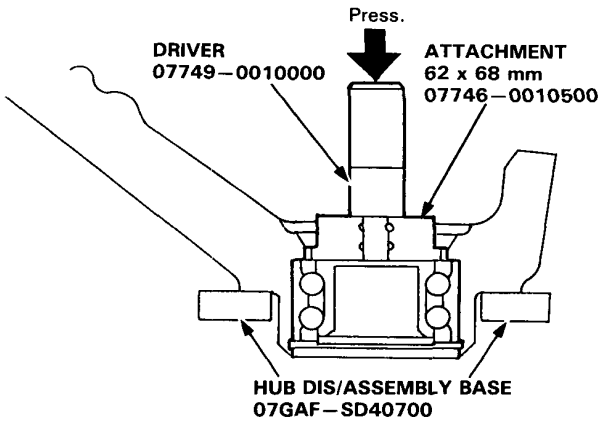

3. Remove the outboard bearing inner race from the hub using a bearing puller and the special tools shown below.

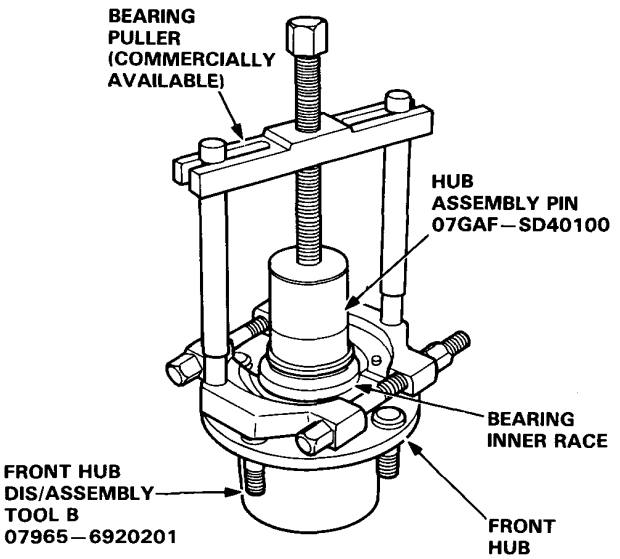

NOTE: Wash the knuckle and hub thoroughly before reassembly.

Reassembly

1. Press a new wheel bearing into the hub using a hydraulic press and the special tools shown below.

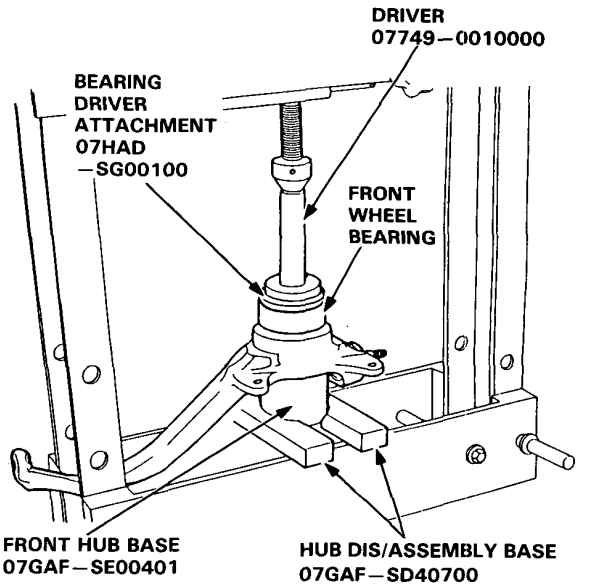

2. Install the 84 mm snap ring securely in the knuckle groove.

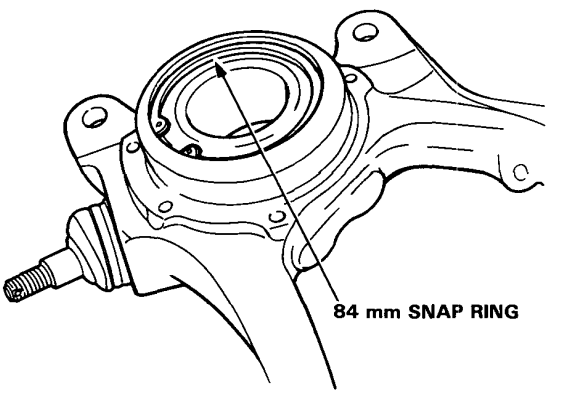

3. Install the splash guard and tighten the screws.

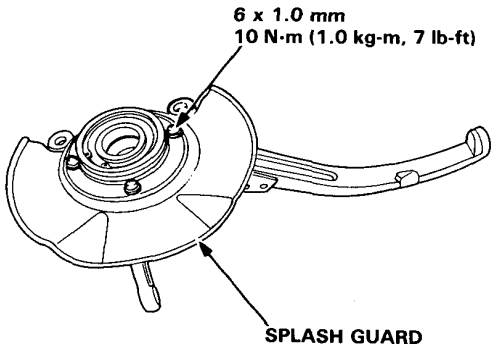

4. Place the front hub in special tool fixture, then set the knuckle in position and apply downward pressure with a hydraulic press.

CAUTION: Maximum press load: 4 tons

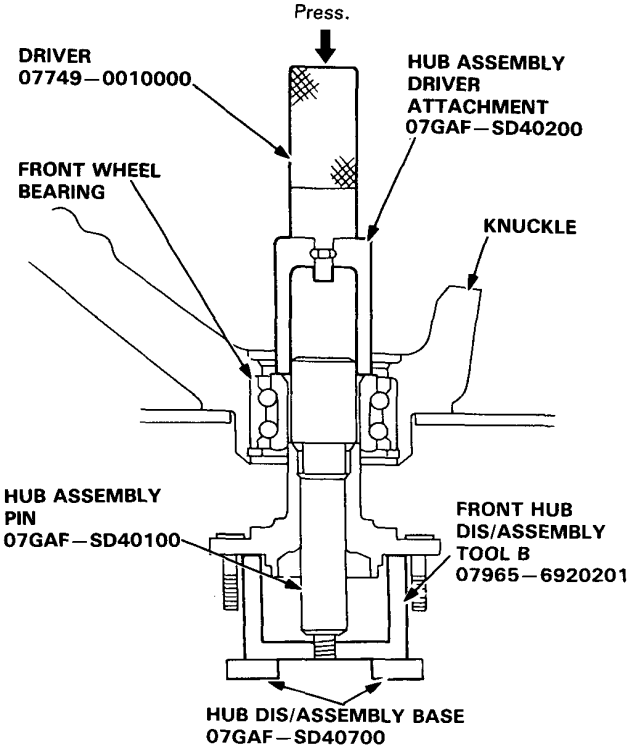

Upper Arm/Stabilizer/Radius Rod/Lower Arm

Index

CAUTION:

- **The radius rod bushings can easily be incorrectly installed; the thick radius rod bushing should be installed in the *front position*.**
- **R or L mark is stamped on the rear end of the radius arm to prevent incorrect installation.**

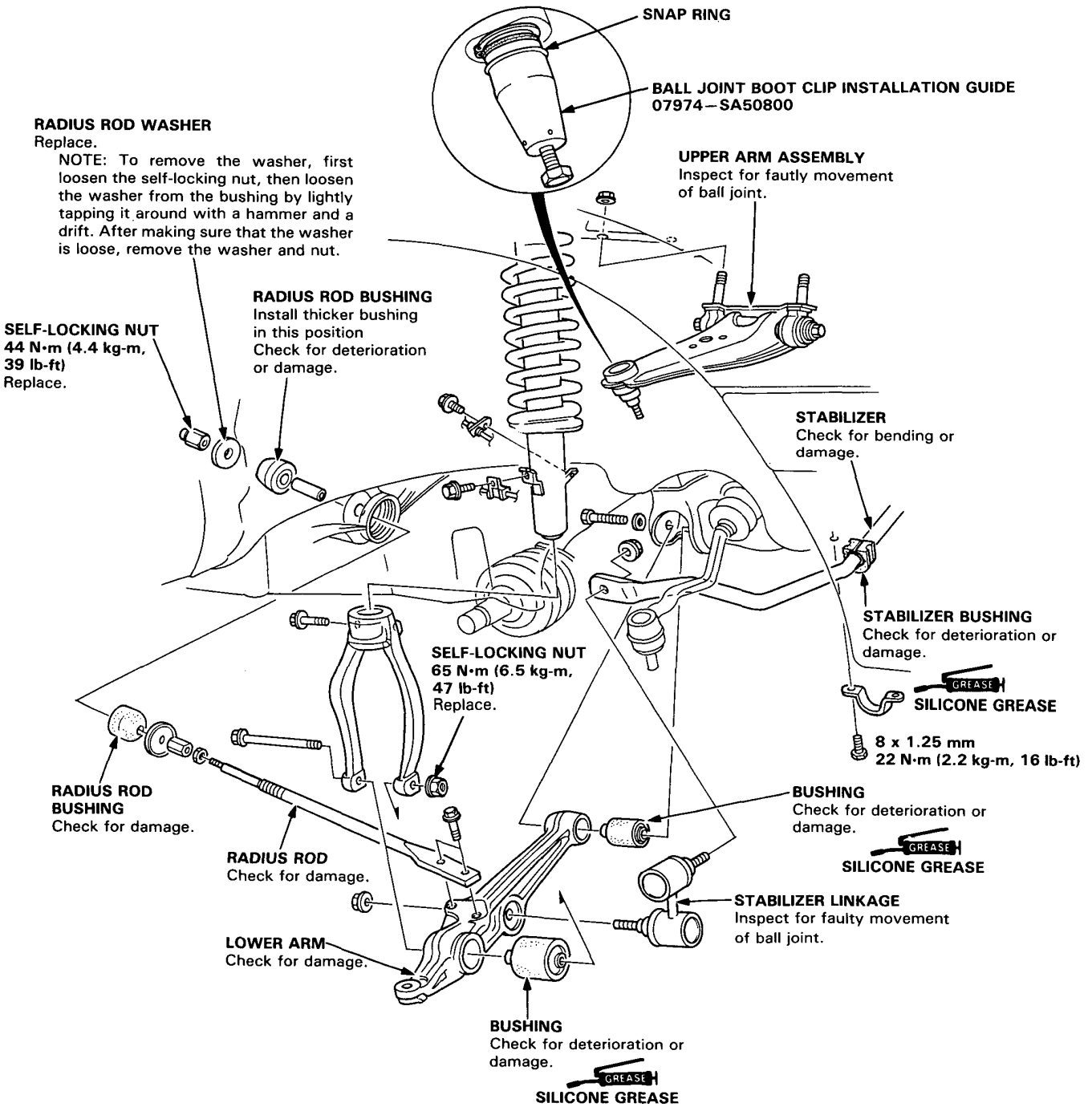

Front Damper

Removal

1. Remove the brake hose clamps from the damper.
2. Remove the damper pinch bolt.
3. Remove the damper fork bolt and remove the damper fork.
4. Remove the damper by removing the three 10 mm nuts.

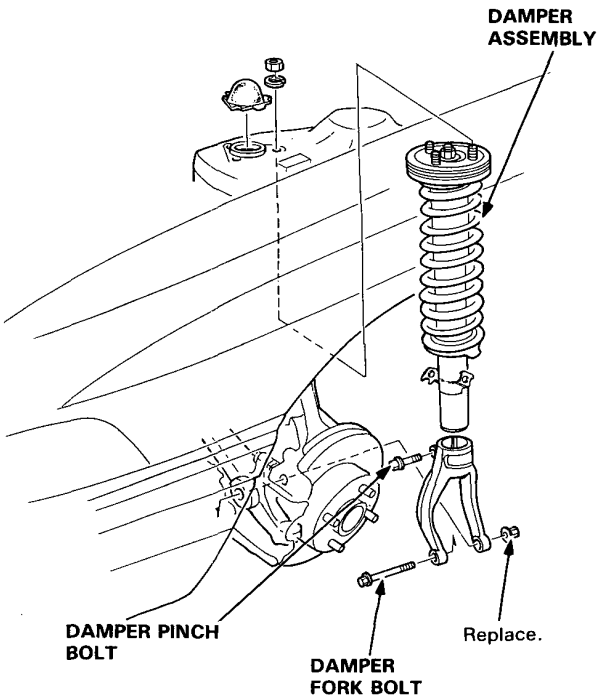

Disassembly/Inspection

1. Compress the damper spring using spring compressor, then remove the self-locking nut.

   CAUTION: Do not compress the spring more than necessary to remove the nut.

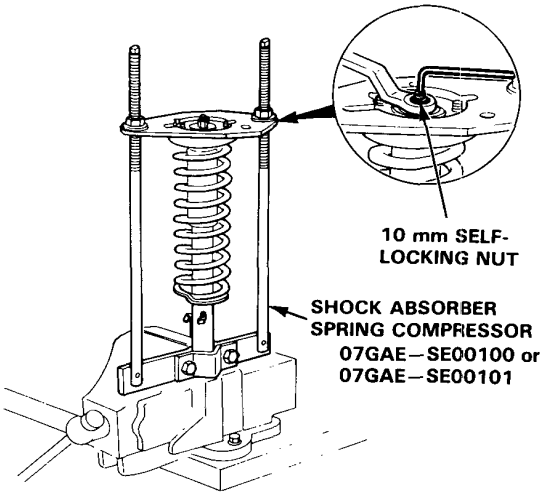

2. Remove the spring compressor, then disassemble the damper as shown on the next page.
3. Check for smooth operation through a full stroke, both compression and extension.

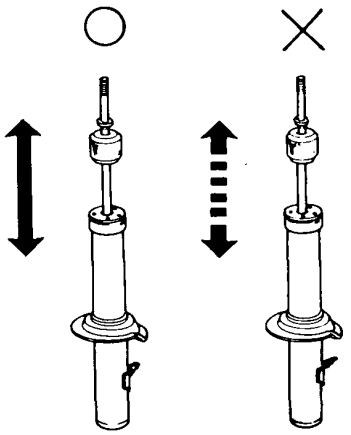

4. Also check for smooth operation in short strokes of 5—10 cm (2—4 in). Replace the damper if resistance is uneven or jerky.
5. Check for oil leaks, abnormal noises or binding during these tests.

Front Damper

Removal

1. Remove the brake hose clamps from the damper.
2. Remove the damper pinch bolt.
3. Remove the damper fork bolt and remove the damper fork.
4. Remove the damper by removing the three 10 mm nuts.

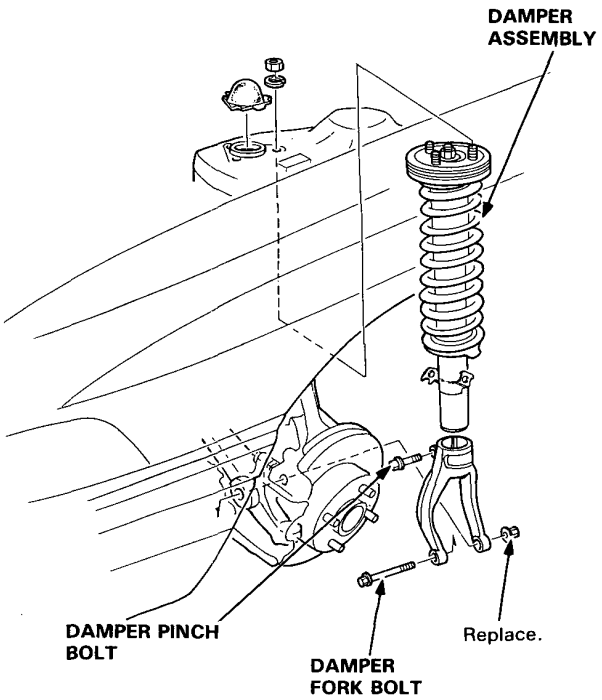

Disassembly/Inspection

1. Compress the damper spring using spring compressor, then remove the self-locking nut.

   CAUTION: Do not compress the spring more than necessary to remove the nut.

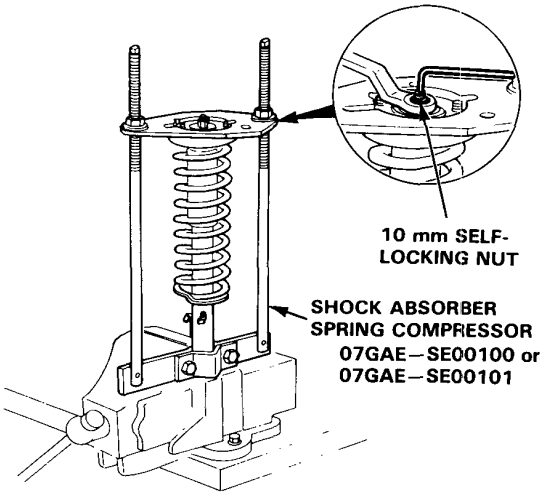

2. Remove the spring compressor, then disassemble the damper as shown on the next page.
3. Check for smooth operation through a full stroke, both compression and extension.

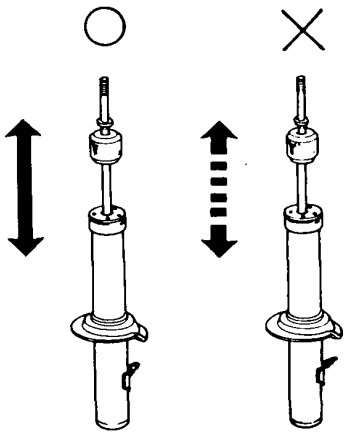

4. Also check for smooth operation in short strokes of 5—10 cm (2—4 in). Replace the damper if resistance is uneven or jerky.
5. Check for oil leaks, abnormal noises or binding during these tests.

Inspection

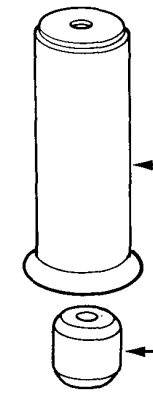

DUST COVER
Check for bending or damage.

BUMP STOP
Check for weakness or damage.

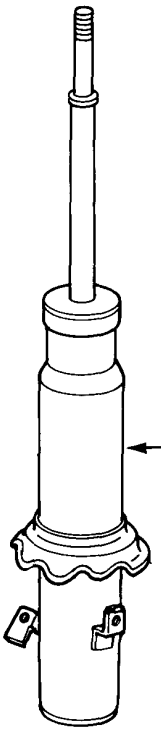

DAMPER UNIT
- Check for leaks and faulty operation.
- Check for rust.

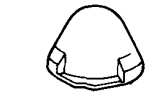

10 mm SELF-LOCKING NUT
30 N•m (3.0 kg-m, 22 lb-ft)
Replace.

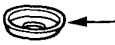

DAMPER MOUNTING WASHER
Check for weakness.

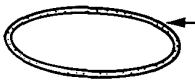

SEAL
Check for damage.

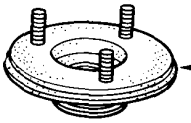

DAMPER MOUNTING BASE

DAMPER MOUNTING COLLAR

DAMPER MOUNTING RUBBER

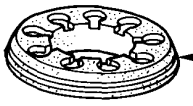

SPRING MOUNTING RUBBER
Check for damage.

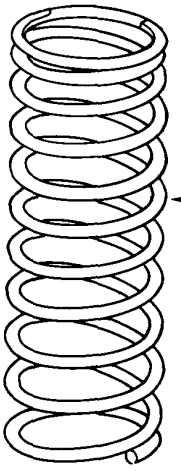

DAMPER SPRING
Check for weakness, compression or damage.

Front Damper

Reassembly

1. Install the damper unit, bump stop, dust cover, damper spring, mounting collar, mounting rubber and spring mounting rubber on the spring compressor.

2. Install the damper mounting base on the damper unit as shown.

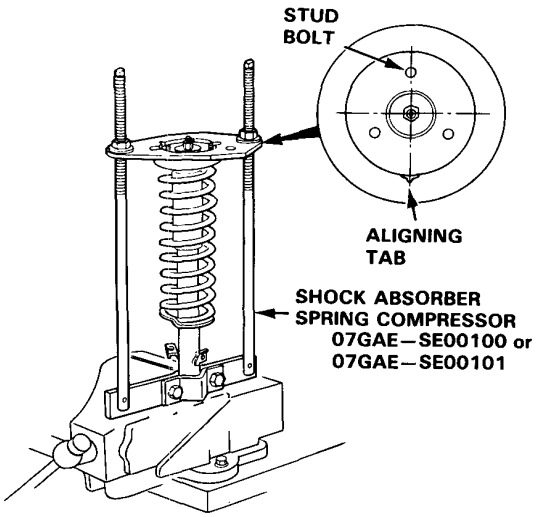

3. Compress the damper spring.

4. Install the mounting rubber, mounting washer and 10 mm self-locking nut.

5. Hold the damper shaft and tighten the 10 mm self-locking nut.

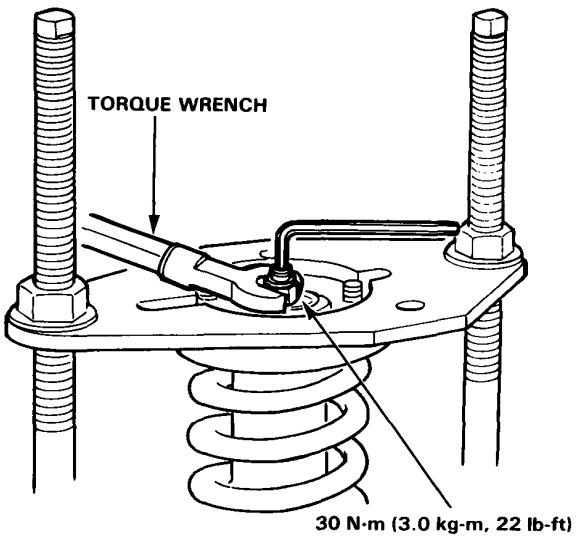

Installation

1. Loosely install the damper on the frame with the aligning tab facing inside.

2. Install the damper fork on the driveshaft and lower arm. Install the damper in the damper fork so the aligning tab is aligned with the slot in the damper fork.

3. Raise the knuckle with a floor jack until the car just lifts off the safety stands.

   NOTE: The damper fork bolt should be tightened with the vehicle on the ground.

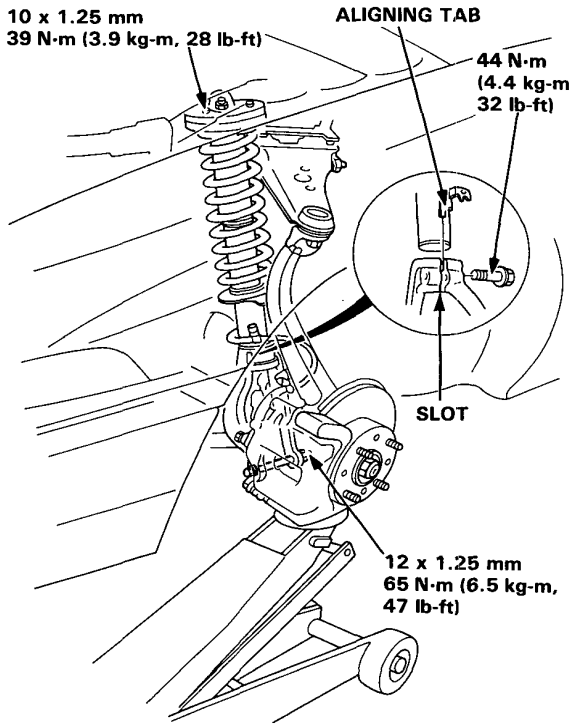

4. Tighten the damper pinch bolt.

5. Secure the damper fork bolt with a new 12 mm self-locking nut.

6. Secure the damper assembly to the frame with the 10 mm mount nuts.

7. Install the brake hose clamps with the two bolts.

Torque Specification

CAUTION:
- **Replace self-locking nuts after disassembly.**
- **Replace self-locking bolts if you can easily thread a nut past their nylon locking inserts.**

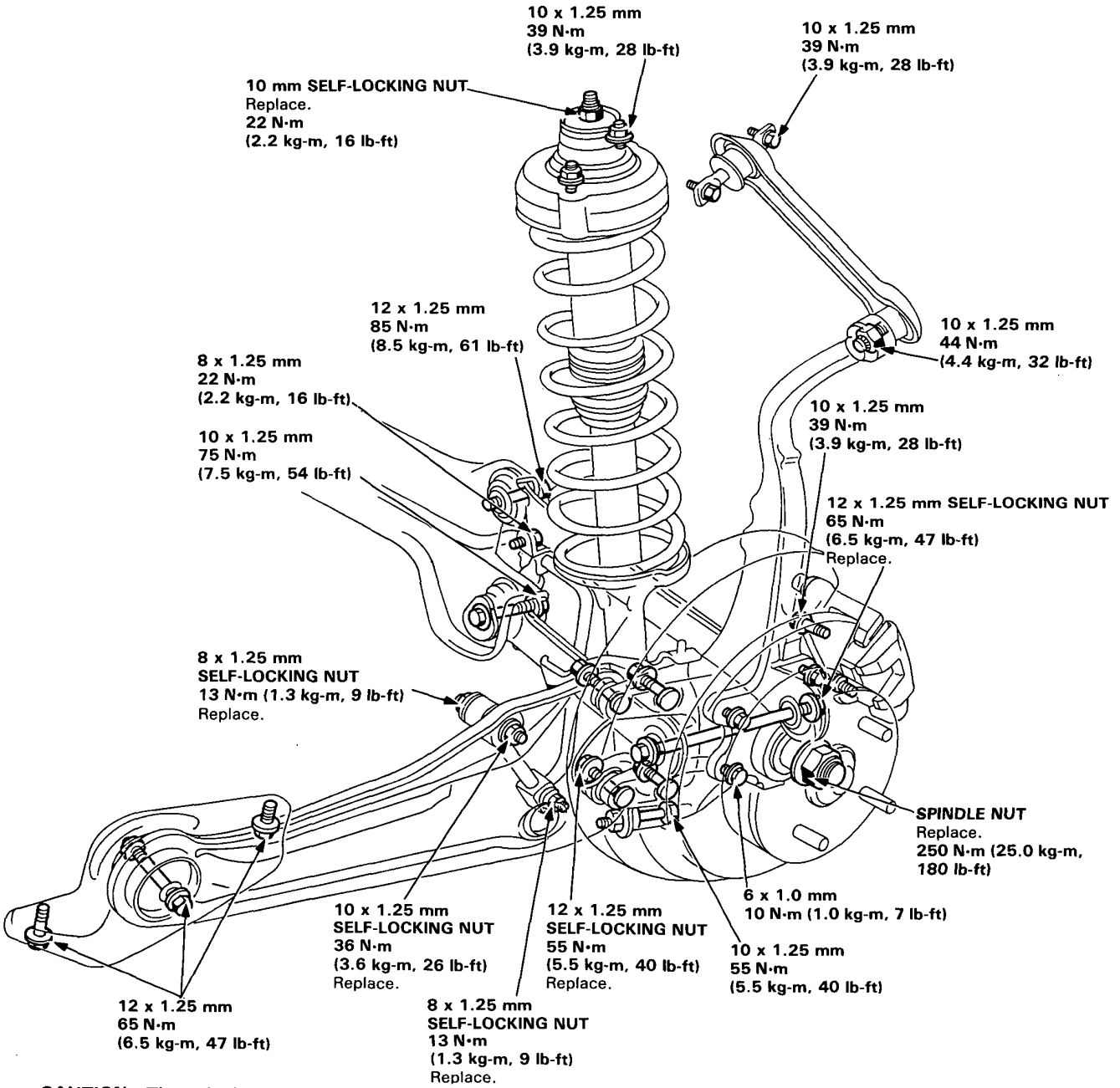

CAUTION: The vehicle should be on the ground before any bolts or nuts connected to rubber mounts or bushings are tightened.

Index/Inspection

CAUTION:

- **Lower arms A and B are interchangeable from side to side. Make sure their left and right side marks (⇧L. UP, ⇧R. UP) are facing up for assembly.**
- **If the trailing arm bracket bolt is tightened before installation on the frame, tighten the bracket bolt with a trailing arm-to-bracket end clearance of 32.3 mm (1.27 in).**

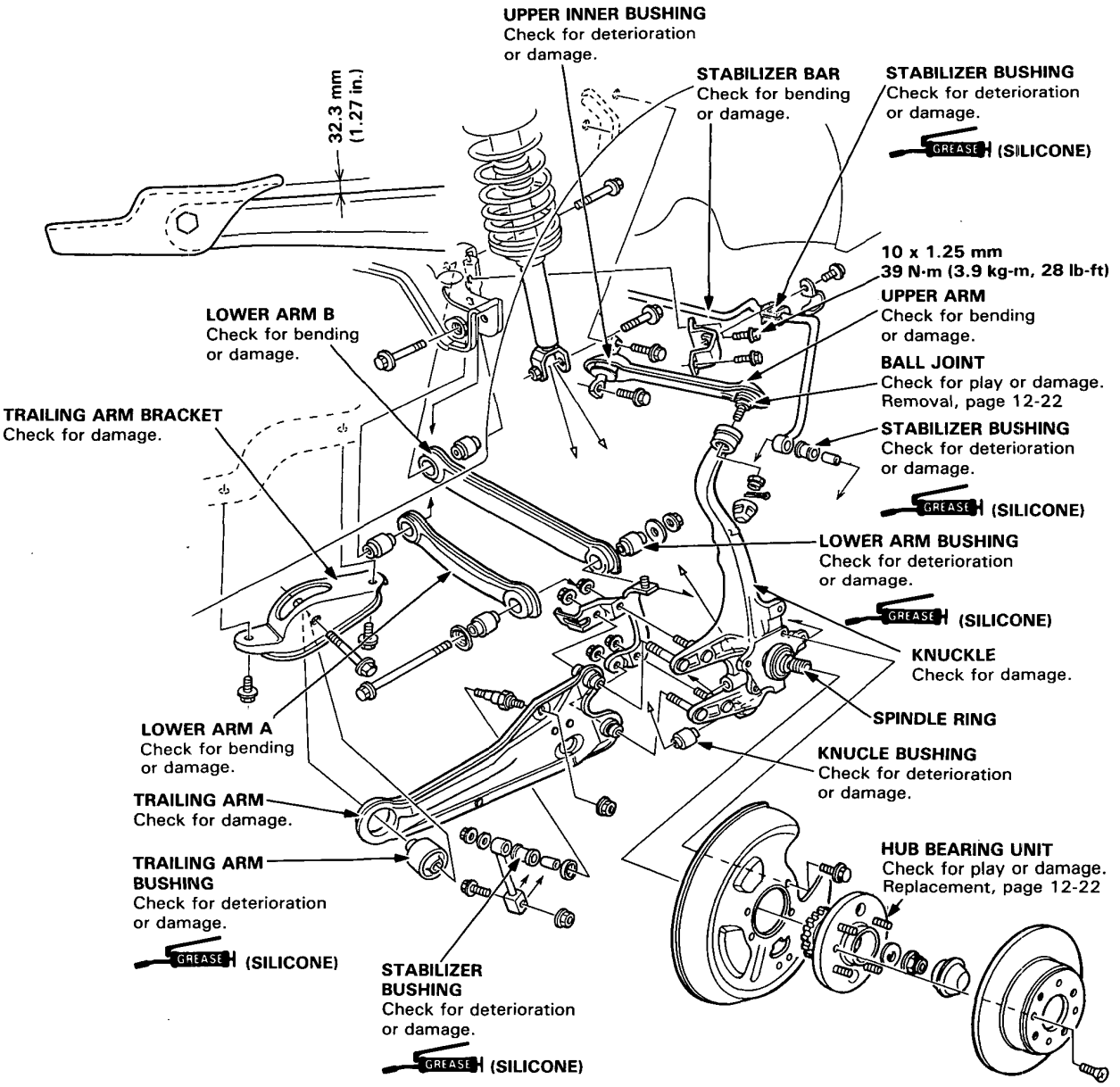

Bushing Installation

Trailing Arm Bushing

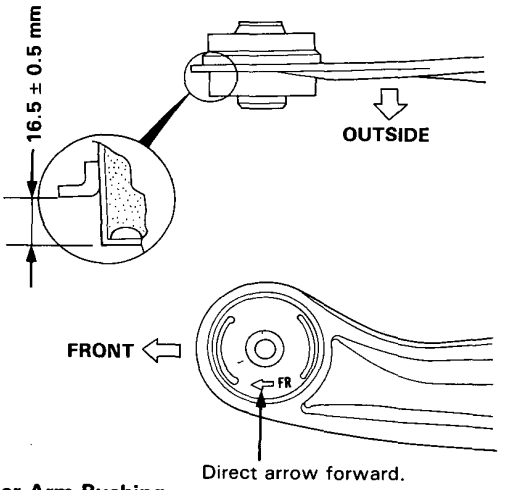

Lower Arm Bushing

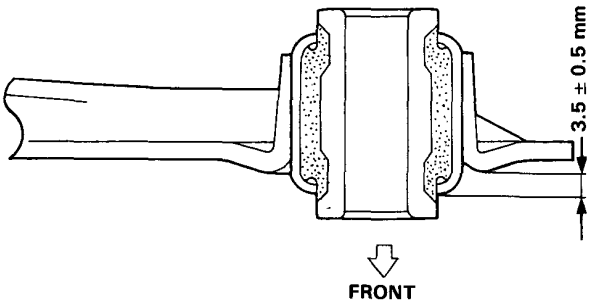

Knuckle Bushing

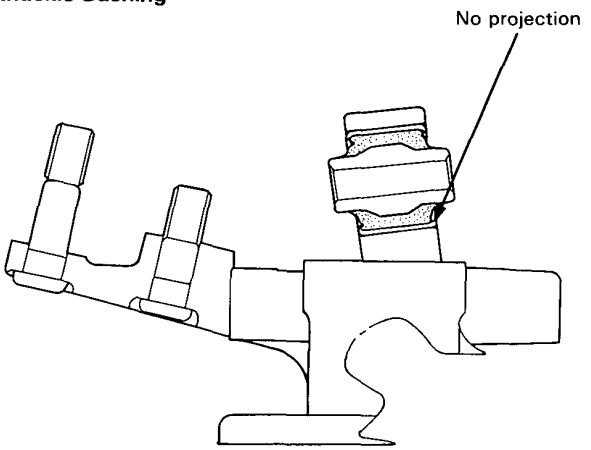

Stabilizer Bushing

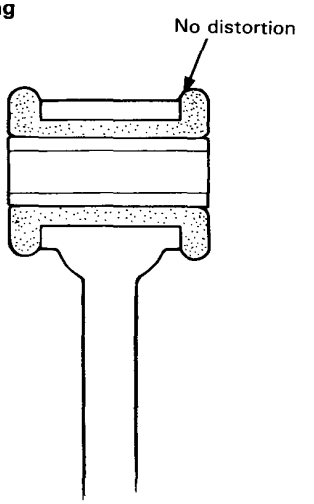

Hub Bearing Unit

Replacement

1. Raise the rear of car and support it with safety stands in proper locations.
2. Remove the rear wheel.
3. Remove the rear caliper and brake disc.
4. Remove the hub unit cap, then pry the spindle nut lock tab away from the spindle and loosen the nut.
5. Remove the hub bearing unit.

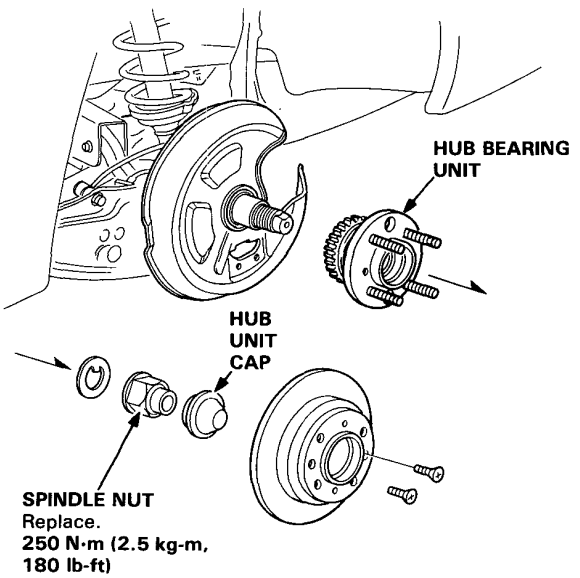

6. Install in reverse order of removal.
   Also, tighten the new spindle nut to specified torque before staking the nut.

Upper Arm

Ball Joint Removal

1. Remove the upper arm ball joint cap.
2. Remove the cotter pin and ball joint nut.
3. Position the bearing puller between the knuckle and upper arm as shown below, and remove the knuckle from the upper arm.

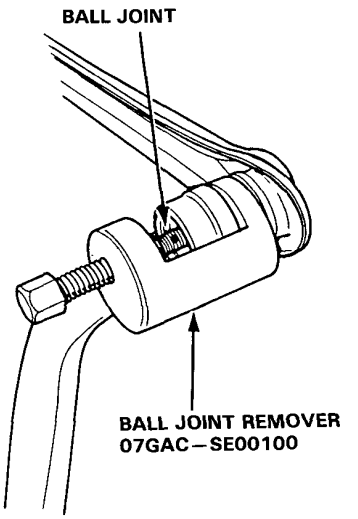

Rear Damper

Removal

1. Remove the trunk side carpet.
2. Remove the damper mounting nuts.

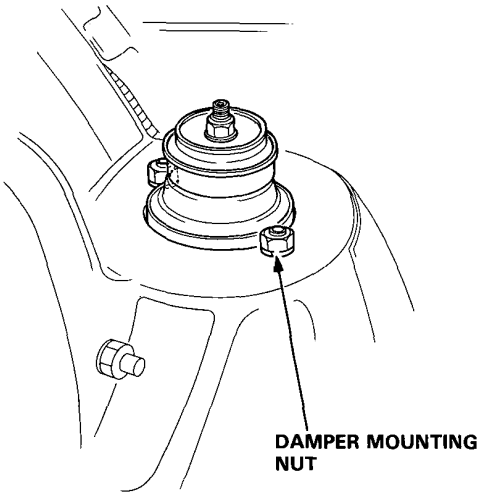

3. Remove the clamp of the parking brake cable from the trailing arm.
4. Remove the stabilizer linkage from the trailing arm.
5. Remove the upper arm mounting bolts.
6. Remove the damper mounting bolts.
7. Lower the rear suspension and remove the damper assembly.

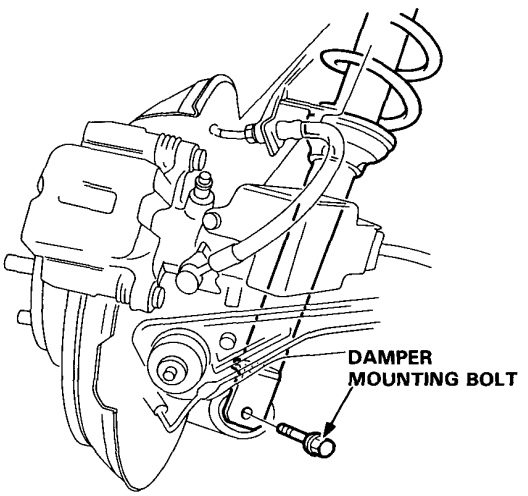

Disassembly/Inspection

1. Compress the damper spring using a spring compressor.

   CAUTION: Do not compress the spring more than necessary to remove the 10 mm self-locking nut.

2. Remove the 10 mm self-locking nut from the damper assembly.

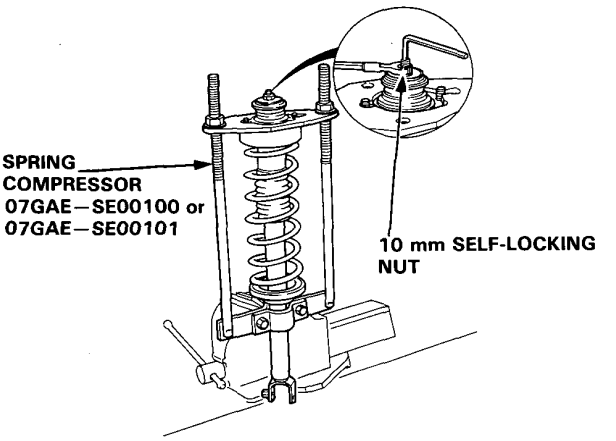

3. Remove the spring compressor and disassemble the damper as shown on next page.
4. Check for smooth operation through a full stroke, both compression and extension.

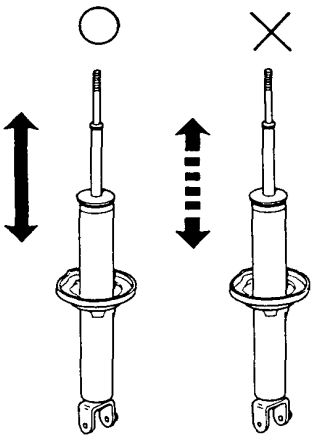

5. Also check for smooth operation in soft strokes of 5–10 cm (2–4 in). Replace the damper if risistance is uneven or jerky.
6. Check for oil leaks, abnormal noises or binding during these tests.

(cont'd)

Rear Damper

Removal

1. Remove the trunk side carpet.
2. Remove the damper mounting nuts.

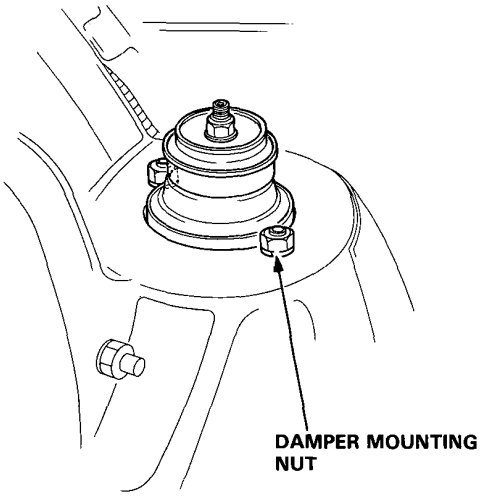

3. Remove the clamp of the parking brake cable from the trailing arm.
4. Remove the stabilizer linkage from the trailing arm.
5. Remove the upper arm mounting bolts.
6. Remove the damper mounting bolts.
7. Lower the rear suspension and remove the damper assembly.

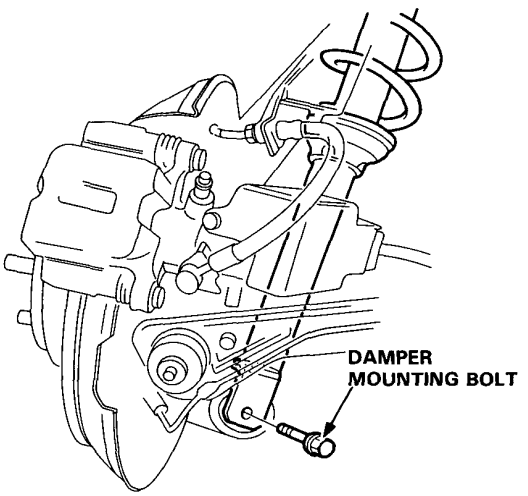

Disassembly/Inspection

1. Compress the damper spring using a spring compressor.

   CAUTION: Do not compress the spring more than necessary to remove the 10 mm self-locking nut.

2. Remove the 10 mm self-locking nut from the damper assembly.

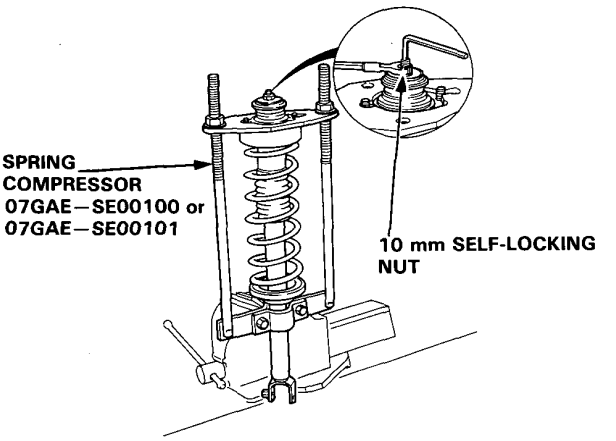

3. Remove the spring compressor and disassemble the damper as shown on next page.
4. Check for smooth operation through a full stroke, both compression and extension.

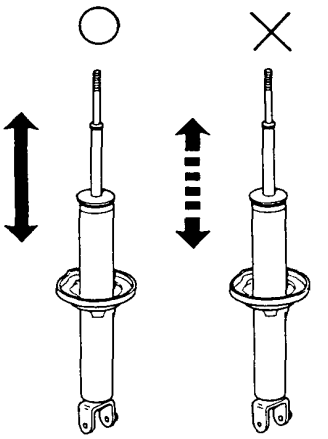

5. Also check for smooth operation in soft strokes of 5–10 cm (2–4 in). Replace the damper if risistance is uneven or jerky.
6. Check for oil leaks, abnormal noises or binding during these tests.

(cont'd)

Disassembly/Inspection (cont'd)

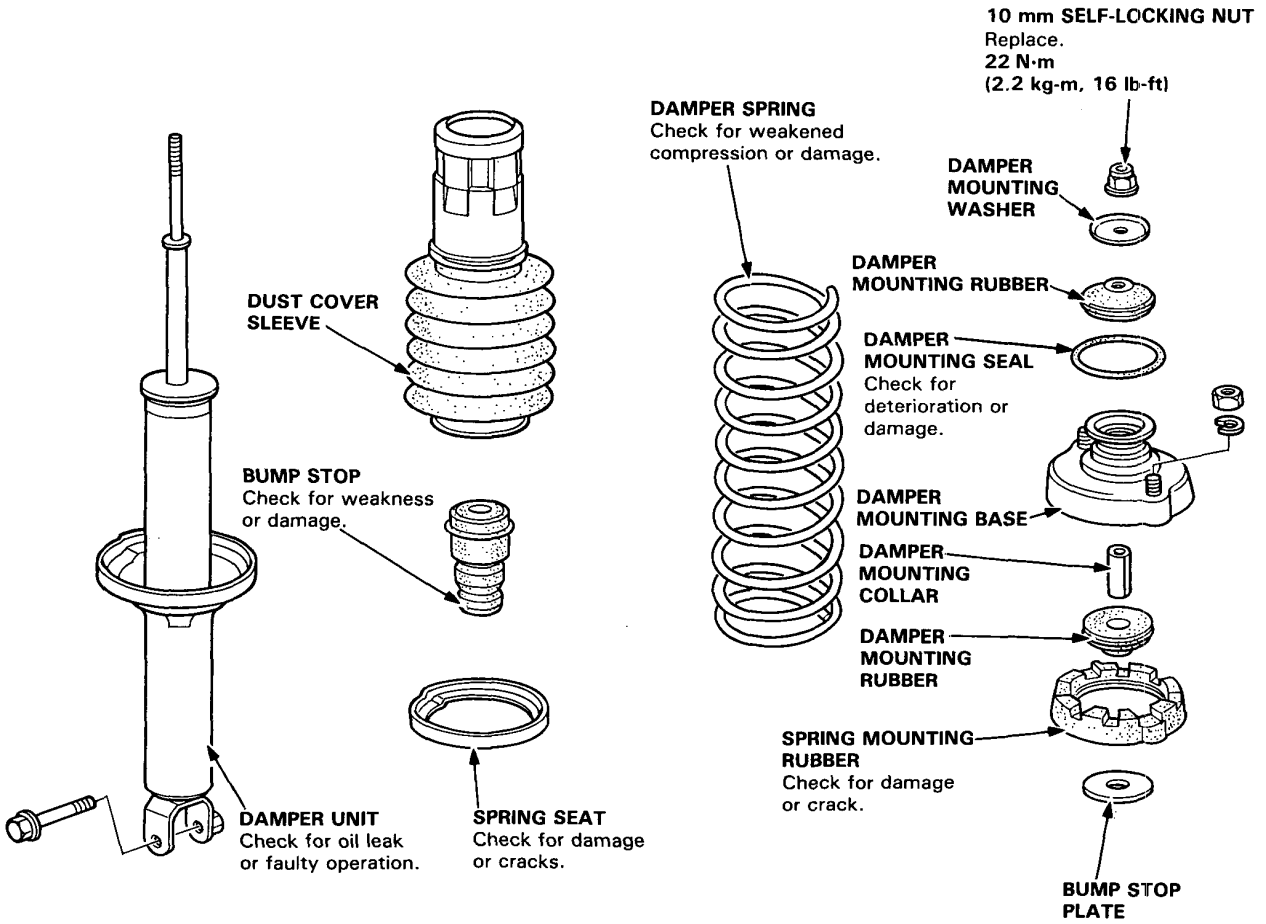

Reassembly

1. Install the damper unit on a spring compressor.
2. Install the spring seat, bump stop, dust cover sleeve, damper spring, bump stop plate, damper mounting collar, damper mounting rubber, spring mounting rubber and damper mounting base on the damper unit.
3. Compress the damper spring.

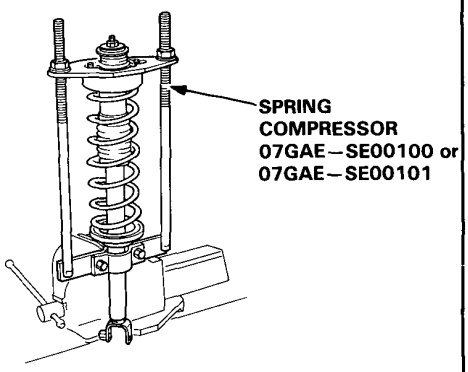

CAUTION: Install the damper mounting base so that the angle of the stud bolts is as shown.

NOTE: Left side, right side

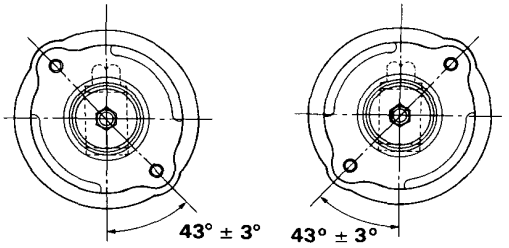

4. Install the damper mounting rubber and damper mounting washer, and loosely install a new 10 mm self-locking nut.
5. Hold the damper shaft and tighten the 10 mm self-locking nut.

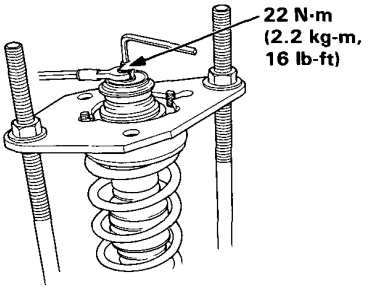

Installation

1. Lower the rear suspension and set the damper assembly in its original position.
2. Loosely install the damper mounting bolts.
3. Install and tighten the damper mounting nuts.

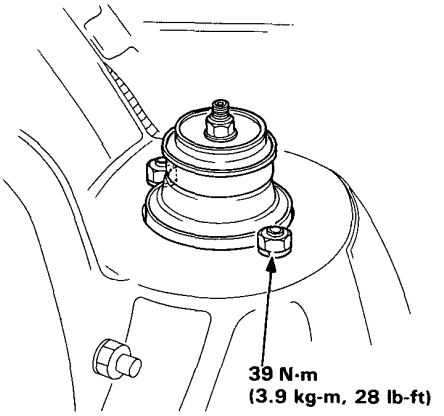

4. Install and tighten the upper arm mounting bolts.
5. Raise the rear suspension with a floor jack until the weight of the car is on the damper.
   NOTE: The damper mounting bolts should be tightened with the damper under vehicle load.
6. Tighten the damper mounting bolts.
7. Install the parking brake cable clamp and stabilizer linkage on the trailing arm.

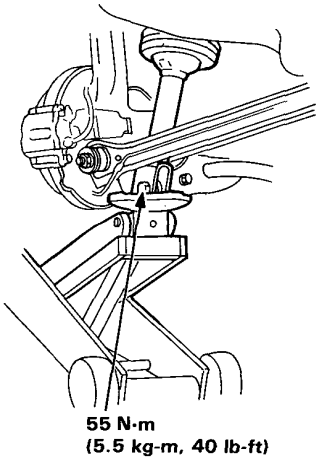

Special Tools

Special Tools

Ref. No.	Tool Number	Description	Q'ty	Remarks
①	07921–0010001	Flare Nut Wrench	1	
②	07510–6340300	Vacuum Joint Tube A	1	
③	07404–5790300	Vacuum Gauge	1	
④	07410–5790500	Tube Joint Adaptor	1	
⑤	07406–5790200	Pressure Gauges	2	
⑥	07410–5790100	Pressure Gauge Attachment	2	
⑦	07510–6340100	Pressure Gauge Joint Pipe	1	ϕ10 mm
⑧	07HAK–SG00110	Pressure Gauge Joint Pipe	1	ϕ12 mm
⑨	07JAG–SD40100	Brake Booster Rod Adjustment Gauge	1	
⑩	07HAE–SG00100	Brake Spring Compressor	1	
⑪	07914–SA50000	Snap Ring Pliers	1	
⑫	07508–SB00000	ALB Checker	1	
⑬	07HAJ–SG00300	ALB Checker Adaptor	1	
⑭	07907–SB00000	ALB-T Wrench	1	

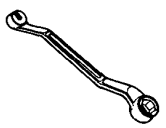
①

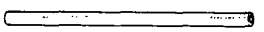
②

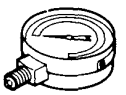
③

④

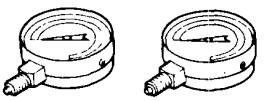
⑤

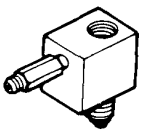
⑥

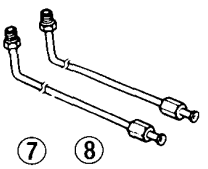
⑦ ⑧

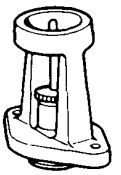
⑨

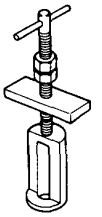
⑩

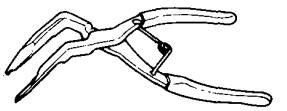
⑪

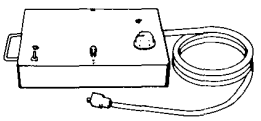
⑫

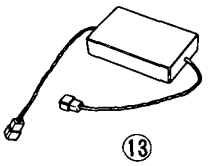
⑬

⑭

BRAKE LIGHT SWITCH
Pedal Height Adjustment, page 13-4

PARKING BRAKE
Adjustment, page 13-4
Disassembly and Reassembly, page 13-28

BRAKE HOSES/PIPES
Inspection, page 13-5
Connections, pages 13-7 and 13-6

BRAKE BOOSTER
Test, page 13-9
Pushrod Clearance Adjustment, page 13-10

REAR BRAKE
Index/Inspection, page 13-18
Brake Pad Disc Inspection Replacement, page 13-19
Brake Caliper Disassembly, page 13-21
Brake Caliper Reassembly, page 13-24

MASTER CYLINDER
Overhoul/Inspection, page 13-9
Disassembly, page 13-10
Reassembly, page 13-11

CONTROL UNIT
Replacement, page 13-67

MODULATOR
Index/Inspection, page 13-55
Brake Fluid Praining, page 13-56
Solenoids
Leak Test, page 13-56
Removal, page 13-57
Inspection, page 13-58
Reassembly, page 13-58
Piston
Removal, page 13-59
Installation, page 13-60

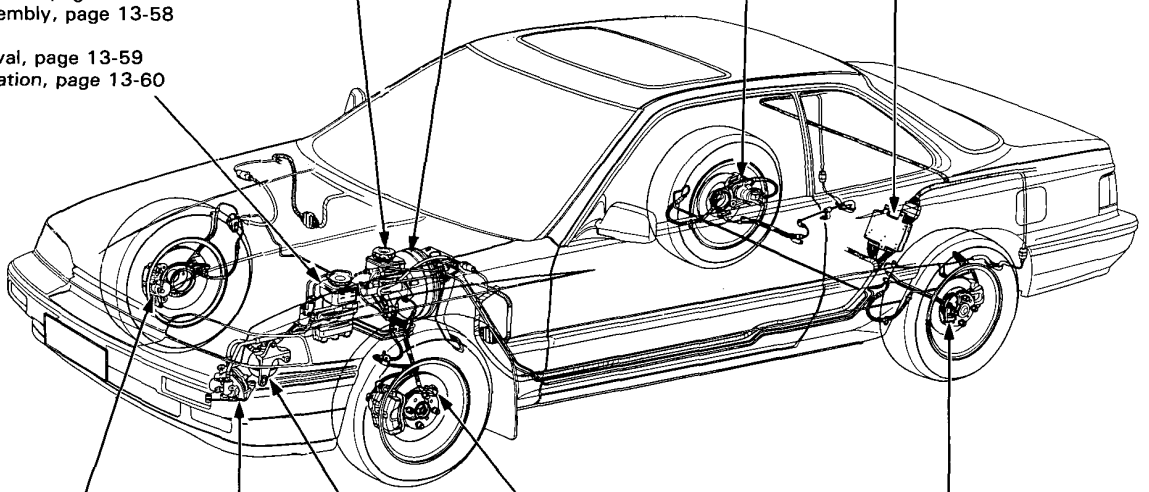

POWER UNIT
Index/Inspection, page 13-61
Disassembly, page 13-62
Reassembly, page 13-63

FRONT SPEED SENSOR
Inspection, page 13-68
Replacement, page 13-69

REAR SPEED SENSOR
Inspection, page 13-68
Replacement, page 13-69

FRONT BRAKE
Index/Inspection, page 13-13
Brake Pad Inspection/Replacement, page 13-14
Brake Caliper Disassembly, page 13-15
Brake Caliper Reassembly, page 13-16
Brake Disc Inspection, page 13-17

ACCUMULATOR
Index/Inspection, page 13-64
Disassembly/Reassembly, page 13-65
Accumulator Disposal, page 13-65

Pedal Height

Adjustment

1. Loosen the brake light switch locknut and back off the brake light switch until it is no longer touching the brake pedal.

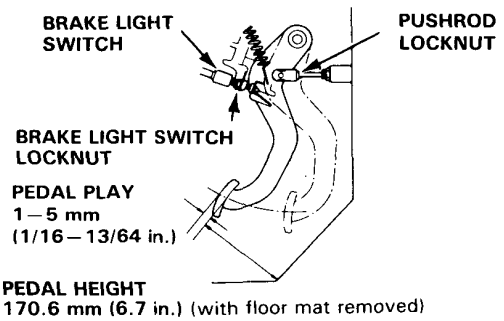

2. Loosen the pushrod locknut and screw the push rod in or out with pliers until the pedal height from the floor is 170.6 mm (6-11/16 in.). After adjustment, tighten the locknut firmly.

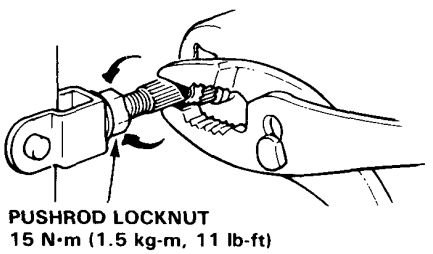

3. Screw in the brake light switch until its plunger is fully depressed (threaded end touching the pad on the pedal arm), then back off the switch 1/2 turn and tighten the lock nut firmly.
CAUTION: Check that the brake lights go off when the pedal is released.

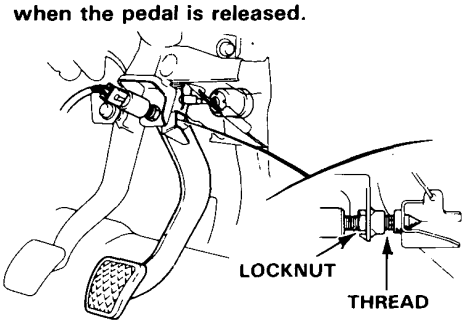

Brake Pedal Play Inspection:
Stop the engine and inspect the play by pushing the pedal by hand.

Brake Pedal Play: 1–5 mm (1/16–13/64 in).

NOTE: Do not adjust the pedal height with the push rod depressed.
CAUTION: If the pedal free play is out of specification, brake drag may occur.

Parking Brake

Adjustment

NOTE: After rear brake caliper servicing, loosen the parking brake adjusting nut, start the engine and depress the brake pedal several times to set the self-adjusting brakes before adjusting the brake pedal.

WARNING Block the front wheels before jacking up the rear of the car.

1. Raise the rear wheels off the ground.
2. Make sure the lever of the rear brake caliper contacts the brake caliper pin.

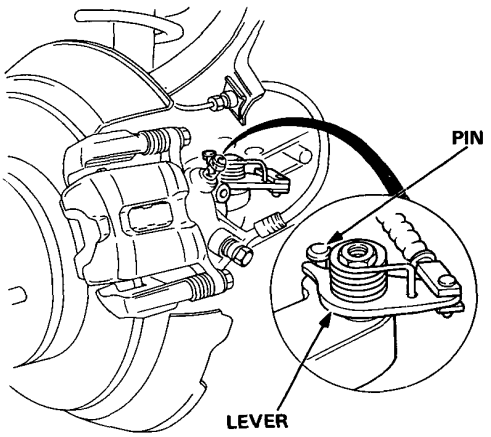

3. Pull the parking brake lever up one notch.
4. Tighten the adjusting nut until the rear wheels drag slightly when turned.
5. Release the parking lever and check that the rear wheels do not drag when turned. Readjust if necessary.
6. With the equalizer properly adjusted, the rear brakes should be fully applied when the parking brake lever is pulled up 7 to 11 clicks.

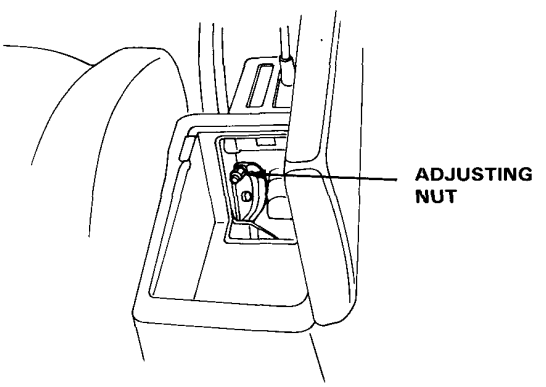

Brake Hoses/Pipes

Inspection/Connections

1. Inspect the brake hoses for damage, leaks, interference or twisting.
2. Check the brake lines for damage, rusting or leakage. Also check for bent brake lines.
3. Check for leaks at hose and line joints or connections, and retighten if necessary.

CAUTION: Replace the brake hose clip whenever the brake hose is serviced.

NOTE: LH Drive shown, RH Drive is similar.

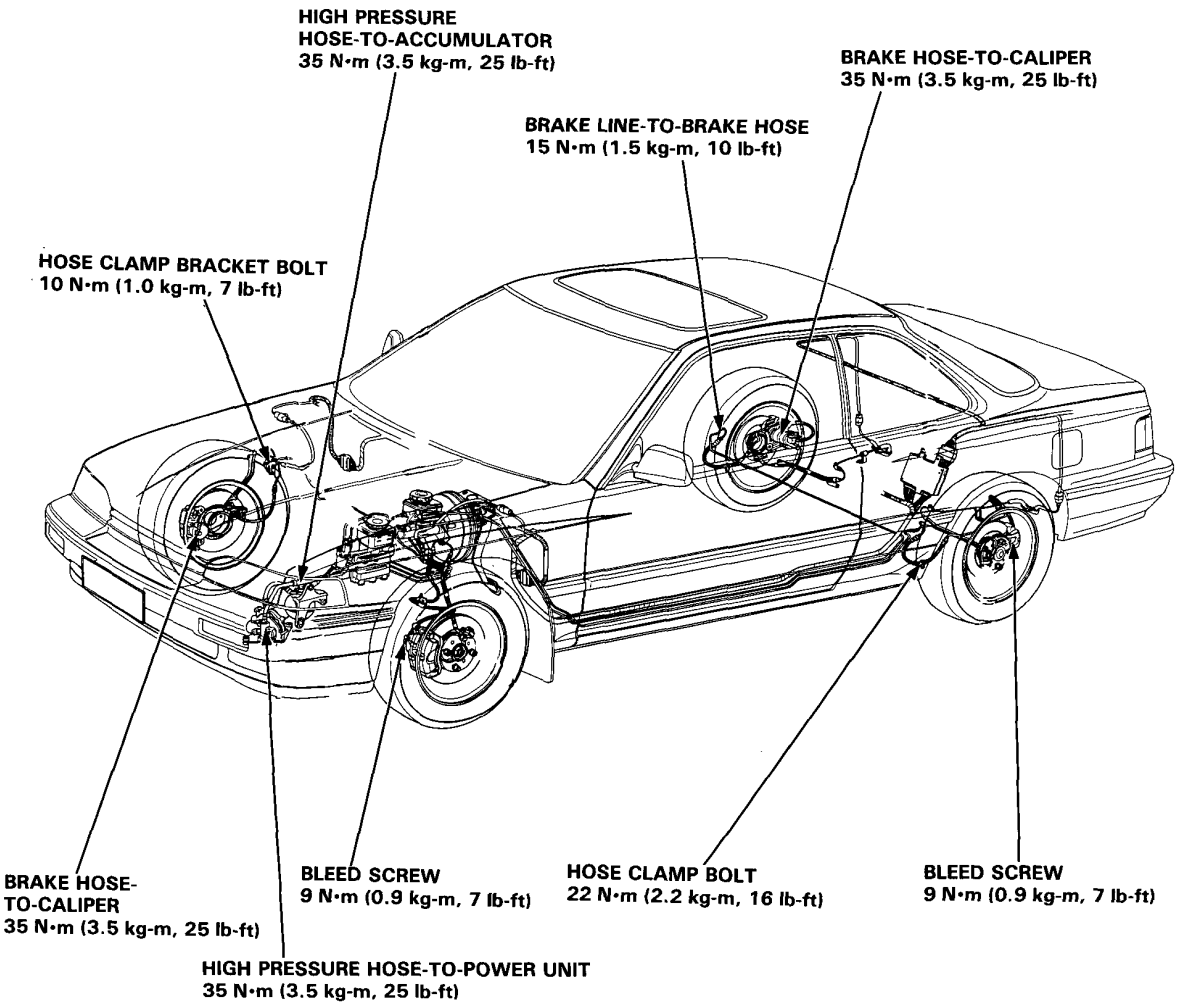

(cont'd)

Brake Hoses/Pipes

Inspection/Connections (cont'd)

CAUTION:

- The brake pipes and modulator pipe fittings are color coded.

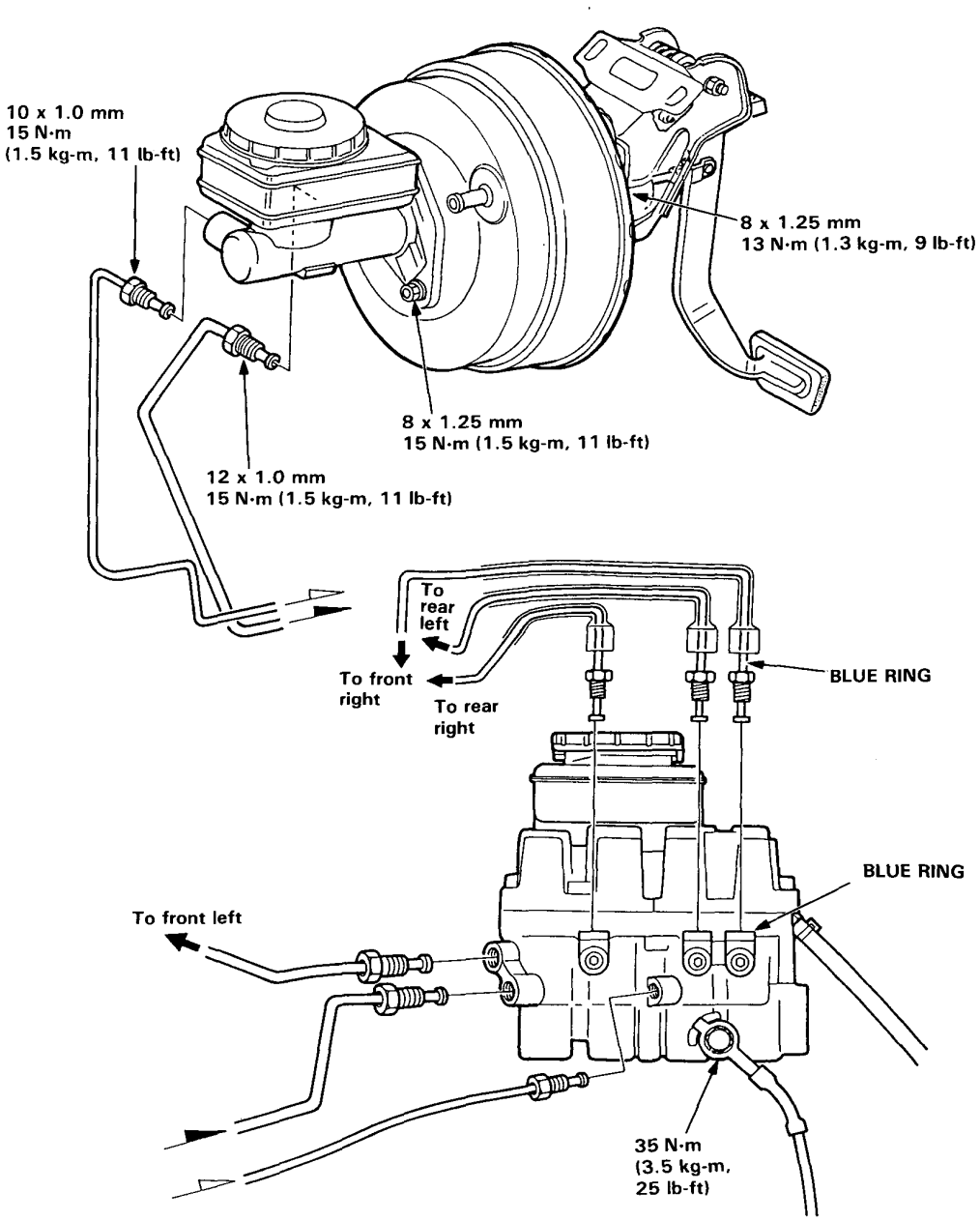

Test

Leak Test

1. Install the Brake Power Kit (07504–6340100) as shown.

2. Start the engine, adjust the engine speed with the accelerator pedal so that the vacuum gauge readings show 300–500 mmHg (11.8–19.7 inHg), then stop the engine.

3. Read the vacuum gauge.

   If the vacuum readings decreases 20 mmHg (0.8 inHg) or more after 30 seconds, check following parts for leaks.
   - Check valve
   - Vacuum hose
   - Seals
   - Diaphragm
   - Master cylinder O-ring and cup

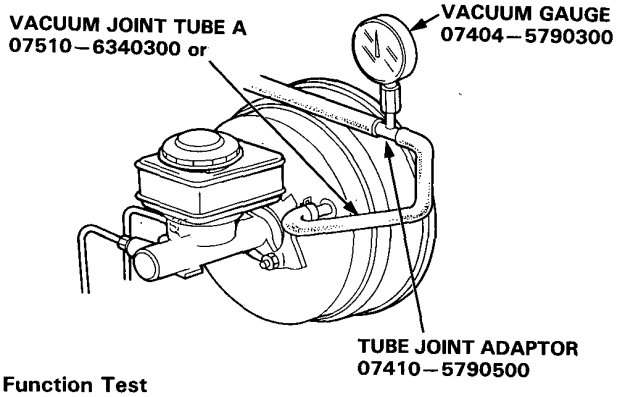

Function Test

1. Install the vacuum gauge as same the leak test.

2. Connect the oil pressure gauges to the master cylinder using the attachments as shown.

3. Bleed air through the valves.

   CAUTION: Avoid spilling brake fluid on painted, plastic or rubber partsas it may damage the finish.

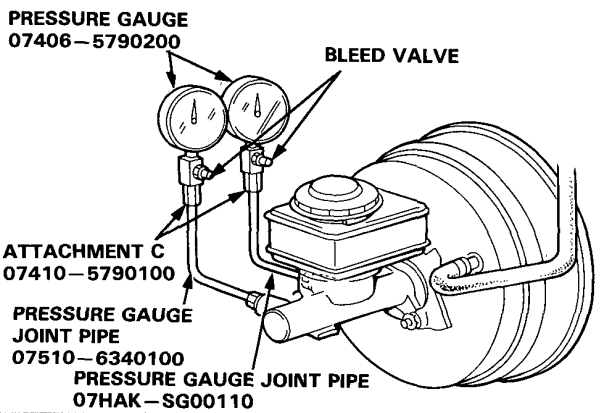

4. Start the engine.

5. Depress the brake pedal with a 200 N (20 kg, 44 lbs) of pressure. The following pressures should be observed at the pressure gauges in each vacuum.

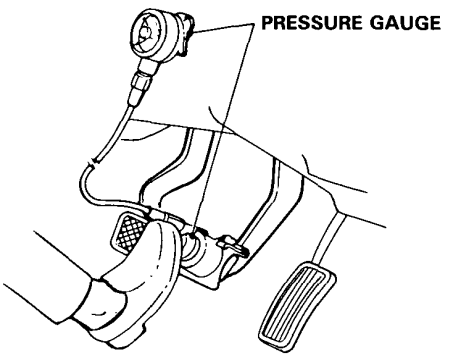

Vacuum mmHg	Line pressure kPa (kg/cm², psi)
0	774 (7.9, 112)
300	6135 (62.6, 890)
500	8252 (84.2, 1198)

6. Inspect the master cylinder pistons and cups in the readings do not fall within the limits shown above.

Check Valve Test

1. Remove the check valve, blow on one end of the hose and then the other; if you can blow through the booster end, but not through the manifold end, the check valve is OK.

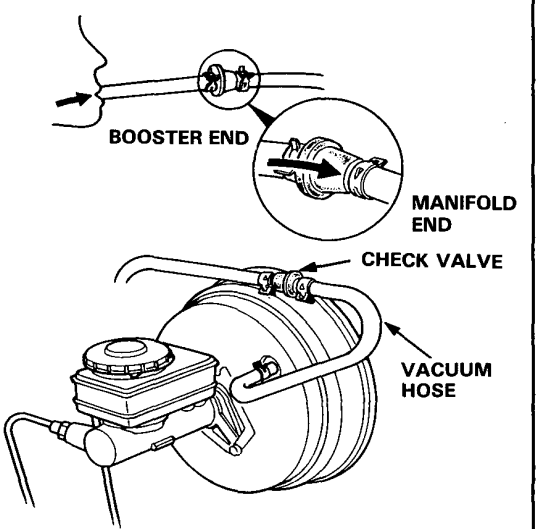

Pushrod Clearance Adjustment

NOTE: Master cylinder pushrod-to-piston clearance must be checked and adjustments made, if necessary, before installing master cylinder.

1. Using the Brake Booster Rod Adjustment Gauge, adjust bolt so the end of it contacts the end of master cylinder piston.

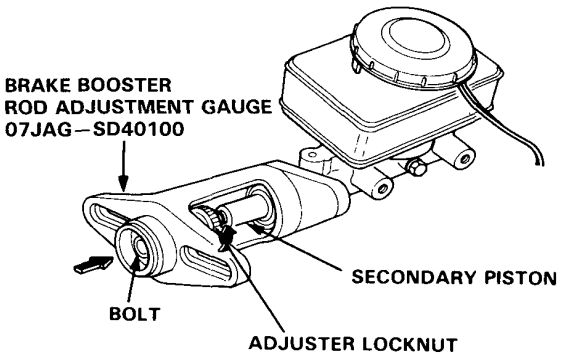

2. Without disturbing the adjusting bolt's position, install the master cylinder rod seal on the adjustment gauge and put the gauge upside down on the booster.
3. Install the master cylinder nuts and tighten to the specified torque.
4. Connect the booster in-line with a vacuum gauge (0–30 in Hg) to the booster's engine vacuum supply, and drow 500 mm Hg (20 in Hg) vacuum.
5. With a feeler gauge, measure the clearance between the gauge body and the adjusting nut as shown.

   CLEARANCE: 0.2±0.2 mm (0.008±0.008 in.)

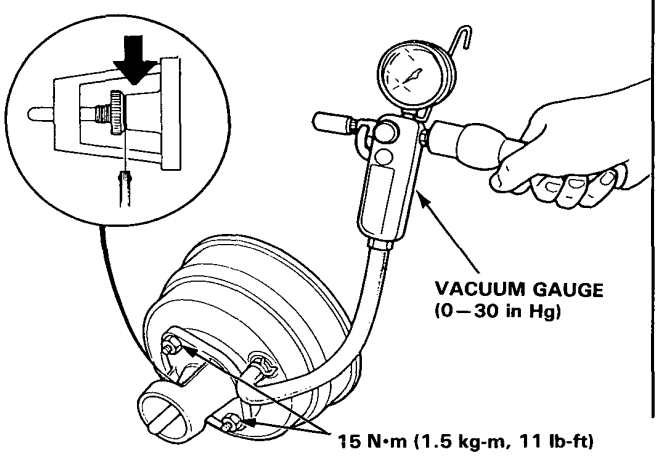

6. If the clearance is in correct remove the tool, and adjust the clearance by holding the pushrod and turning the adjuster in or out.

   CAUTION: Do not pull out the push rod from the brake booster.

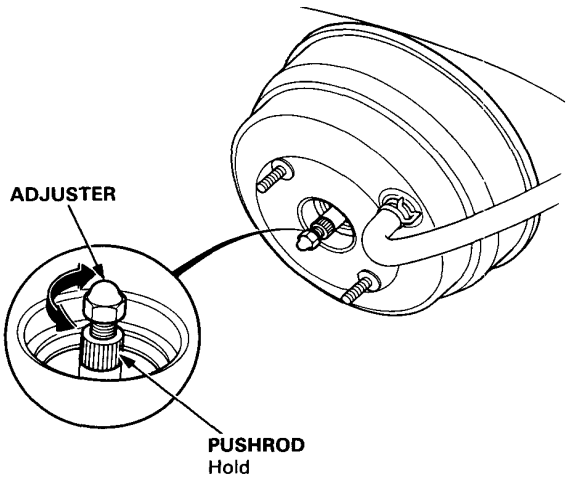

NOTE: If the clearance between the gauge body and adjuster locknut is 0 mm, the pushrod-to-piston clearance is 0.4 mm or more. If the clearance between the gauge body and adjuster lock nut is 0.4 mm, the pushrod-to-piston clearance is 0 mm.

7. Install the master cylinder.

Master Cylinder

Overhaul/Inspection

CAUTION:

- **Do not spill brake fluid on the car; it may damage the paint; if brake fluid does contact the paint, wash it off immediately with water.**
- **To prevent spills, cover the hose joints with rags or shop towels.**
- **Clean all parts in brake fluid and air dry; blow out all passages with compressed air.**
- **Before reassembling, check that all parts are free of dust and other foreign particles.**
- **Replace parts with new ones whenever specified to do so.**
- **Make sure no dirt or other foreign matter is allowed to contaminate the brake fluid.**
- **Do not mix different brands of brake fluid as they may not be compatible.**
- **Do not reuse the drained fluid.**

NOTE:

- Replace all rubber parts with new ones whenever the cylinder is disassembled.
- To prevent damage, liberally apply clean brake fluid to the piston cups before installation. Use special tool to install the cups.

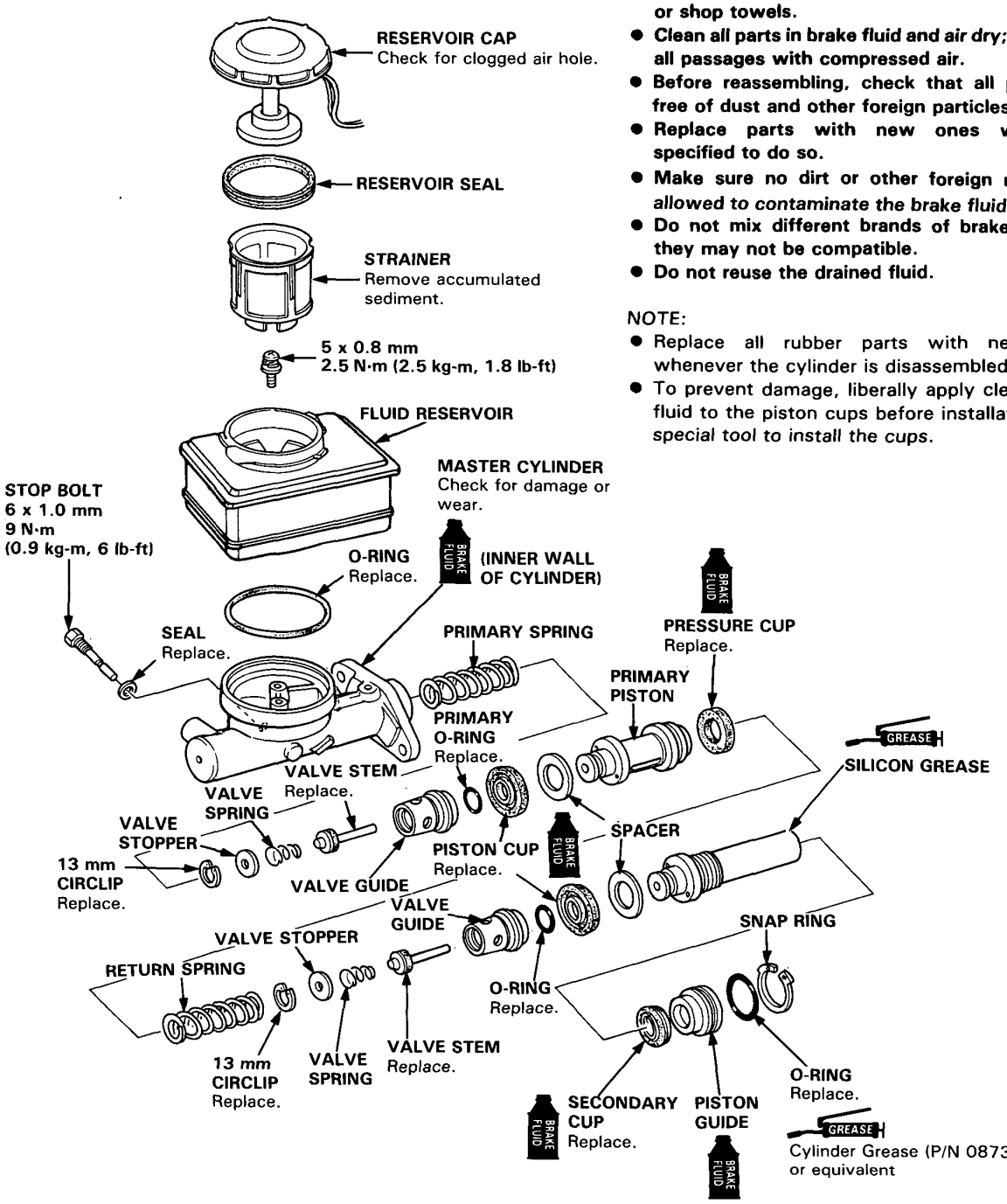

Master Cylinder

Disassembly

CAUTION:
- **Do not spill brake fluid on the car, it may damage the painted, plastic or rubber parts.**
- **To prevent spills, cover the hose joints with rags or shop towels.**
- **Use only new clean brake fluid.**
- **Clean all parts in brake fluid and air dry; blow out all passages with compressed air.**
- **Make sure no dirt or other foreign matter is allowed to contaminate the brake fluid.**
- **Be careful not to bend or damage the brake pipe when removing the master cylinder.**

1. Push the secondary piston assembly in, then remove the snap ring.

   CAUTION: Avoid damaging the master cylinder wall.

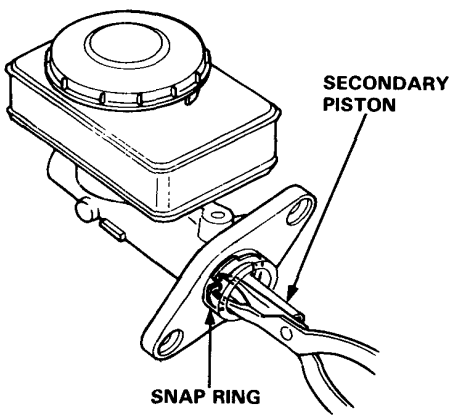

2. Remove the stop bolt while pushing in the secondary piston assembly.

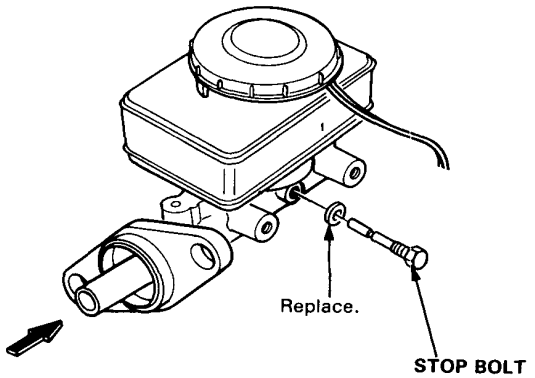

3. Remove the piston guide, secondary piston assembly and primary piston assembly.

   NOTE: If the primary piston assembly is difficult to remove, apply compressed air from the primary piston side outlet.

   CAUTION:
   - **Do not use high pressure air or bring the nozzle too close to the inlet.**
   - **Place a shop rag over the master cylinder to prevent the primary piston from becoming a projectile.**

Reassembly

CAUTION:

- **Do not spill brake fluid on the car; it may damage the paint; if brake fluid does contact the paint, wash it off immediately with water.**
- **To prevent spills, cover the hose joints with rags or shop towels.**
- **Clean all parts in brake fluid and air dry; blow out all passages with compressed air.**
- **Use only new clean brake fluid.**
- ***Before reassembling, check that all parts are free of dust and other foreign particles.***
- **Replace parts with new ones whenver specified to do so.**
- **Make sure no dirt or other foreign matter is allowed to contaminate the brake fluid.**
- **Do not mix different brands of brake fluid as they may not be compatible.**
- **Do not reuse the drained fluid.**

1. Coat the Cup Guide (special tool) with brake fluid, install the cup over the Cup Guide, then slide the cup onto the primary piston.

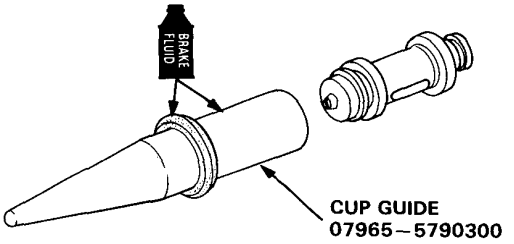

2. Install the spacer, piston cup and O-ring onto the primary piston.

3. Install the valve stem, valve spring and valve stopper on the valve guide and secure with circlip.

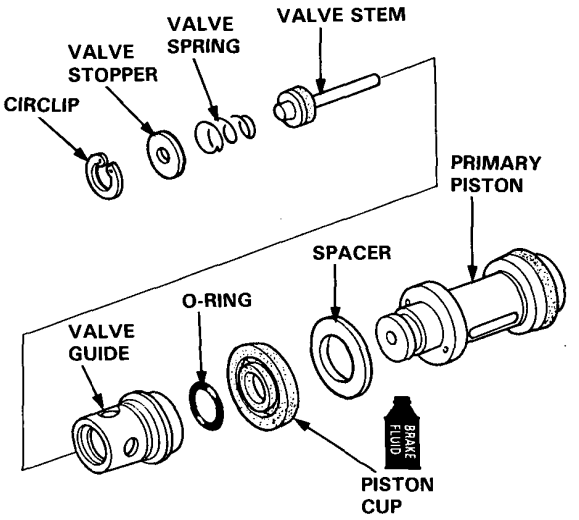

4. Install the valve guide in the primary piston.

PRIMARY PISTON ASSEMBLY

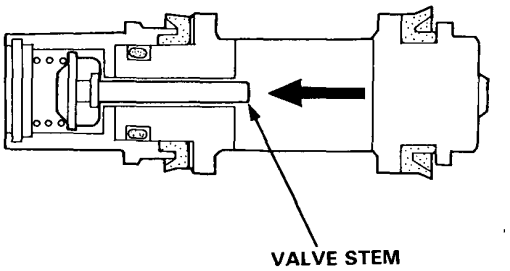

NOTE: Reaching through the primary piston stop bolt hole, lightly press on the valve stem to see if it moves smoothly.

5. Install the spacer, piston cup and O-ring onto the secondary piston sub-assembly.

6. Install the valve stem, valve spring and valve stopper on the valve guide and secure with circlip.

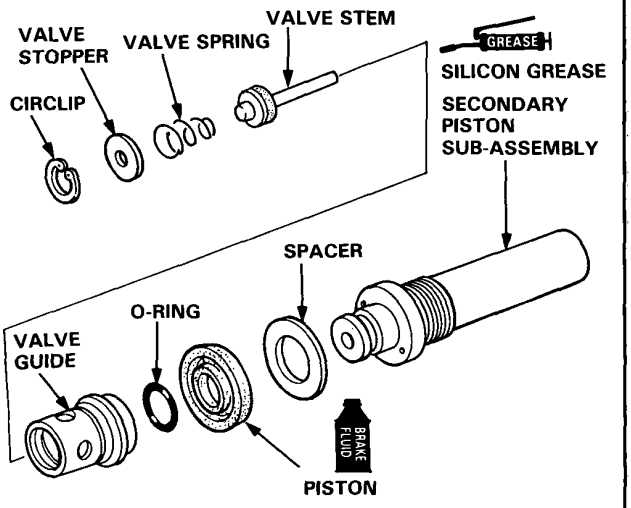

(cont'd)

Reassembly (cont'd)

7. Install the valve guide to the secondary piston assembly.

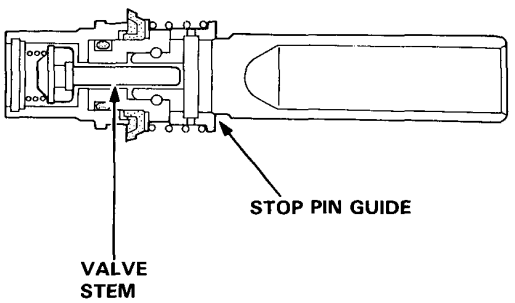

NOTE: Lightly press the stop pin guide to see if the valve stem moves smoothly.

8. Assemble the primary piston assembly, secondary piston assembly and piston guide assembly in the master cylinder body.

NOTE: Install the primary piston with the slot on the cylinder facing the stop bolt hole side.

9. Push the secondary piston in until slot aligns with the stop bolt hole, then install and tighten the stop bolt.

CAUTION:
- **Replace the stop bolt seal with a new one when ever disassembled.**
- **Apply brake fluid to the inner wall of the cylinder and piston cups, being careful that they are not turned inside out during installation.**

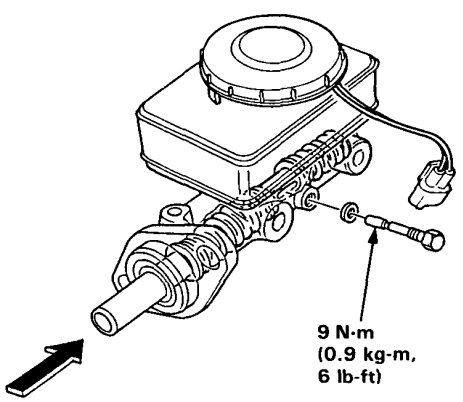

9. Press the secondary piston in and install the snap ring.

CAUTION: Avoid damaging the sliding surface of the secondary piston when installing the snap ring.

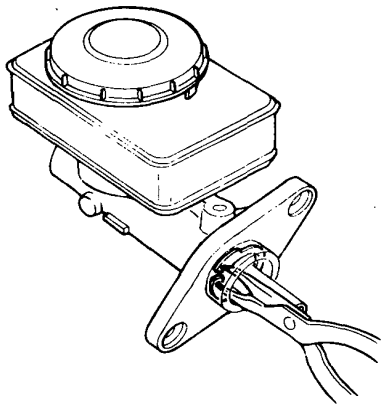

CAUTION: Make sure that there is no interference between the brake pipes and other parts when installing.

Index/Inspection

WARNING

- **Inhaled asbestos fibers have been found to cause respiratory disease and cancer. Never use an air hose or dry brush to clean brake assemblies.**
- **Use an OSHA-approved vacuum cleaner or alternate method approved by OSHA designed to minimize the hazard caused by airborne asbestos fibers.**

CAUTION:

- **Do not spill brake fluid on the car; it may damage the paint; if brake fluid does contact the paint, wash it off immediately with water.**
- **To prevent spills, cover the hose joints with rags or shop towels.**
- ***Clean all parts in brake fluid and air dry; blow out all passages with compressed air.***
- **Before reassembling, check that all parts are free of dust and other foreign particles.**
- **Replace parts with new ones whenever specified to do so.**
- **Make sure no dirt or other foreign matter is allowed to contaminate the brake fluid.**
- **Do not mix different brands of brake fluid as they may not be compatible.**
- **Do not reuse the drained fluid.**

NOTE:

- Coat piston, piston seal, and caliper bore with clean brake fluid.
- Replace all rubber parts with new ones whenever disassembled.

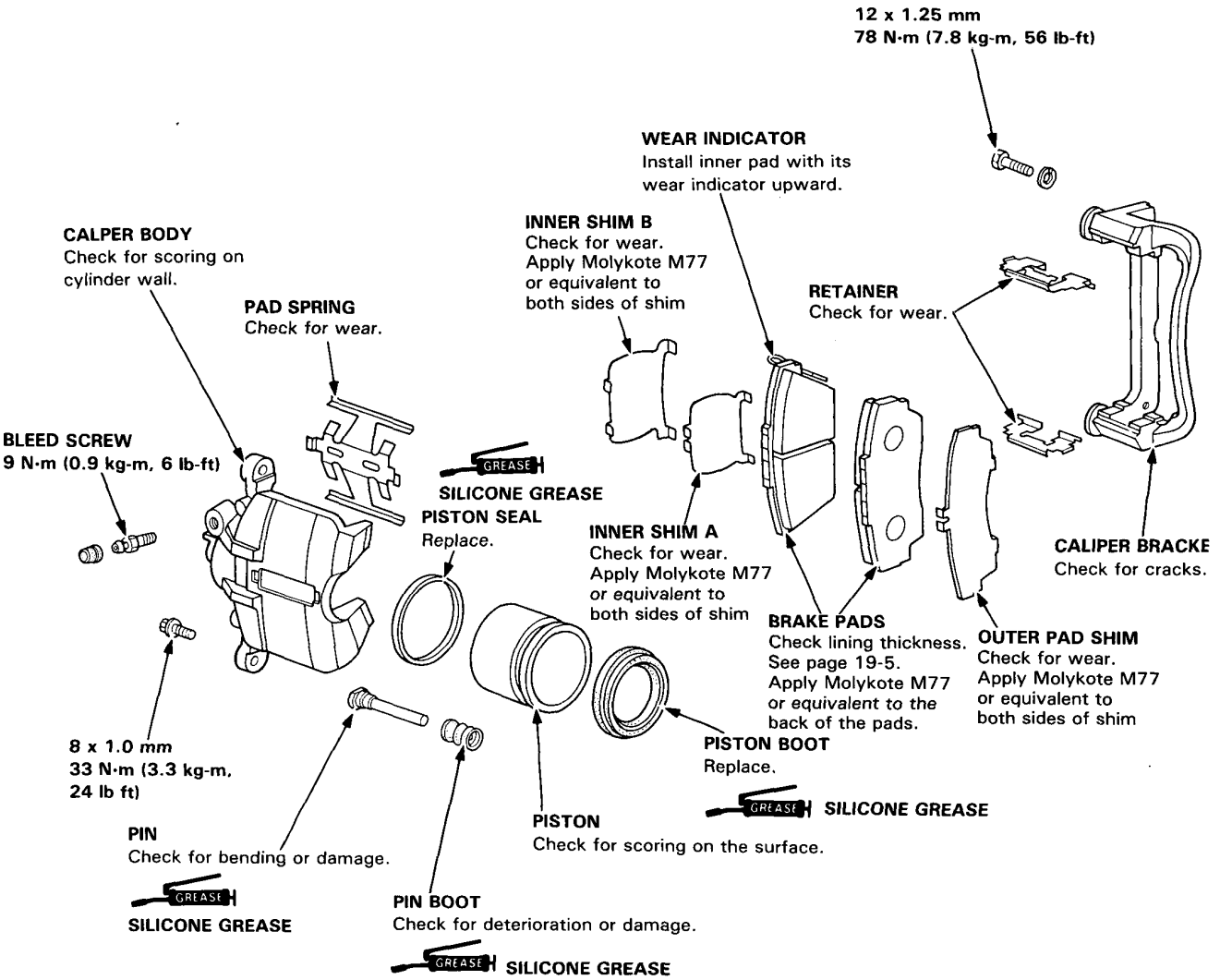

Brake Pad

Inspection/Replacement

WARNING

- **Inhaled asbestos fibers have been found to cause respiratory disease and cancer. Never use an air hose or dry brush to clean brake assemblies.**
- **Use an OSHA-approved vacuum cleaner or alternate method approved by OSHA designed to minimize the hazard caused by airborne asbestos fibers.**

1. Remove the front wheels and support the front of car on safety stands.

2. Remove caliper bolt and pivot caliper up out of the way.

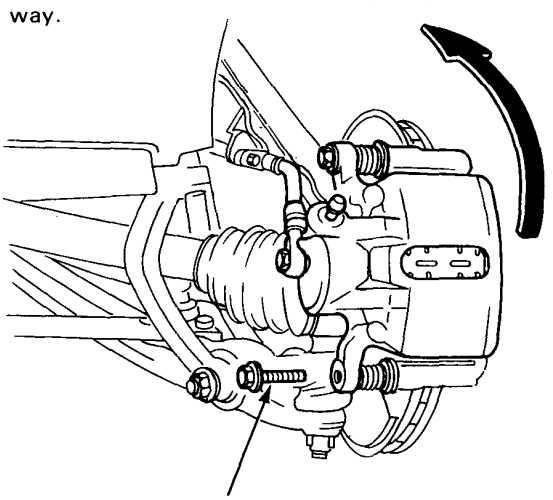

3. Remove the pad shim, pad retainers and pads.

4. Using a vernier caliper, measure the thickness of each brake pad lining.

   Brake Pad Thickness:
   Standard: 11.5 mm (0.45 in)
   Service Limit: 3.0 mm (0.12 in)

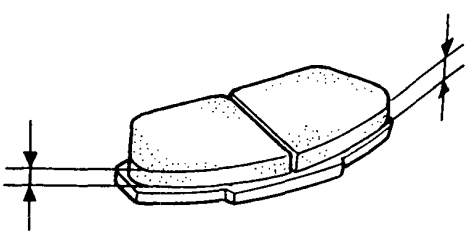

NOTE: Measurement does not include pad backing thickness.

5. If lining thickness is less than service limit, replace both pads as a set.

   NOTE: Engagement of the brake may require a greater pedal stroke immediately after the brake pads have been replaced as a set. Several applications of the brake pedal will restore the normal pedal stroke.

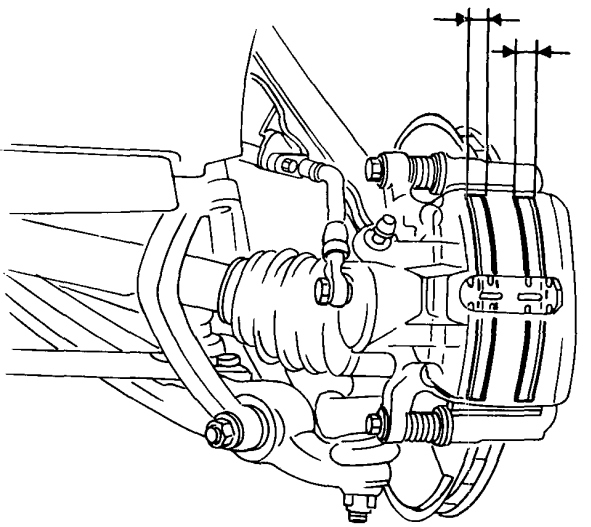

6. Clean the caliper thoroughly; remove any rust, and check for grooves or cracks.

7. Install the pad retainers.

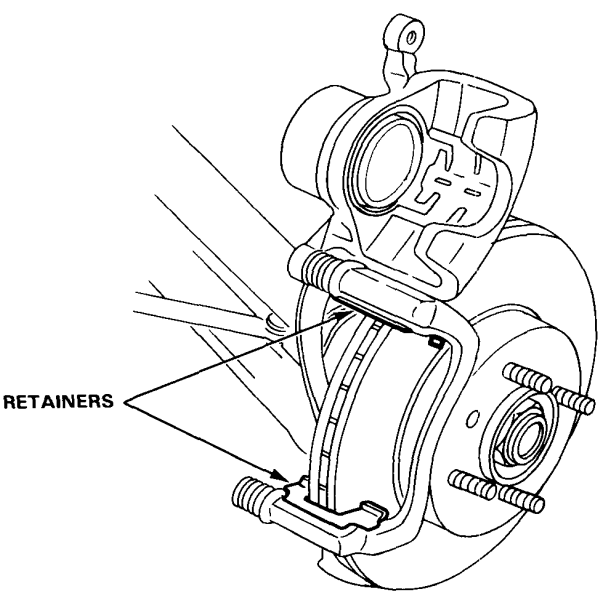

8. Apply MOLYKOTE M77 or equivalent to both surfaces of the shim and back of the pads.

9. Install the brake pads.

   NOTE: Apply MOLYKOTE M77 or equivalent between the shims and pads.

10. Install the brake pad shims correctly.

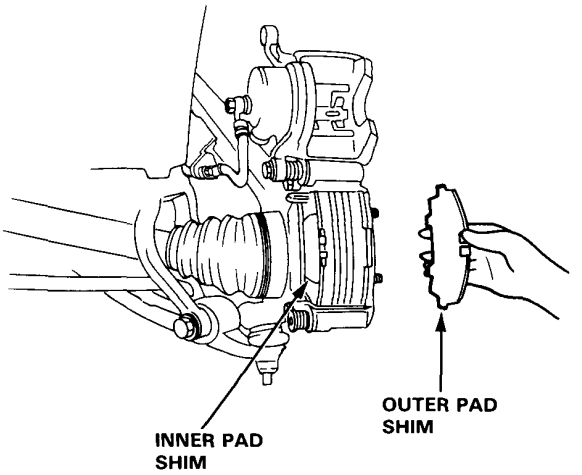

11. Push in the piston so that the caliper will fit over the pads.

12. Pivot the caliper down into position, then install the caliper bolt and tighten to 33 N•m (3.3 kg-m, 24 lb-ft).

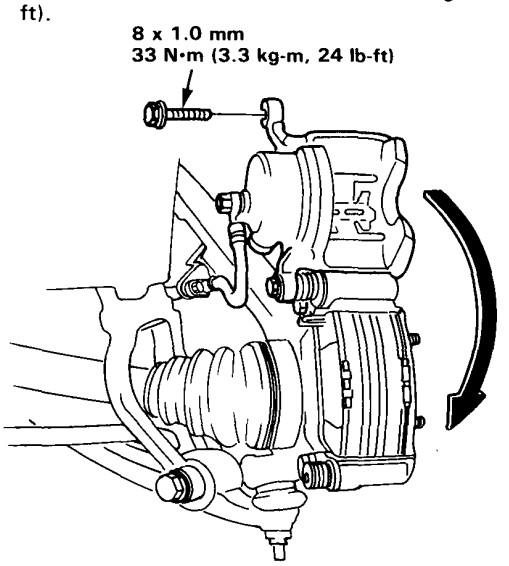

13. Depress the brake pedal several times to make sure the brakes work, then road-test.

Disassembly

CAUTION:
- **Before reassembling, check that all parts are free of dust and other foreign particles.**
- ***Replace parts with new ones whenever specified to do so.***
- **Use only clean brake fluid.**
- **Make sure no dirt or other foreign matter is allowed to contaminate the brake fluid.**
- **Do not mix different brands of brake fluid as they may not be compatible.**
- **Do not spill brake fluid on the car, it may damage the paint; if brake fluid does contact the paint, wash it off immediately with water.**

1. Remove the banjo bolt and disconnect the brake hose from the caliper.

2. Remove the caliper bolts, then remove the caliper.

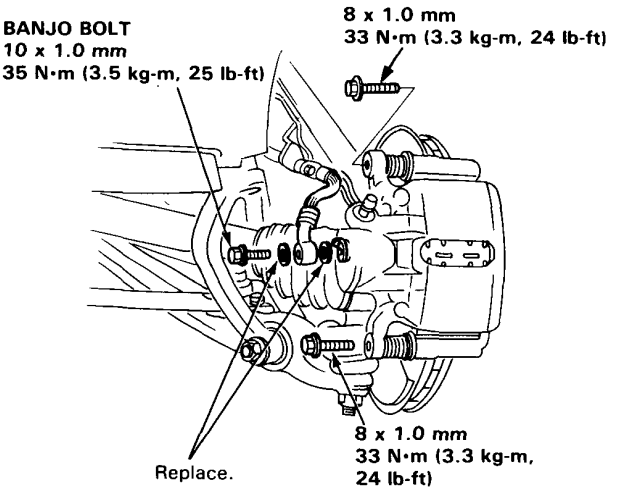

3. Remove the pad spring from the caliper body.

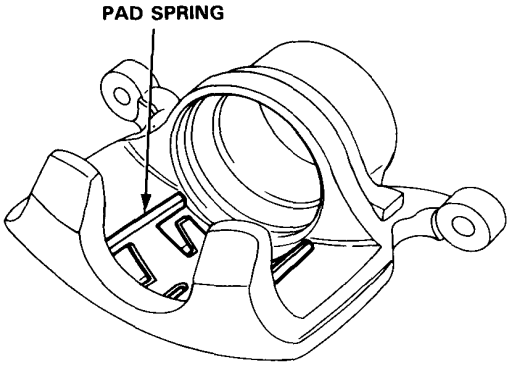

(cont'd)

8. Apply MOLYKOTE M77 or equivalent to both surfaces of the shim and back of the pads.

9. Install the brake pads.

   NOTE: Apply MOLYKOTE M77 or equivalent between the shims and pads.

10. Install the brake pad shims correctly.

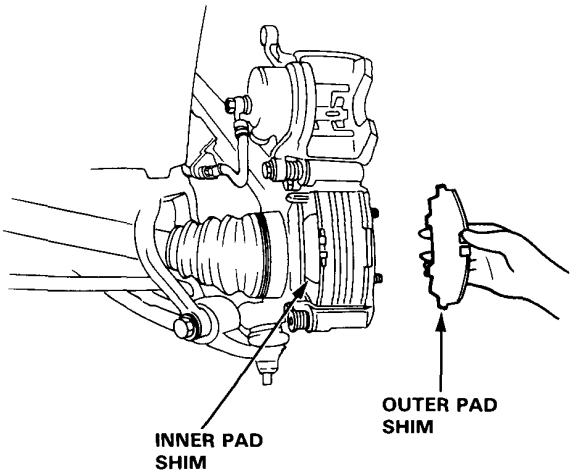

11. Push in the piston so that the caliper will fit over the pads.

12. Pivot the caliper down into position, then install the caliper bolt and tighten to 33 N•m (3.3 kg-m, 24 lb-ft).

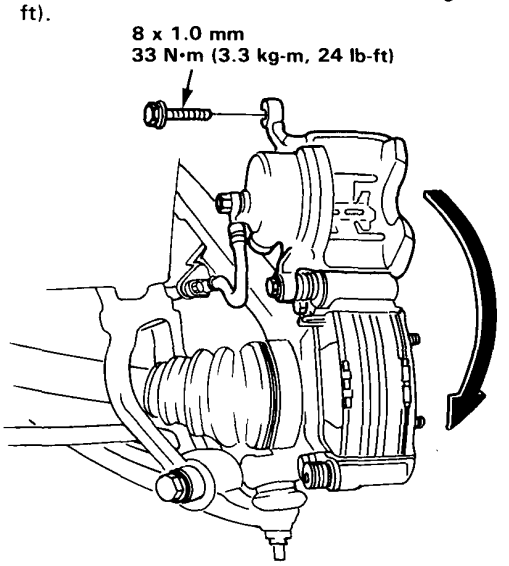

13. Depress the brake pedal several times to make sure the brakes work, then road-test.

Disassembly

CAUTION:
- **Before reassembling, check that all parts are free of dust and other foreign particles.**
- ***Replace parts with new ones whenever specified to do so.***
- **Use only clean brake fluid.**
- **Make sure no dirt or other foreign matter is allowed to contaminate the brake fluid.**
- **Do not mix different brands of brake fluid as they may not be compatible.**
- **Do not spill brake fluid on the car, it may damage the paint; if brake fluid does contact the paint, wash it off immediately with water.**

1. Remove the banjo bolt and disconnect the brake hose from the caliper.

2. Remove the caliper bolts, then remove the caliper.

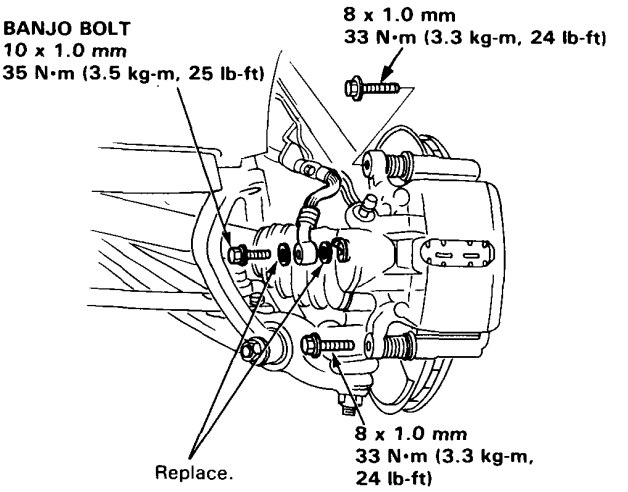

3. Remove the pad spring from the caliper body.

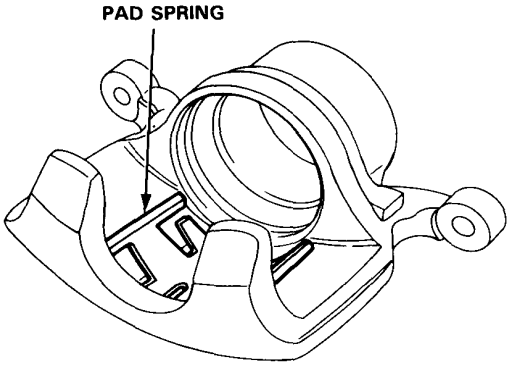

(cont'd)

Disassembly (cont'd)

4. Place a wooden block or shop rag in the caliper opposite the piston, then carefully remove the piston from the caliper by applying air pressure through the brake line hole.

WARNING
- **Do not place your fingers in front of the piston.**
- **Do not use high air pressure; use an OSHA-approved 30 PSI nozzle.**

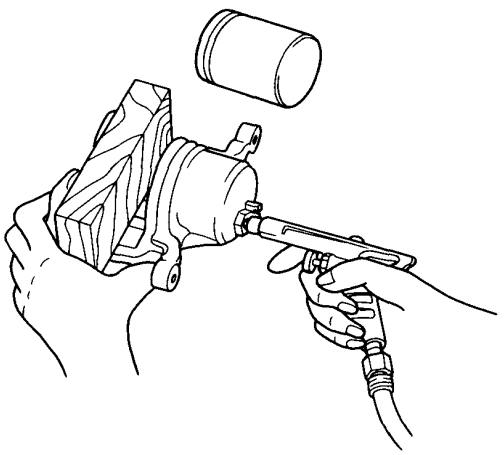

5. Remove the piston boot and piston seal.

CAUTION: Take care not to damage the cylinder.

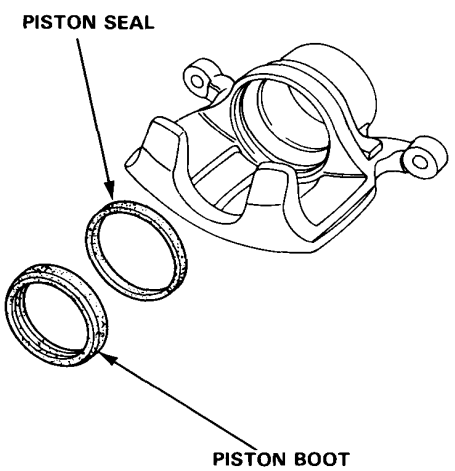

Reassembly

CAUTION:
- **Before reassembling, check that all parts are free of dust and other foreign particles.**
- **Replace parts with new ones whenever specified to do so.**
- **Use only clean brake fluid.**
- **Make sure no dirt or other foreign matter is allowed to contaminate the brake fluid.**
- **Do not mix different brands of brake fluid as they may not be compatible.**
- **Do not spill brake fluid on the car; it may damage the paint, if brake fluid does contact the paint; wash it off immediately with water.**

1. Clean the piston and caliper bore with brake fluid and inspect for wear or damage.

2. Apply silicone grease to a new piston seal, then install the piston seal in the cylinder groove.

3. Apply silicone grease to a new piston boot, then install the piston boot.

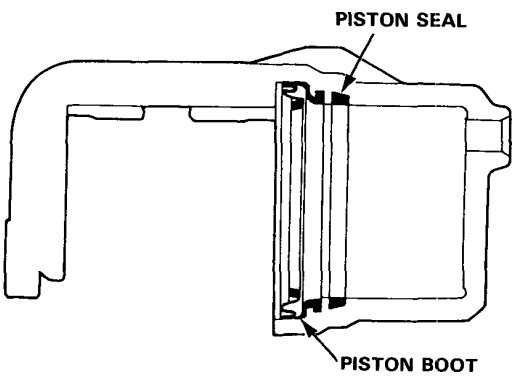

4. Lubricate the caliper cylinder and piston with brake fluid, then install the piston in the cylinder with the dished end facing in .

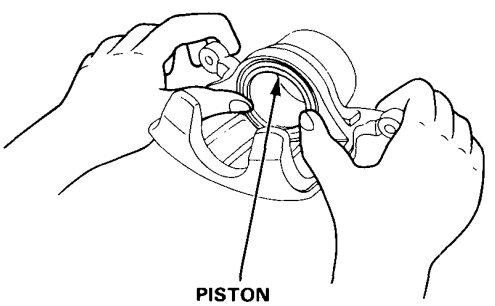

5. Reinstall the caliper in the reverse order of removal.

6. Fill the brake reservoir up and bleed the brake system (page 13-27).

Disassembly (cont'd)

4. Place a wooden block or shop rag in the caliper opposite the piston, then carefully remove the piston from the caliper by applying air pressure through the brake line hole.

WARNING
- **Do not place your fingers in front of the piston.**
- **Do not use high air pressure; use an OSHA-approved 30 PSI nozzle.**

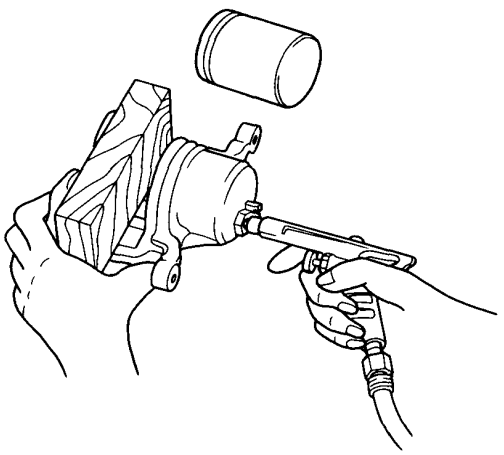

5. Remove the piston boot and piston seal.

CAUTION: Take care not to damage the cylinder.

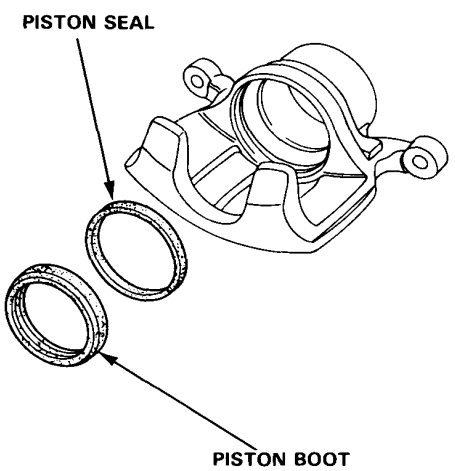

Reassembly

CAUTION:
- **Before reassembling, check that all parts are free of dust and other foreign particles.**
- **Replace parts with new ones whenever specified to do so.**
- **Use only clean brake fluid.**
- **Make sure no dirt or other foreign matter is allowed to contaminate the brake fluid.**
- **Do not mix different brands of brake fluid as they may not be compatible.**
- **Do not spill brake fluid on the car; it may damage the paint, if brake fluid does contact the paint; wash it off immediately with water.**

1. Clean the piston and caliper bore with brake fluid and inspect for wear or damage.

2. Apply silicone grease to a new piston seal, then install the piston seal in the cylinder groove.

3. Apply silicone grease to a new piston boot, then install the piston boot.

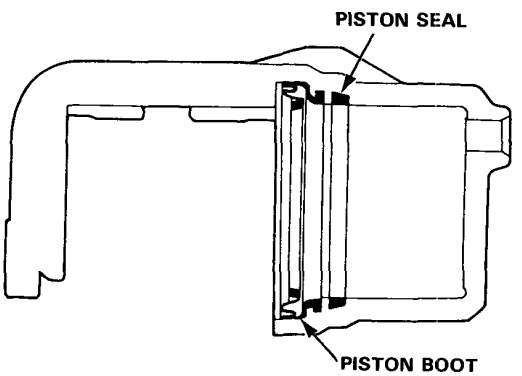

4. Lubricate the caliper cylinder and piston with brake fluid, then install the piston in the cylinder with the dished end facing in .

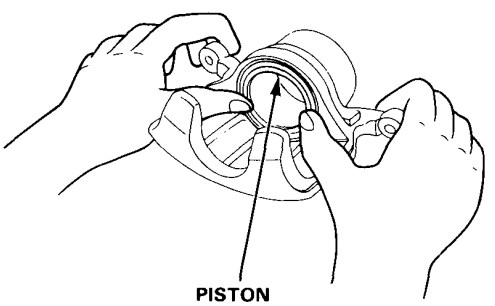

5. Reinstall the caliper in the reverse order of removal.

6. Fill the brake reservoir up and bleed the brake system (page 13-27).

Brake Disc

Run-Out Inspection

1. Remove the front wheels, and support the front of the car on safety stands.

2. Remove caliper pin bolt, then pivot the caliper up out of the way on the caliper pin bolt, and remove the pads and pad retainers.

3. Inspect the disc surface for grooves, cracks, and rust. Clean the disc thoroughly and remove all rust.

4. Use the lug nuts to hold the disc securely against the hub, then mount a dial indicator as shown.

   Brake Disc Runout:
   Service Limit: 0.10 mm (0.004 in)

   Max. Refinishing Limit: 19 mm (0.75 in.)

5. If the disc is beyond the service limit, refinish the rotor with an on-car brake lathe. The Kwik-Lathe produced by Kwik-Way Manufacturing Co. and the Front Wheel Drive Disc Brake Lathe offered by Snap-on Tools Co. are approved for this operation.

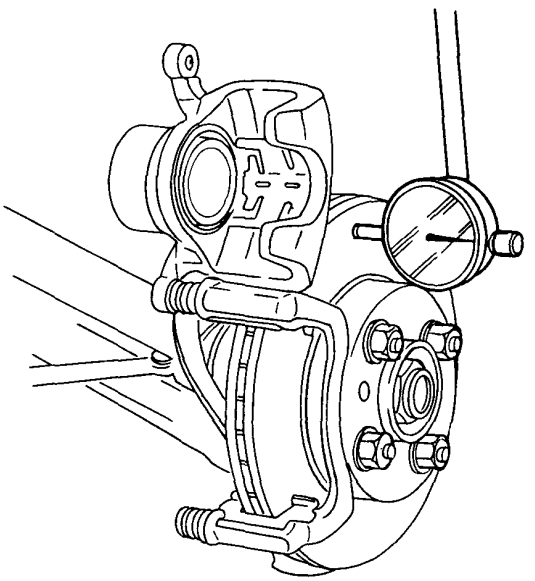

Thickness and Parallelism Inspection

1. Remove the front wheels, and support the front of car on safety stands.

2. Move the caliper and pads out of the way as described in the preceding column.

3. Using a micrometer, measure disc thickness at eight points, approximately 45° apart and 10 mm (0.39 in.) in from the outer edge of the disc.

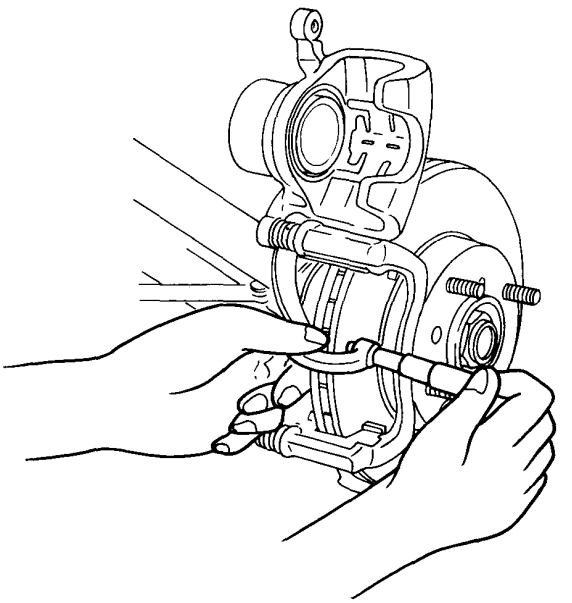

   Brake Disc Thickness:
   Standard: 21 mm (0.83 in.)
   Max. Refinishing Limit: 19 mm (0.75 in.)

   Brake Disc Parallelism:
   The difference between any thickness measurements should not be more than 0.015 mm (0.0006 in.).

4. If the disc is beyond the limits for thickness or parallelism, refinish the rotor with an on-car brake lathe. The Kwik-Lathe produced by Kwik-Way Manufacturing Co. and the Front Wheel Drive Disc Brake Lathe offered by Snap-on Tools Co. are approved for this operation.

   NOTE: A new disc should be refinished if its run-out is greater than 0.10 mm (0.004 in.).

Index/Inspection

WARNING

- **Inhaled asbestos fibers have been found to cause respiratory disease and cancer. Never use an air hose or dry brush to clean brake assemblies.**
- **Use an OSHA-approved vacuum cleaner or alternate method approved by OSHA designed to minimize the hazard caused by airborne asbestos fibers.**

CAUTION:

- **Do not spill brake fluid on the car; it may damage the paint; if brake fluid does contact the paint, wash it off immediately with water.**
- **To prevent spills, cover the hose joints with rags or shop towels.**
- **Clean all parts in brake fluid and air dry; blow out all passages with compressed air.**
- **Before reassembling, check that all parts are free of dust and other foreign particles.**
- **Replace parts with new ones whenever specified to do so.**
- **Make sure no dirt or other foreign matter is allowed to contaminate the brake fluid.**
- **Do not mix different brands of brake fluid as they may not be compatible.**
- **Do not reuse the drained fluid.**

NOTE:

- Coat piston, piston seal, and caliper bore with clean brake fluid.
- Replace all rubber parts with new ones whenever disassembled.

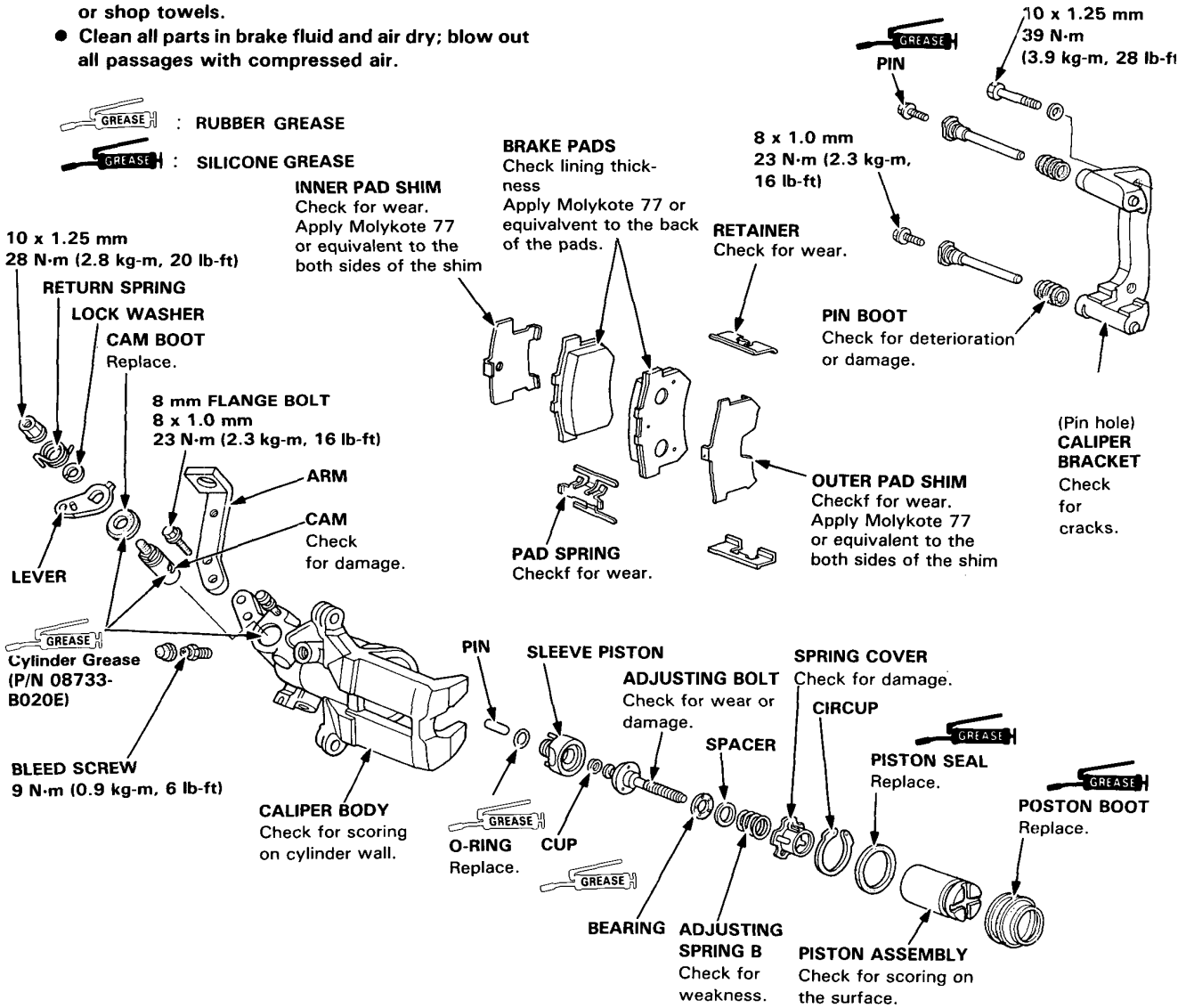

Inspection and Replacement

1. Block the front wheels, support the rear of car on safety stands, then remove the rear wheels.

2. Remove the two caliper mounting bolts and the caliper from the bracket.

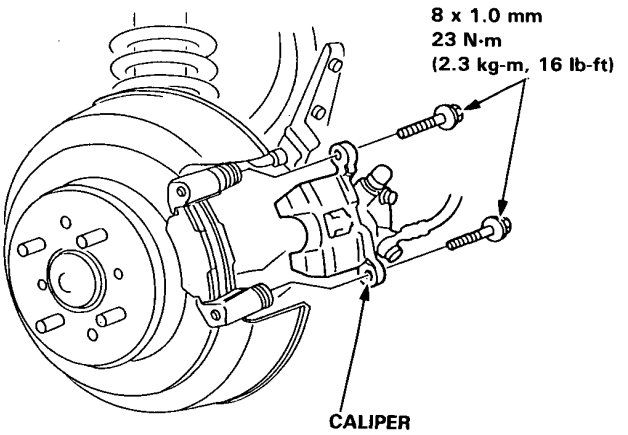

3. Remove the pads and measure the thickness of each brake pad lining using a vernier caliper.

Brake Pas Thickness:
Standard: 10.0 mm (0.39 in)
Service limit 1.6 mm (0.06in)

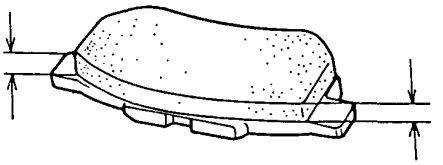

4. If the lining thickness is less than service limit, replace the brake pads as a set.

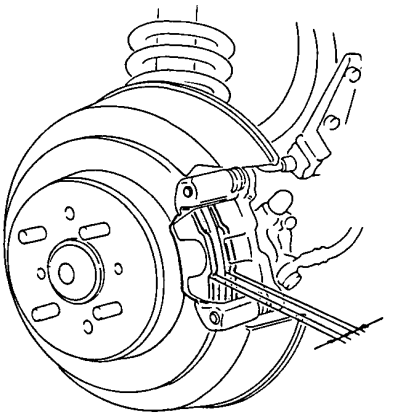

5. Inspect the disc surface for grooves, cracks, and rust. Clean the disc thoroughly and remove all rust.

6. Mount dial indicator as shown and measure the run-out at 10 mm (0.39 in) from the outer edge of the disc.

CAUTION: Use wheel nuts and 3 mm thickness washers to hold the disc securely.

Brake Disc Run-out:
Service Limit: 0.10 mm (0.004in)

Replace the brake disc if beyond the service limit.

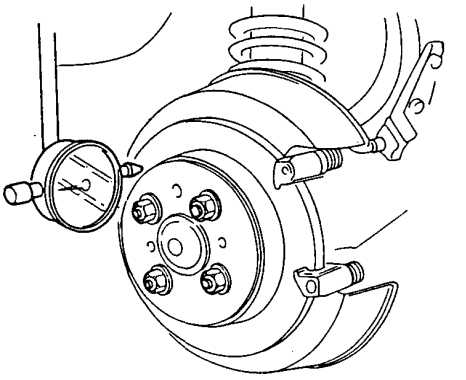

(cont'd)

Inspection and Replacement (cont'd)

7. Using a micrometer, measure the rear brake disc thickness at eight points, approximately 45 apart and 10 mm (0.39 in) from the outer edge of the disc.

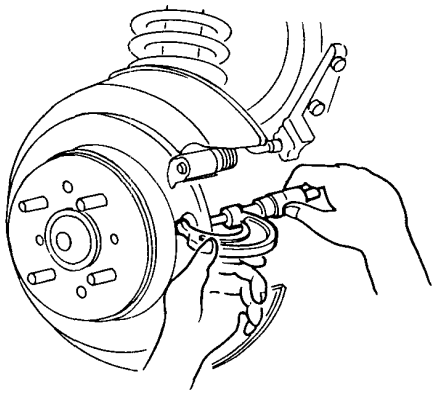

8. Replace the disc if it exceeds the following service limits:

   Brake Disc Thickness:
   Standard: 10.0 mm (0.39 in)
   Service limit: 8.0 mm (0.31 in)

   Brake Disc Parallelism:
   The difference between any thickness measurements should not be more than 0.015 mm (0.0006 in).

9. Replace the brake disc if beyond the limits.

   NOTE: A now disc should be ground if its run-out is greater than 0.10 mm (0.004 in).

10. Remove the two caloper bracket mounting bolts and caliper bracket.

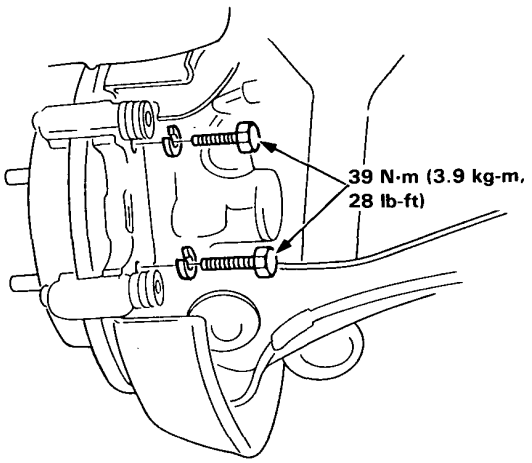

11. Remove the two 6 mm screws and brake disc.

    NOTE: If the brake disc is difficult to remove, install 8 mm bolts into the threaded holes and tighten them.

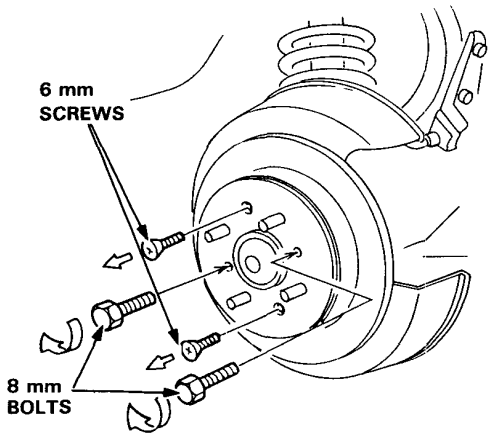

12. Install the new brake disc.

13. Clean the caliper bracket and retainers, then install the caliper bracket with two bolts and retainers.

14. Apply Molykote 77 or equivalent to the both sides of the pad shims and back of the pads. Install the new brake pads and pad shims onto the caliper bracket.

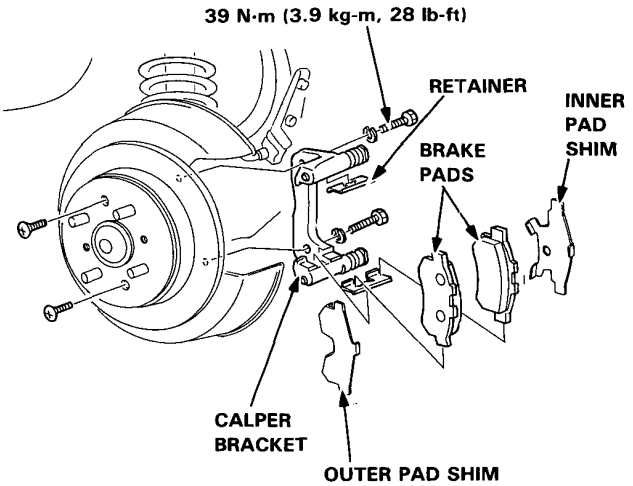

15. Rotate the caliper piston clockwise into place in the cylinder, then align the cutout in the piston with the tab on the inner pad by turning back the piston back.

CAUTION: Lubricate the boot with silicone to avoid twisting the piston boot. If the piston boot is twisted, back it out so it sits properly.

16. Install the brake caliper.

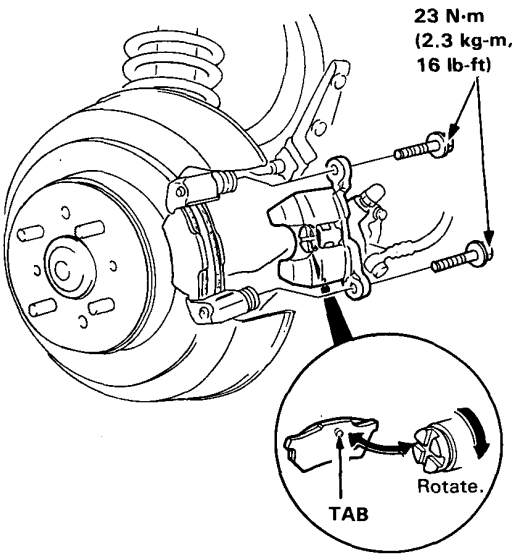

Disassembly

CAUTION:
- **Make sure all parts are clean before reassembly.**
- **Use only new replacement parts.**
- **Use only new clean brake fluid.**
- **Do not allow dirt or other foreign matter to contaminate the brake fluid.**
- **Do not mix different brands of brake fluid.**
- **Avoid spilling brake fluid on painted, plastic or rubber surfaces as its can damage the finish. Wash spilled brake fluid off immediately with clean water.**

1. Remove the caliper shield.

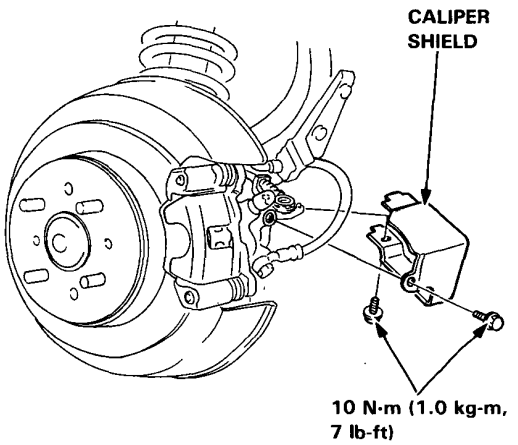

2. Disconnect the parking brake cable from the lever on the caliper by removing the lock pin.

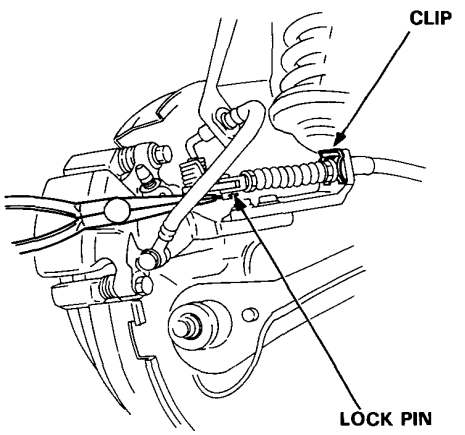

(cont'd)

15. Rotate the caliper piston clockwise into place in the cylinder, then align the cutout in the piston with the tab on the inner pad by turning back the piston back.

CAUTION: Lubricate the boot with silicone to avoid twisting the piston boot. If the piston boot is twisted, back it out so it sits properly.

16. Install the brake caliper.

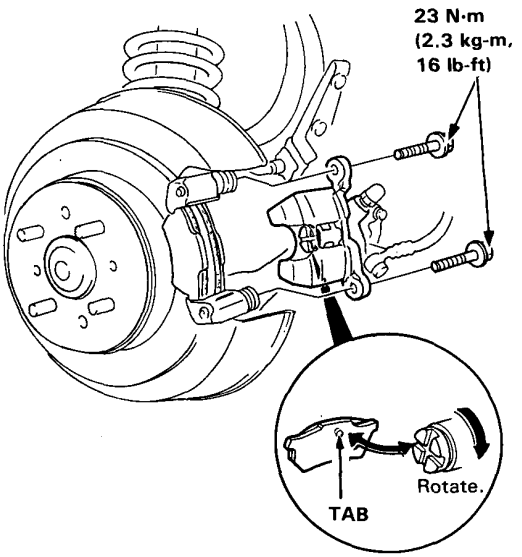

Disassembly

CAUTION:
- **Make sure all parts are clean before reassembly.**
- **Use only new replacement parts.**
- **Use only new clean brake fluid.**
- **Do not allow dirt or other foreign matter to contaminate the brake fluid.**
- **Do not mix different brands of brake fluid.**
- **Avoid spilling brake fluid on painted, plastic or rubber surfaces as its can damage the finish. Wash spilled brake fluid off immediately with clean water.**

1. Remove the caliper shield.

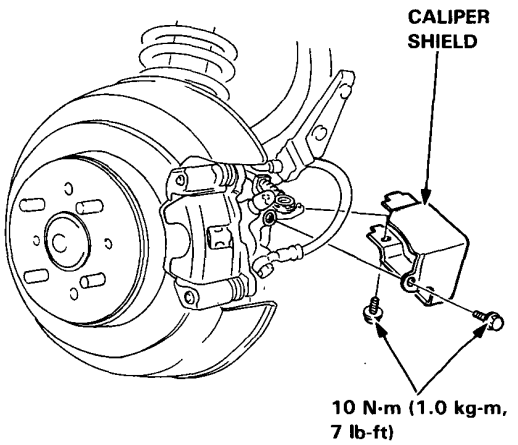

2. Disconnect the parking brake cable from the lever on the caliper by removing the lock pin.

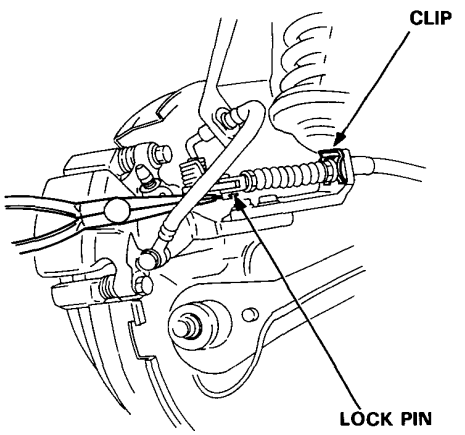

(cont'd)

Disassembly (cont'd)

3. Remove the banjo bolt and disconnect the brake hose from the caliper.

4. Remove the two caliper mounting bolts and the caliper from the bracket.

CAUTION:
- **Thoroughly clean the outside of the caliper to prevent dust and dirt from entering inside.**
- **Plug the end of the brake hose to prevent brake fluid from flowing out.**

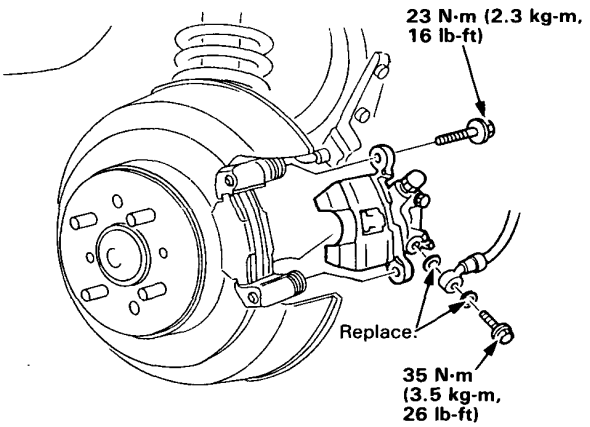

5. Remove the pad spring from the caliper.

6. Remove the piston and piston boot while rotating the piston.

CAUTION: Avoid damaging the piston and piston boot.

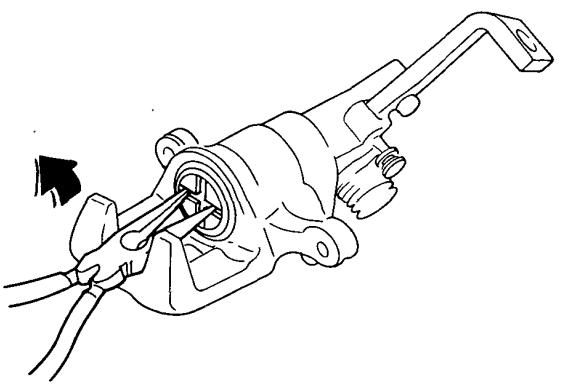

7. Remove the circlip, then washer, adjusting spring A, and the adjusting nut from the piston.

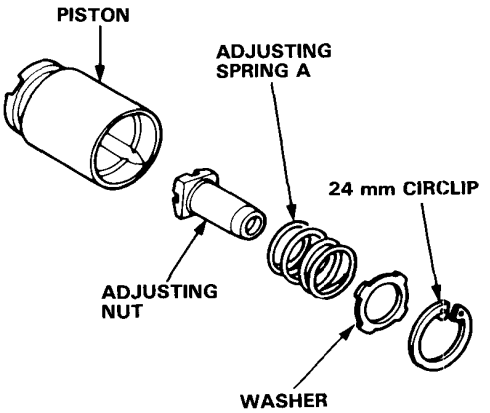

8. Remove the piston seal.

CAUTION: Take care not to damage the cylinder bore.

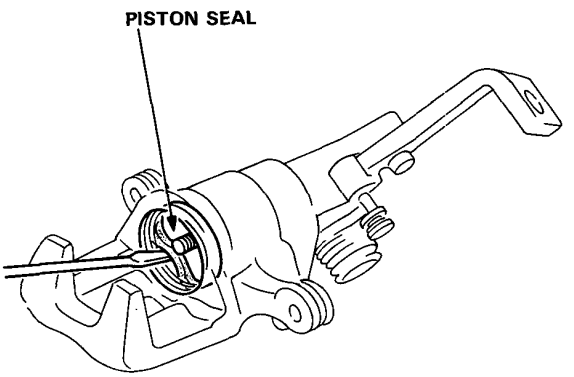

9. Adjust the brake spring compressor (special tool) as shown.

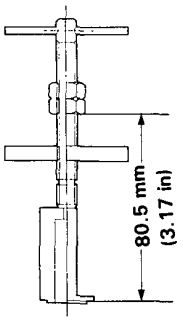

10. Install the special tool between the caliper body and spring guide as shown.

11. Compress the adjusting spring B by turning the shaft of the special tool, then remove the circlip with snap ring pliers.

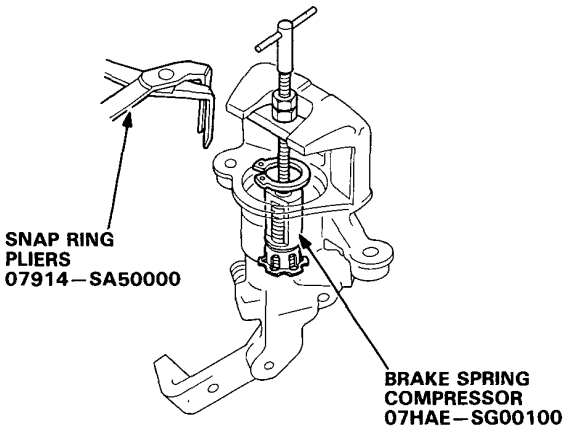

12. Remove the spring cover, adjusting spring B, spacer, bearing A and adjusting bolt.

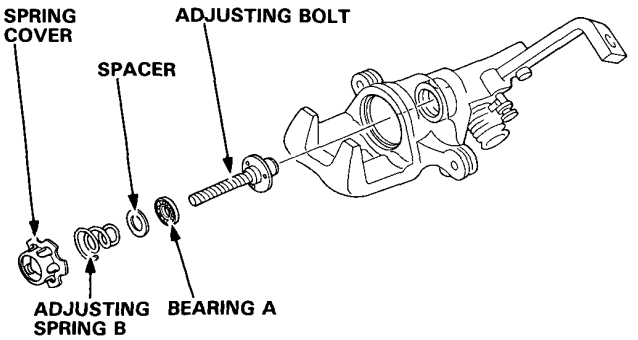

13. Remove the sleeve piston, and remove the pin from the cam.

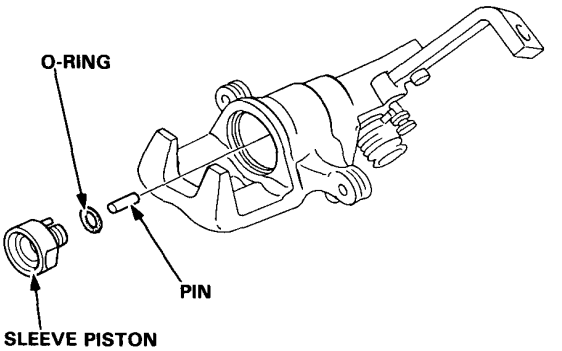

14. Remove the return spring, parking nut, lock washer, lever, cam and cam boot.

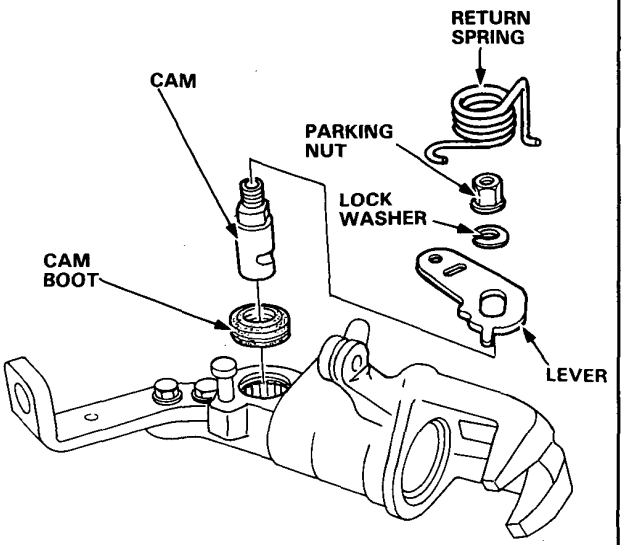

Reassembly

CAUTION:
- **Make sure all parts are clean before ressembly.**
- **Use only new replacement parts.**
- **Use only new clean brake fluid.**
- **Do not allow dirt or other foreign matter to contaminate the brake fluid.**
- **Do not mix different brands of brake fluid.**
- **Avoid spilling brake fluid on painted, plastic or rubber surfaces as its can damage the finish. Wash spilled brake fluid off immediately with clean water.**

1. Pack all cavities of the needle bearing with Brake Cylinder Grease (P/N: 08733—BO2OE), or equivalent rubber grease.

2. Coat the new cam boot with Brake Cylinder Grease (P/N: 08733—BO2OE), or equivalent rubber grease and install in the caliper.

3. Install the cam with threaded end facing up.

   CAUTION: Avoid damaging the cam boot since it must be installed before the cam.

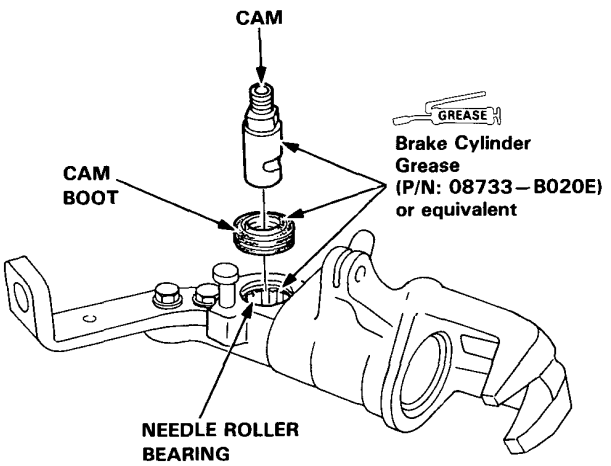

4. Install the lever, lock washer and parking nut, then tighten the parking nut.

5. Install the return spring.

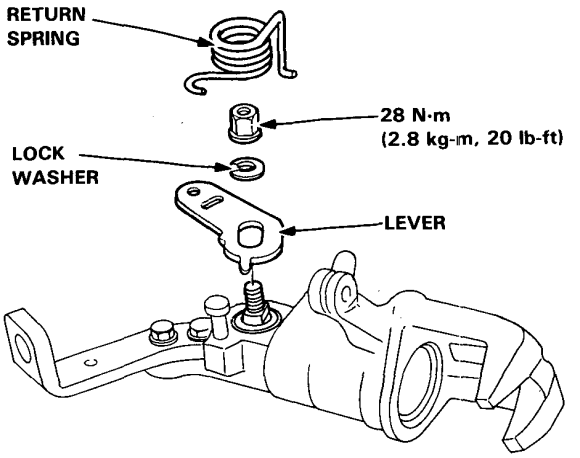

6. Install the pin in the cam.

7. Install a new O-ring on the sleeve piston.

8. Install the sleeve piston so the hole in the bottom of the piston is aligned with the pin in the cam, and two pins on the piston are aligned with the holes in the caliper.

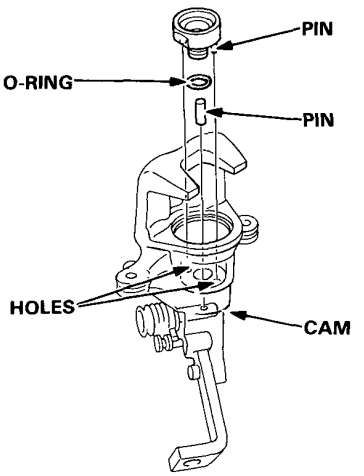

9. Install a new cup with its groove facing the bearing A side on the adjusting bolt.

10. Fit the bearing A, spacer, adjusting spring B and spring cover on the adjusting bolt, and install in the caliper cylinder.

11. Adjust the brake spring compressor (special tool) as shown.

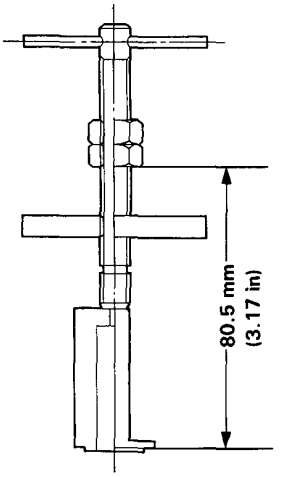

12. Install the brake spring compressor (special tool) as shown.

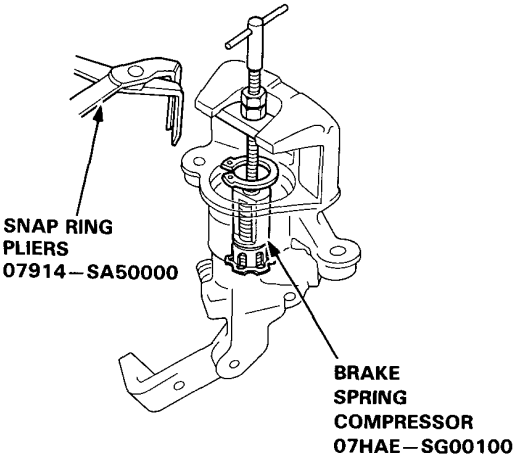

13. Compress the spring until it bottoms out.

14. Check that the flared end of the spring cover is below the circlip groove.

15. Install the circlip then remove the brake spring compressor.

NOTE: Check that the circlip is seated in the groove properly.

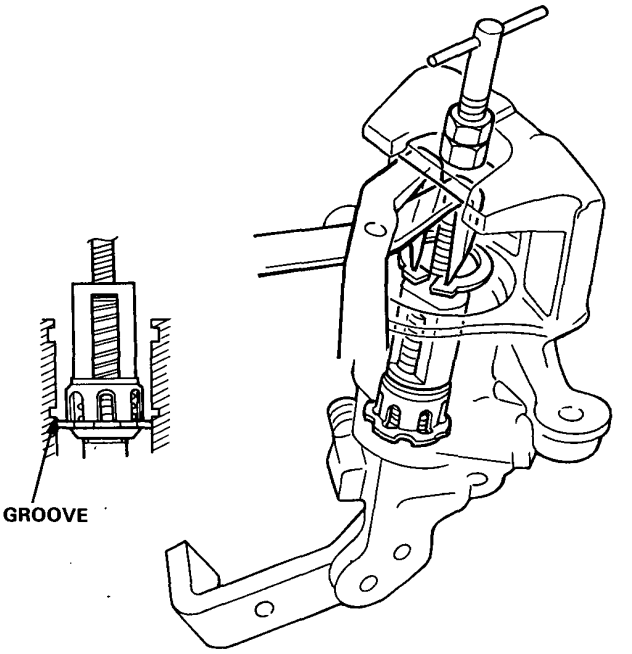

(cont'd)

Reassembly (cont'd)

16. Install the adjusting nut, adjusting spring A, and washer, and secure with the circlip.

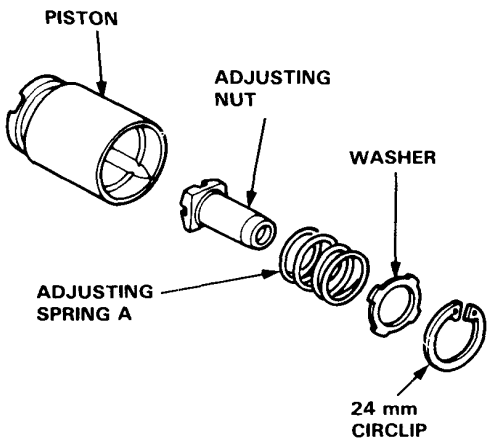

17. Coat the new piston seal and piston boot with silicone grease and install them in the caliper.

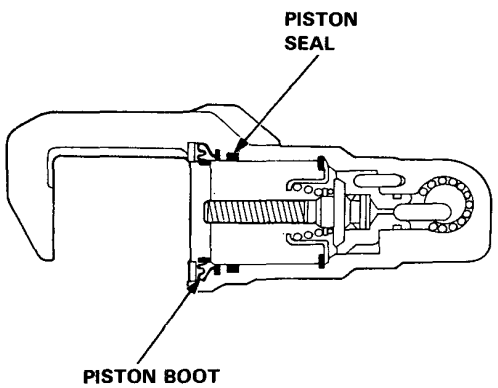

18. Coat the outside of the piston with silicone grease, and install it on the adjusting bolt while rotating it clockwise.

CAUTION: Avoid damaging the piston boot.

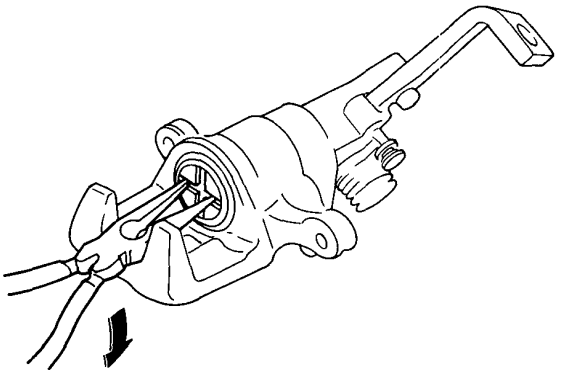

19. Install the brake pad retainers and brake pads.

20. Install the pad springs on the caliper.

21. Install the caliper on the caliper bracket and tighten the caliper mounting bolts.

22. Connect the brake hose to the caliper with new sealing washers and tighten the banjo bolt.

23. Connect the parking brake cable to the arm on the caliper.

24. Fill the brake reservoir up and bleed the brake system (page 19-9).

25. Operate the brake pedal several times, then adjust the parking brake lever.

    NOTE: Before adjustments, make sure the parking brake arm on the caliper touches the pin.

26. Install the caliper shield and tighten the bolts.

CAUTION:

- **Use only clean brake fluid.**
- **Make sure no dirt or other foreign matter is allowed to contaminate the brake fluid.**
- **Do not mix different brands of brake fluid as they may not be compatible.**
- ***Do not spill brake fluid on the car, it may damage* the paint; if brake fluid does contact the paint, wash it off immediately with water.**

NOTE: The reservoir on the master cylinder must be full at the start of bleeding procedure, and checked after bleeding each wheel cylinder. Add fluid as required. Use only DOT 3 or 4 brake fluid.

BLEEDING SEQUENCE

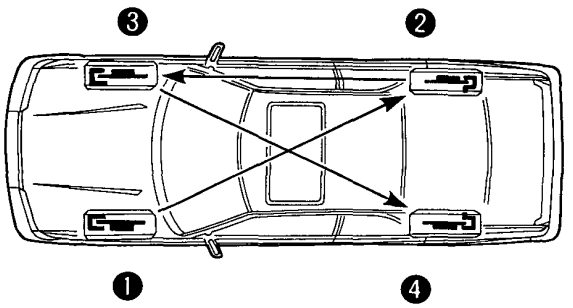

1. Have someone slowly pump the brake pedal several times, then apply steady pressure.

2. Loosen the brake bleed screw to allow air to escape from the system. Then tighten the bleed screw securely.

3. Repeat the procedure for each wheel in the sequence shown above, until air bubbles no longer appear in the fluid.

FRONT

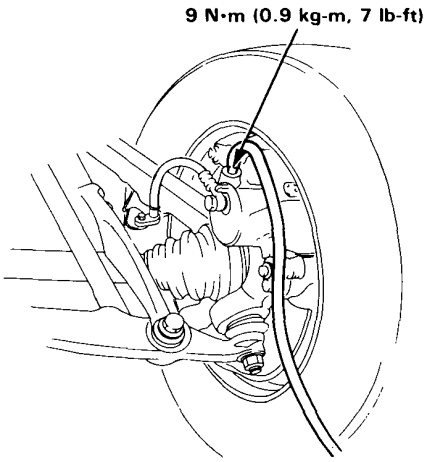

REAR

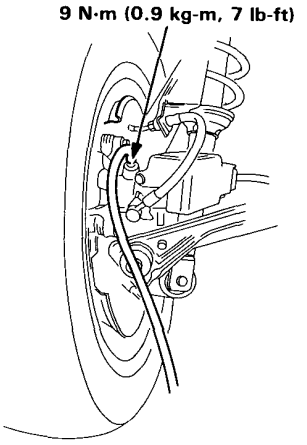

Parking Brake

Disassembly and Reassembly

PARKING BRAKE LEVER
Check for smooth operation.

8 x 1.25 mm
22 N·m (2.2 kg-m, 16 lb-ft)

SWITCH

8 x 1.25 mm
22 N·m (2.2 kg-m, 16 lb-ft)

ADJUSTING NUT

8 x 1.25 mm
22 N·m (2.2 kg-m, 16 lb-ft)

GREASE

(Sliding surface

GREASE

GREASE

8 x 1.25 mm
22 N·m
(2.2 kg-m, 16 lb-ft)

Check for faulty movement.

LOCK PIN
Replace.

8 x 1.25 mm
22 N·m (2.2 kg-m, 16 lb-ft)

EQUALIZER

Check for faulty movement.

LOCK PIN
Replace.

GREASE

NOTE: To disconnect the parking brake:
1. Pull out lock pin.
2. Remove clevis pin.
3. Remove clip.

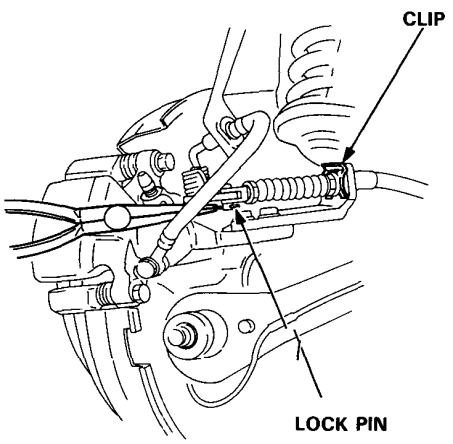

Wiring/Connector Location

NOTE: LH Drive shawn, RH Drive is similar

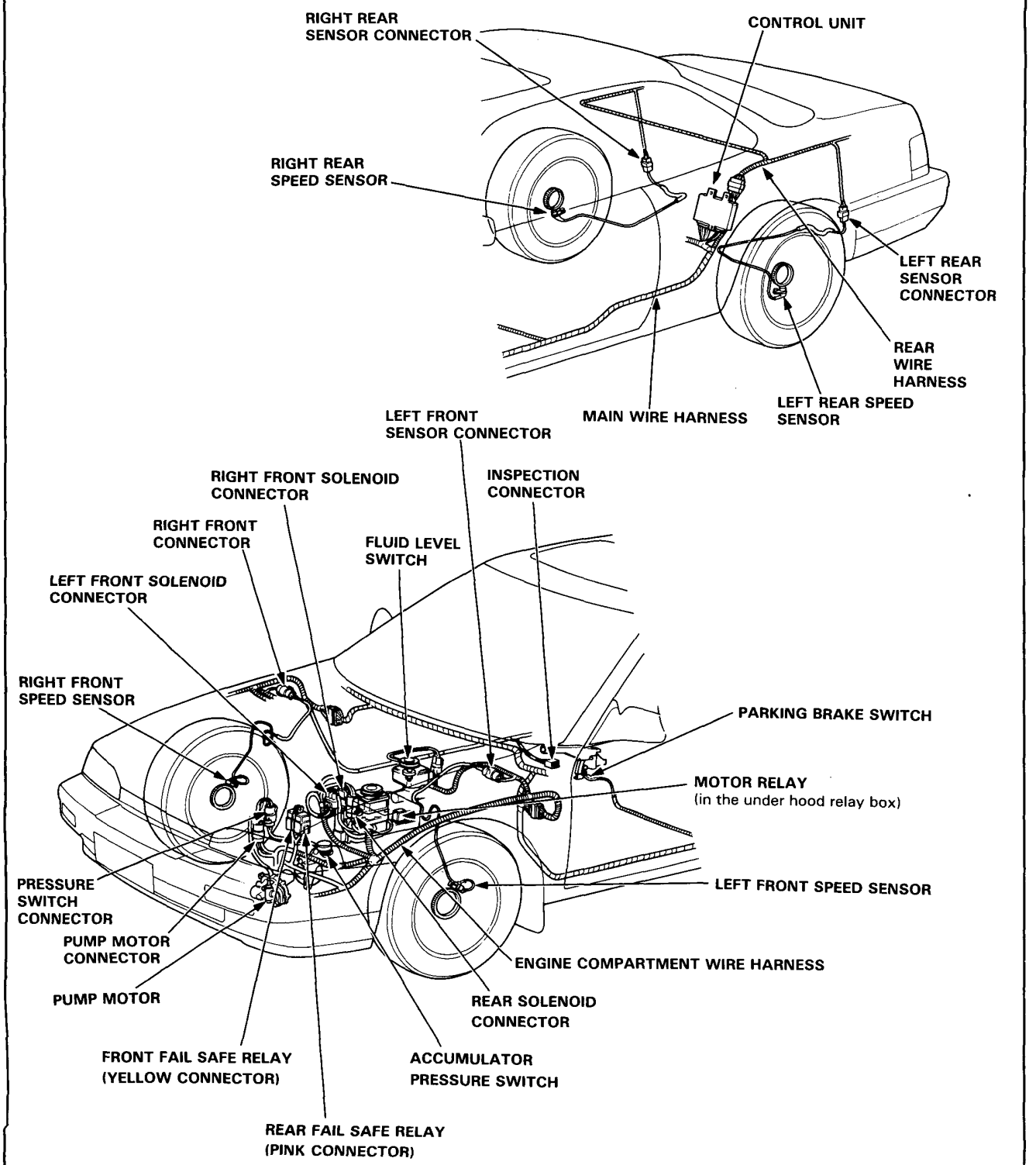

ALB System

Circuit Diagram

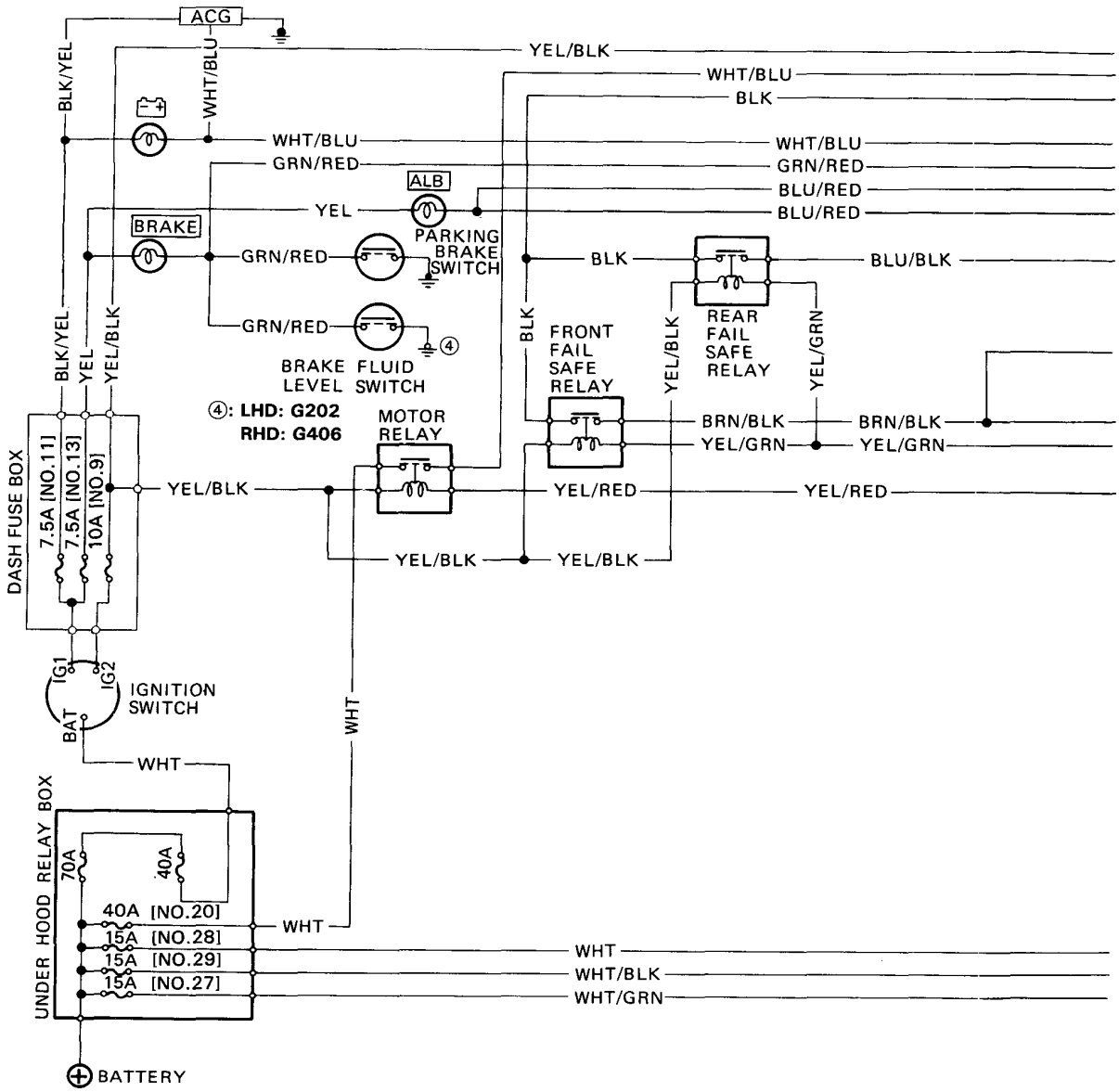

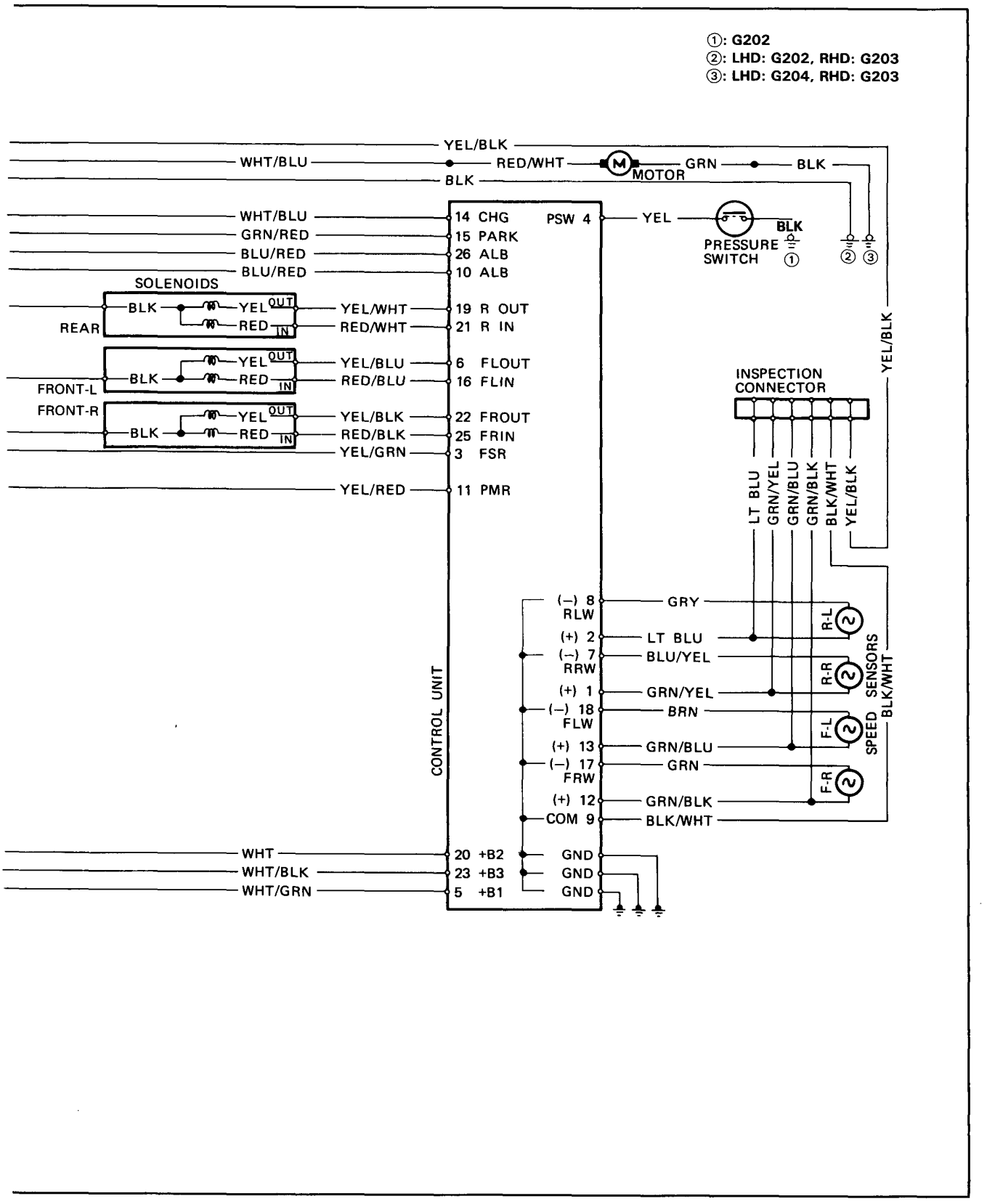
①: G202
②: LHD: G202, RHD: G203
③: LHD: G204, RHD: G203
YEL/BLK
WHT/BLU
RED/WHT
MOTOR
GRN
BLK
BLK
WHT/BLU
14 CHG
PSW 4
YEL
BLK
PRESSURE SWITCH
GRN/RED
15 PARK
BLU/RED
26 ALB
BLU/RED
10 ALB
SOLENOIDS
REAR
BLK
YEL OUT
RED IN
YEL/WHT
RED/WHT
19 R OUT
21 R IN
FRONT-L
BLK
YEL OUT
RED IN
YEL/BLU
RED/BLU
6 FLOUT
16 FLIN
FRONT-R
BLK
YEL OUT
RED IN
YEL/BLK
RED/BLK
22 FROUT
25 FRIN
YEL/GRN
3 FSR
YEL/RED
11 PMR
YEL/BLK
INSPECTION CONNECTOR
LT BLU
GRN/YEL
GRN/BLU
GRN/BLK
BLK/WHT
YEL/BLK
(–) 8 RLW
GRY
(+) 2
LT BLU
(–) 7 RRW
BLU/YEL
(+) 1
GRN/YEL
(–) 18 FLW
BRN
(+) 13
GRN/BLU
(–) 17 FRW
GRN
(+) 12
GRN/BLK
COM 9
BLK/WHT
R-L
R-R
F-L
F-R
SPEED SENSORS
BLK/WHT
CONTROL UNIT
WHT
20 +B2
GND
WHT/BLK
23 +B3
GND
WHT/GRN
5 +B1
GND

Function Test

NOTE:
- The ALB checker is designed to confirm proper operation of the ALB system by simulating each system function and operating condition. Before using the checker, confirm that the dash [ALB] warning light is not indicating some other problem with the system. The light should go on when the ignition is first turned on and then go off and stay off two seconds after the engine is started.
- The checker should be used through all modes, 1 to 6, to confirm proper operation of the system, in any one of the following situations:

— After replacing any ALB system component.
— After replacing or bleeding the system fluid.
— After any body or suspension repair that may have affected the sensors or their wiring.
— As part of P.D.I.

WARNING Disconnect the ALB checker before driving the car. A collision can result from a reduction, or complete loss, of braking ability causing severe personal injury or death.

1. With the ignition switch off, disconnect the 6-P inspection connector from the connector cover under the possenser seat and connect the 6-P inspection connector to the ALB checker and adaptor.

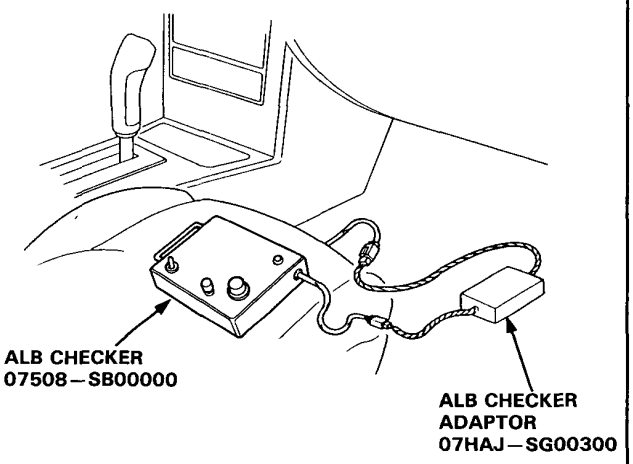

NOTE: Place the vehicle on level ground with the wheels blocked, put the transmission in neutral for manual transmission models, and in P for Automatic transmission models.

2. Start the engine and release the parking brake,

3. Operate the ALB checker as follows,
   (1) Turn the Power Switch ON.
   (2) Turn the Mode Selector switch to "1."
   (3) Push the Start Test switch:
   — The Busy light should come ON.
   — The dash [ALB] warning light should not come ON (If it comes on, follow the troubleshooting on page 13-46)

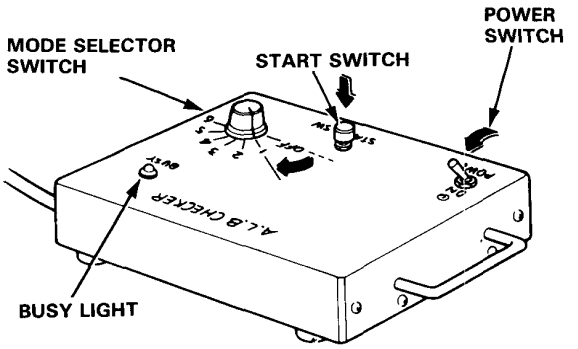

4. Turn the Mode Selector Switch futher to "2".

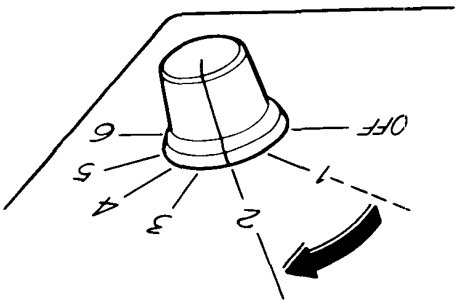

5. Depress the brake pedal and push the Start Test switch.
   The dash ALB warning light should not go on while the Busy light is ON. There should be kickback on the brake pedal. If not as described, go to troubleshooting, page 13-34.

   NOTE: The operation sequence simulated by Modes 2, 3, 4, 5 and 6:

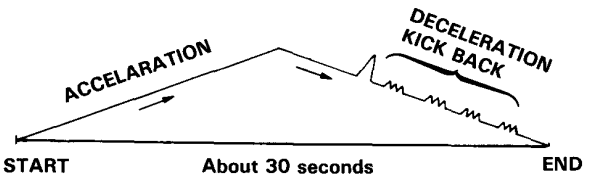

6. Turn the Mode Selector switch to 3, 4, 5 and 6. Perform step 5 for each of the test mode positions.

Mode 1:
Sends the simulated driving signal 0 km/h (0 mph) → 180 km/h (112.5 mph) → 0 km/h (0 mph) of each wheel to the control unit to check the control unit self diagnosis circuit. There should be NO kickback.

Mode 2:
Sends the driving signal of each wheel, then sends the lock signal of the rear left wheel to the control unit. There should be kickback.

Mode 3:
Sends the driving signal of each wheel, then sends the lock signal of the rear right wheel to the control unit. There should be kickback.

Mode 4:
Sends the driving signal of each wheel, then sends the lock signal of the front left wheel to the control unit. There should be kickback.

Mode 5:
Sends the driving signal of each wheel, then sends the lock signal of the front right wheel to the control unit. There should be kickback.

Mode 6:
Sends the driving signal of each wheel, then sends the lock signal of both front wheels to the control unit. There should be strong kickback.

NOTE: If little or no kickback is felt from the brake pedal in modes 2-6, repeat the function test of modes 1-6 several times before beginning to troubleshoot other parts of the system.

Inspection points:

1. The ALB warning light goes ON in mode 1.
   - Check the wiring. If there is good condition, the control unit is faulty.
     If ALB warning light goes on 120 seconds later but the power unit stops, refer to page 13-38.

2. There are no kickback in modes 2 through 6.
   - Faulty pressure switch (remains ON)
   - Shorted wires
   - Faulty or disconnected power unit coupler
   - Faulty power unit relay

3. Weak kickback in modes 2 through 6.
   - Bleed high pressure circuits.

4. Power unit stops in mode 1 but it does not stop and there are no kickback in modes 2 through 6.
   - Brake fluid leakage
   - Bleed power unit
   - Clogged power unit outlet
   - Clogged or deteriorated power unit hose

ALB Warning Light

Temporary Driving Conditions:

1. The ALB warning light will come on and the control unit memorizes the problem under certain conditions.

   NOTE: Problem codes explained on pages 13-36 and 13-37.

   - The tire(s) adhesion is lost due to excessive cornering speed.
     Problem codes: 4-4, 4-8, 4-12.
   - The vehicle loses traction when starting from a stuck condition on a muddy, snowy, or sandy road.
     Problem code: 5.
   - When the parking brake is applied for more than 30 seconds while the vehicle is being driven.
     Problem code: 2.
   - The vehicle is driven on extremely rough road.

   The ALB system is OK, if the ALB warning light goes off after the engine is restarted.

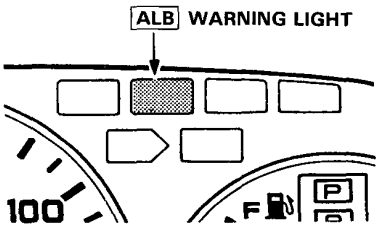

2. If you receive a customer's report that the ALB warning light sometimes comes on, check the System using the ALB checker to confirm whether there is any trouble in the system.
   See page 13-32.

3. The ALB warning light will come on and the LED (see page 13-35) will display a problem code when there is insufficient battery voltage to the control unit. An example would be when the battery is so weak that the car must be Jump-started.
   After the battery is sufficiently recharged, the ALB warning light will work normally after the engine is stopped and restarted.

   However, after recharging the battery, the LED problem code must be cleared from the control unit's memory by disconnecting the No. 28 fuse for at least 3 seconds.

Warning Light Circuit:

1. The ALB warning light does not go on when the ignition switch is turned on.
   Check the following items. If they are OK, check the control unit connectors.
   If not loose or disconnected, install a known-good control unit and recheck:

   - Blown warning bulb.
   - Open circuit in YEL lead between No.13 fuse and combination meter.
   - Open circuit BLU/RED lead between combination meter and control unit.
   - Loose component grounding of the control unit to the body.

2. The ALB warning light remains ON or after the engine is started, however the LED on the control unit does not blink any code or sub-code, check for the following:

   - Loose or poor connection of the wire harness at the control unit.
   - Faulty No. 28 fuse.
   - Open circuit in WHT lead between No. 28 fuse and control unit.
   - Open circuit in YEL/BLK lead between fuse No.9 and fail safe relay(s).
   - Open or short circuit in the YEL/GRN lead between fail safe relay(s).
   - Short circuit in BLU/RED lead between combination meter and control unit.
   - Open circuit in WHT/BLU lead between alternator and control unit.

   If the problem is not found substitute a known-good control unit and recheck whether the warning light remains ON.

Comes on and remains on while running:

1. Stop the engine.
2. Turn the ignition switch on and make sure that the ALB warning light comes on.
3. Restart the engine and check the ALB warning light.
   - There is no problem in the ALB system, if the ALB warning light goes off.
   - Go to step 4, if the ALB warning light remains on.
4. Stop the engine.
5. Remove the inspection hole lid on the right of the front console.
6. Turn the ignition switch on, but do not start the engine.
7. Record the blinking frequency of the LED on the control unit. The blinking frequency indicates the problem code.

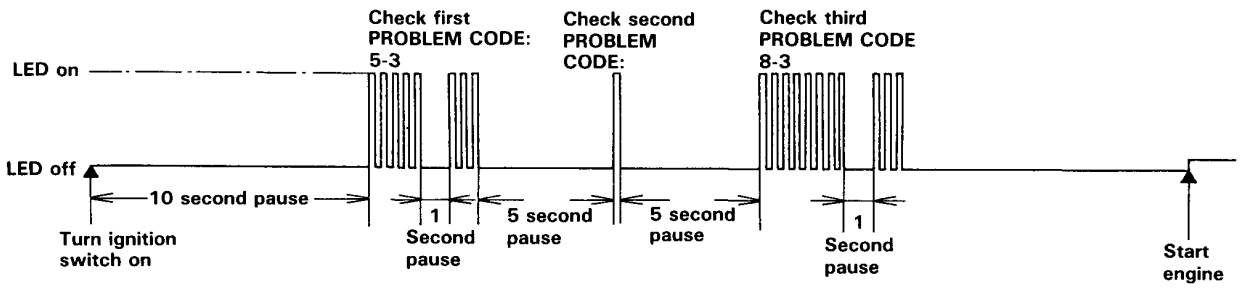

NOTE:
- The control unit can indicate three problem codes (one, two or three problems).
- If the LED does not light, see Troubleshooting of Warning Light Circuit page 13-34, except alternator signal (WHT/BLU).
- If you miscount the blinking frequency, turn the ignition switch off, then turn on to blink the LED again.
- The LED lights faintly after starting the engine as the control unit uses the LED circuit to intercommunicate between its internal computers.
- After the repair is completed, disconnect the No. 28 fuse for at least 3 seconds to erase the control unit's memory. Then turn the ignition key on again and recheck.
- The memory is erased if the connector is disconnected from the control unit or the control unit is removed from the body.

Symptom-to-System Chart

PROBLEM CODE		PROBLEMATIC COMPONENT/ SYSTEM	AFFECTED				See page	OTHER COMPONENT	See page
MAIN CODE	SUB CODE		FRONT RIGHT	FRONT LEFT	REAR RIGHT	REAR LEFT			
1	—	Hydraulic Controlled Component	—	—	—	—	13-38	-No.20 fuse -Motor relay -Pressure Switch -Accumulator -Modulator	13-67
2	—	Parking brake switch-related problem	—	—	—	—	13-41	Brake fluid level switch BRAKE light	
3	1	Front fail safe relay	—	—	—	—	13-67 (Function Test)		
	2	Rear fail safe relay	—	—	—	—			
3	13	Pulser (s)	○				——		
	14			○					
	15				○	○			
4	4	Speed sensor(s)			○		13-42	Modulator	
	8					○			
	12				○	○			
5 or 6 or 7	1	Speed sensor	○				13-43		
	2			○					
	4				○				
	8					○			
8	1	Front solenoid related problem (Open)	IN				13-44		
	2		OUT					Front R speed sensor	13-43
	3		BOTH						
	4			IN					
	8			OUT				Front L speed sensor	13-43
	12			BOTH					
	15	Front fail safe relay	BOTH	BOTH			13-45	Solenoids misconnected	

PROBLEM CODE		PROBLEMATIC COMPONENT/ SYSTEM	AFFECTED			See page	OTHER COMPONENT	See page
MAIN CODE	SUB CODE		FRONT RIGHT	FRONT LEFT	REAR			
9	—	Solenoid related problem (Open)			IN	13-47		
10	—				OUT		Rear speed sensors	13-43
11	—				BOTH	13-48	Rear fail safe relay	13-67
11	3		BOTH		BOTH	—		
	12			BOTH	BOTH			
	15		BOTH	BOTH	BOTH		Front or rear fail safe relay	
12	1	Solenoid related problem (Short) Power supply problem	IN			13-50		
	2		OUT					
	3		BOTH			13-51	No.29 fuse	
	4			IN		13-50		
	8			OUT				
	12			BOTH		13-52	No.27 fuse	
	15		BOTH	BOTH		—	No.29 and/or No.27 fuse(s)	
13	—	Solenoid related problem (Short) Power supply problem			IN	13-53		
14	—				OUT			
15	—				BOTH			
15	3		BOTH		BOTH		No.29 fuse	
	12			BOTH	BOTH		No.27 fuse	
LED stays ON:			BOTH	BOTH	BOTH		No.29 and/or No.27 fuse(s)	

NOTE: The control unit can display a number of sub-codes other than those listed. Such sub-codes indicate unlikely combinations of multiple component failures, or more likely, a problem in a wire or connector common to a group of components. To troubleshoot, refer to the procedures for other sub-codes with the same main code.

Flow Chart

Problem Code 1: Hydraulic Controlled Components.

NOTE: The LED does not blink when the following failures occur.
- The contact points of the motor relay remain closed (The motor runs continuously even after the ignition key is removed).
- YEL/RED lead is shorted or the control unit is internally shorted (The motor stops when the ignition switch is turned off).

Pre test steps:
- Check No. 40 Fuse.
- Check all brake system hoses and pipes (low and high pressure) for signs of leaking, bending or kinking.
- Check reservoir fluid level, and if necessary, fill to the MAX level.

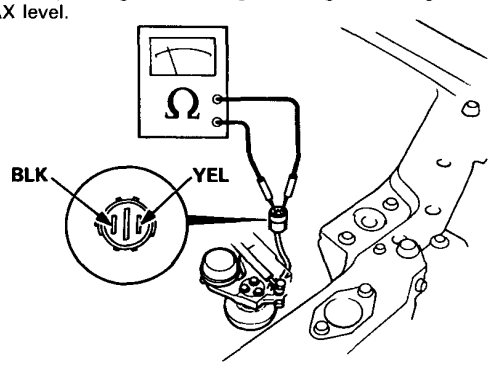

Disconnect the pressure switch connector and check the continuity between BLK and YEL terminals.

Is there continuity?

YES → Bleed high pressure fluid from the maintenance bleeder with the ALB T-wrench. See page 13-54.

Check the continuity of pressure switch between BLK and YEL terminals.

Is there continuity?

YES → Replace the pressure switch (closed).

NO

NO → Reconnect the pressure switch connector.

Bleed high pressure fluid from the maintenance bleeder with the ALB T-wrench (see page 13-54).
Jack up the front of car and support with safety stands, then run the engine in gear above 10 km/h (6 mph).

WARNING Block rear wheels before jacking up front of car.

(To page 13-39).

(From page 13-38)

Does the pump motor run?
- YES → (To page 13-40)
- NO ↓

Disconnect the 21P connector from the control unit.

Check for continuity between the YEL terminal and body around.

Is there continuity?
- YES → Repair short in YEL wire between the control unit and pressure switch.
- NO ↓

Connect the YEL/RED terminal to body ground using a jumper wire. Turn the ignition switch ON.

Does the pump motor run?
- YES → Faulty the control unit.
- NO ↓

Remove the pump motor relay and check the pump motor relay (page 13-66).

Does it work properly?
- NO → Faulty the pump motor relay.
- YES ↓

Connect the WHT/BLU and WHT terminals using a jumper wire.

Does the pump motor run?
- NO → (To page 13-41)
- YES ↓

Check voltage between the YEL/BLK (+) and body ground (–).

Is there battery voltage?
- NO → Repair open in YEL/BLK wire between the No. 9 fuse and pump motor relay.
- YES ↓

Repair open in YEL/RED wire between the control unit and pump motor relay.

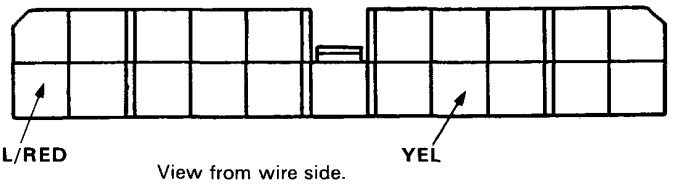

View from wire side.

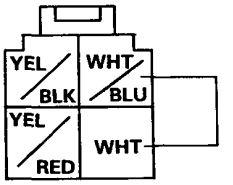

View from terminal side.

CAUTION: If the motor runs disconnect the jumper wire immediately.

(cont'd)

Flow Chart (cont'd)

(From page 13-39)

Does the pump motor run with an increasingly loud, raspy sound?

- NO → Pump runs with a constant soft sound: Bleed air from ALB system using the procedure on page 13-54 and check the pump sound again.
- YES ↓

Does the pump motor stop after about 60 seconds?

- NO → Pump stops about 120 seconds: faulty pressure switch (open).
- YES ↓

Does the reservoir fluid level go down, and are there no bubbles in the modulator reservoir tank?

- NO →
  - If level stays the same and there are bubbles in the modulator reservoir tank, check the accumulator fluid quantity by bleeding the high pressure line with the ALB T-wrench:
    - If over 120 cc, faulty accumulator.
    - If under 70 cc, modulator inlet solenoid leak or accumulator leak.
  - If level goes up: faulty modulator assembly.
- YES ↓

System is OK; recheck pump motor, to confirm no intermittent problem.

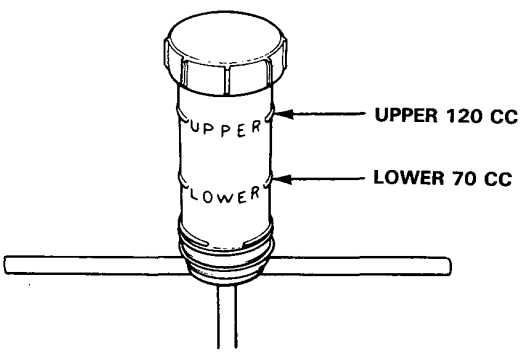

NOTE: The fluid enters the reservoir under pressure; wait 1 or 2 minutes for air bubbles to disappear and level to stabilize.

(From page 13-39)

Measure voltage between the WHT terminal (+) and body ground (–).

Is there battery voltage?

NO — Repair open in WHT wire between the fuse and pump motor relay.

YES

Measure voltage between the WHT/BLU terminal (+) of the pump motor and body ground (–).

Is there battery voltage?

NO — Repair open in WHT/BLU wire between motor relay and pump motor, or open in BLK wire between pump motor and ground or poor ground (LHD: G204, RHD: G203).

YES

Replace the pump motor.

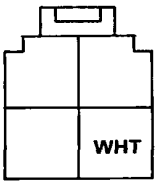

View from terminal side.

View from terminal side.

Problem code2: Parking Brake Switch Related Problem

If the parking brake has been released, the following items are possible causes. If they are OK, check the control unit connectors for good connection. If not loose or disconnected, substitute a known-good control unit and recheck.

NOTE: Before Troubleshooting Problem Code 2, remove the No. 28 fuse for three seconds to clear the control unit's memory, then test drive the car.
If the [ALB] warning light and LED stay off, the probability is that the car was driving with the parking brake applied.

- The parking brake is applied for more than 30 seconds while driving.
- The brake fluid level in the master cylinder is too low.
- GRN/RED lead is shorted between the [BRAKE] warning light and parking brake switch.
- GRN/RED lead is shorted between the [BRAKE] warning light and brake fluid level switch.
- The [BRAKE] warning light is blown.
- GRN/RED has an open between the [BRAKE] warning light and parking brake.
- GRN/RED has an open between the parking brake switch and control unit.

(cont'd)

Flow Chart (cont'd)

Problem code 4-4 to 4-12: Rear Speed Sensor

Disconnect wire harness from speed sensor.

Check for resistance between sensor terminals.

Is there 500 — 1,000 Ω?

NO — Faulty the speed sensor.

YES

Disconnect the 21P connector from the control unit.

Check the sensor wire for continuity between the control unit and each speed sensor:
BLU/YEL: Rear Right Negative
GRY: Rear Left Negative
GRN/YEL: Rear Right Positive
LT BLU: Rear Left Positive

Is there continuity?

NO — Repair open in the sensor wire:
BLU/YEL: Rear Right Negative
GRY: Rear Left Negative
GRN/YEL: Rear Right Positive
LT BLU: Rear Left Positive

YES

Reconnect the 21P connector to the control unit and 2P connectors to the speed sensors.

Connect ALB checker to inspection connector.

Check ALB function in MODE 2 and 3.

Does it work properly?

NO — Faulty the modulator.

YES

Faulty the control unit.

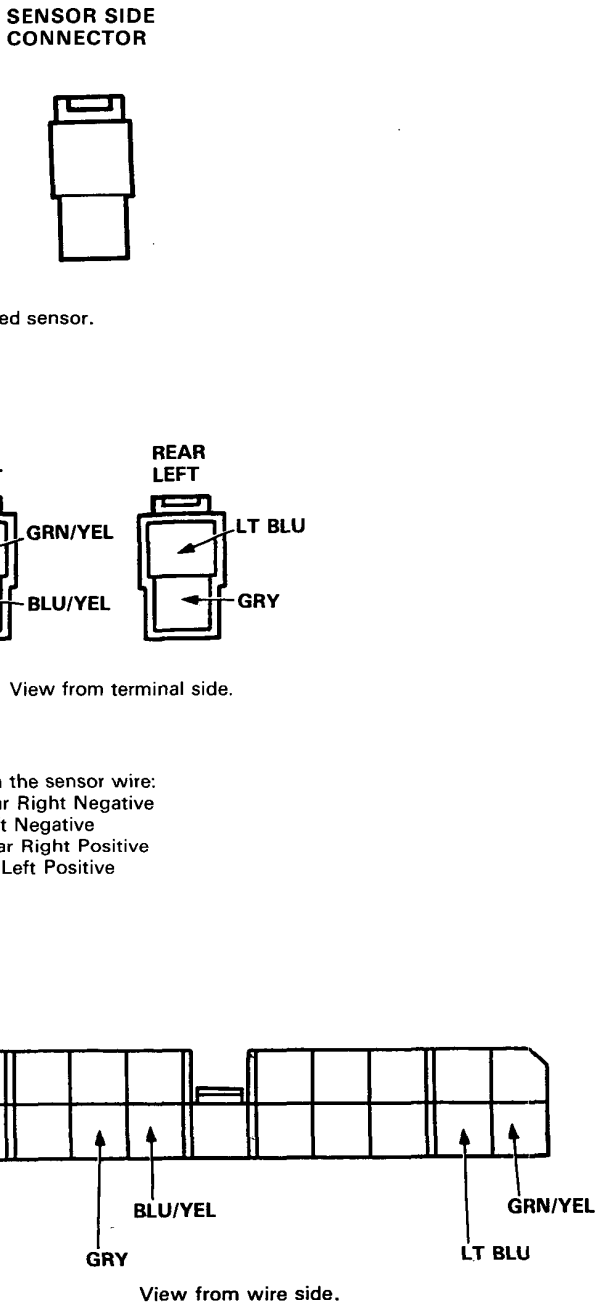

Problem Code 5-1 to 7-8: Speed Sensor

Disconnect wire harness from speed sensor.

Check for resistance between sensor terminals.

Is there 500—1000 Ω? — NO → Faulty the speed sensor.

YES

Disconnect the 21P connector from the control unit.

Check the each wires for continuity between the sensor and control unit:
GRN/BLK: Front Right Positive
GRN/BLU: Front Left Positive
GRN/YEL: Rear Right Positive
LT BLU: Rear Left Positive
GRN: Front Right Negative
BRN: Front Left Negative
BLU/YEL: Rear Right Negative
GRY: Rear Left Negative

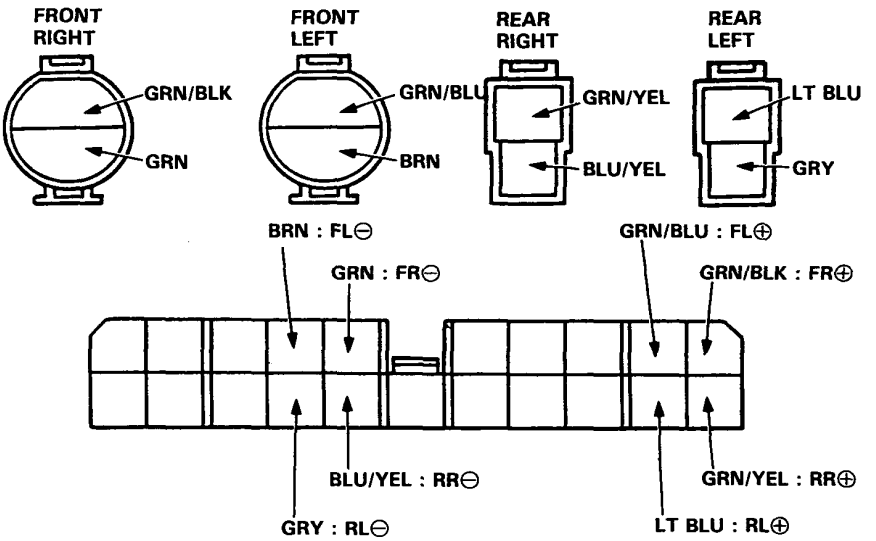

View from wire side.

Is there continuity? — NO → Repair open in sensor wire:
GRN/BLK: Front Right Positive
GRN/BLU: Front Left Positive
GRN/YEL: Rear Right Positive
LT BLU: Rear Left Positive
GRN: Front Right Negative
BRN: Front Left Negative
BLU/YEL: Rear Right Negative
GRY: Rear Left Negative

YES

Check pulser air gap (page 13-68).

Is the air gap OK? — NO → Repair air gap or replace the pulser rotor and/or speed sensor

YES

Faulty the control unit.

(cont'd)

Flow Chart (cont'd)

Problem Code 8-1 to 8-12: Front Solenoid Related Problem

NOTE: Problem Code 8-2 or 8-8, also perform troubleshooting of Problem Code 5-1 to 7-8 (page 13-43).

Disconnect wire harness from front solenoids.

Check for resistance between RED and BLK terminals of front solenoid.

Is there 1-3 Ω?
- NO — Faulty solenoid.
- YES

Check for resistance between YEL and BLK terminals of front solenoid.

Is there 1-3 Ω?
- NO — Faulty solenoid.
- YES

Disconnect the 21P and 5P connectors from the control unit.

Check for continuity between control unit and front solenoid:
RED/BLK: Front Right Inlet
YEL/BLK: Front Right Outlet
RED/BLU: Front Left Inlet
YEL/BLU: Front Left Outlet.

Is there continuity?
- NO — Repair open in wire:
  RED/BLK: Front Right Inlet
  YEL/BLK: Front Right Outlet
  RED/BLU: Front Left Inlet
  YEL/BLU: Front Left Outlet
- YES — Faulty the control unit.

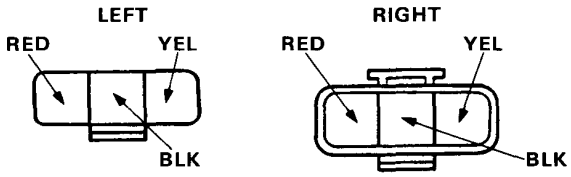

View from terminal side.

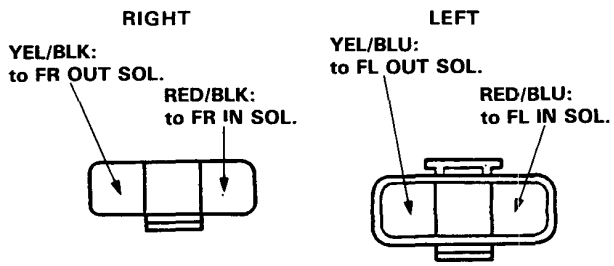

View from terminal side.

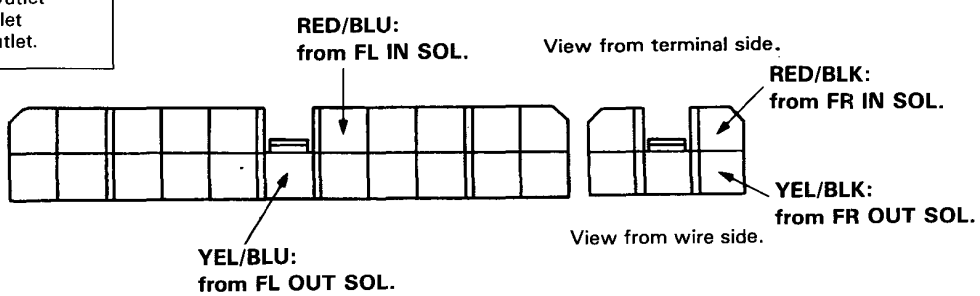

View from wire side.

View from wire side.

Problem 8-15: Front Fail Safe Relay Circuit

Remove front fail safe relay.

Check relay function (page 13-66).

Does it work properly?
- NO → Faulty the front fail safe relay.
- YES ↓

Check for continuity between BLK lead and body ground.

Is there continuity?
- NO → Repair open in BLK wire between the fail safe relay and ground or poor ground (LHD: G202, RHD: G203).
- YES ↓

Turn ignition switch ON.

Check for voltage between YEL/BLK lead (+) and body ground (–).

Is battery voltage available?
- NO → Repair open in YEL/BLK wire between the fail safe relay and No. 9 fuse.
- YES ↓

Turn ignition switch OFF.

Disconnect the 3P connectors from the front solenoids.

Check for continuity in BRN/BLK lead between fail safe relay and solenoids.

Is there continuity?
- NO → Repair open in BRN/BLK wire between the solenoids and fail safe relay.
- YES ↓

(To page 13-46)

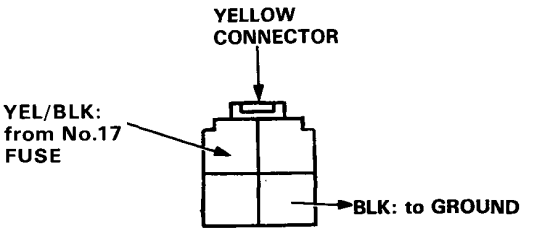

View from terminal side.

View from terminal side.

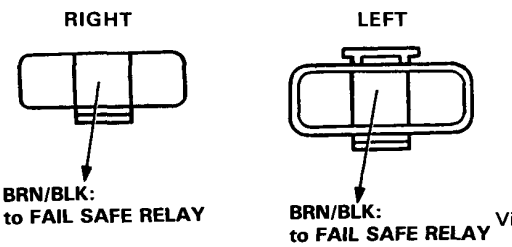

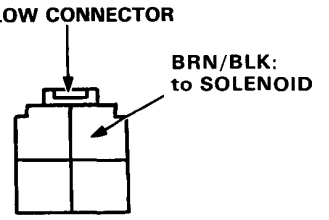

View from terminal side.

(cont'd)

Flow Chart (cont'd)

(From page 13-45)

Check for resistance between RED and BLK terminals of front solenoid.

Is there 1-3 Ω?
- NO — Faulty solenoid.
- YES

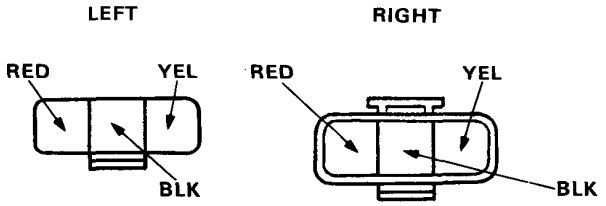

View from terminal side.

Check for resistance between YEL and BLK terminals of front solenoid.

Is there 1-3 Ω?
- NO — Faulty solenoid.
- YES

Disconnect the 21P and 5P connectors from the control unit.

Check for continuity between control unit and front solenoid:
RED/BLK: Front Right Inlet
YEL/BLK: Front Right Outlet
RED/BLU: Front Left Inlet
YEL/BLU: Front Left Outlet.

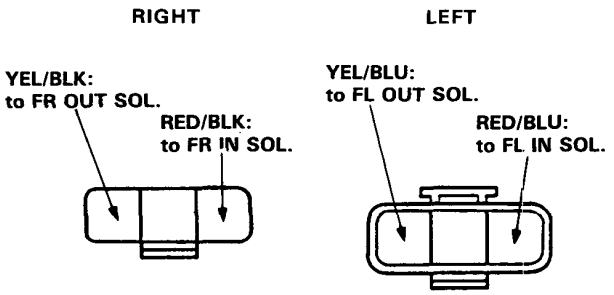

View from terminal side.

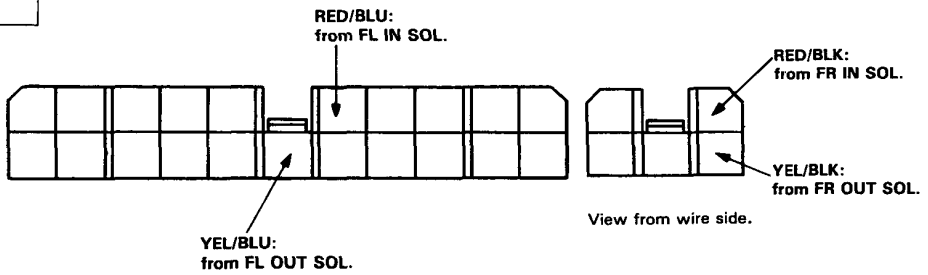

View from wire side.

View from wire side.

Is there continuity?
- NO — Repair open in wire:
  RED/BLK: Front Right Inlet
  YEL/BLK: Front Right Outlet
  RED/BLU: Front Left Inlet
  YEL/BLU: Front Left Outlet
- YES

Faulty the control unit.

Problem Code 9 or 10: Rear Solenoid Related Problem

NOTE: Problem Code 10, also perform troubleshooting of Problem Code 5-1 to 7-8 (page 13-43).

Disconnect wire harness from rear solenoid.

Check for resistance between RED and BLK terminals of rear solenoid.

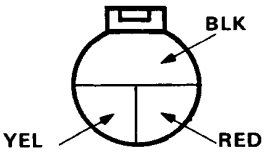

View from terminal side.

Is there 1-3 Ω?

NO — Faulty solenoid.

YES

Check for resistance between YEL and BLK terminals of rear solenoid.

Is there 1-3 Ω?

NO — Faulty solenoid.

YES

Disconnect the 21P connector from the control unit.

Check for continuity between control unit and rear solenoid:
RED/WHT: Rear Inlet
YEL/WHT: Rear Outlet

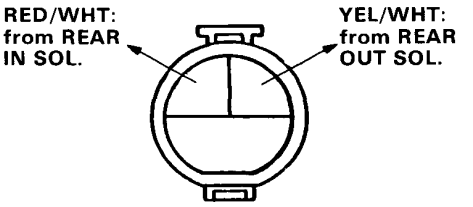

View from wire side.

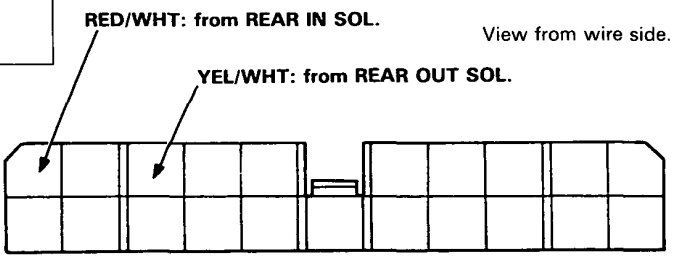

View from wire side.

Is there continuity?

NO — Repair open in the wire between the rear solenoid and control unit
RED/WHT: Rear Inlet
YEL/WHT: Rear Outlet

YES

Faulty the control unit.

(cont'd)

Flow Chart

Problem Code 11: Rear Fail Safe Relay Circuit

NOTE: Also perform Troubleshooting of Problem Code 9 or 10 (page 13-47).

Remove rear fail safe relay.

Check relay function (page 13-66).

Does it work properly? — NO → Faulty the relay.

YES

Check for continuity between BLK lead of wire harness and body ground.

Is there continuity? — NO → Repair open in BLK wire between the relay and ground or poor ground (LHD: G202, RHD: G203).

YES

Turn ignition switch ON.

Check for voltage between YEL/BLK lead (+) of wire harness and body ground (–).

Is battery voltage available? — NO → Repair open in YEL/BLK wire between the relay and No. 9 fuse.

YES

Turn ignition switch off.

Disconnect the 3P connector (PNK) from the rear solenoid.

Check for continuity in BLU/BLK lead between fail safe relay and solenoid.

Is there continuity? — NO → Repair open in BLU/BLK wire between the relay and solenoid.

YES

(To page 13-49)

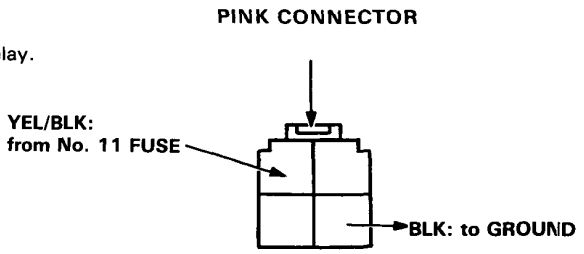

View from terminal side.

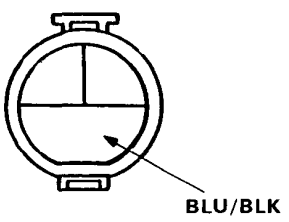

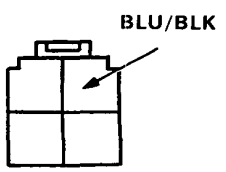

View from terminal side.

(From page 13-48)

Disconnect the 21P connector from the control unit.

Check for continuity in YEL/GRN lead between fail safe relay and control unit.

Is there continuity?

NO — Repair open in YEL/GRN wire between the relay and control unit.

YES

Check for continuity between control unit and rear solenoid.
RED/WHT: Rear Inlet
YEL/WHT: Rear Outlet

Is there continuity:

NO — Repair open in wire between the solenoid and control unit.
RED/WHT: Rear Inlet
YEL/WHT: Rear Outlet

YES

Faulty the control unit.

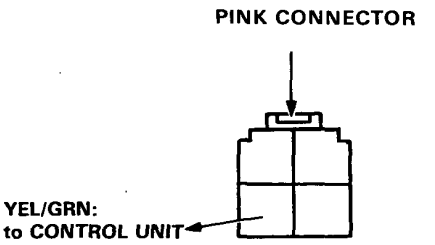

View from terminal side.

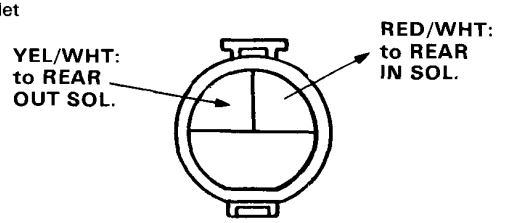

View from terminal side.

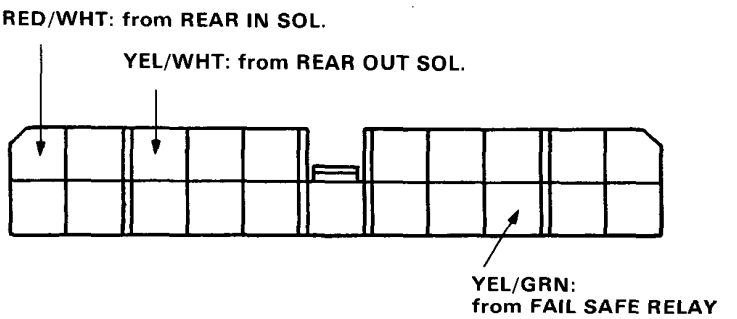

View from wire side.

(cont'd)

Flow Chart (cont'd)

Problem Code 12-1, 12-2, 12-4 or 12-8: Front Solenoid

Disconnect wire harness from front solenoids.

Check for resistance between RED and BLK terminals of front solenoid.

Is there 1-3 Ω? — NO → Faulty solenoid.

YES

Check for resistance between YEL and BLK terminals of front solenoid.

Is there 1-3 Ω? — NO → Faulty solenoid.

YES

Disconnect the 21P and 5P connectors from the control unit.

Check for continuity between wire harness and body ground.
RED/BLK: front Right Inlet
YEL/BLK: Front Right Outlet
RED/BLU: Front Left Inlet
YEL/BLU: Front Left Outlet

Is there continuity? — YES → Repair short in wire between control unit and front solenoids.
RED/BLK: Front Right Inlet
RED/BLU: Front Left Inlet
YEL/BLK: Front Right Outlet
YEL/BLU: Front Left Outlet

NO

Faulty the control unit.

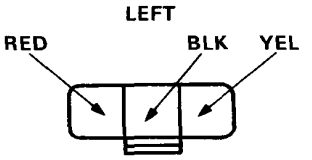

View from terminal side.

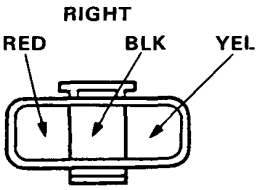

View from terminal side.

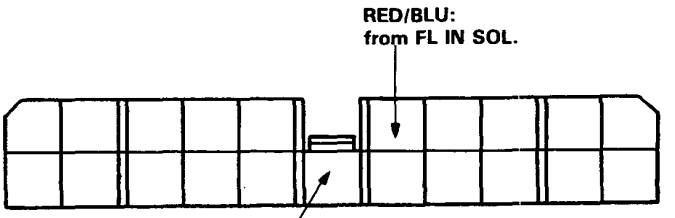

View from wire side.

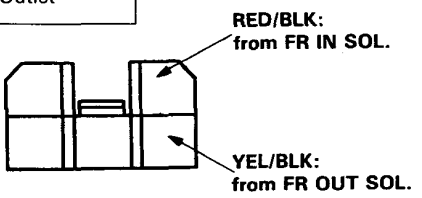

View from wire side.

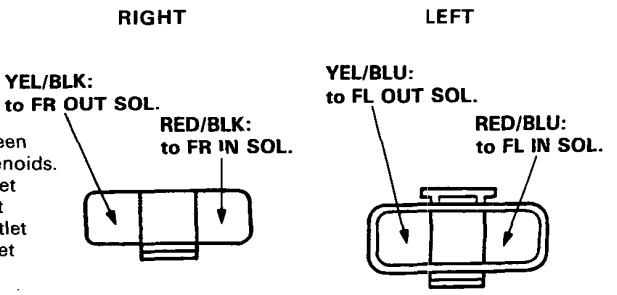

View from terminal side.

Problem Code 12-3: Front Right Solenoid and/or Power Supply

Check No. 29 fuse.

Is the fuse OK?
- NO → Replace the ALB 3 fuse.
- YES ↓

Disconnect wire harness from front solenoids.

Check for resistance between RED and BLK terminals of front solenoid.

Is there 1-3 Ω?
- NO → Faulty solenoid.
- YES ↓

Check for resistance between YEL and BLK terminals of front solenoid.

Disconnect the 5P connector from the control unit.

Check for voltage between WHT/BLK lead (+) and body ground (–).

Is battery voltage available?
- NO → Repair open in WHT/BLK wire between the No. 29 fuse and control unit.
- YES ↓

Check for continuity between wire harness and body ground.
RED/BLK: Front Right Inlet
YEL/BLK: Front Right Outlet

Is there continuity?
- YES → Repair short in wire
  RED/BLK: Front Right Inlet
  YEL/BLK: Front Right Outlet
- NO ↓

Faulty the control unit.

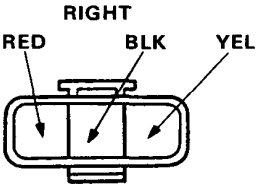

View from terminal side.

View from wire side.

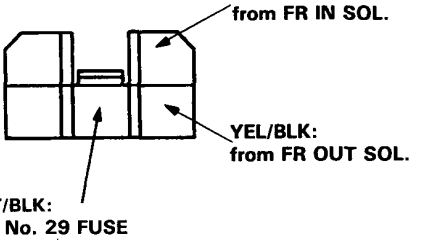

(cont'd)

Flow Chart

Problem Code 12-12: Front left Solenoid and/or Power Supply Problem

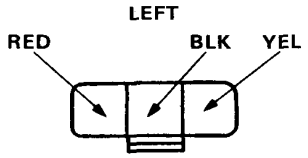

View from terminal side.

Check No. 27 fuse.

Is the fuse OK? — NO → Replace the fuse.

YES

Disconnect wire harness from front solenoid.

Check for resistance between RED and BLK terminals of front solenoid.

Is there 1—3 Ω? — NO → Faulty solenoid.

YES

Check for resistance between YEL and BLK terminals of front solenoid.

Is there 1—3 Ω? — NO → Faulty solenoid.

YES

Disconnect the 21P connector from the control unit.

Check for voltage between WHT/GRN lead (+) and body ground (–).

Is battery voltage available? — NO → Repair open in WHT/GRN wire between the No. 27 fuse and control unit.

YES

Check for continuity between wire harness and body ground.
RED/BLU: Front Left Inlet
YEL/BLU: Front Left Outlet

Is there continuity? — YES → Repair short in wire between the control unit and solenoid.
RED/BLU: Front Left Inlet
YEL/BLU: Front Left Outlet

NO

Faulty the control unit.

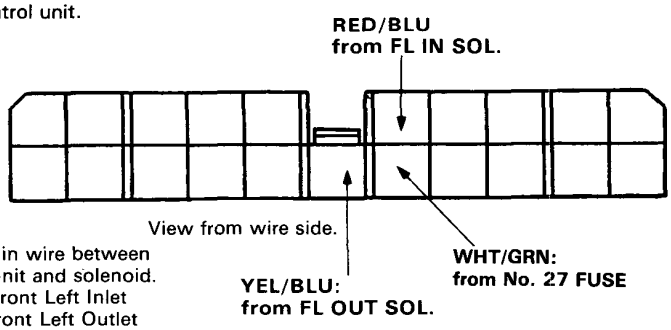

Problem Code 13 or 14: Rear Solenoid Related Problem

Disconnect wire harness from rear solenoid.

Check for resistance between RED and BLK terminals of rear solenoid.

Is there 1—3 Ω?
- NO → Faulty solenoid.
- YES ↓

Check for resistance between YEL and BLK terminals of rear solenoid.

Is there 1—3 Ω?
- NO → Faulty solenoid.
- YES ↓

Disconnect the 21P connector from the control unit.

Check for continuity between wire harness and body ground.
RED/WHT: Rear Inlet
YEL/WHT: Rear Outlet

Is there continuity?
- YES → Repair short in wire between the solenoid and control unit.
  RED/WHT: Rear Inlet
  YEL/WHT: Rear Outlet
- NO ↓

Faulty the control unit.

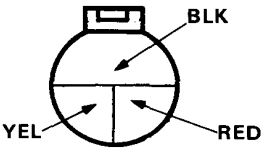

View from Terminal side.

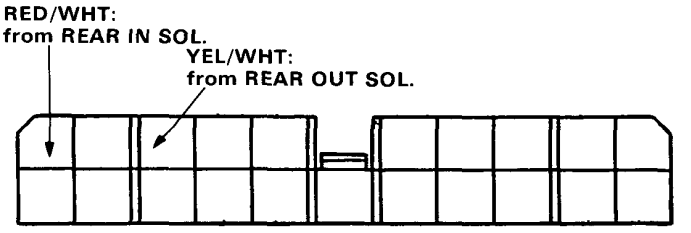

View from wire side.

Relieving Accumulator/Line Pressure

WARNING **Use the ALB T-Wrench before disassembling the parts shadowed in the illustration.**

1. Drain the brake fluid from the master cylinder and modulator reservoir thoroughly.
2. Remove the red cap from the bleeder on the top of the power unit.
3. Install the ALB T-Wrench on the bleeder screw and turn it out slowly 90° to collect high pressure fluid into reservoir. Turn the T-Wrench out one complete turn to drain the brake fluid thoroughly.
4. Retighten the bleeder screw and discard the fluid.
5. Reinstall the red cap.

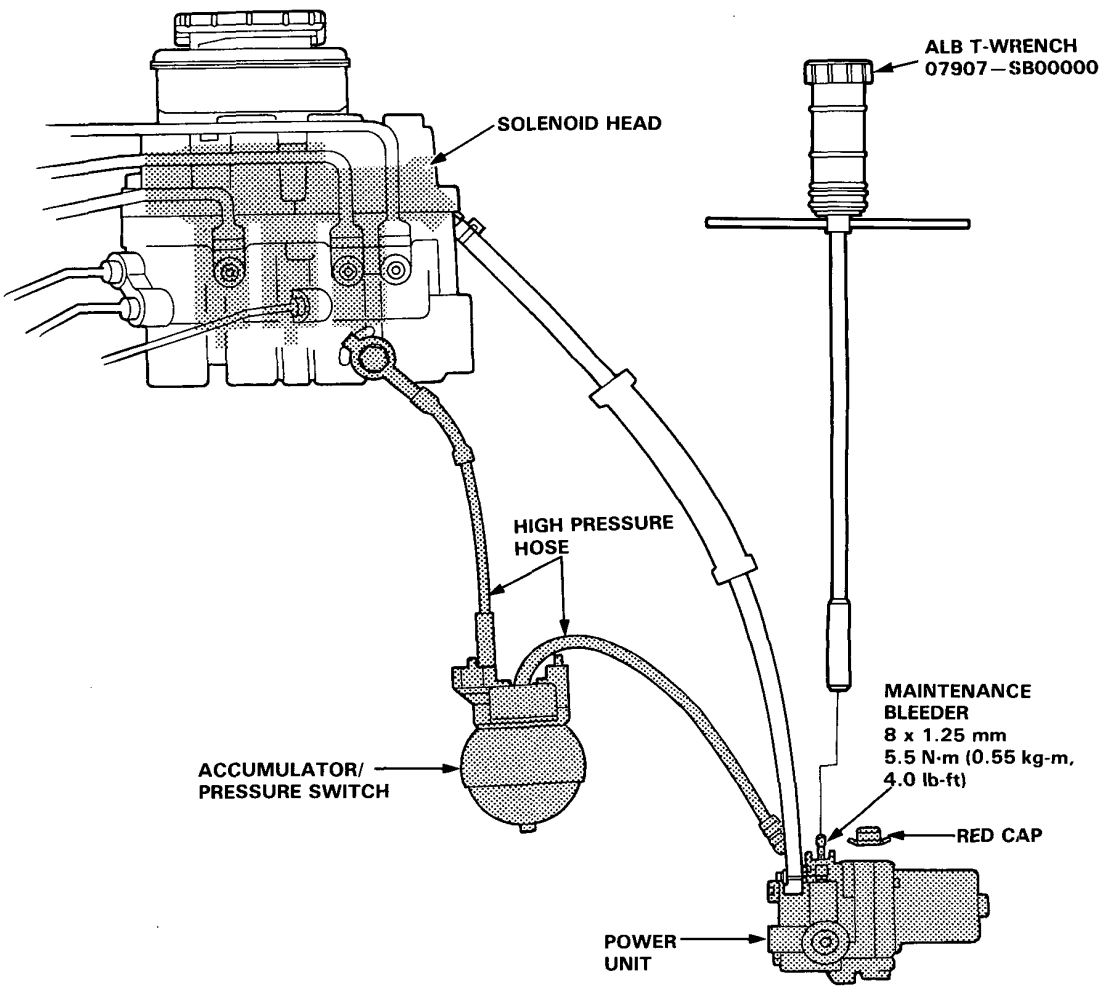

Index/Inspection

CAUTION:

- Do not spill brake fluid on the car; it may damage the paint; if brake fluid does contact the paint, wash it off immediately with water.
- To prevent spills, cover the hose joints with rags or shop towels.
- Clean all parts in brake fluid and air dry; blow out all passages with compressed air.
- Use only new clean brake fluid.
- Before reassembling, check that all parts are free of dust and other foreign particles.
- Replace parts with new ones whenever specified to do so.
- Make sure no dirt or other foreign matter is allowed to contaminate the brake fluid.
- Do not mix different brands of brake fluid as they may not be compatible.
- Do not reuse the drained fluid.
- Replace all rubber parts with new ones whenever the modulator is disassembled.

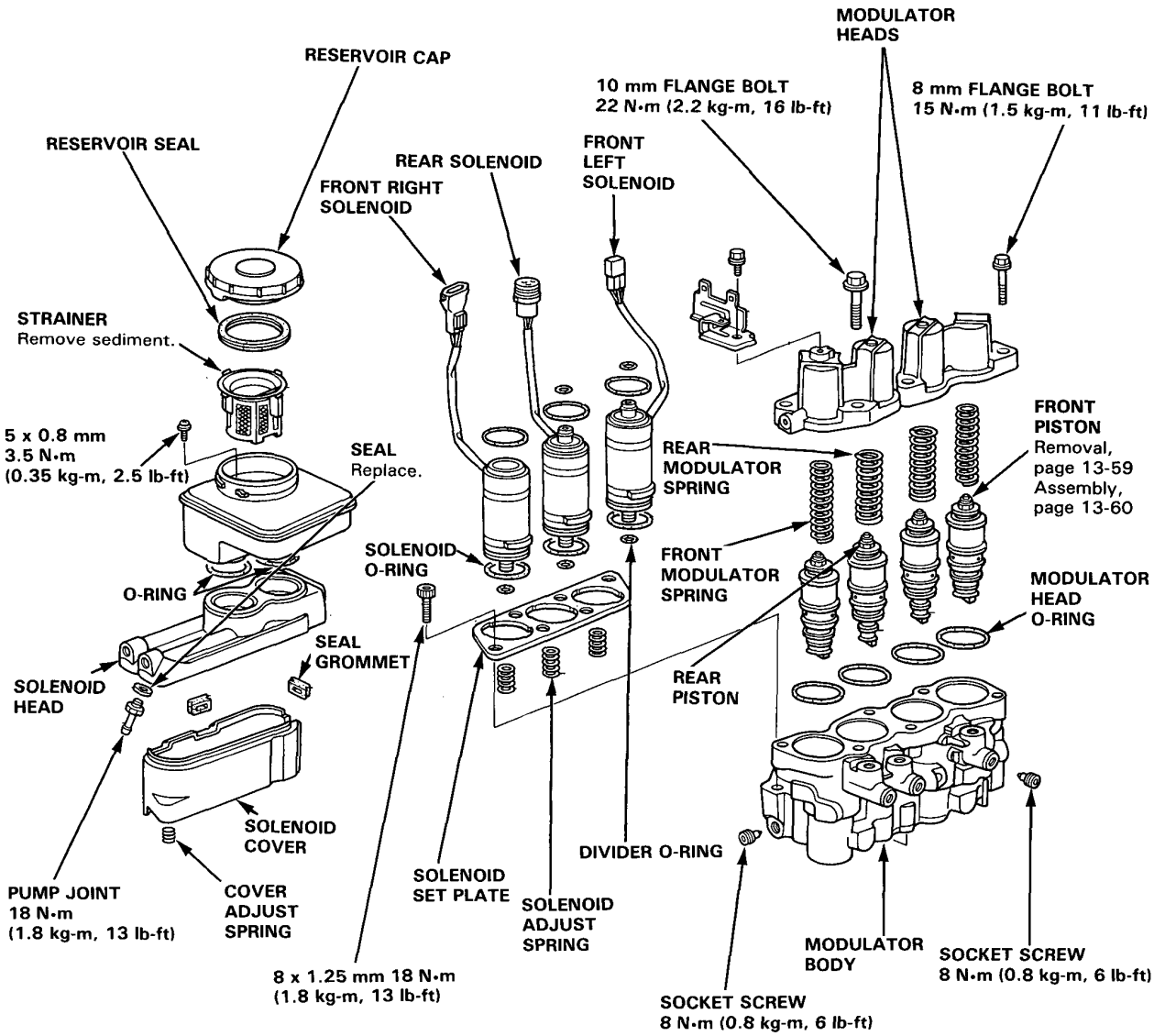

Modulator

Brake Fluid Draining

1. Draining brake fluid from modulator tank:
   The brake fluid may be sucked out through the top of the modulator tank with a syringe. It may also be drained through the pump joint after disconnecting the pump hose.

2. Draining brake fluid from master cylinder:
   Loosen the bleed screw and pump the brake pedal to drain the brake fluid from the master cylinder.

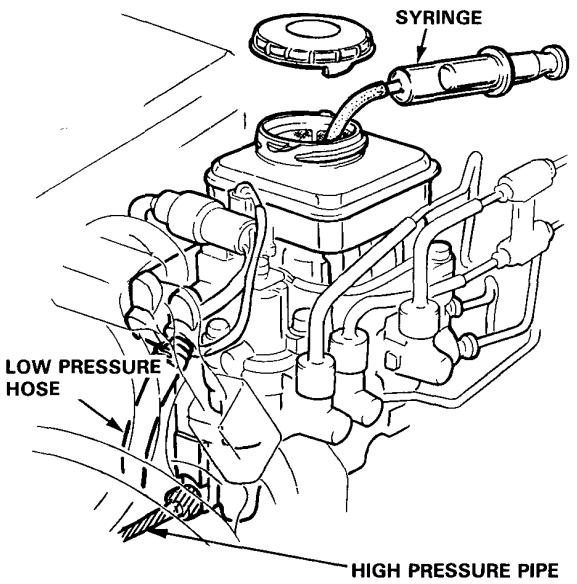

WARNING

- **High pressure fluid will squirt out if the tube shaded is removed or the solenoid head 8 mm and 10 mm bolts are loosened.**
- To drain high pressure brake fluid, follow the procedure under Relieving of High Pressure Brake Fluid on page 13-54.

Solenoid

Leak Test

1. Connect circuit tester (Ω range) between the Black and Yellow terminals of the accumulator pressure switch coupler (pink).

2. Attach the positive (+) lead of a fully charged 12 V battery to the Red/White terminal of the power unit motor coupler (yellow) and a switched negative (−) lead to the Green terminal.

3. Turn the switch on to allow sufficient pressure to build up within the accumulator and check for continuity shown in the circuit tester. If the circuit tester shows continuity (pressure switch turned on), the power unit for 4 seconds more, then turn the switch off.

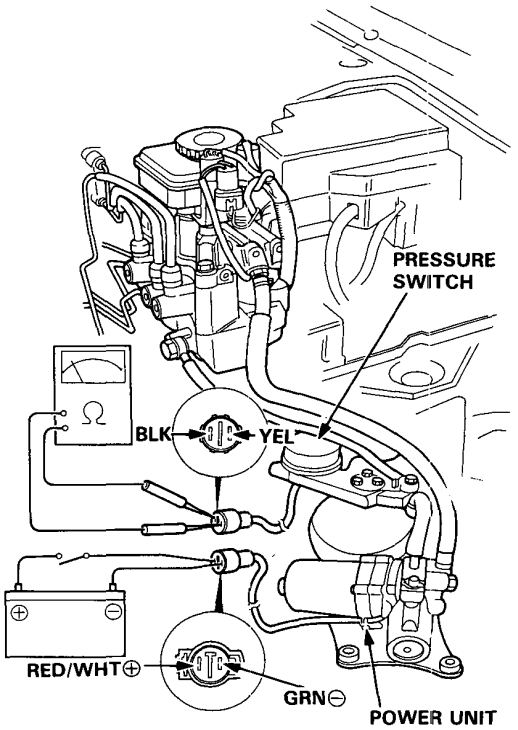

Check for continuity 1 minute after switch was turned off.

No continuity.....Leaky solenoid (if the pipe joint is tight) or faulty divider O-ring

(cont'd)

Leak Test (cont'd)

4. Apply a 12 V across the BLK and RED terminals of the solenoid coupler (pink) momentarily.

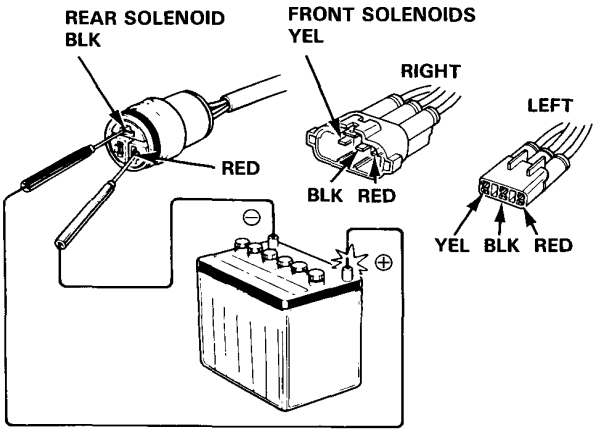

- Make sure that the solenoid clicks into position and does not hiss or squeak after it has clicked into position. Replace with a new one if it hisses or squeaks.
- Check the pressure switch for continuity within one minute. It is normal if there is continuity. If there is no continuity, solenoid is faulty and must be replaced.

NOTE: If faulty, the solenoid must be replaced as a unit unless only the O-ring is faulty.

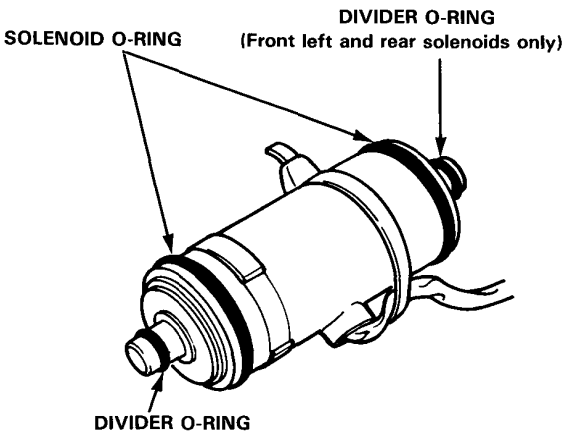

Removal

1. Drain the brake fluid from the modulator tank.
2. Drain the high pressure brake hose (page 13-67).
3. Disconnect the inlet hose.
4. Remove the reservoir strainer.
5. Remove the 5 mm screws and remove the reservoir.
6. Screw the 6 mm bolt into the threaded hole in the center of the solenoid head, reaise the solenoid head parallel to the ground and remove it.
7. Remove the solenoid cover.
8. Remove the hexagonal socket screws and loosen the solenoid set plate.
9. Turn the solenoid valves several times until they move freely and turn the solenoid valves 1/2 turn to align their projection with the cutout in the set plate.
   Remove the solenoid valves together with the set plate.

   CAUTION: The solenoid valves are delicate parts. Be careful not to drop them.

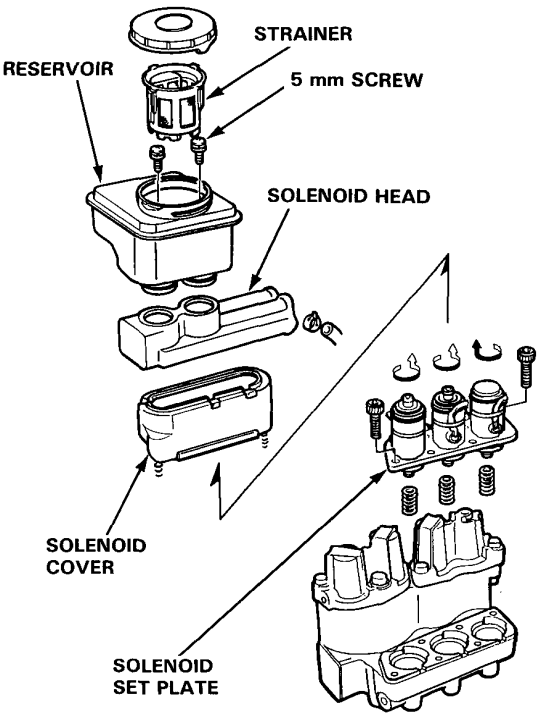

Leak Test (cont'd)

4. Apply a 12 V across the BLK and RED terminals of the solenoid coupler (pink) momentarily.

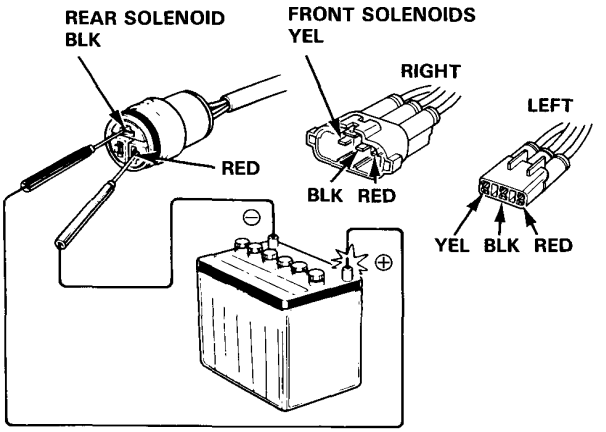

- Make sure that the solenoid clicks into position and does not hiss or squeak after it has clicked into position. Replace with a new one if it hisses or squeaks.
- Check the pressure switch for continuity within one minute. It is normal if there is continuity. If there is no continuity, solenoid is faulty and must be replaced.

NOTE: If faulty, the solenoid must be replaced as a unit unless only the O-ring is faulty.

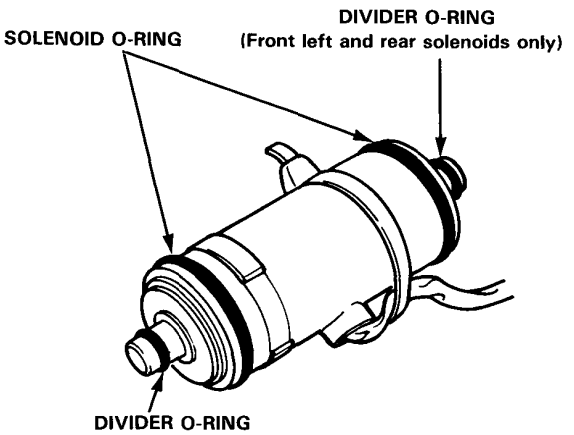

Removal

1. Drain the brake fluid from the modulator tank.
2. Drain the high pressure brake hose (page 13-67).
3. Disconnect the inlet hose.
4. Remove the reservoir strainer.
5. Remove the 5 mm screws and remove the reservoir.
6. Screw the 6 mm bolt into the threaded hole in the center of the solenoid head, reaise the solenoid head parallel to the ground and remove it.
7. Remove the solenoid cover.
8. Remove the hexagonal socket screws and loosen the solenoid set plate.
9. Turn the solenoid valves several times until they move freely and turn the solenoid valves 1/2 turn to align their projection with the cutout in the set plate.
   Remove the solenoid valves together with the set plate.

   CAUTION: The solenoid valves are delicate parts. Be careful not to drop them.

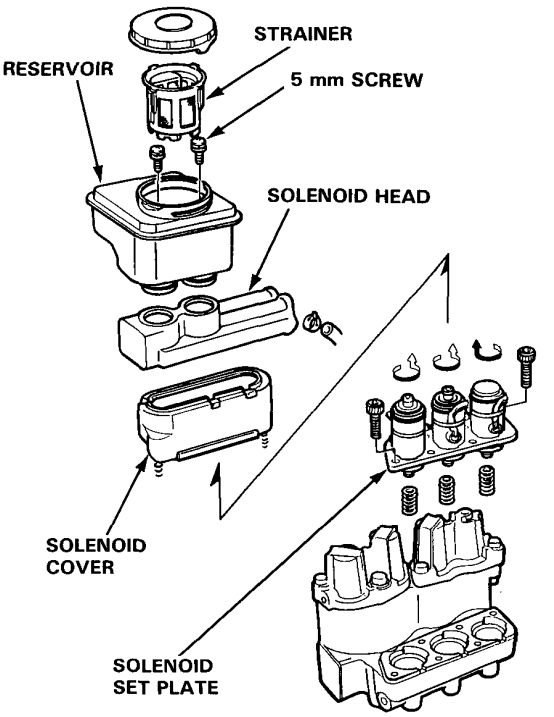

Solenoid

Inspection

1. Connect a tube to the inlet of the solenoid valve. Apply compressed air to the solenoid valve through the tube.

2. Check the solenoid valve for proper operation by connecting a 12 V fully charged battery to the 3-P coupler terminals:

   Voltage not applied: There should be no air flow.

   Black — Red: There should be air flow through IN and OUT.

   Black — Yellow: There should be air flow through IN.

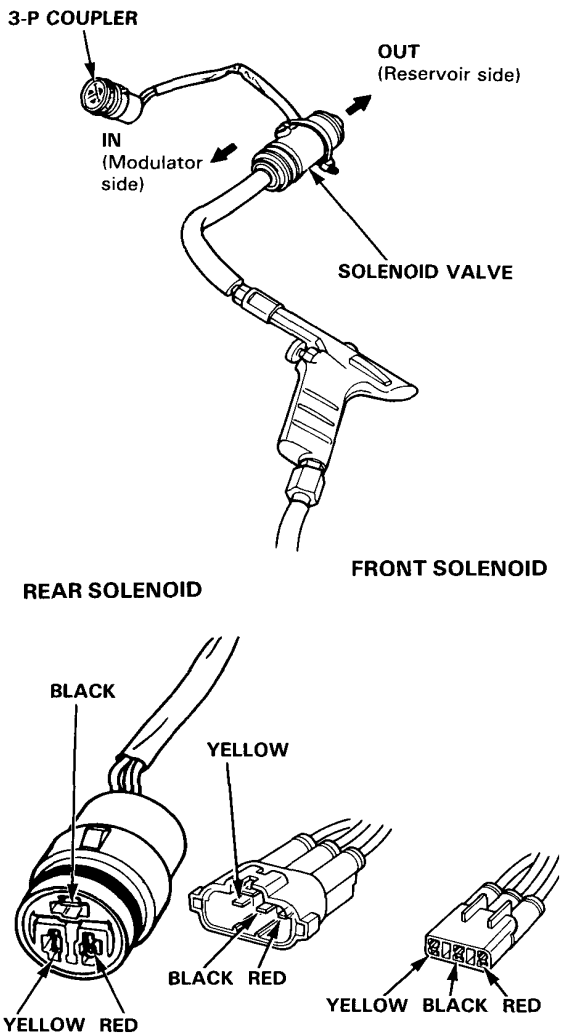

Installation

1. Fill the modulator body with brake fluid up to the step in the solenoid mounting hole.

   NOTE: On solenoid valve assembly, place shop rags over the solenoid valve and under the modulator valve to prevent the brake fluid from spilling on the valve.

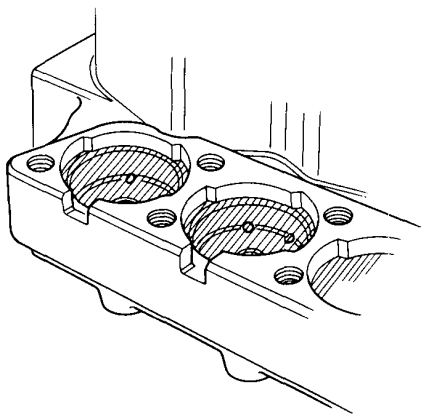

2. Coat the O-ring with the clean brake fluid and install the O-ring onto the solenoid valve.

3. Install the solenoid valves on the set plate.

   WARNING Each solenoid valve and set plate are marked for correct installation. If the solenoid valves are interchanged, the system will not work properly. Refer to the marks and be sure to install them in correct positions.

   - Align the projection on the solenoid valve with the cutout in the set plate and turn the valve 1/2 turn. The solenoid wire should face rearward.

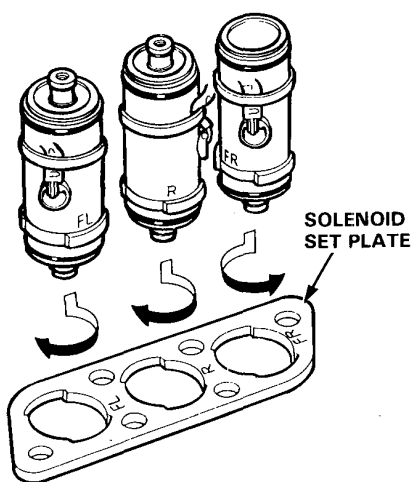

(cont'd)

Installation (cont'd)

4. Install the solenoid adjust springs on the modulator body.
5. Install the solenoid valves and set plate and secure with the hexagonal socket screws.
6. Install the solenoid cover and solenoid head.
7. Install the reservoir tank.
8. Install the tank filter.
9. Connect the low pressure hose.

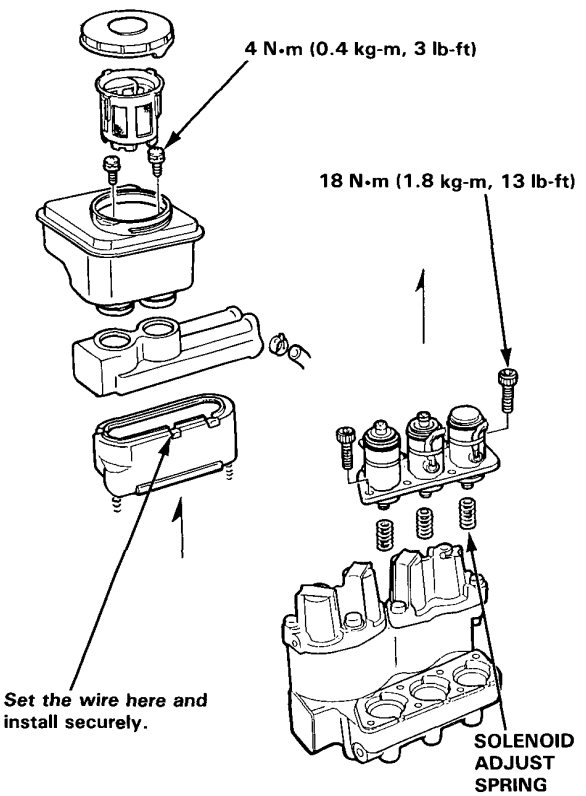

Removal

1. Remove the modulator heads.

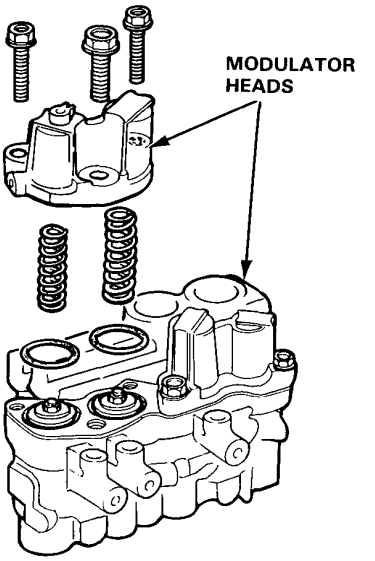

2. Insert the driver into the spring, pry off the piston assembly until it lifts up slightly and pull out the lock nut with a pair of pliers.

CAUTION:
- **Set the washer between the driver and modulator body to prevent damage to the body.**
- ***Be careful not to damage the piston sleeve.***

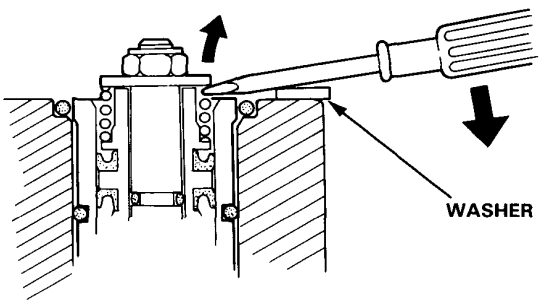

Installation (cont'd)

4. Install the solenoid adjust springs on the modulator body.
5. Install the solenoid valves and set plate and secure with the hexagonal socket screws.
6. Install the solenoid cover and solenoid head.
7. Install the reservoir tank.
8. Install the tank filter.
9. Connect the low pressure hose.

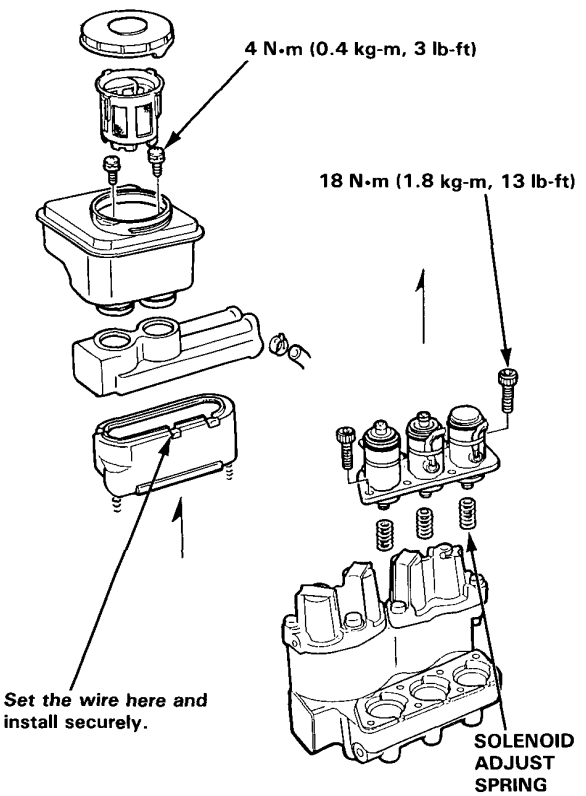

Removal

1. Remove the modulator heads.

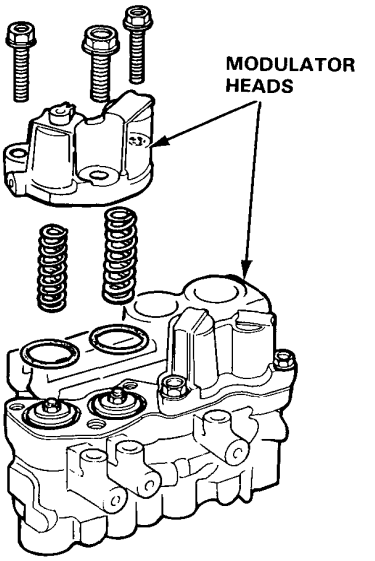

2. Insert the driver into the spring, pry off the piston assembly until it lifts up slightly and pull out the lock nut with a pair of pliers.

CAUTION:
- **Set the washer between the driver and modulator body to prevent damage to the body.**
- ***Be careful not to damage the piston sleeve.***

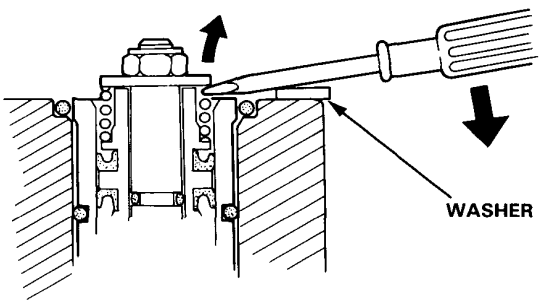

Piston

Installation

1. Apply rubber grease to the shaded sections of the piston assembly, shown in the drawing below.

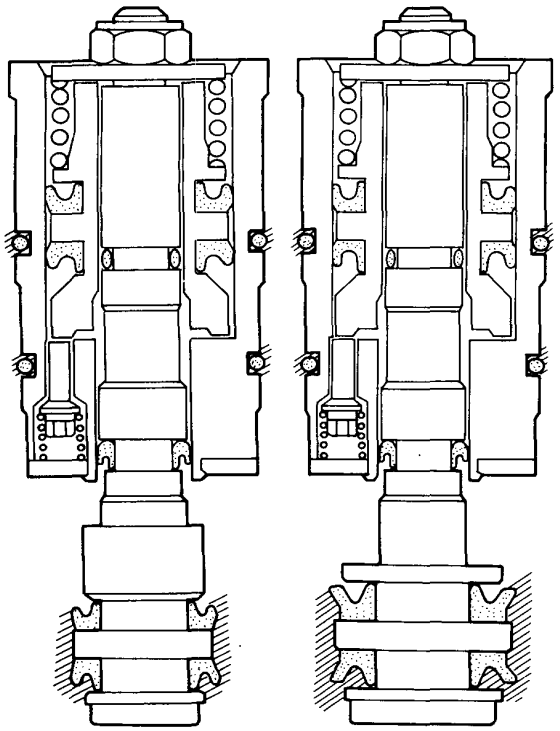

2. Adjust so that the brake fluid flows into the piston mounting hole in the modulator body.

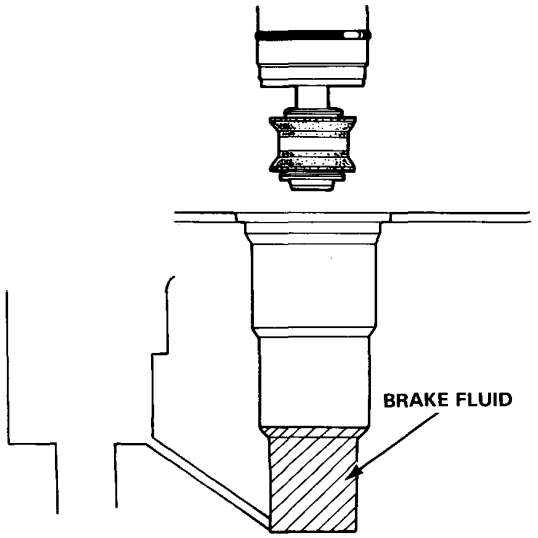

3. Set the piston assembly in the piston mounting hole in the modulator body and push down on the piston.

4. Push on the piston about 5 times until no bubbles come out of the solenoid side.

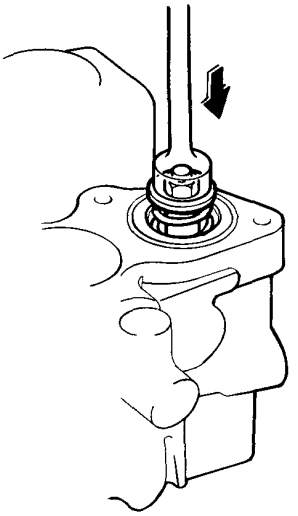

5. Install the modulator springs.

6. Install the solenoid heads with care not to pinch the O-rings.

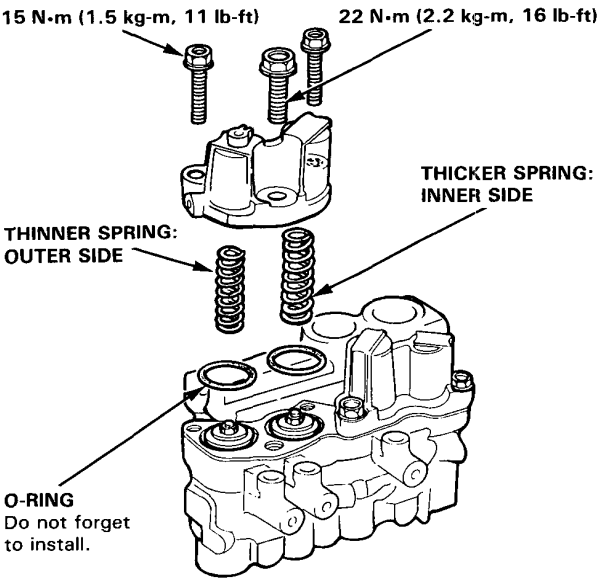

Index/Inspection

CAUTION:

- Do not attempt to disasemble the power unit parts except for those shown exploded in this illustration.
- Do not spill brake fluid on the car; it may damage the paint; if brake fluid does contact the paint, wash it off immediately with water.
- To prevent spills, cover the hose joints with rags or shop towels.
- Clean all parts in brake fluid and air dry; blow out all passages with compressed air.
- Before reassembling, check that all parts are free of dust and other foreign particles.
- Replace parts with new ones whenever specified to do so.
- Make sure no dirt or other foreign matter is allowed to contaminate the brake fluid.
- Do not mix different brands of brake fluid as they may not be compatible.
- Do not reuse the drained fluid.

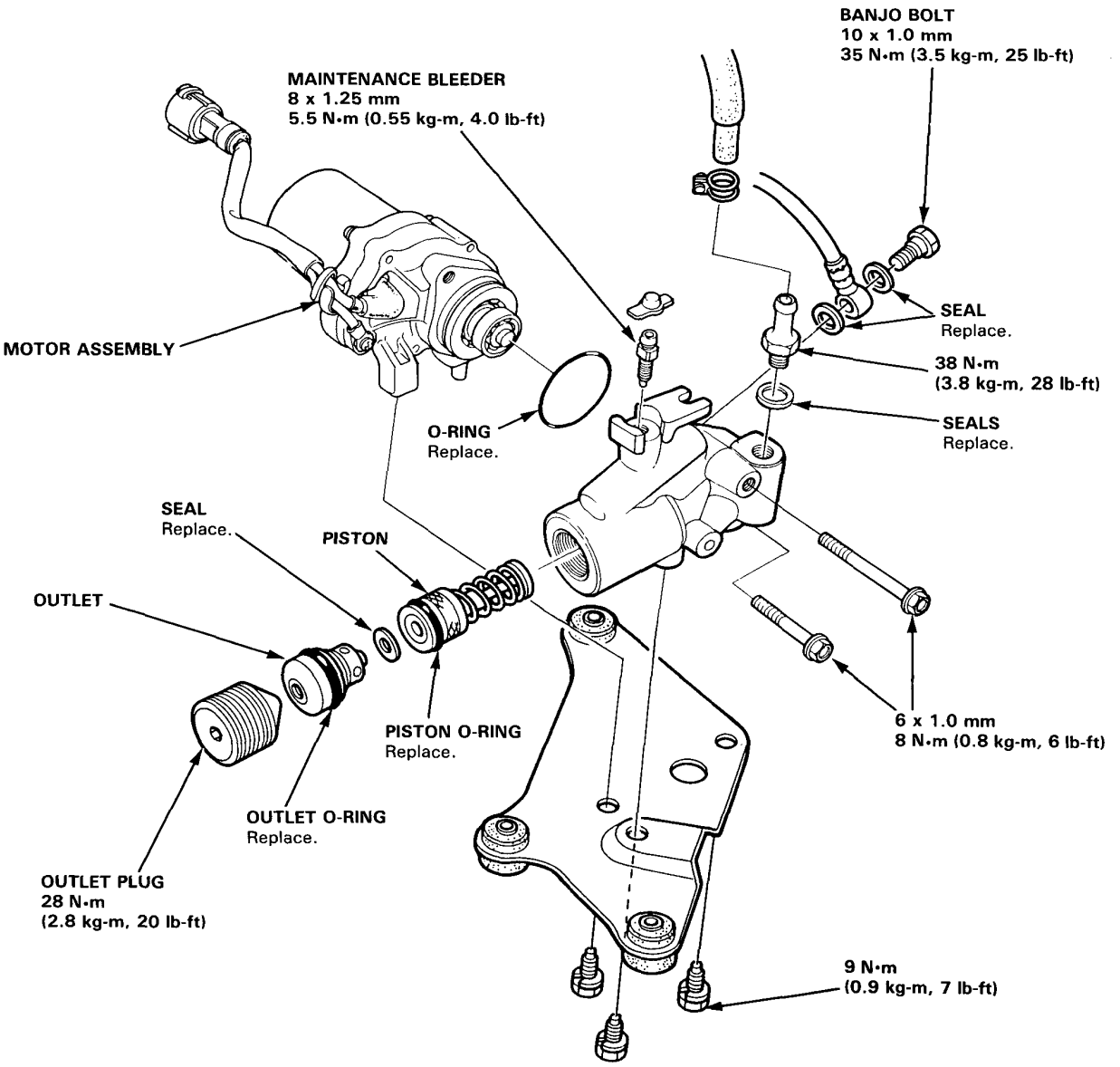

Disassembly

1. Remove the pump bracket.
2. Remove the 6 mm bolts attaching the pump to the pump motor.

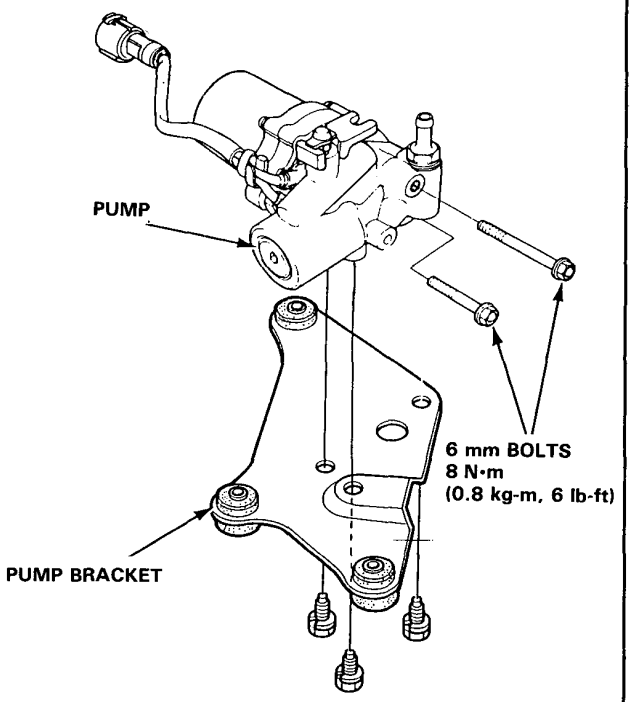

3. Separate the motor from the pump while rotating the pump right and left.

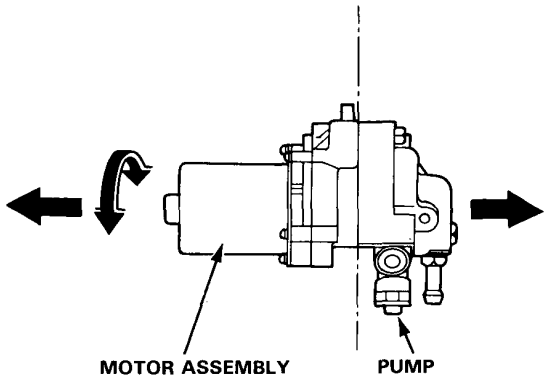

NOTE: About 10 cc (0.6 cu-in) of brake fluid will flow out when the motor is removed from the pump.

4. Wash the motor with clean brake fluid only on the exposed end and blow dry with compressed air.

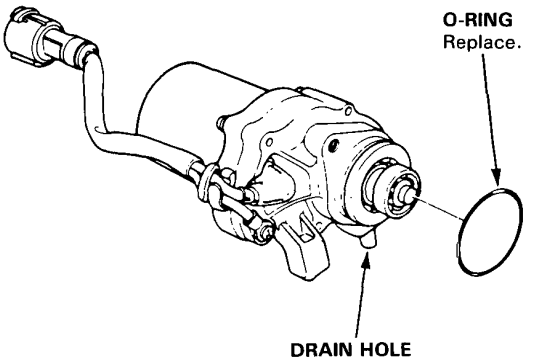

NOTE: Do not wash or dip the motor in brake fluid. Also be careful not to allow oil or water to enter the inside through the water drain hole.

5. Remove the outlet plug from the mechanical pump with a hex. wrench.
6. Set the 6 mm bolt on the outlet and remove it by pulling the bolt.
7. Remove the gasket.
8. Press the piston out of the mechanical pump body.

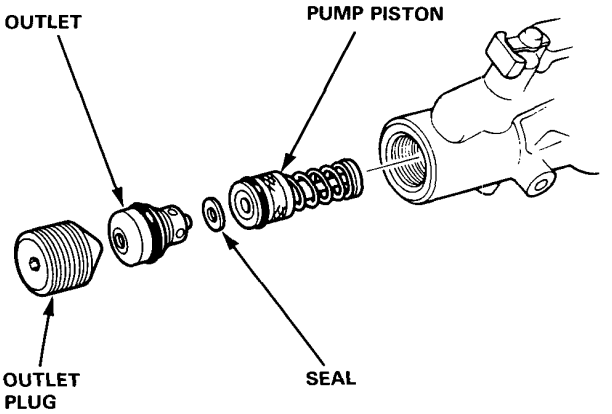

Reassembly

1. Install a new O-ring on the pump motor.

2. Coat the O-ring with clean brake fluid and install the pump on the motor while rotating it right and left by hand.

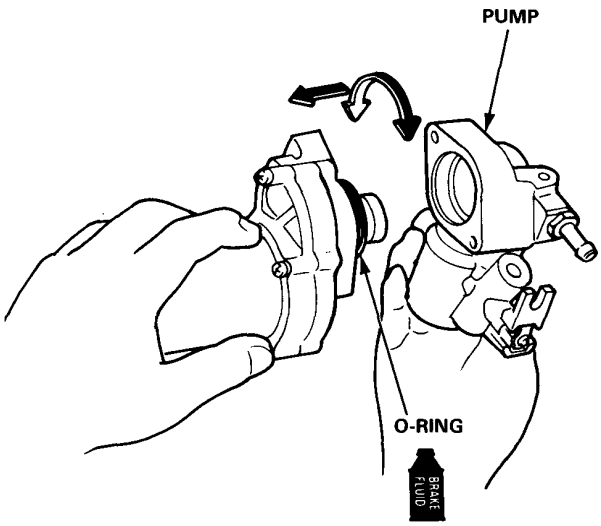

3. Install the 6 mm bolts and tighten.

4. Coat a new pump piston O-ring with the clean brake fluid and insert the pump piston into the pump.

5. Install the gasket.

6. Coat the outlet O-ring with the brake fluid and insert the outlet into the pump.

7. Loosely tighten the outlet plug.

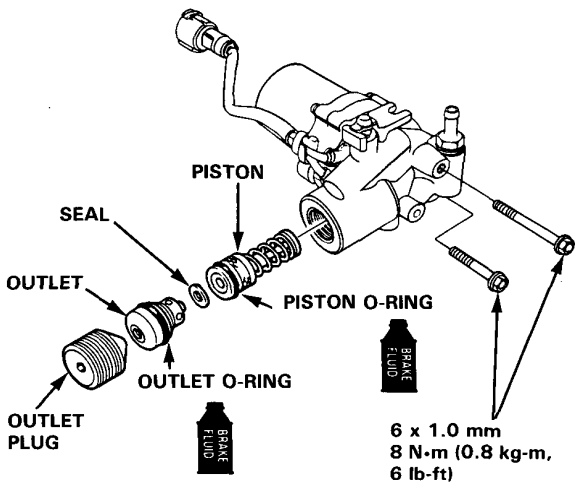

8. Place the motor in a vise as shown and tighten the outlet plug.

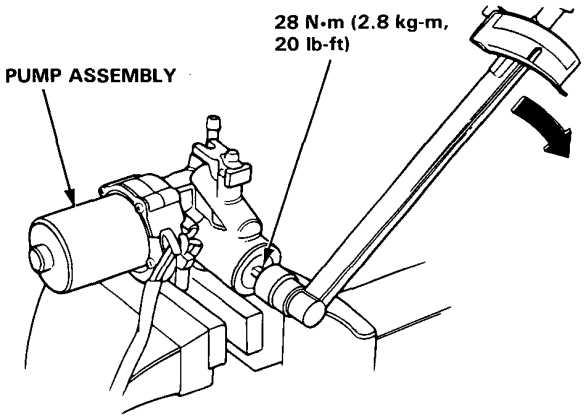

NOTE: Clamp the pump in a vise only as shown above.

9. Install the pump bracket.

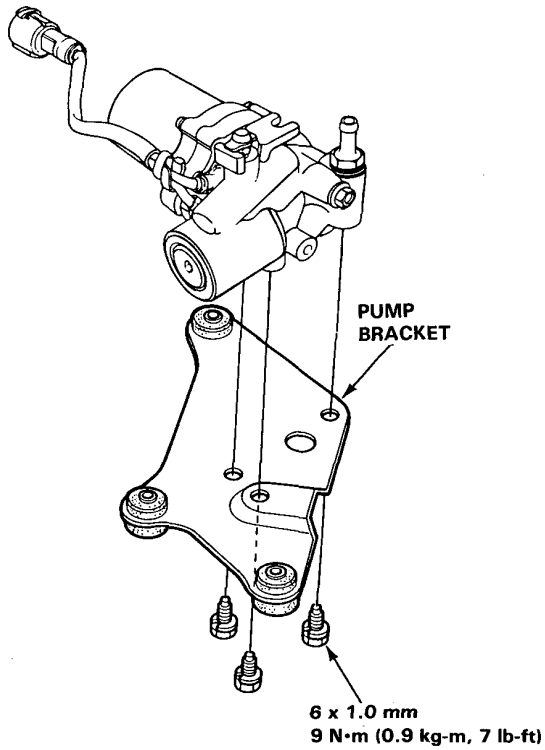

Accumulator

Index/Inspection

CAUTION:

- Do not spill brake fluid on the car; it may damage the paint; if brake fluid does contact the paint, wash it off immediately with water.
- To prevent spills, cover the hose joints with rags or shop towels.
- Clean all parts in brake fluid and air dry; blow out all passages with compressed air.
- Use only new clean brake fluid.
- Before reassembling, check that all parts are free of dust and other foreign particles.
- Replace parts with new ones whenever specified to do so.
- Make sure no dirt or other foreign matter is allowed to contaminate the brake fluid.
- Do not mix different brands of brake fluid as they may not be compatible.
- Do not reuse the drained fluid.

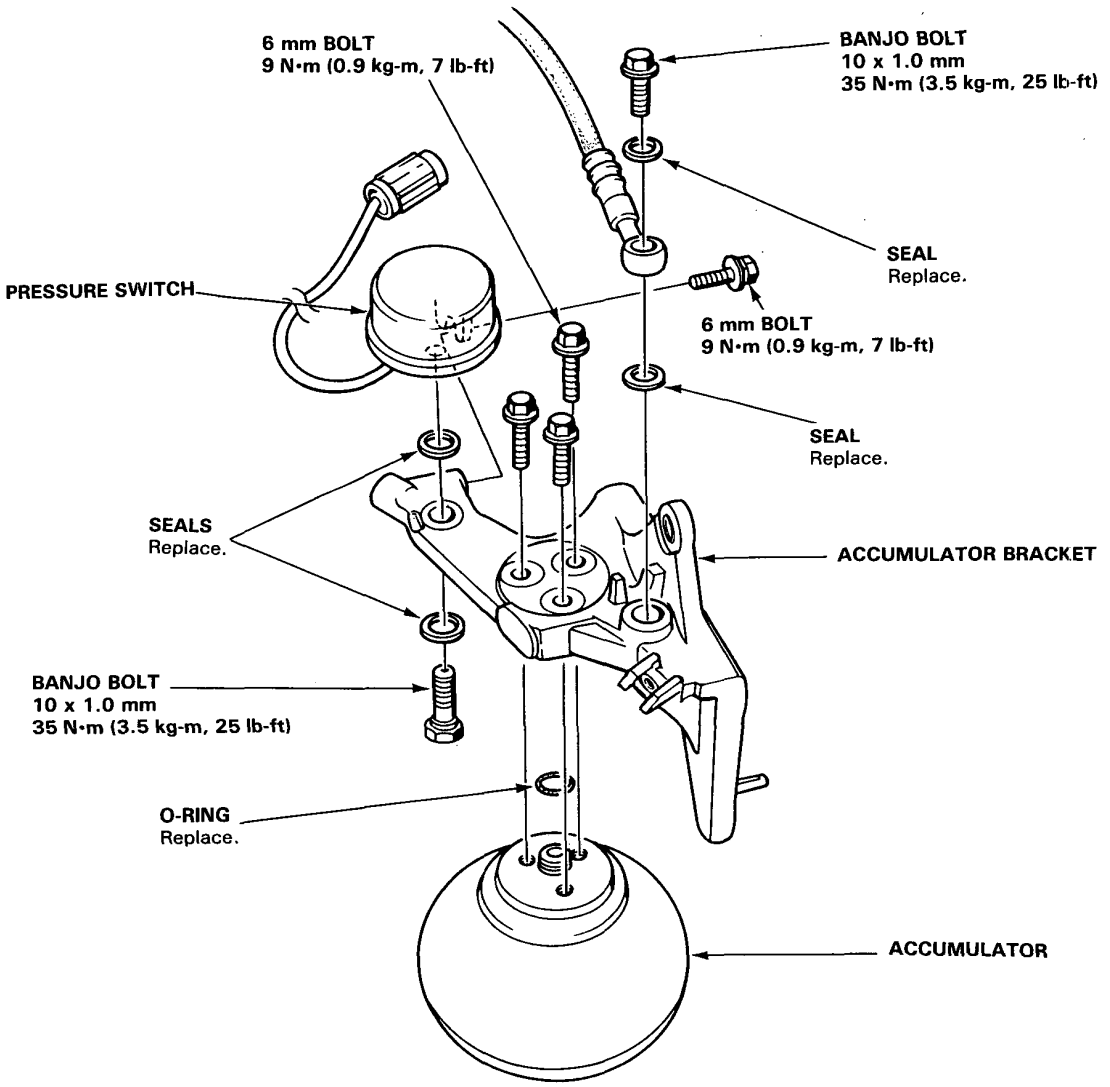

Overhaul

1. Drain the high pressure brake fluid from the power unit (see page 13-57).

2. Remove three 6 mm flange bolts, then remove the accumulator from the accumulator bracket.

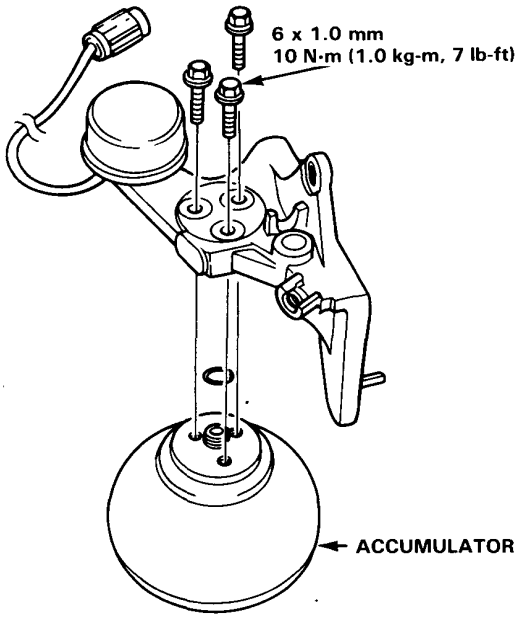

3. Remove the banjo bolt.

4. Remove the 6 mm bolt and pressure switch.

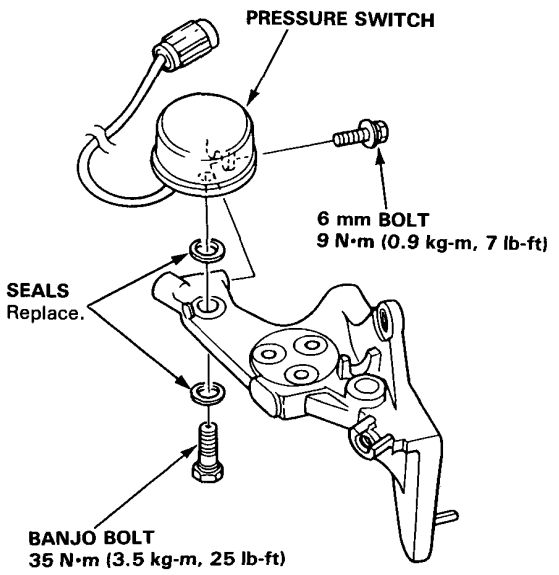

5. Installation is the reverse order of removal.

Accumulator Disposal

WARNING The accumulator contains high pressure nitrogen gas, do not puncture expose to flame or attempt to disassemble the accumulator or it may explode; severe personal injury may result.

1. Secure the accumulator in a vice so that the relief plug points straight up.

2. Slowly turn the plug 3-1/2 turns and then wait 3 minutes for all pressure to escape.

3. Remove the plug completely and dispose of the accumulator unit.

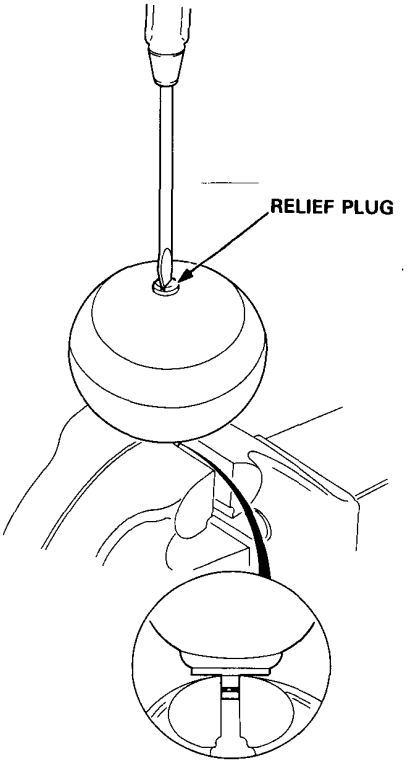

Air Bleeding

NOTE: Do not depress the brake pedal while using the ALB checker to bleed air from the system.

1. Fill the modulator reservoir with brake fluid up to the MAX level.

2. Disconnect the 6P coupler (PNK) from the cover mounted in front of the console and connect it to the ALB checker.

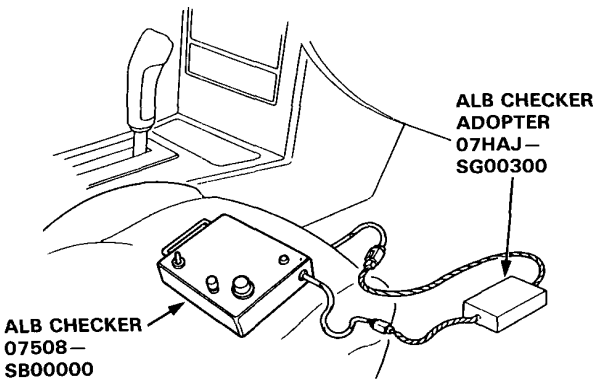

CAUTION: Place the car on level ground with the wheels blocked. Shift the transmission to P or Nutral.

3. Start the engine.

4. Release the parking brake.

5. Turn the power switch of ALB checker ON.

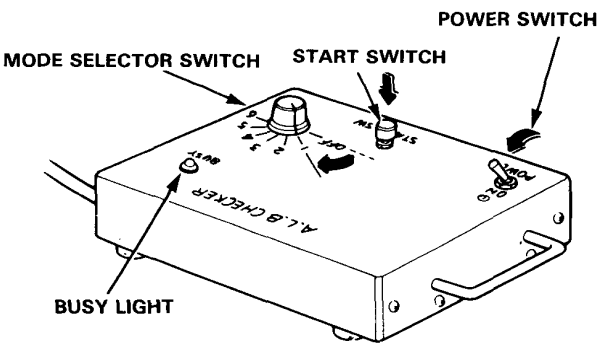

6. Turn the mode selector switch to 1.

7. Press the start switch.

8. Make sure that the motor runs.

9. Wait for the motor to stop.

10. Turn the mode switch to 2.

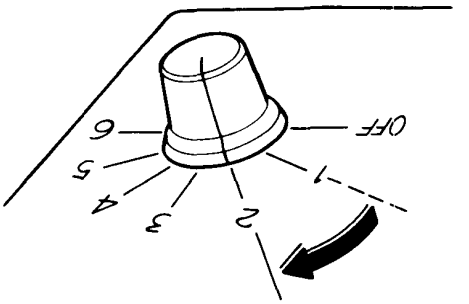

11. Press the start switch.

12. Brake fluid in the reservoir will bubble briskly for 20 seconds after the switch is pressed. Wait for 4 to 5 minutes until the brake fluid stops bubbling.

13. Turn the mode switch to 6.

14. Repeat steps 11 and 12.

15. Repeat steps 10 through 14 two or three times.

16. Fill the reservoir with brake fluid up to the MAX level.

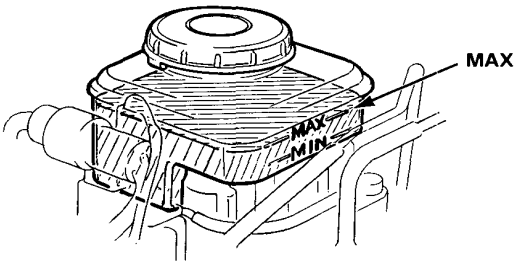

17. Install the cap.

18. Check the ALB function in all modes (page 13-44). There should be kickback in modes 2 through 6.

CAUTION: If the kickback is weak, re-bleed air from the system.

Control Unit

Replacement

1. Remove the rear seat back.
2. Remove the control unit attaching bolts, then remove the control unit.

CAUTION:
- If the control unit attaching bolts are removed, the control unit's memory is cleared.
- Handle the control unit with care.

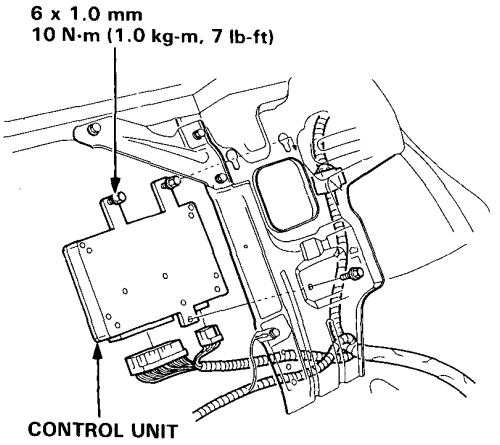

Installation is the reverse order of removal.

NOTE: Check the [ALB] warning light function by turning the ignition switch ON.

Fail Safe Relays/ Motor Relay

Inspection

1. Check for continuity between terminals ③ and ④. There should be no continuity.
2. Connect a 12V battery across terminals ① and ②. There should be continuity between terminals ③ and ④.

Fail Safe Relays

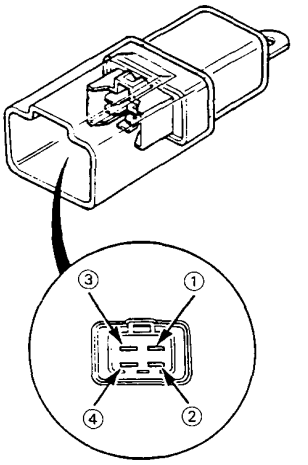

Motor Relay

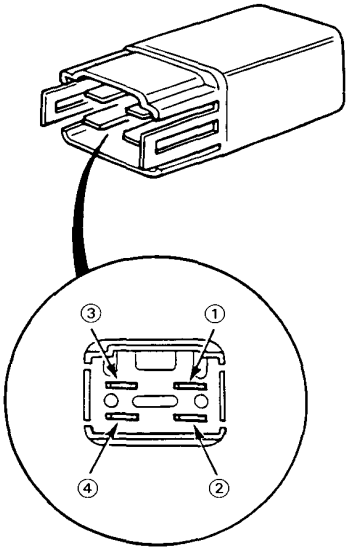

Inspection

Front

1. Check the pulser for chipped or damaged teeth.

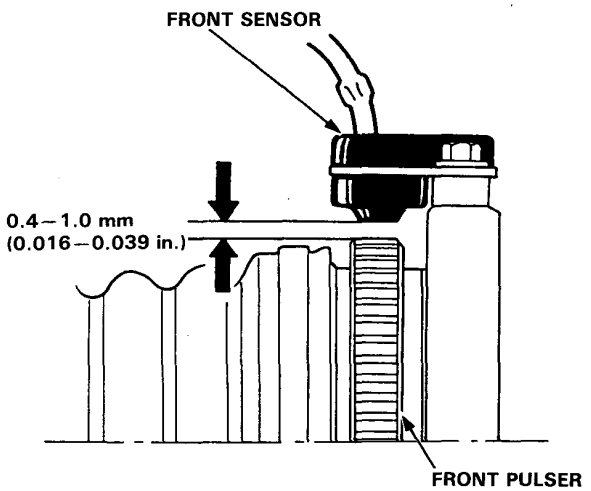

2. Measure air gap between the sensor and pulser all the way around while rotating the driveshaft by hand.

STANDARD: 0.4–1.0 mm (0.016–0.039 in.)

NOTE: If the gap exceeds 1.0 mm (0.039 in.), the probability is a distorted knuckle which should be replaced.

Rear

1. Check the rear pulser for chipped or damaged teeth.

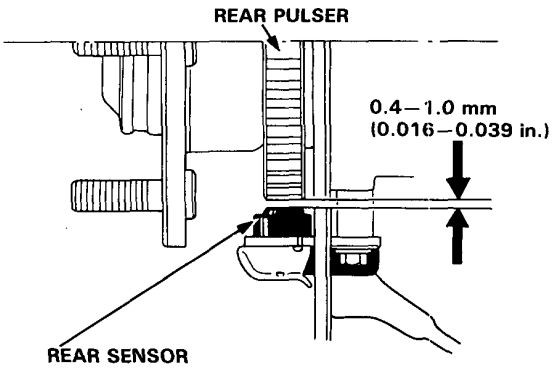

2. Measure the air gap between the sensor and pulser all the way around while rotating the hub bearing unit by hand.

Standard: 0.4–1.0 mm (0.016–0.039 in.)

NOTE: If the gap exceeds 1.0 mm (0.039 in.), the probability is a distorted knuckle which should be replaced.

Front Sensor Replacement

NOTE:
- Be careful when installing the sensors to avoid twisting the wires using the white line on the wires as guide.

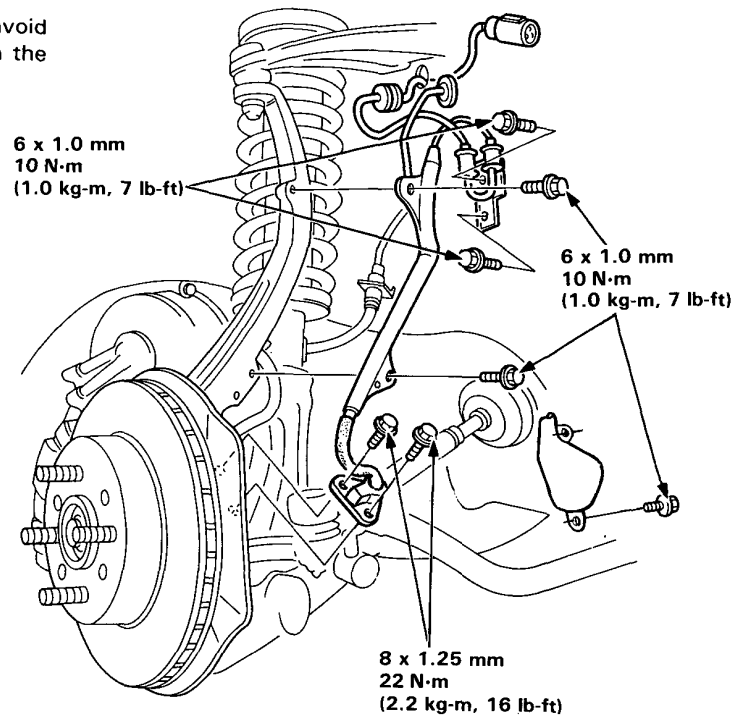

Rear Sensor Replacement

NOTE:
- Be careful when installing the sensors to avoid twisting the wires using the white line on the wires as a guide.

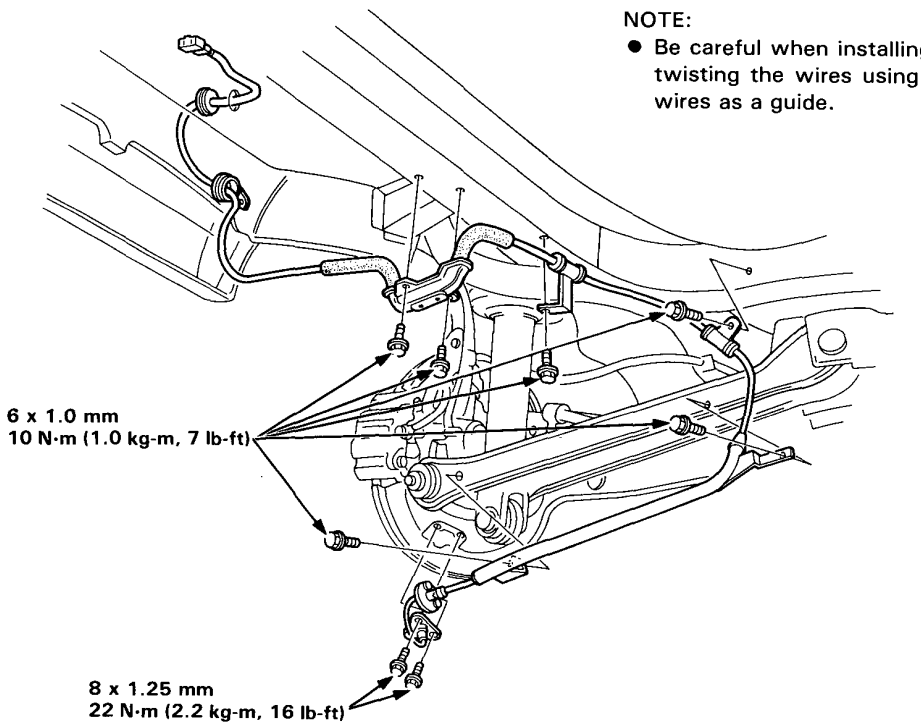

Door

Index

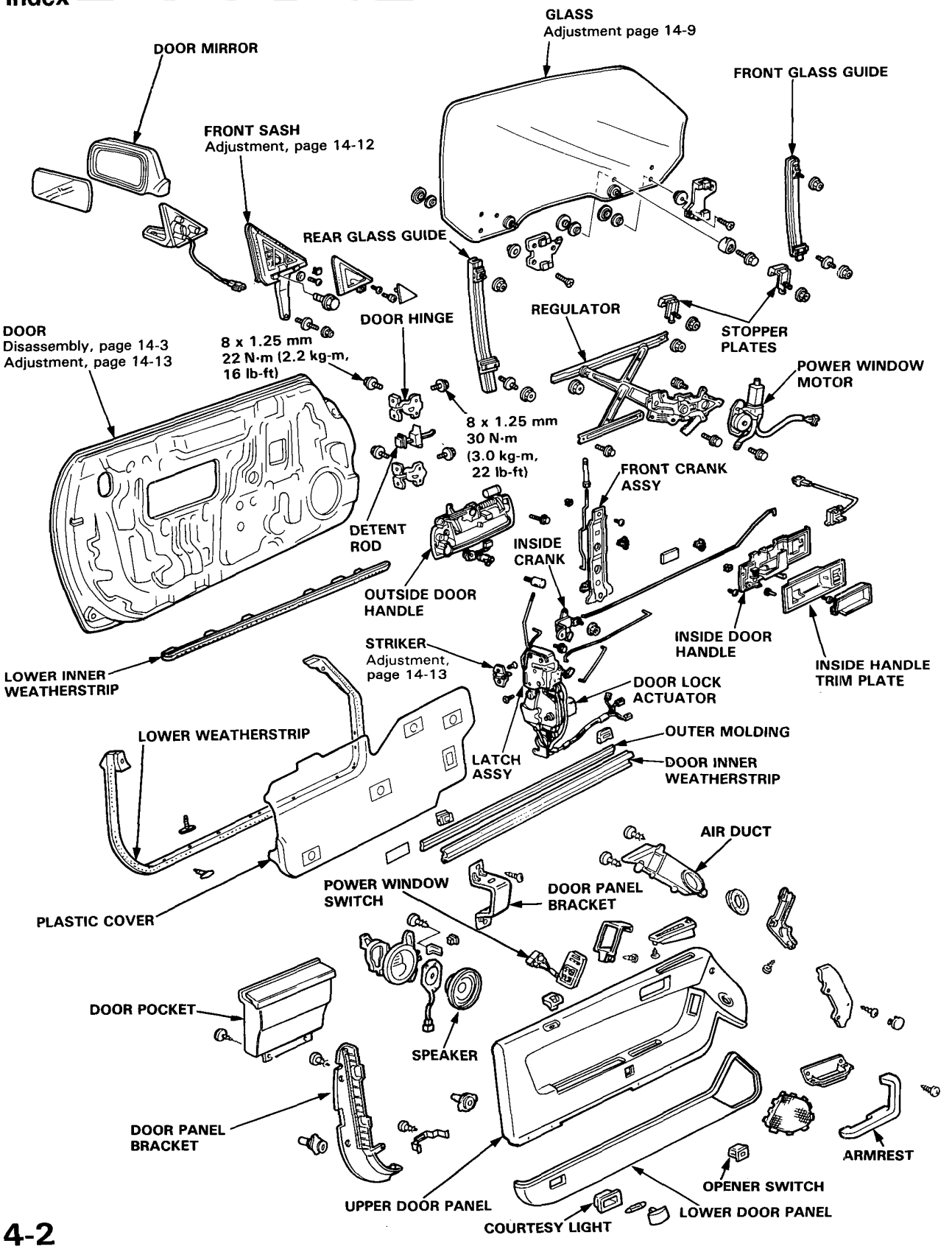
GLASS
Adjustment page 14-9
DOOR MIRROR
FRONT GLASS GUIDE
FRONT SASH
Adjustment, page 14-12
REAR GLASS GUIDE
DOOR HINGE
REGULATOR
STOPPER PLATES
DOOR
Disassembly, page 14-3
Adjustment, page 14-13
8 x 1.25 mm
22 N·m (2.2 kg-m, 16 lb-ft)
POWER WINDOW MOTOR
8 x 1.25 mm
30 N·m
(3.0 kg-m, 22 lb-ft)
FRONT CRANK ASSY
DETENT ROD
INSIDE CRANK
OUTSIDE DOOR HANDLE
INSIDE DOOR HANDLE
STRIKER
Adjustment, page 14-13
INSIDE HANDLE TRIM PLATE
LOWER INNER WEATHERSTRIP
DOOR LOCK ACTUATOR
LOWER WEATHERSTRIP
OUTER MOLDING
LATCH ASSY
DOOR INNER WEATHERSTRIP
AIR DUCT
POWER WINDOW SWITCH
DOOR PANEL BRACKET
PLASTIC COVER
DOOR POCKET
SPEAKER
DOOR PANEL BRACKET
ARMREST
OPENER SWITCH
UPPER DOOR PANEL
LOWER DOOR PANEL
COURTESY LIGHT

Disassembly

1. Remove the inside door handle trim plate cap.
2. Remove the trim plate screws, then carefully remove the trim plate.

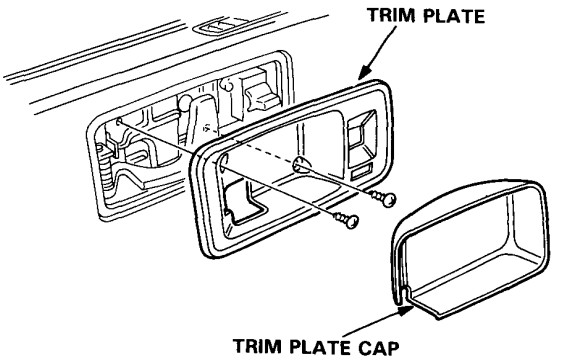

3. Remove the armrest screw and 6 door panel screws, then pry apart the door panel clips. Lift the door panel straight up off the sill, and disconnect the courtesy light and power window wires.

   NOTE: The armrest and courtesy light are removed with the door panel.

Door Panel Release Tool

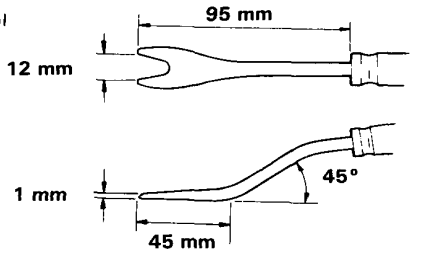

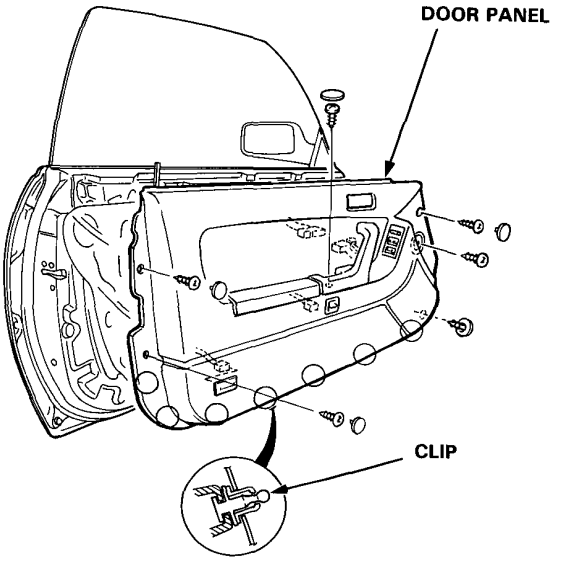

4. Remove the armrest, door pocket, power window switch, and courtesy light, from the door panel as required.
5. Remove the retainer, then remove the trunk lid opener switch.

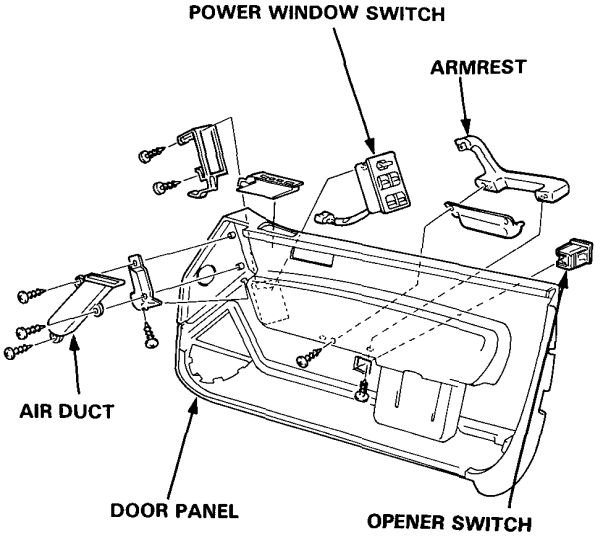

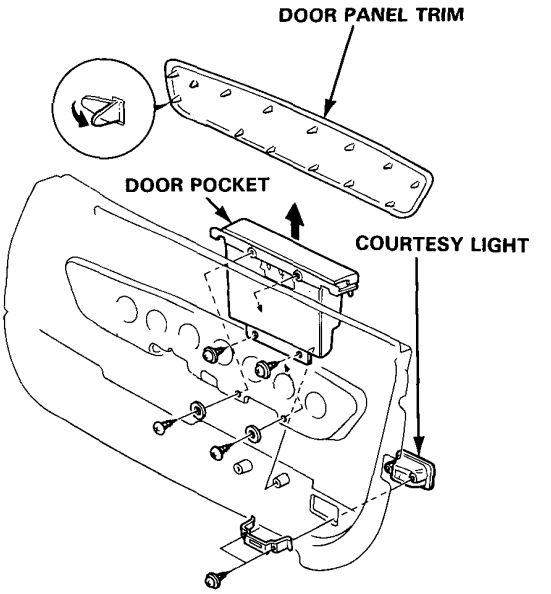

(cont'd)

Disassembly (cont'd)

6. Remove the screws, then remove the power window controller, speaker and door panel bracket.

7. Carefully remove the plastic cover.

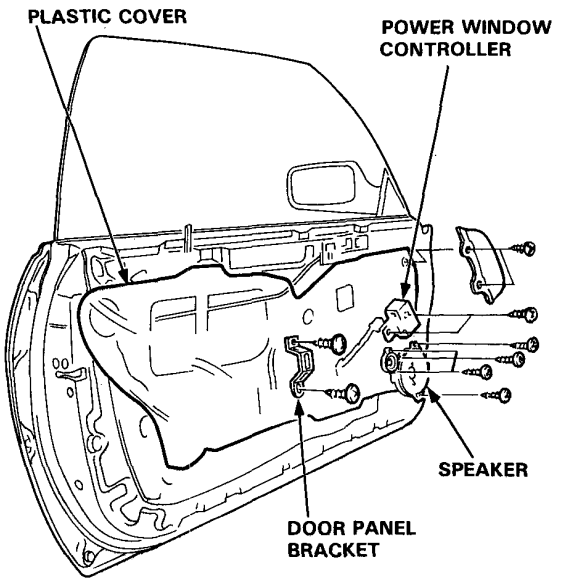

8. Remove the 3 screws, disconnect the connector and the latch rod, then remove the inside door handle.

   NOTE: The connector is attached to the door with a clip, so press the clip protrusions together from the rear and push the connector out.

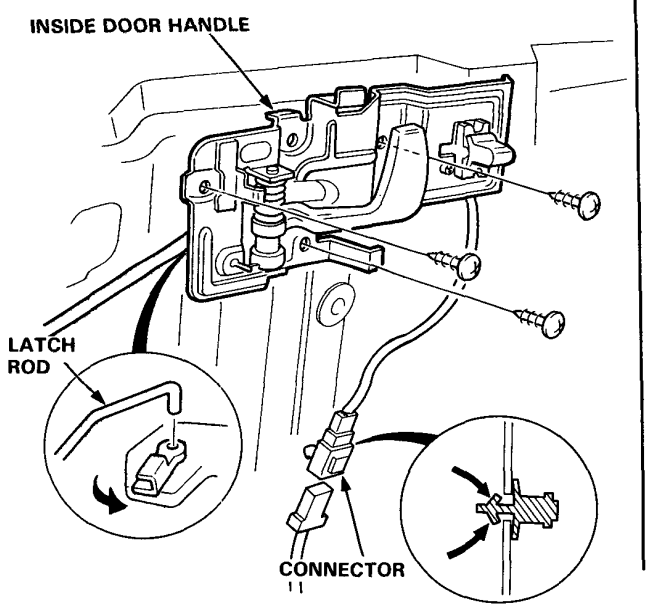

9. Remove the 2 screws, disconnect the rod, then remove the front crank assembly.

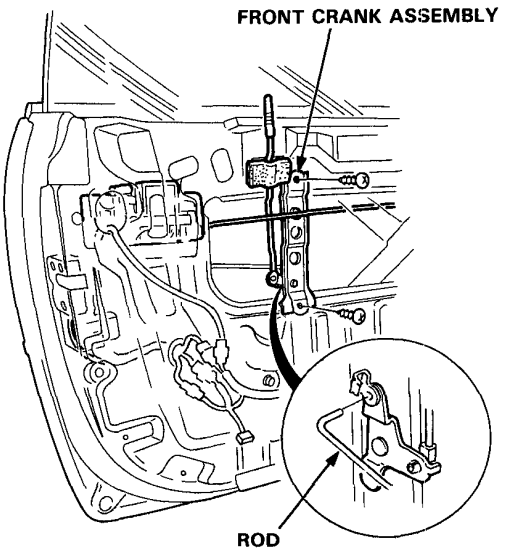

10. Remove the nut and loosen the bolt, disconnect the rods, then remove the inside crank.

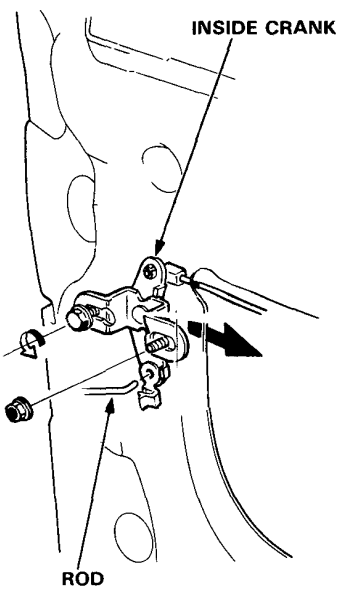

11. Use protective tape around the edge of the door handle to prevent scratching the paint.

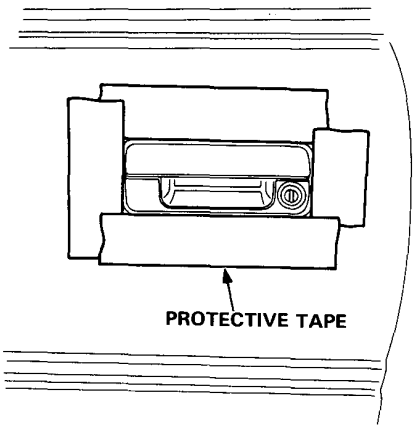

12. Re-connect the window switch or a 12V battery to operate the window regulator.

13. Roll up the window fully.

14. Disconnect the outside door handle coupler and latch assembly coupler.

15. Pry the door handle latch rod out of its joint using a flat screwdriver.

16. Remove the 2 bolts, then remove the outside door handle.

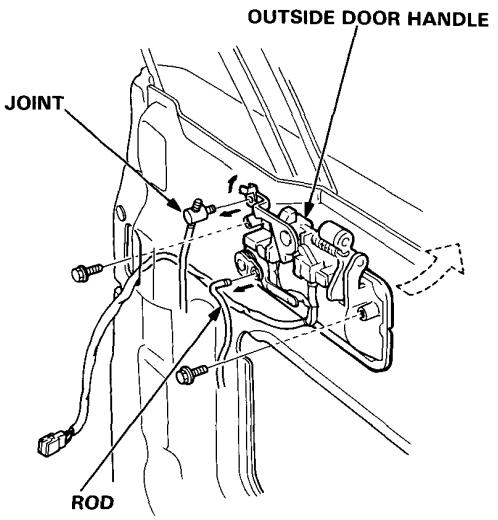

17. Remove the screws and take the latch assembly off the door, then push the latch assembly and rod inside the door.

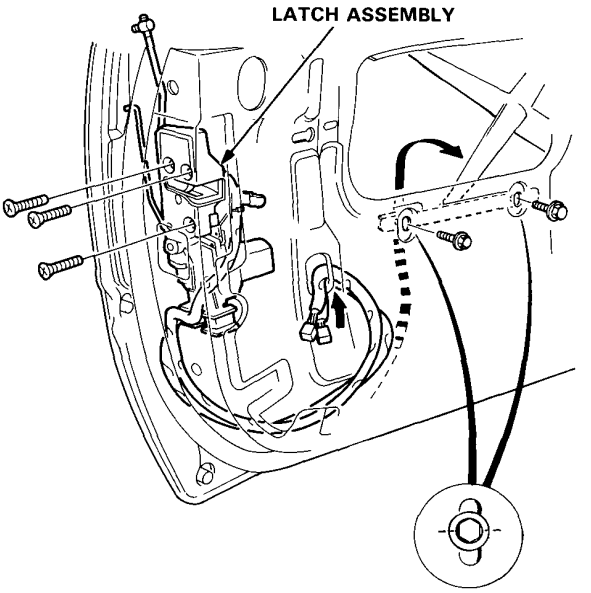

18. Open the window fully.
19. First remove the weatherstrip retaining screw and clips, then pull off the weatherstrip.
20. Remove the outer molding mounting screw.

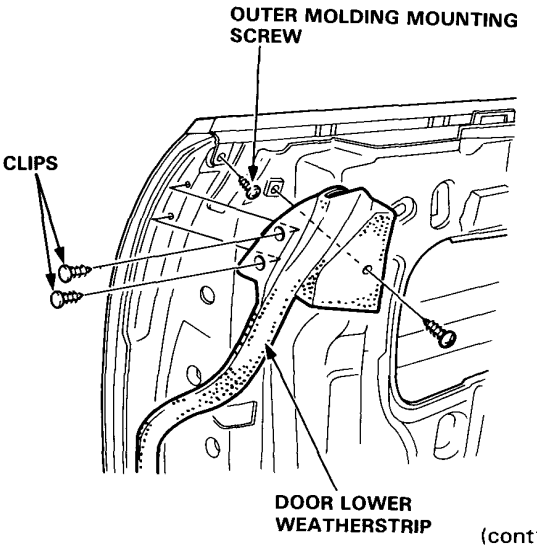

(cont'd)

Disassembly (cont'd)

21. Remove the door mirror (page 14-14).

    Remove the screw and clips, then remove the outer molding.

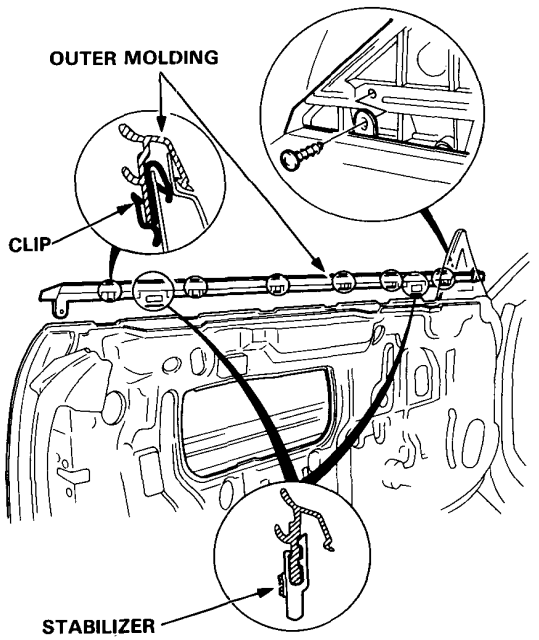

22. Remove the nuts then remove the stopper plates.

    NOTE: Scribe a line across the nuts and door to ensure original adjustment.

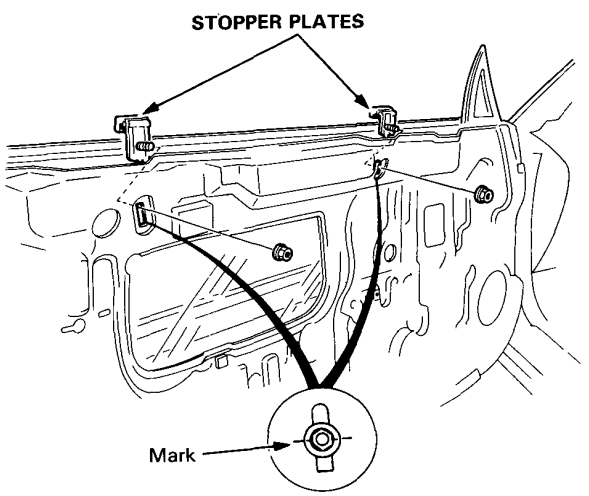

23. Remove the 2 bolts and adjuster lock nut, then remove the front sash.

    NOTE: Hold the adjuster with a screwdriver when removing the lock nut.

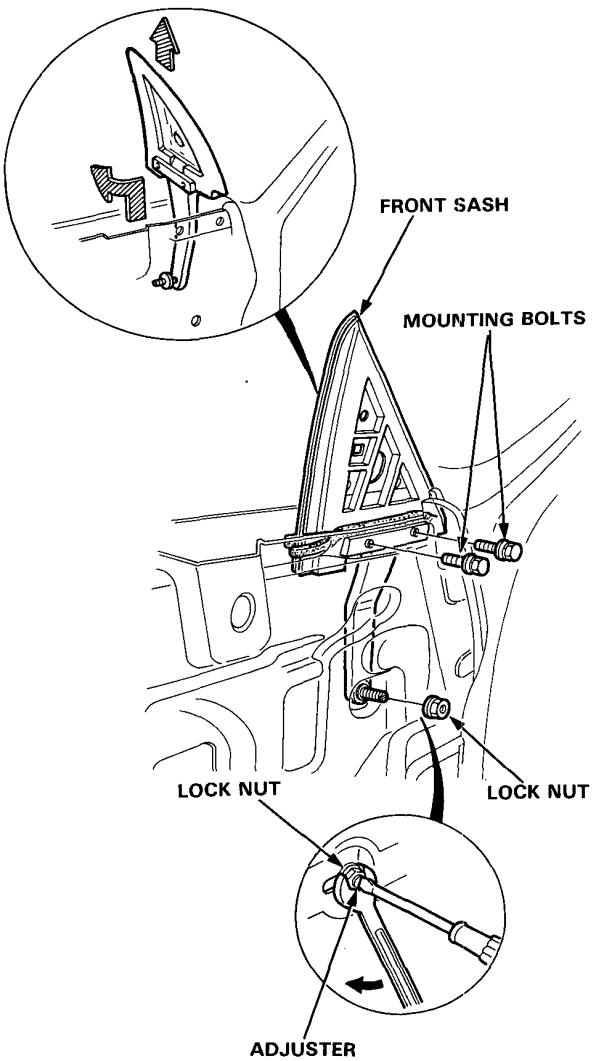

24. Carefully lower the window until you can see its mounting nuts, then loosen the nuts. Pull the window out through the window slot.

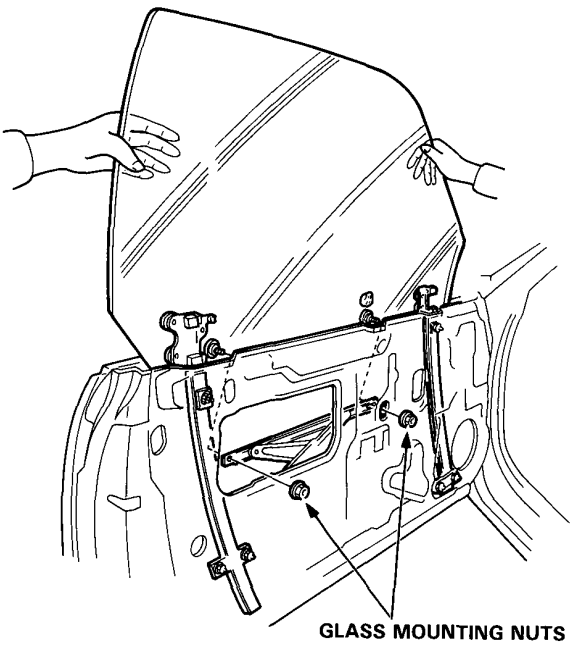

25. Remove the 7 mounting bolts and loosen the 2 motor bolts, then take out the regulator assembly through the center hole in the door.

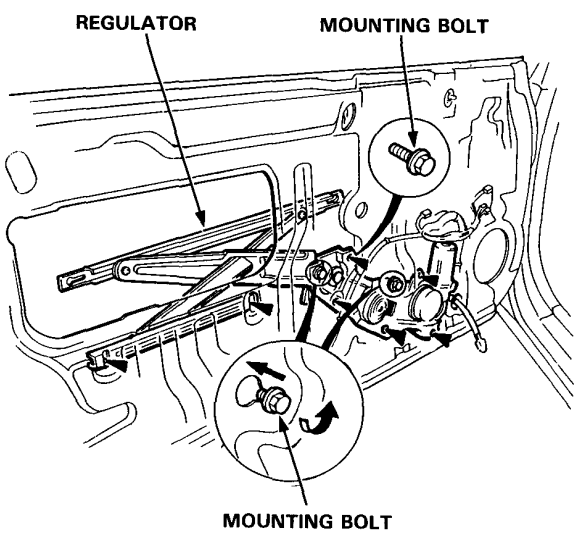

26. Remove the mounting nuts and adjuster lock nuts, then remove the front and rear glass guides.

NOTE:
- Hold the adjusters with a screwdriver when removing the lock nuts.
- Scribe a line across the upper mounting nuts and door to ensure original adjustment.

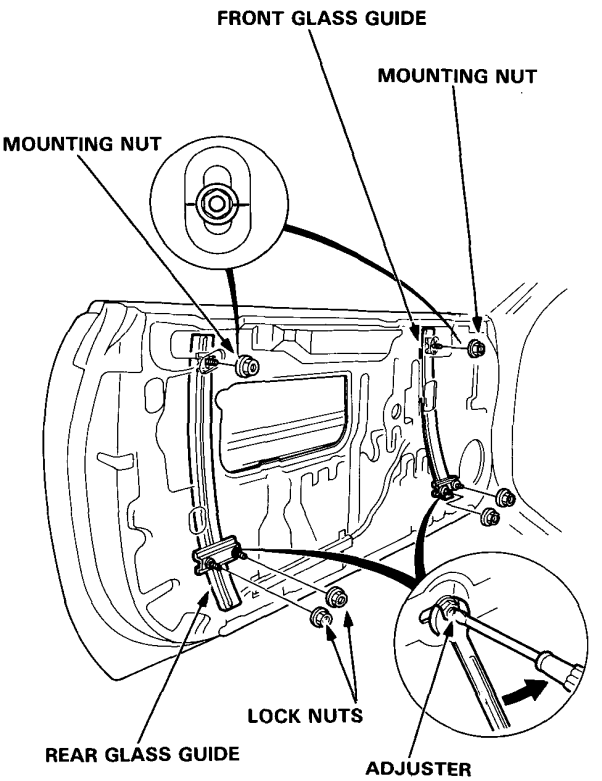

Assembly

Assemble the door in the reverse order of disassembly, and also:

1. Grease all the sliding surfaces of the window regulator where shown.

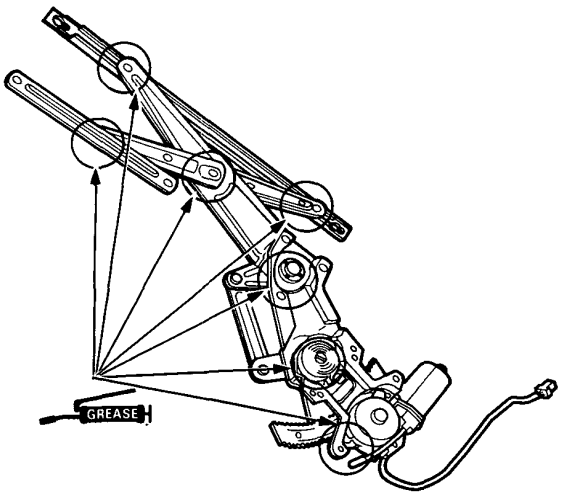

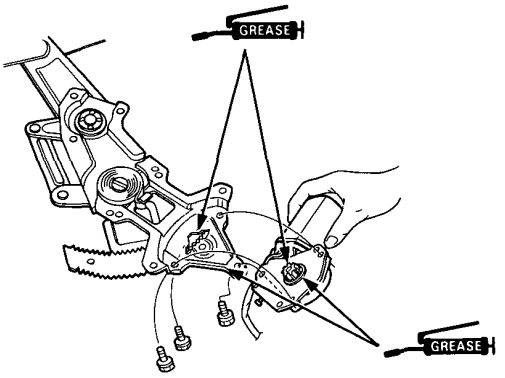

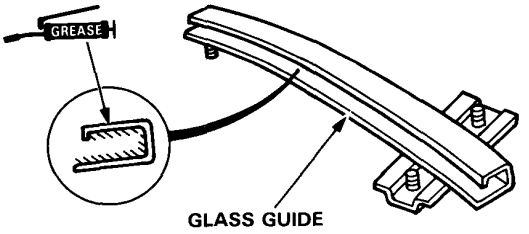

2. Roll the glass up and down to see if it moves freely without binding. Also make sure that there is no clearance between the glass and door upper weatherstrip when the glass is closed. Adjust the position of the door glass as necessary (pages 20-9 to 12).

3. Fix the wire harness correctly on the door.

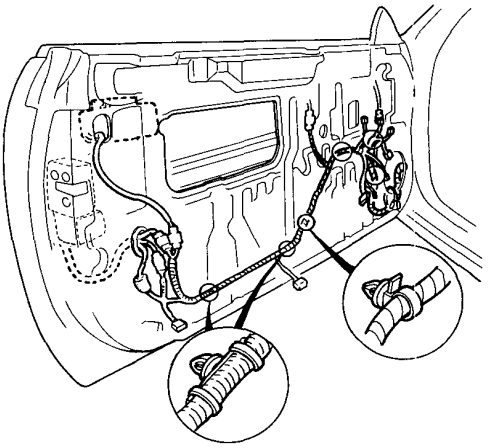

4. When reinstalling the plastic cover, apply adhesive along the edge where necessary to maintain a continuoius seal and prevent air/water leaks.

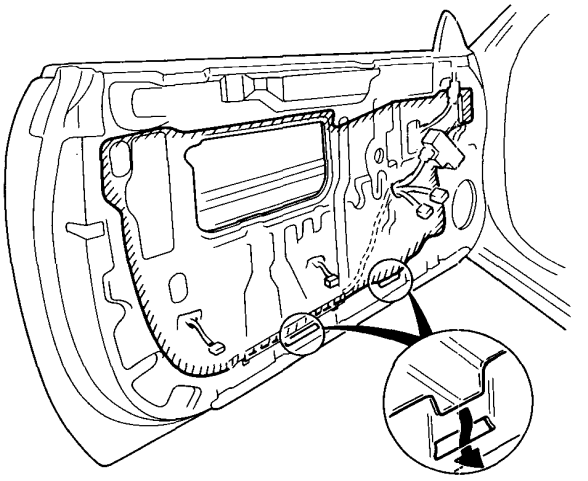

Glass Adjustment

① Inclination Adjustment (page 14-10)
② Forward/backward Adjustment (page 14-11)
③ Glass-to-Weatherstrip Seal Adjustment (page 14-11)
④ Front Sash Angle Adjustment (page 14-12)

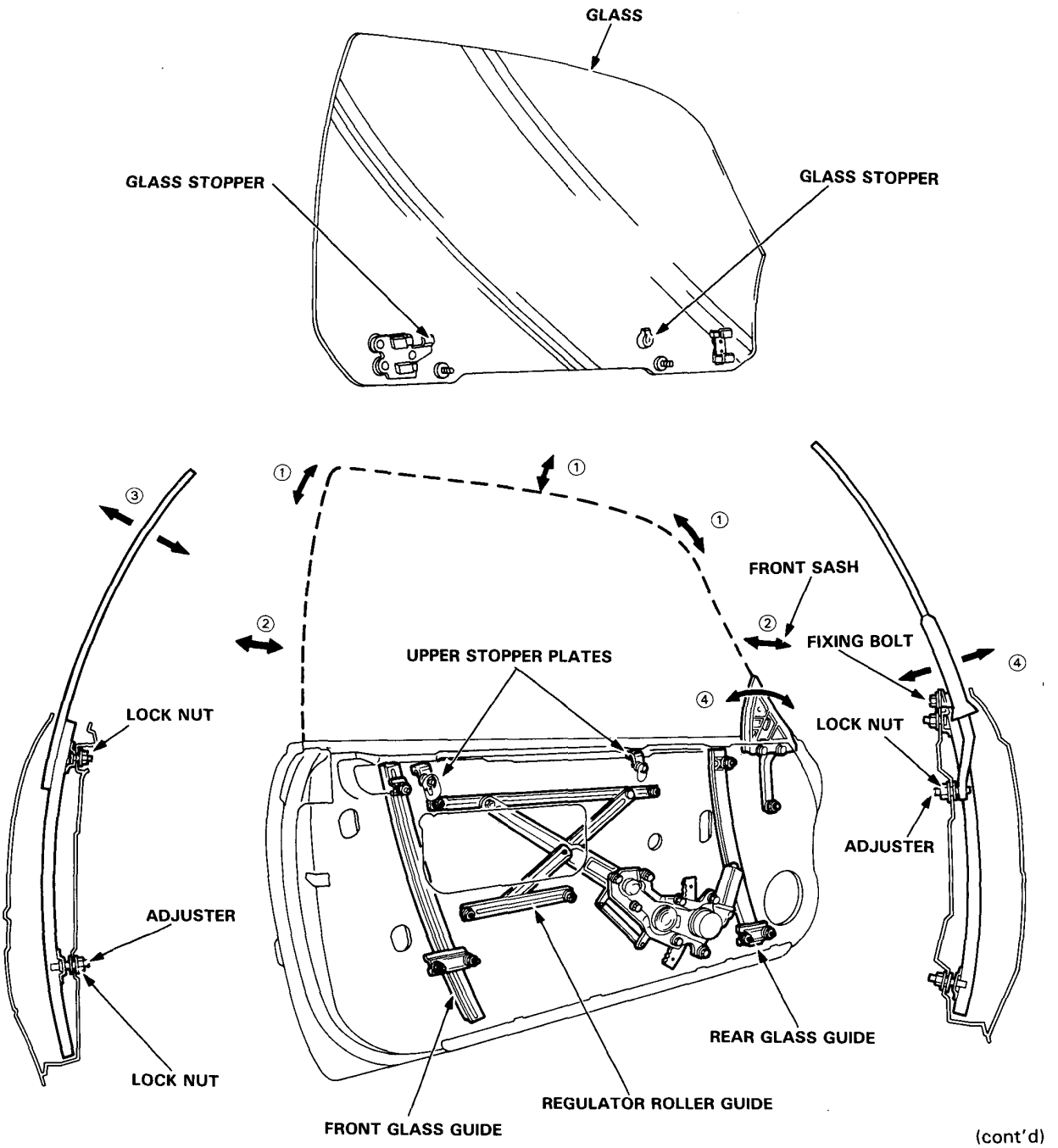

(cont'd)

Glass Adjustment (cont'd)

Inclination Adjustment

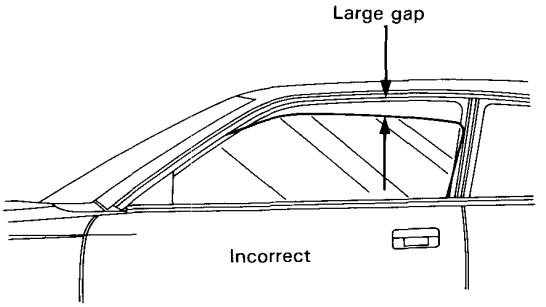

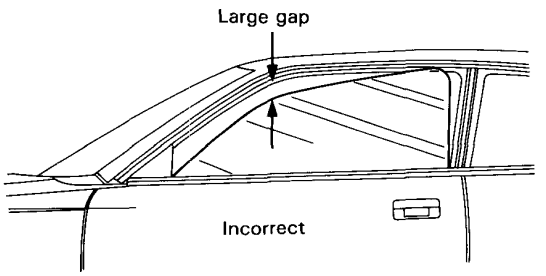

1. In this case move the roller guide up and down to arrange parallelism of the glass edge with the weatherstrip retainers on the front and center pillars as shown below.

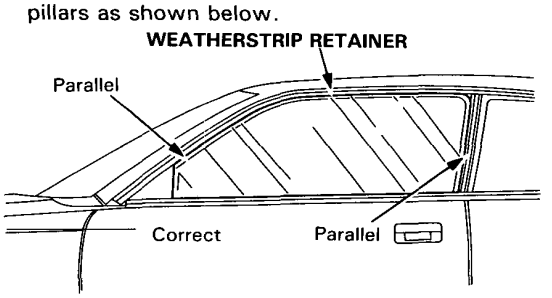

NOTE: Be sure to position the bolts of the roller guide to be parallel in the adjuster slots as shown.

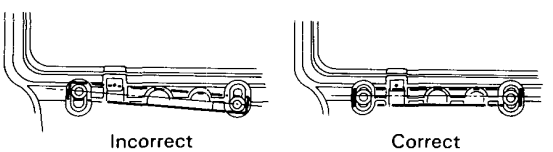

2. With the glass rolled up, if the two stopper plates do not equally contact the glass stoppers, loosen the stopper mounting nuts and eliminate gap to get equal contact. Then retighten the nuts.

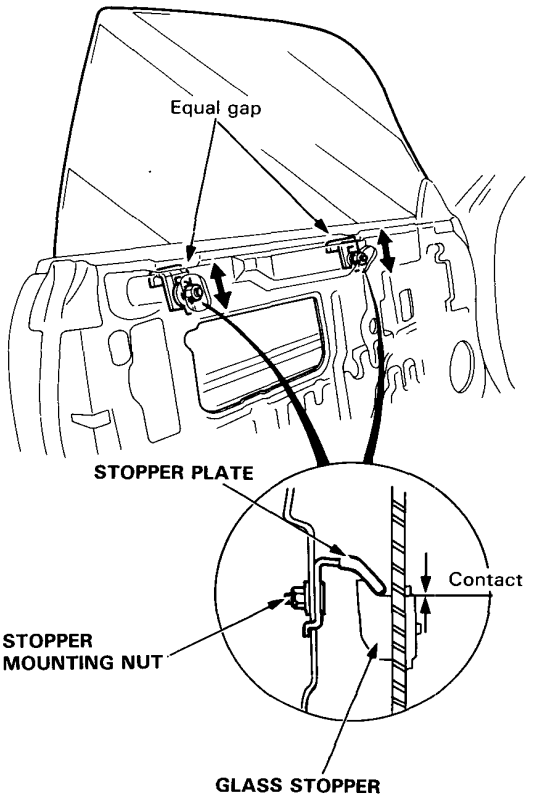

Forward/Backward Adjustment

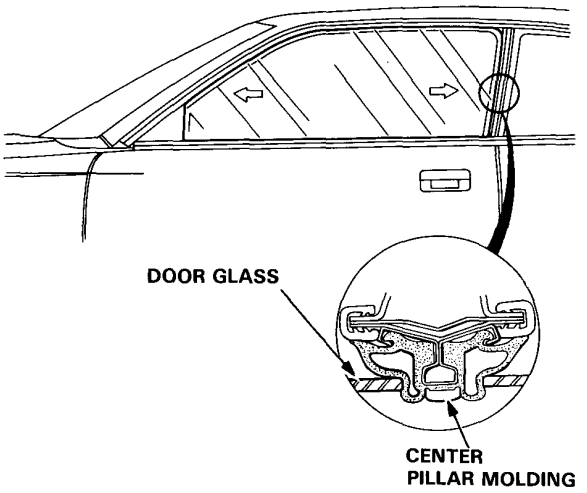

1. Hold the adjusters of the rear glass guide with a screwdriver, then loosen the upper and lower nuts of the door glass guide, and shift the glass to the front or rear.

   NOTE: The clearance between the rear edge of the glass and center pillar molding should be 8.5 mm (0.33 in.) with the glass closed fully.

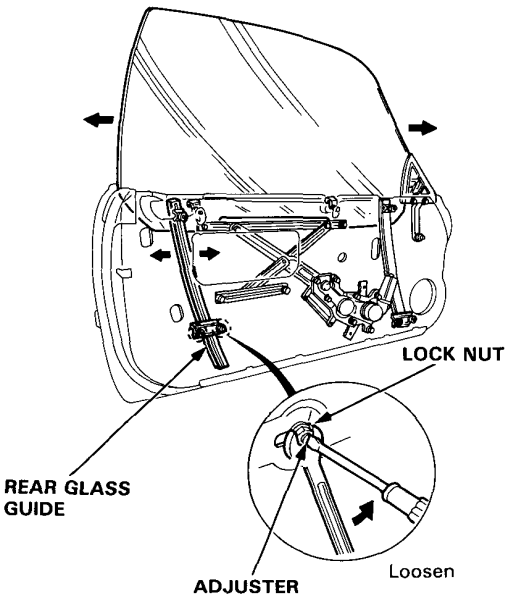

Glass-to-Weatherstrip Adjustment

1. Loosen the lower lock nut of the front and rear glass guides, and adjust by turning the adjusters to obtain the desired contact between the glass and weatherstrip.

	Turn Adjuster:	To move Top Edge of Glass:
Direction	Right	Out
	Left	in

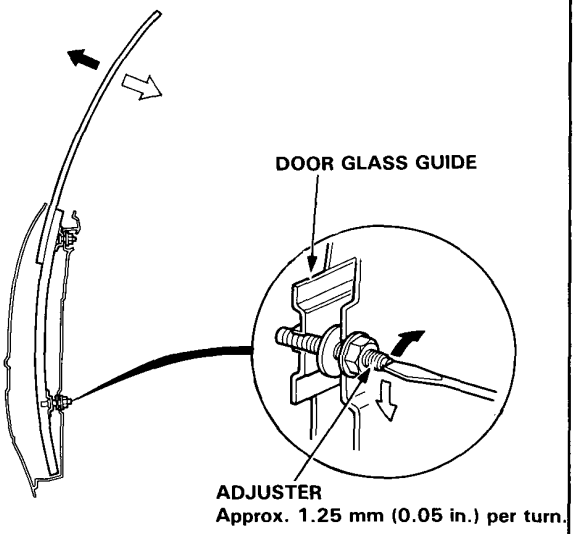

- Turn the 4 adjusters equally to prevent the door glass guide from slanting.

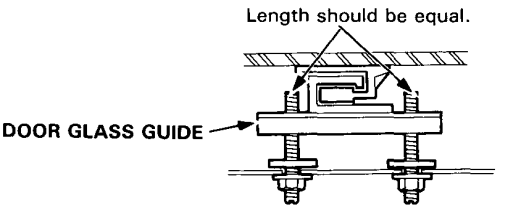

(cont'd)

Glass Adjustment (cont'd)

Front Sash Angle Adjustment

1. Loosen the lock nut of the front sash, and turn the adjuster so the front glass guide follows the contour of the glass.

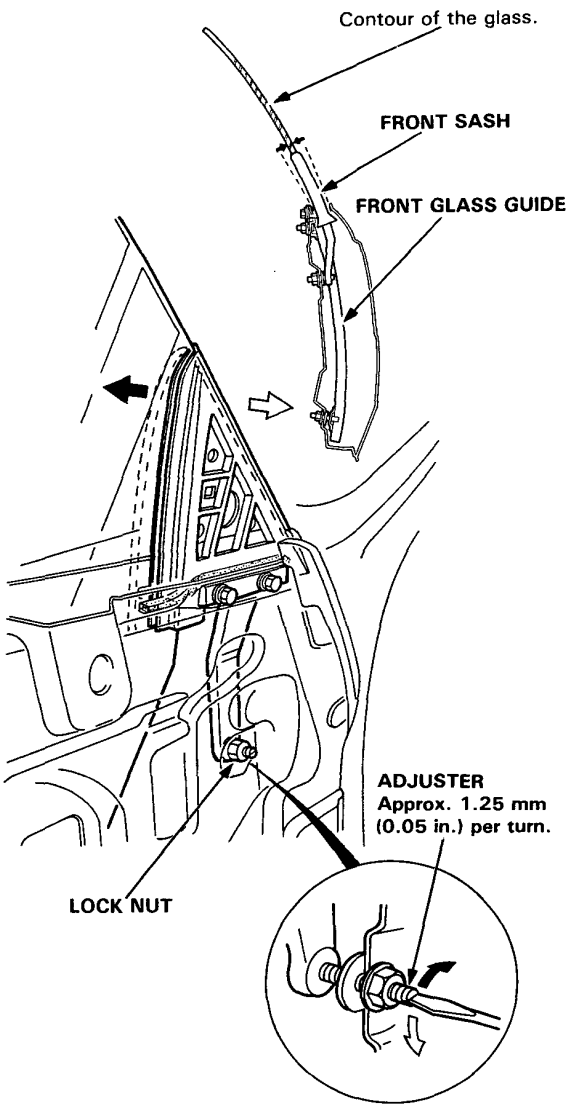

	Turn Adjuster:	To move Top Edge of Glass:
Direction	Right	Out
	Left	in

2. Hold the adjuster of the front sash with a screwdriver, then loosen the 2 upper bolts and the lock nut of the front sash, and make adjustment by shifting the front sash to the front or rear.

   NOTE: Check that the front sash and glass are in line with each other as shown.

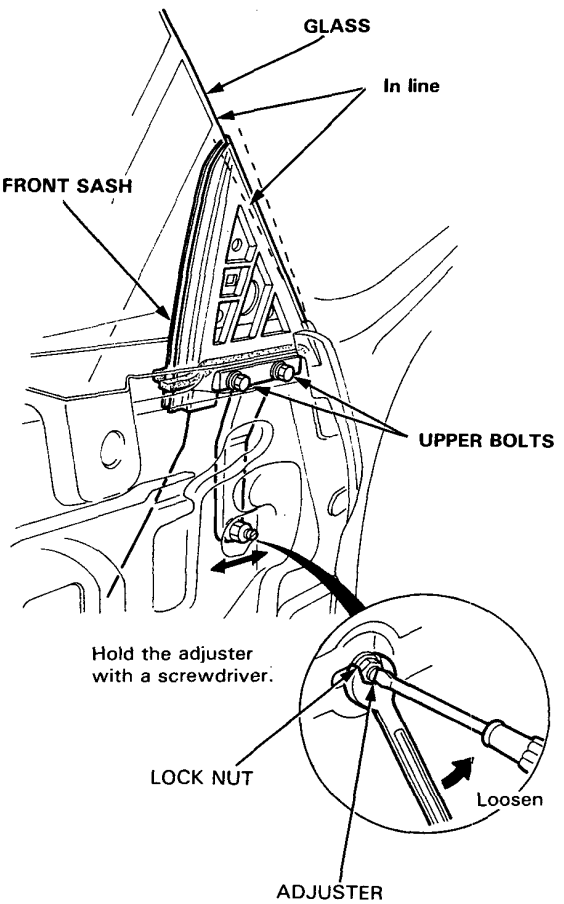

Door Position Adjustment

After installing the door, check for a flush fit with the body, then check for equal gap between the front and rear, and top and bottom door edges and the body.
The door and body edges should also be parallel. Adjust at the hinges as shown.

CAUTION: Place a rag or shop towel on the jack to prevent damage to the door when the hinge bolts are loosened for adjustment.

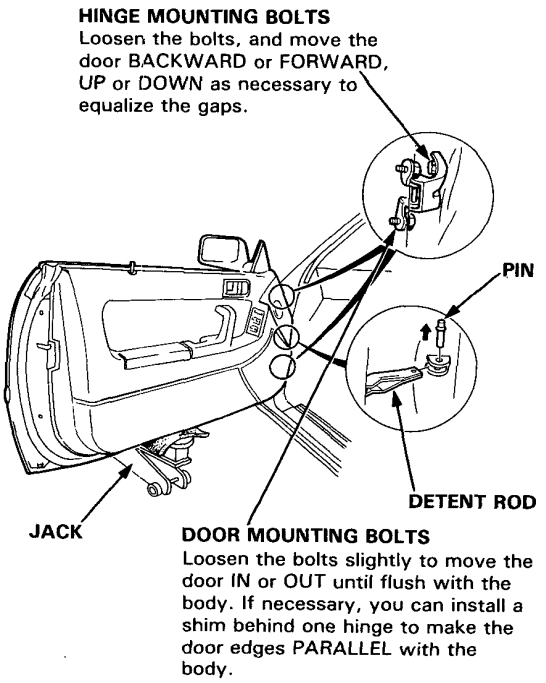

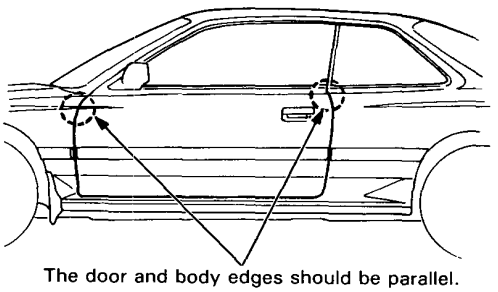

The door and body edges should be parallel.

Door Striker Adjustment

Make sure the door latches securely without slamming. If it needs adjustment:

1. Draw a line around the striker plate for reference.
2. Loosen the striker screws, and move the striker IN or OUT to make the latch fit tighter or looser. Move the striker UP or DOWN to align it with the latch opening. Then lightly tighten the screws and re-check.

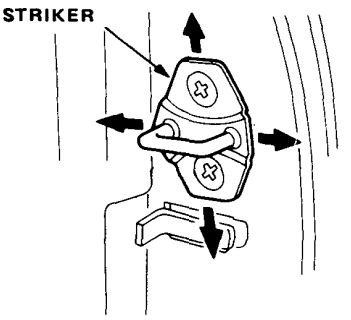

NOTE: Hold the outside handle out and push the door against the body to be sure the striker allows a flush fit.

3. If the door latches properly, tighten the screws and recheck.

Power Door Mirror

Removal

1. Remove the door panel and disconnect the power mirror wires.
2. Pry out the cap with a flat screwdriver and remove the screws, then remove the cover panel.
3. Remove the mirror mounting screws and nut while holding the mirror.

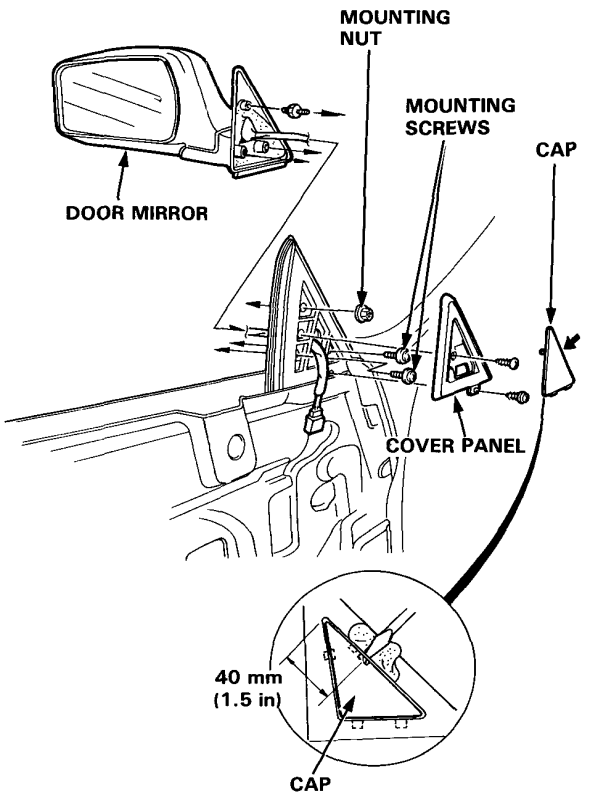

Mirror Glass Replacement

1. Heat the edge of the glass with a low powered heat gun for several minutes, then remove the glass.

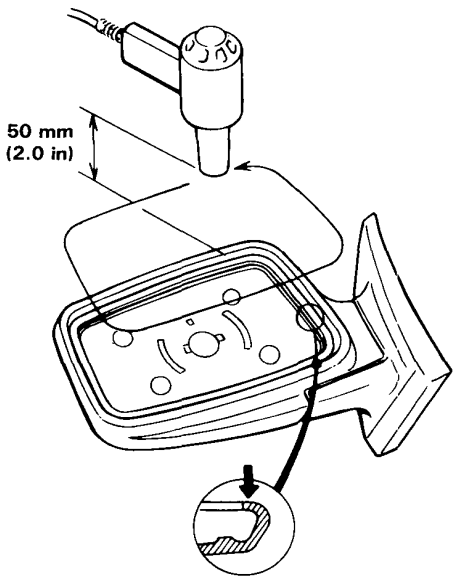

2. Install the glass in the mirror case, narrow end first.

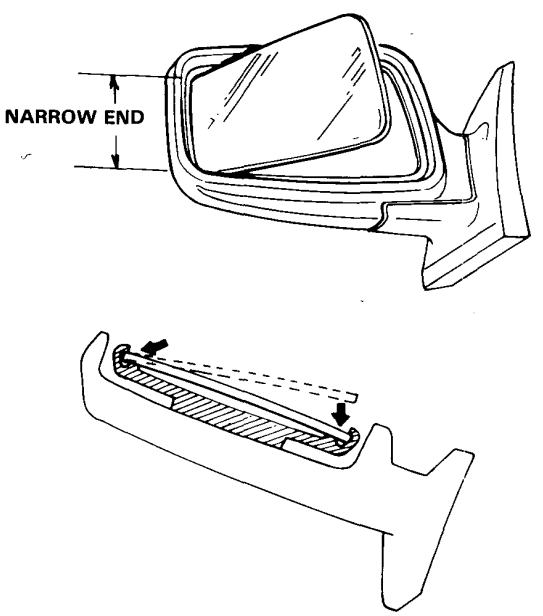

Index

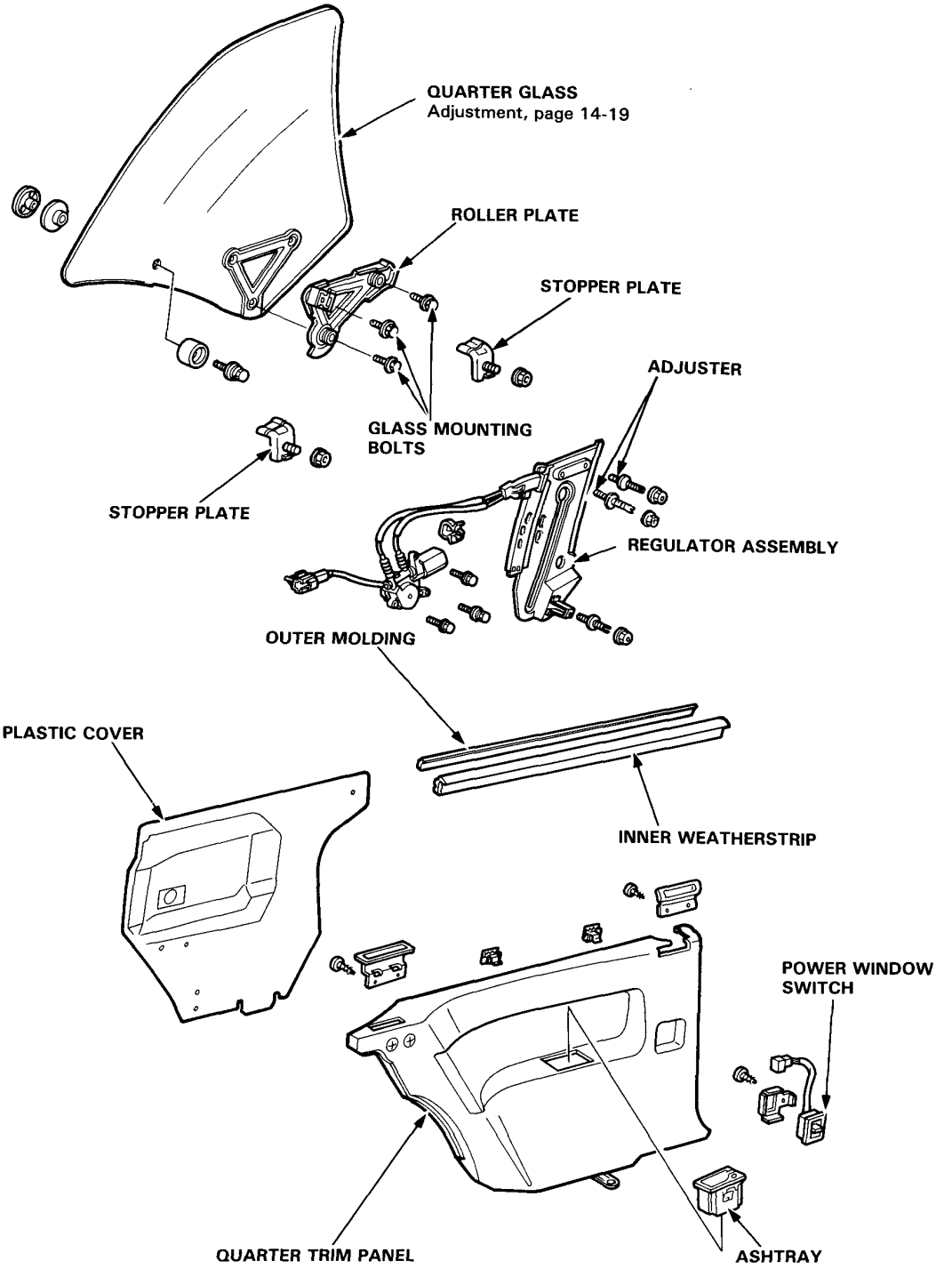
QUARTER GLASS
Adjustment, page 14-19
ROLLER PLATE
STOPPER PLATE
ADJUSTER
GLASS MOUNTING BOLTS
STOPPER PLATE
REGULATOR ASSEMBLY
OUTER MOLDING
PLASTIC COVER
INNER WEATHERSTRIP
POWER WINDOW SWITCH
QUARTER TRIM PANEL
ASHTRAY

Quarter Glass

Disassembly

1. Remove the rear seat
2. Open the glass fully.
3. Remove the inner weatherstrip by carefully prying with a long flat-tip screwdriver. Next remove the screws, then remove the quarter trim panel.

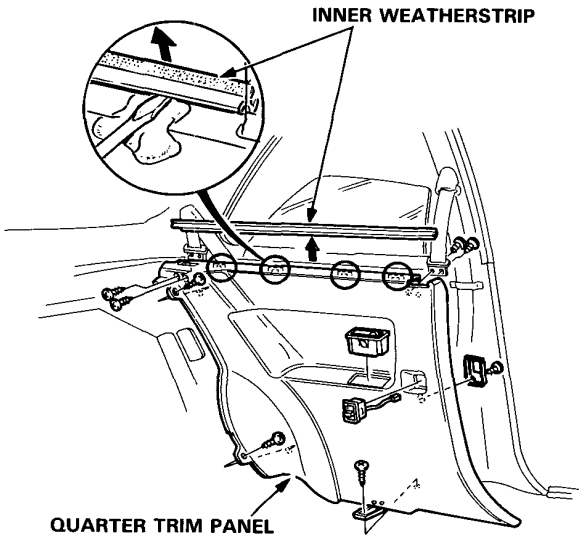

4. Use protective tape as shown to prevent scratching the paint.

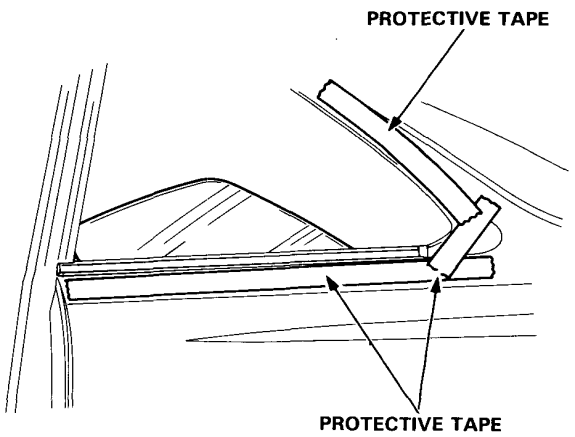

5. Carefully take off the plastic cover.
   NOTE: Be careful not to drop any foreign materials into the inside panel. Place shop towel on the inside panel as shown below.
6. Remove the nuts, then remove the stopper plates.
   NOTE: Scribe a line across the nuts and body to ensure original adjustment.

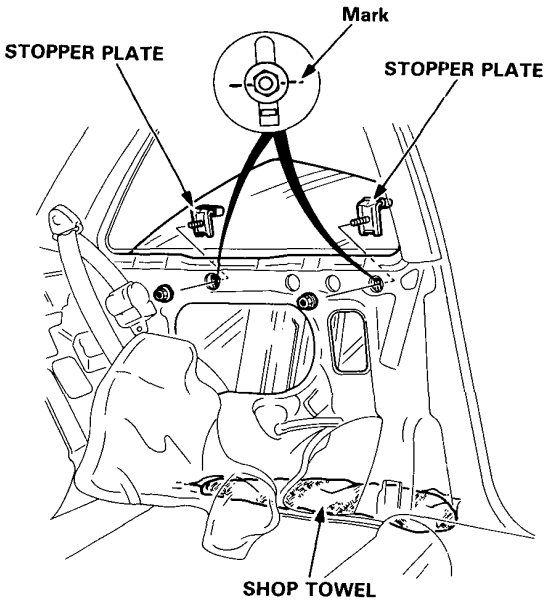

7. Remove the outer molding by prying with a long flat-tip screwdriver.

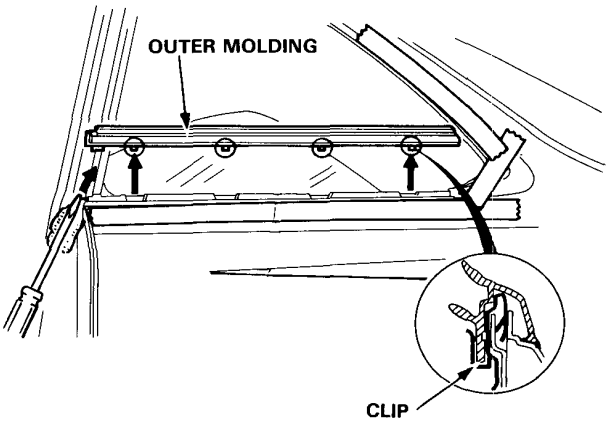

8. Re-connect the switch to operate the regulator.

9. Carefully roll up the quarter glass until you can see its mounting bolts.

10. Remove the 3 glass mounting bolts.

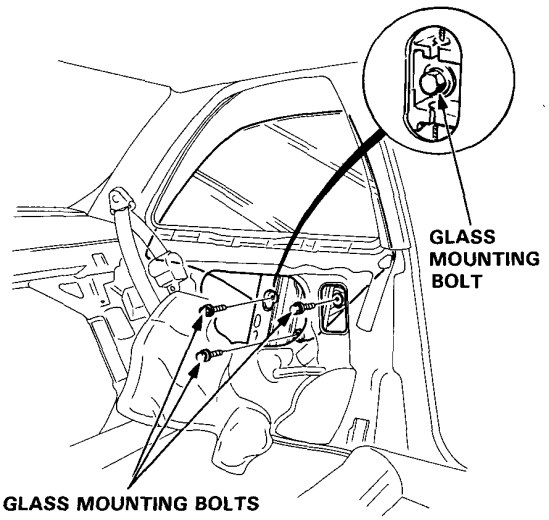

11. Raise the glass up and tape it to the body using heavy-duty adhesive tape.

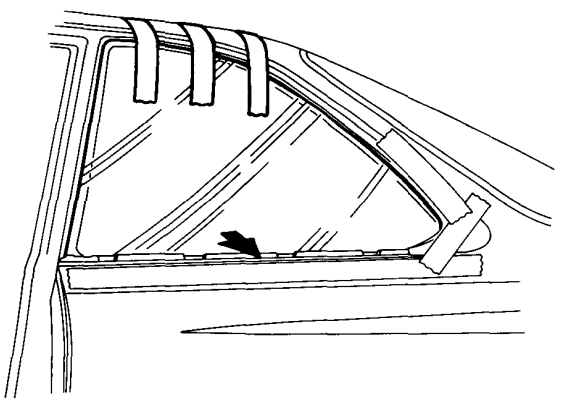

12. Loosen the upper adjuster lock nuts and remove the lower adjuster lock nut.

    NOTE: Counting the number of turns, screw the upper adjusters in until they bottom.

13. Remove the motor by loosening the 2 upper mounting bolts and removing the lower bolt.

14. Disconnect the motor wire, then take out the regulator assembly through the hole in the body.

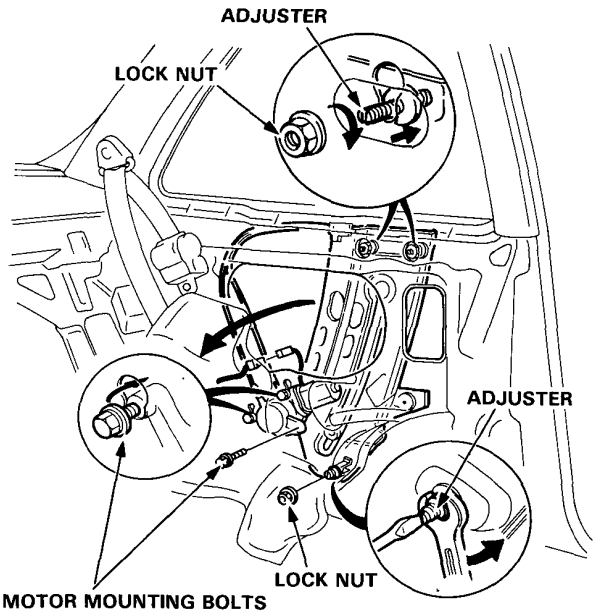

15. Stand next to the outside of the body, tilt the glass as shown, and pull it out through the quarter window opening.

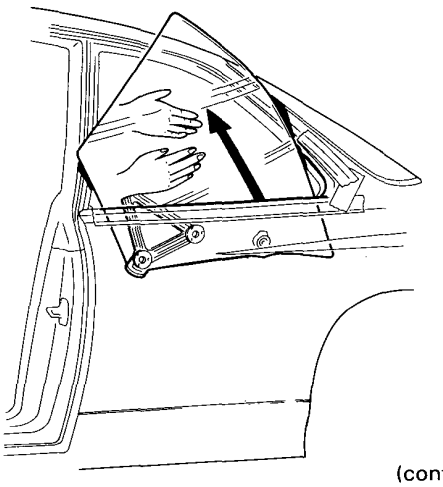

(cont'd)

Disassembly (cont'd)

16. Align the slider with the hole, then remove the cable end and cable guide.

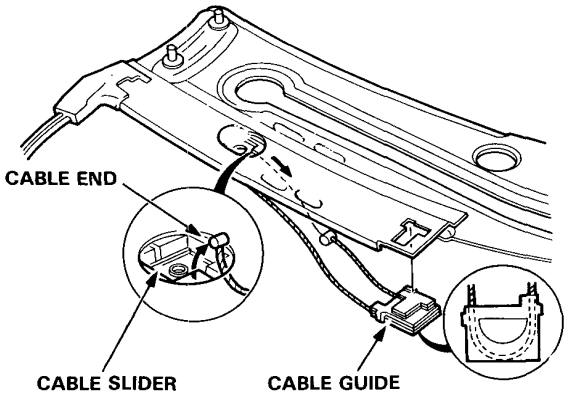

17. Remove the cable joint.

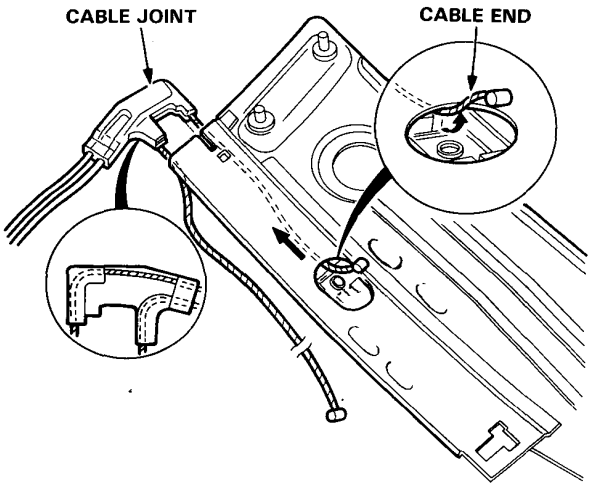

18. Slide the roller plate off the regulator.

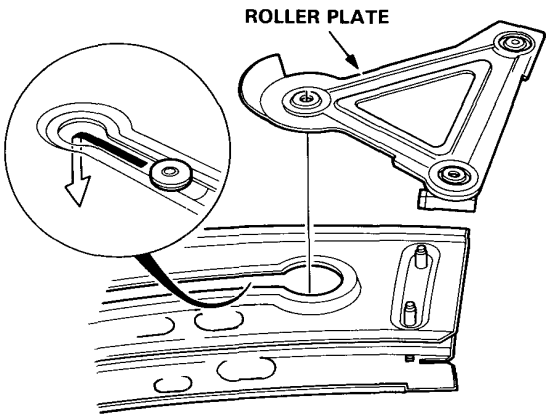

Assembly

Assemble the quarter glass and regulator in the reverse order of disassembly and:

1. Grease all the sliding surfaces of the regulator where shown.

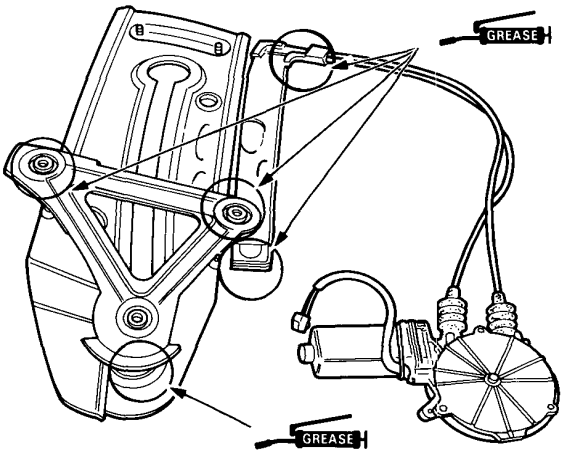

2. Insert the glass slowly into the quarter panel.

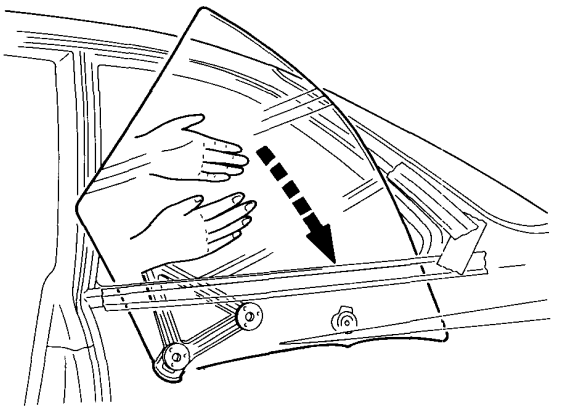

Disassembly (cont'd)

16. Align the slider with the hole, then remove the cable end and cable guide.

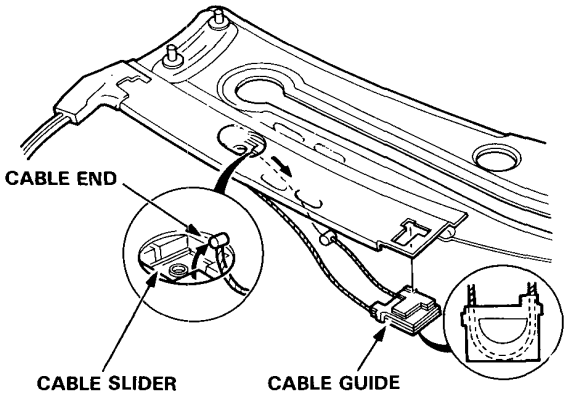

17. Remove the cable joint.

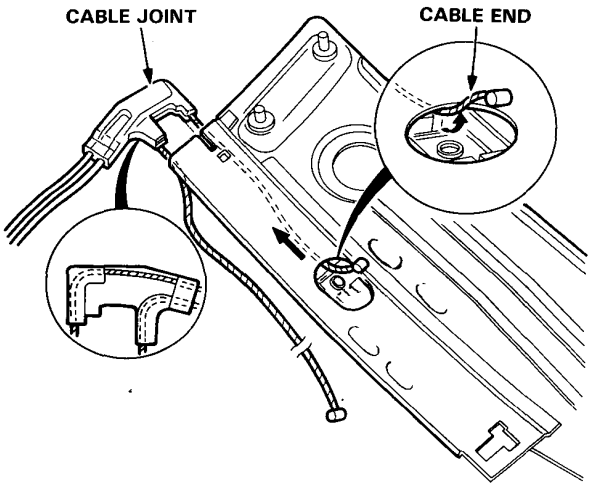

18. Slide the roller plate off the regulator.

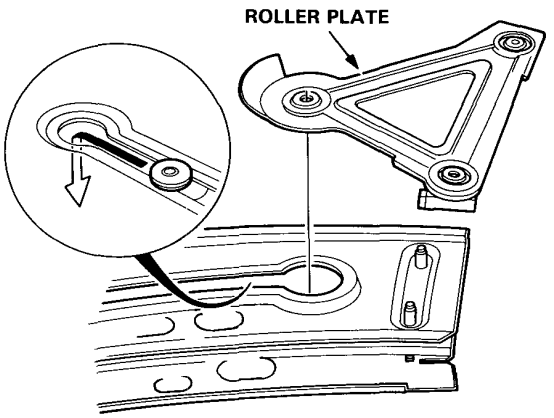

Assembly

Assemble the quarter glass and regulator in the reverse order of disassembly and:

1. Grease all the sliding surfaces of the regulator where shown.

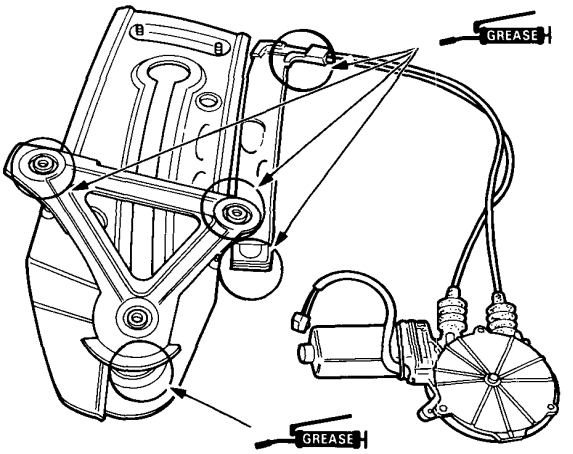

2. Insert the glass slowly into the quarter panel.

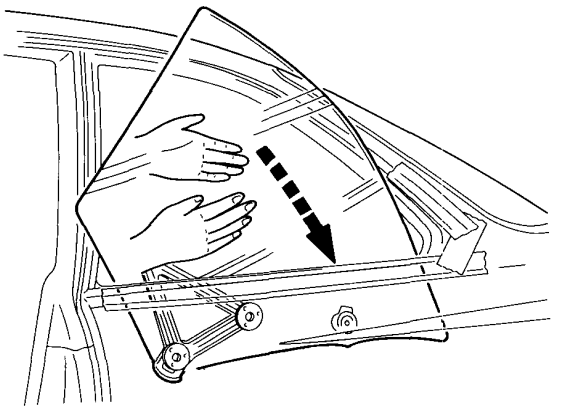

3. Suspend the glass in the fully closed position, using heavy-duty adhesive tape, or have an assistant hold the glass in place.

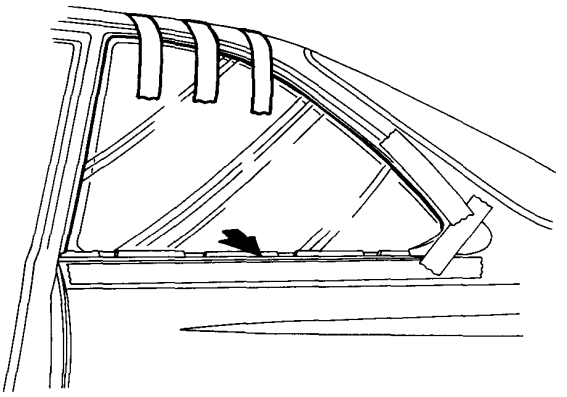

4. Carefully raise the roller plate until you can align the mounting holes with the glass setting holes.

5. Install the roller plate aligning it with the glass mounting holes. Tighten the 3 mounting bolts.

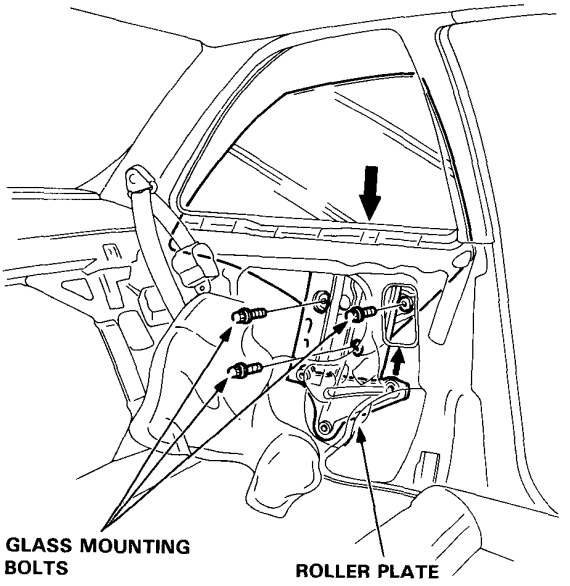

Glass Adjustment

1. Inclination Adjustment (page 14-20).

2. Glass-to-Weatherstrip Adjustment (page 14-21).

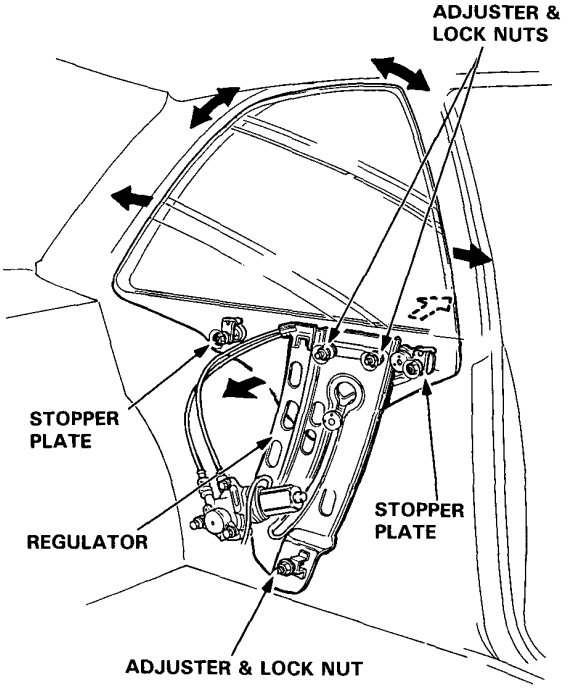

(cont'd)

3. Suspend the glass in the fully closed position, using heavy-duty adhesive tape, or have an assistant hold the glass in place.

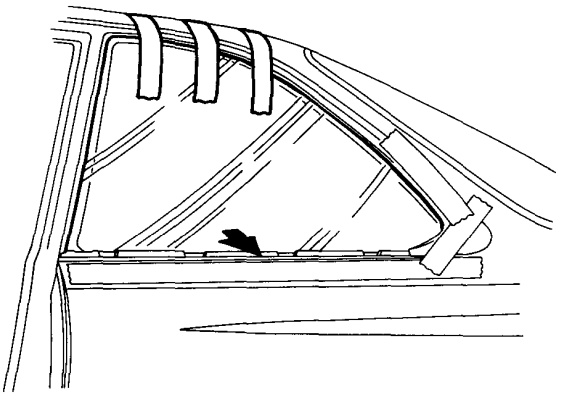

4. Carefully raise the roller plate until you can align the mounting holes with the glass setting holes.

5. Install the roller plate aligning it with the glass mounting holes. Tighten the 3 mounting bolts.

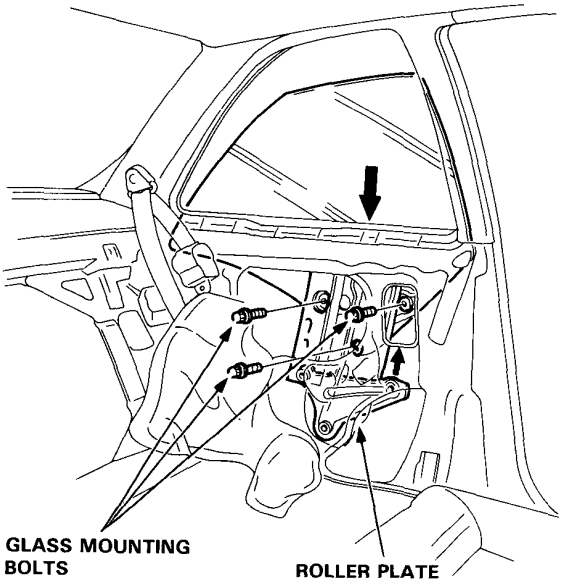

Glass Adjustment

1. Inclination Adjustment (page 14-20).

2. Glass-to-Weatherstrip Adjustment (page 14-21).

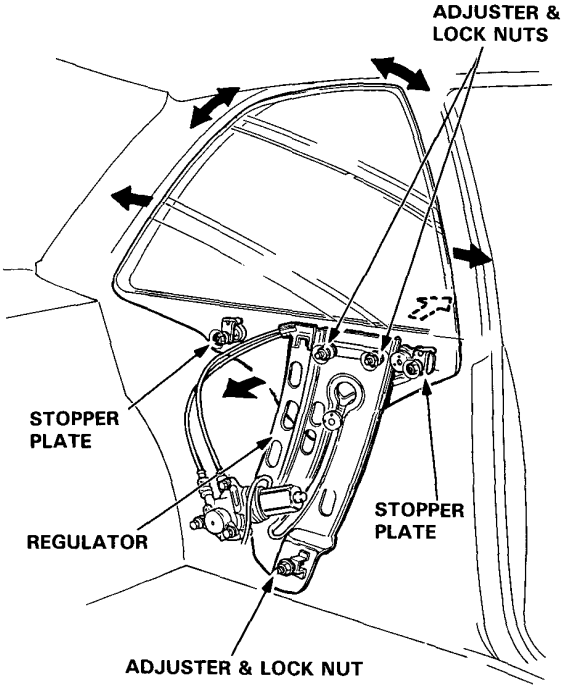

(cont'd)

Inclination Adjustment

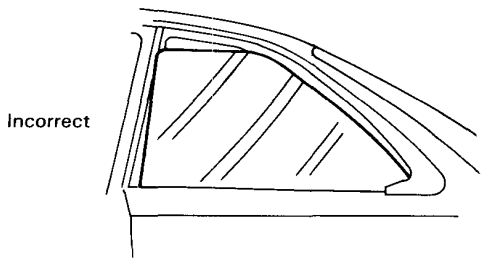

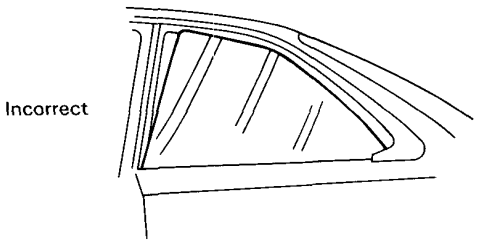

1. In this case move the regulator assembly parallel or vertically to arrange parallelism of the glass edge with the weatherstrip retainers on the center pillars and quarter molding as shown below.

   NOTE: Hold the adjuster with a screwdriver when removing the lock nut.

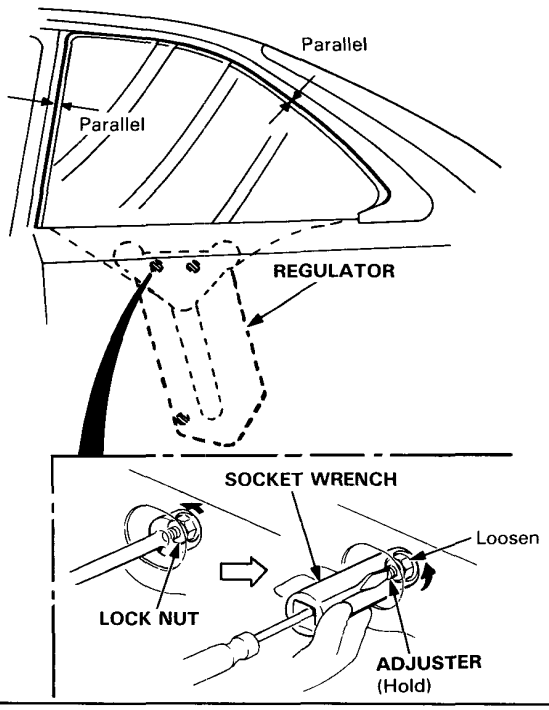

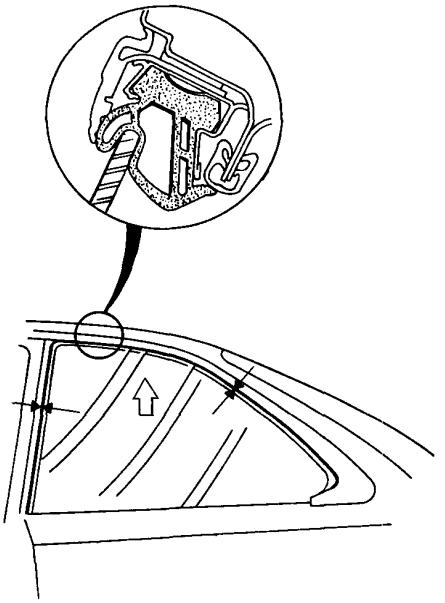

2. With the glass rolled up, if the two upper stoppers do not equally contact the glass stoppers, loosen the upper stopper mounting nuts and eliminate the gap to get equal contact. Then retighten the nuts.

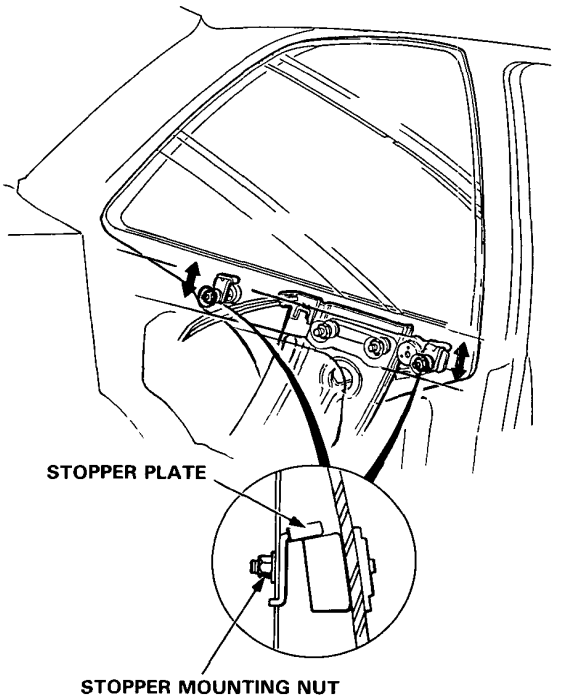

Glass-to-Weatherstrip Adjustment.

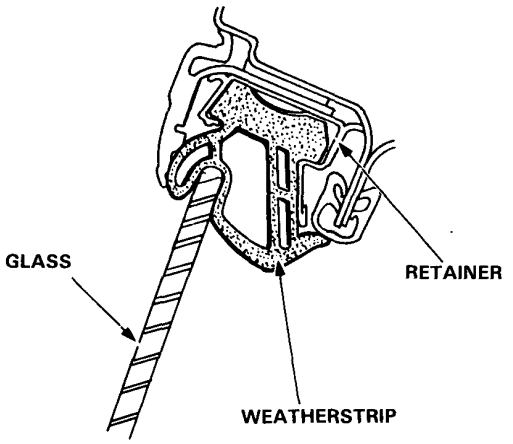

1. Loosen the lower lock nut of the regulator and adjust by turning the adjuster to obtain the desired contact between the glass and weatherstrip.

	Turn Adjuster:	To move Top Edge of Glass:
Direction	Right	Out
	Left	In

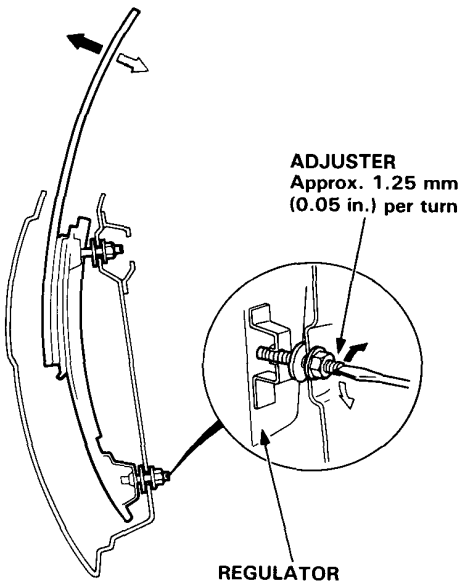

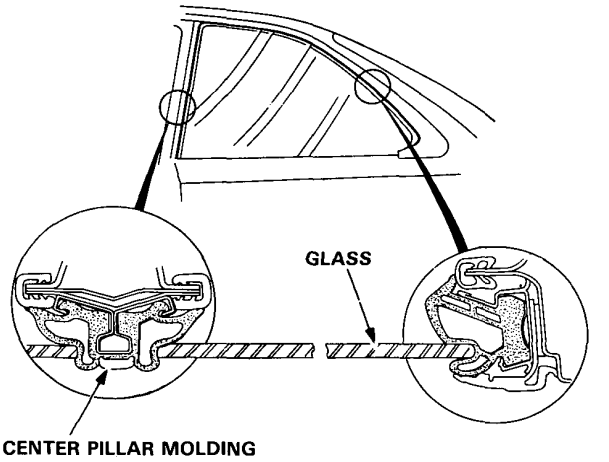

2. Loosen the upper lock nuts of the regulator and adjust by turning the adjusters to obtain the correct glass position.

			Turn Adjuster:	To move Top Edge of Glass:	
				Front	Rear
Direction	Front*	①	Right	In	Out
		②	Left	Out	In
	Rear*	③	Right	Out	In
		④	Left	In	Out

* Front: From center pillar molding to glass edge.
Rear: From quarter molding to glass edge.

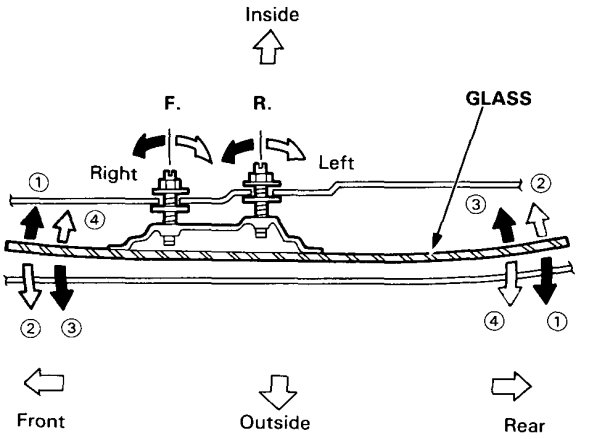

Windshield, Rear Window Glass

Index

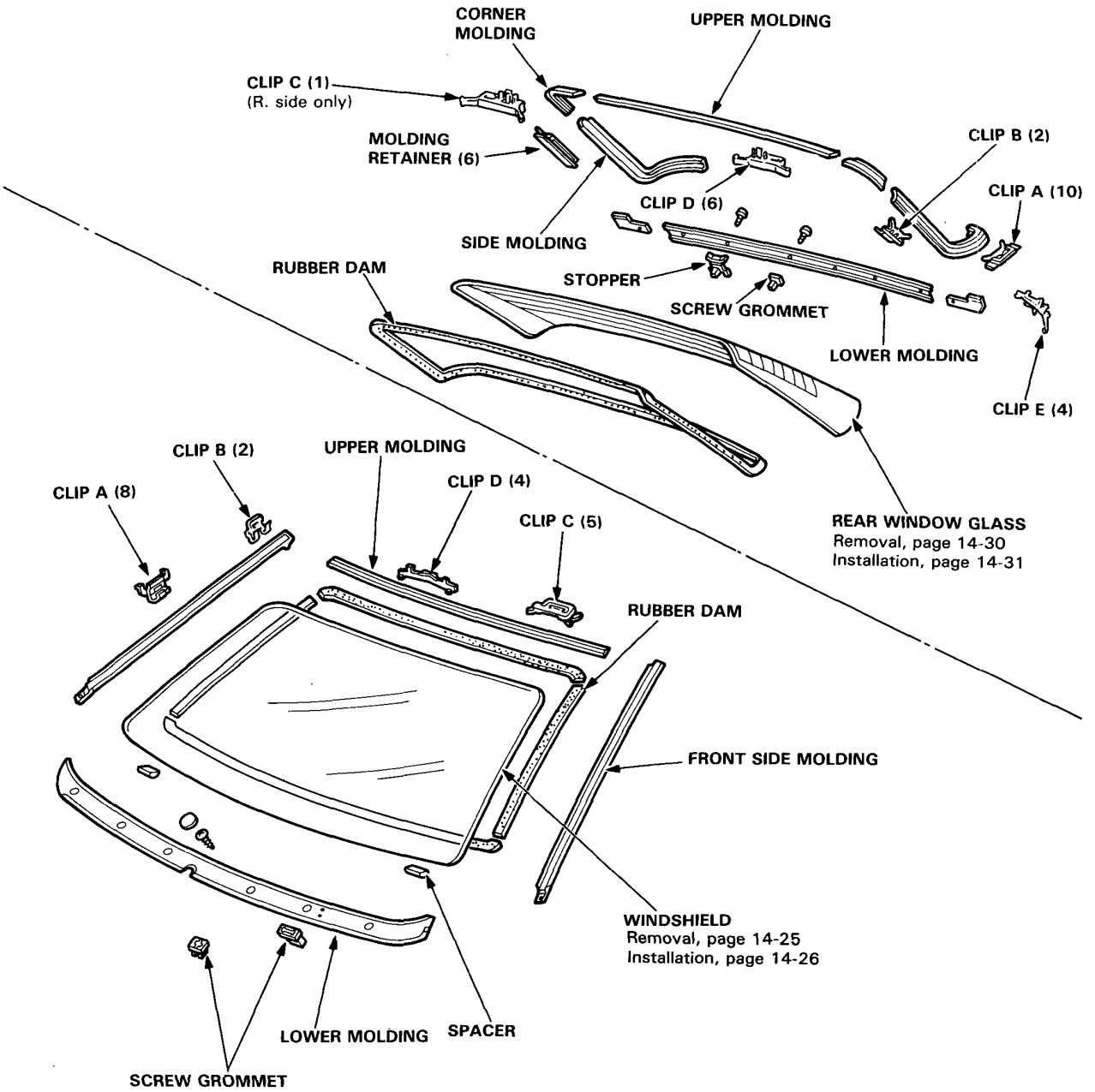

( ): Quantity of part used.

Installation

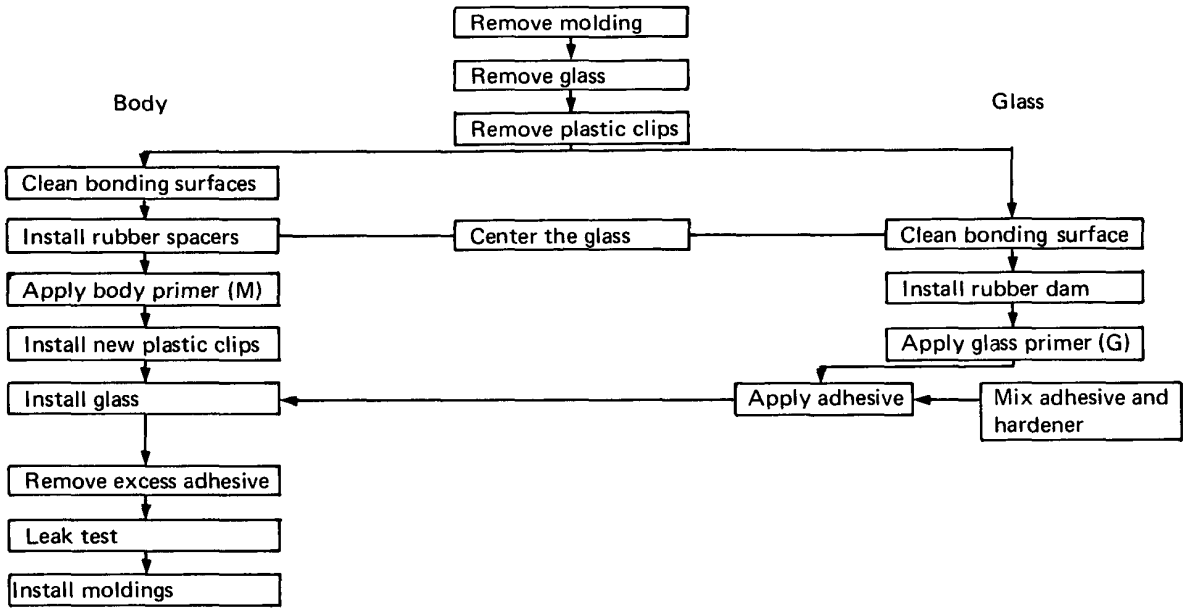

Parts

Part Number	Contents	Comment
Adhesive kit — Low temperature 08718–99960, High temperature 08718–99961	Adhesive sealant (500 g)	
	Hardener (75 g)	
	Glass primer G (20 g)	
	Body primer M (20 g)	
	Piano wire (0.6ϕ x 1 m (3f))	
	Gauze	
	Cartridge	For glass primer (G)
	Sponge	For applying primers

Tools

Tool/Material	Remarks
Glass or steel plate	To mix adhesive and hardener on
Putty knife	To mix adhesive and remove excess
Caulking gun	To apply bead of adhesive to windshield.
Suction cups	To install windshield
Knife	To scrape bonding surface around window opening
Awl	To make hole through existing adhesive for piano wire
Two wood sticks	To hold piano wire
Toluene or alcohol	To clean bonding surfaces

Windshield, Rear Window Glass

Workable Time

Adhesive workable time varies widely according to temperature, so choose the correct adhesive kit for the temperature range you will be working in.
After mixing and applying adhesive, you should install the windshield within the time shown on the chart.

For example, when the ambient temperature is 25°C (77°F), the glass should be installed within 45 minutes using the high temperature type adhesive.
Kit part numbers and contents are listed on the page before.

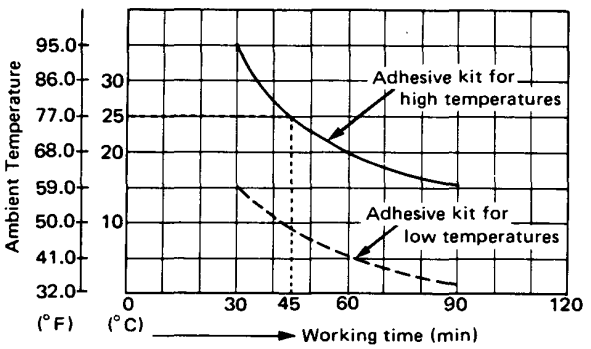

Notes

- Both kits have two types of adhesive primer: one for the body (metal), and one for glass.
- Always use new genuine Honda adhesive, or equivalent.
- Do not use the adhesive if 6 months have elapsed since date of manufacture.
- Store adhesive in a cool, dry place.
- Open only immediately before you are going to use it.

Hardening Time

Hardening time can be shortened by heating with infrared light.

For example, the adhesive will start to harden within 270 minutes mixing at 20°C (63°F). If however, it is heated to 35°C (95°F), it will start to harden within 90 minutes.

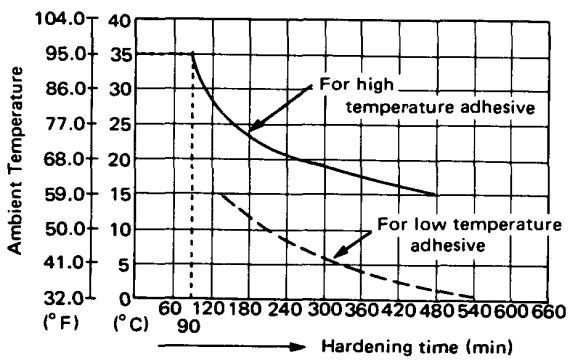

Broken Glass Removal

Remove as much broken glass as possible with a vacuum cleaner.
Blow out the glass in the heater and behind the dashboard with low pressure compressed air:

WARNING Wear eye protection while using the air gun.

(1) Set the temperature control dial to COLD.

(2) Push the HEAT button on the function pawel.

(3) Make sure the recirculation button is OFF.

(4) Blow compressed air through the defroster center vent outlet.

(5) Remove the blower duct, and remove any glass from the air mix chamber.

(6) Remove the any glass from the top of the vent/defrost door.

(7) Remove any glass from top and bottom of carpet and seats with a vacuum cleaner.

NOTE: It is recommended to remove the seats to shake off any glass (page 14-44).

Removal

1. To remove the windshield, first remove the:
   - Front map light
   - Rearview mirror (page 14-51).
   - Sun visors and holders.
   - Front pillar trim (page 14-42).
   - Front wiper and air scoop.
   - Lower molding.

2. Remove the front side molding.

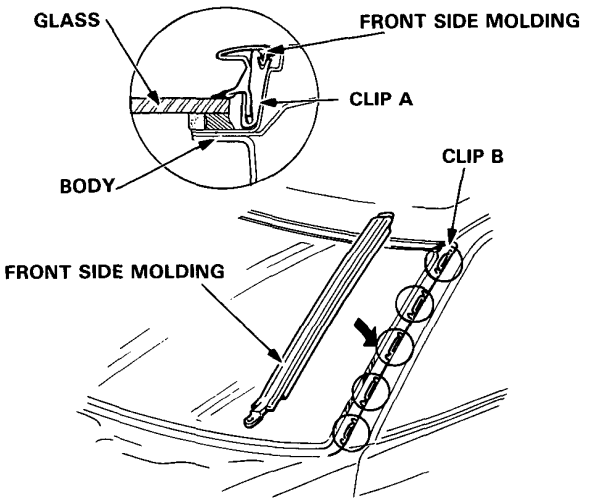

NOTE: You will need a molding clip release tool to remove some moldings. If necessary, make one that has the dimensions shown.

Molding Clip Release Tool

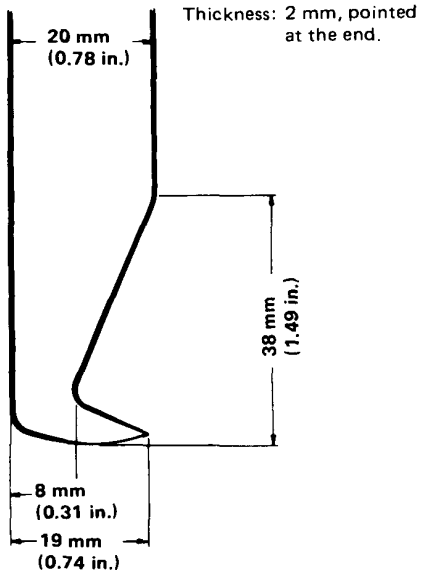

3. Raise the upper molding slightly away from the windshield at the locations where the molding clips are used, then fit the end of the molding clip release tool at each clip, and pull it toward you until the clip is clear of the molding.

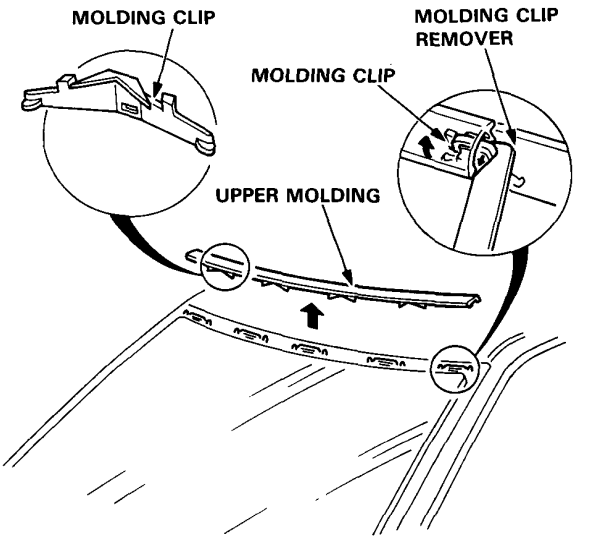

4. Lower the front of the headliner.

   NOTE: Take care not to bend the headliner excessively.

5. Apply protective tape along the edge of the dashboard and body next to the glass as shown.

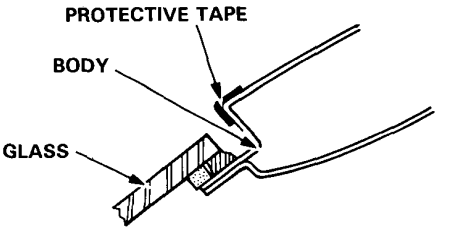

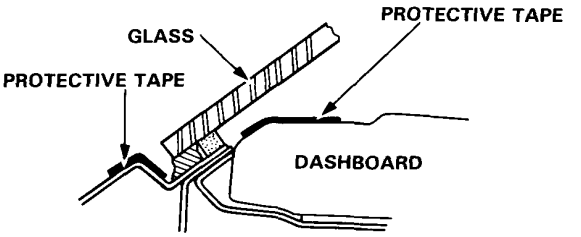

(cont'd)

Removal (cont'd)

6. Using an awl, make a hole through the adhesive from inside the car. Push piano wire through the hole and wrap each end around a piece of wood.

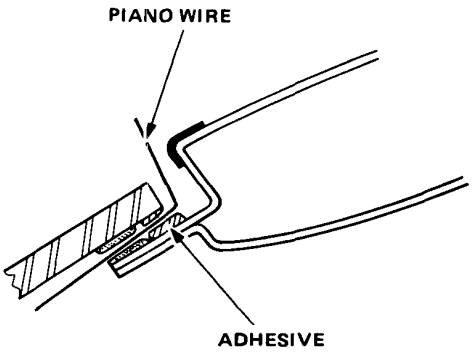

7. With a helper on the outside, pull the wire back and forth in a sawing motion and carefully cut through the adhesive around the entire glass.

   CAUTION: Hold the piano wire as close to the glass as possible to prevent damage to the body and dashboard.

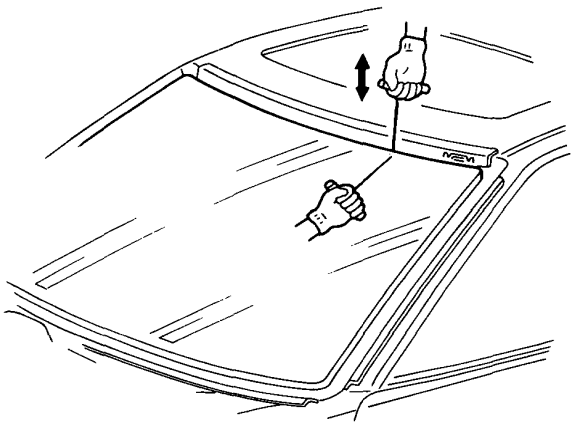

8. Remove the molding clips and the rubber dam.

Installation

1. Scrape the old adhesive smooth with a knife, to a thickness of about 2 mm (0.08 in.) on the bonding surface around the entire glass flange.

   NOTE:
   - Do not scrape down to the painted surface of the body; damaged paint will interfere with proper bonding.
   - Remove all traces of the rubber spacer material from the body.
   - Mask off surrounding surfaces before applying primer.

2. Clean the body bonding surface with a sponge dampened in alcohol.

   NOTE: After cleaning, keep oil, grease or water from getting on the surface.

3. Install the molding clips as shown.

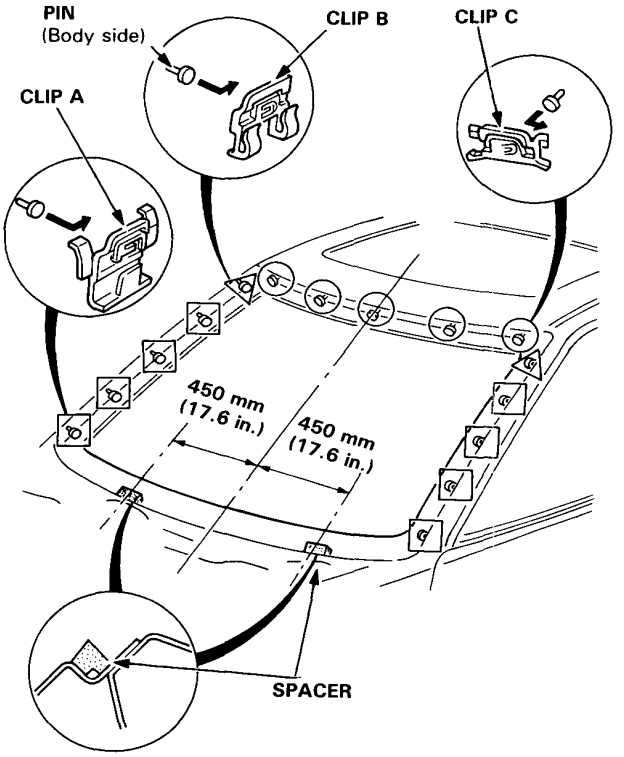

4. Peel the backing off each spacer, then install the spacers by pressing them firmly into place at the locations shown.

5. If the glass is to be reinstalled, use a putty knife to scrape off all traces of old adhesive, then clean the glass surface with alcohol to a width of about 20 mm.

NOTE: Make sure the bonding surface is kept free of water, oil and grease.

CAUTION: Avoid setting the glass on its edges; small chips may later develop into cracks.

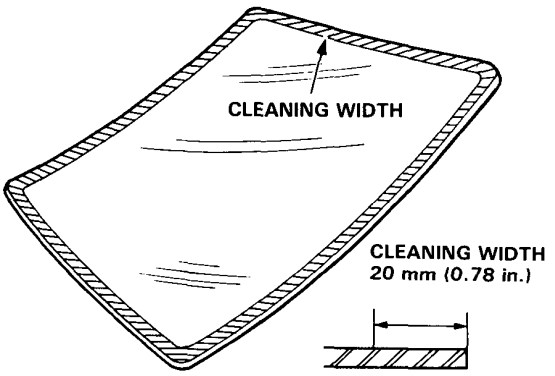

6. Set the glass upright on the spacers, and center it in the opening. Mark the location by marking lines across the glass and body with a grease pencil at the four points shown.

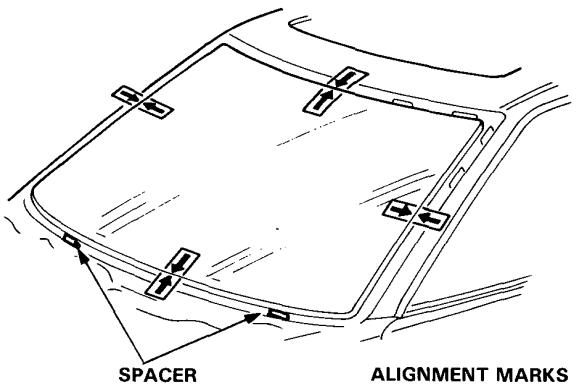

7. Glue the rubber dam to the inside face of the windshield as shown, to contain the adhesive during installation.

NOTE:
- Be careful not to touch the glass where adhesive will be applied.
- Mask off surrounding surfaces before applying primer.

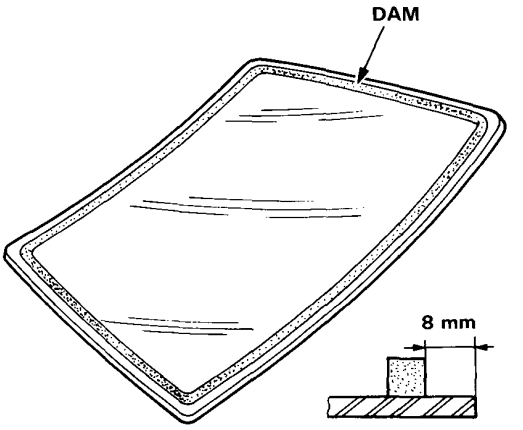

8. With a sponge, apply a light coat of glass primer around the edge of the glass, then lightly wipe it off with gauze or cheesecloth.

NOTE:
- Do not apply body primer to the glass, and do not get body and glass primer sponges mixed up.
- Never touch the primed surfaces with your hands. If you do, the adhesive may not bond to the glass properly, causing a leak after the glass is installed.
- Keep water, dust, and abrasive materials away from the primed surface.

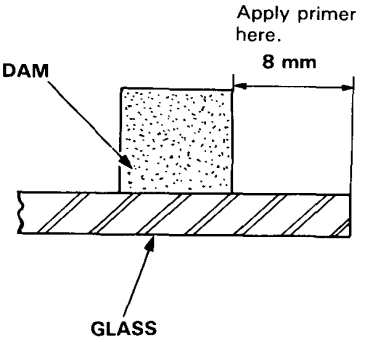

(cont'd)

Installation (con'd)

9. With a sponge, apply a light coat of body primer to the original adhesive remaining around the window opening flange.

   NOTE:
   - Do not apply glass primer to the body, and be careful not to mix up glass and body primer sponges.
   - Never touch the primed surfaces with your hands.
   - Mask off the dashboard before painting the flange.

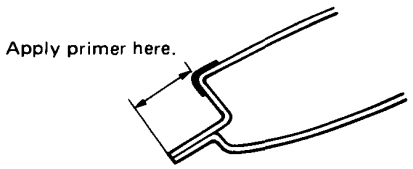

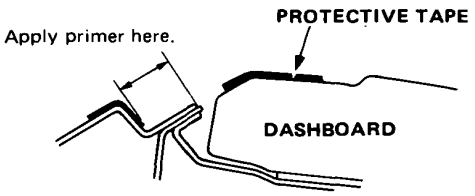

10. Thoroughly mix the adhesive and hardener together on a glass or metal plate.

    NOTE:
    - Clean the plate with a sponge and alcohol before mixing.
    - Follow the instructions that came with the adhesive.

11. Before filling a cartridge, cut off the end of the nozzle at the angle shown.

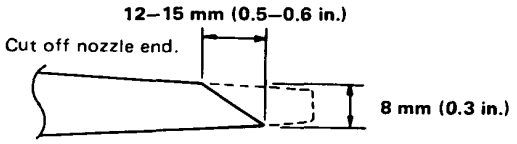

12. Pack adhesive into the cartridge without air pockets, to ensure continuous delivery. Put the cartridge in a caulking gun, and run a bead of adhesive around the edge of the glass as shown.

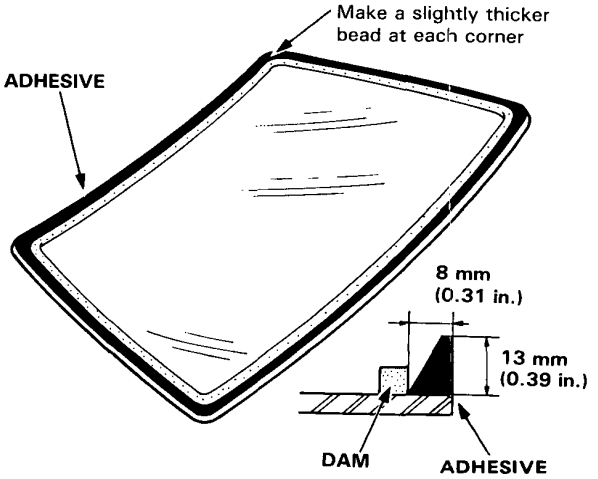

13. Use suction cups to hold the glass over the opening, align it with the marks made in step 6 and set it down on the adhesive. Lightly push on the glass until its edge is fully seated on the adhesive all the way around.

    NOTE: Do not open or close the doors until the adhesive is dry.

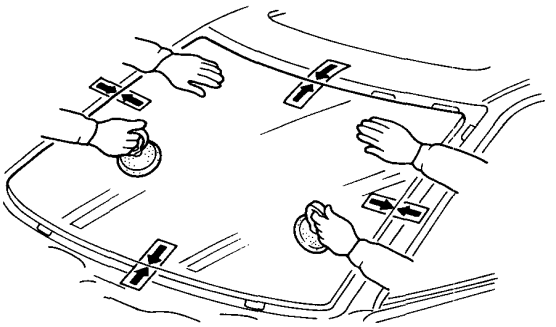

ALIGN MARKS

14. Attach the molding clips to the upper molding, then install the upper molding.

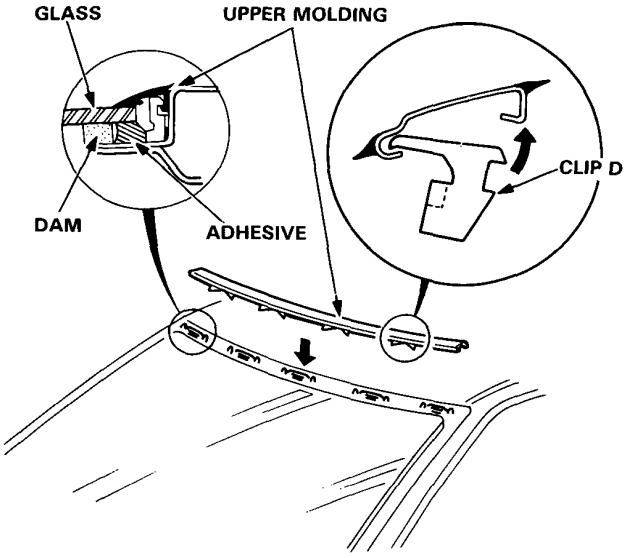

15. Scrape or wipe the excess adhesive off with a putty knife or gauze.

    NOTE: Wipe with a soft rag or towel dampened with alcohol to remove adhesive from a painted surface or glass.

16. Install the side molding.

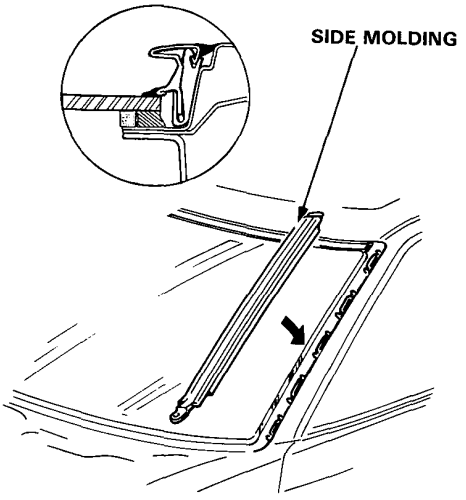

17. After the adhesive is dry, spray water over the glass and check for leaks. mark leaking areas and let the glass dry, then seal with sealant.

    NOTE: Let the car stand for at least 4 hours after glass installation. If the car has to be used within the first 4 hours, it must be driven slowly.

18. Fix the headliner back into position, then install:

    - Lower molding.
    - Air scoop and front wiper.
    - Front pillar trim.
    - Sunvisors and holders.
    - Rearview mirror.
    - Front map light.

Rear Window

Removal

CAUTION:
- **Wear gloves to remove and install the glass.**
- **Do not damage the defroster grid lines.**

NOTE: You will need a molding clip release tool to remove some moldings. If necessary, make one that has the dimensions shown of page 14-25.

1. To remove the rear glass, first remove:
   - Rear shelf (page 14-42).
   - Quarter window trim panel (page 14-42).
2. Disconnect the defroster leads, and remove their holders.

   NOTE: Avoid scratching or scoring the glass with the cutter blade.
3. Remove the screw, then remove the lower molding.
4. Remove the side molding with a molding clip release tool.

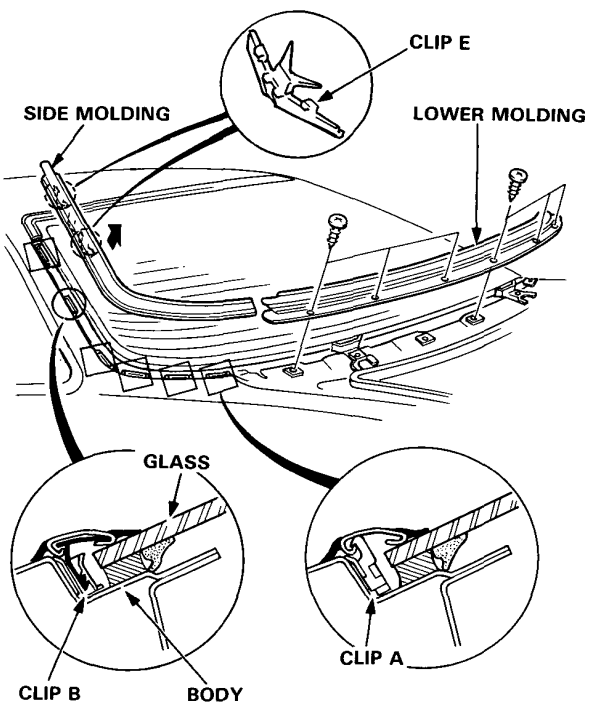

5. Disconnect the clips then remove the corner and upper moldings.

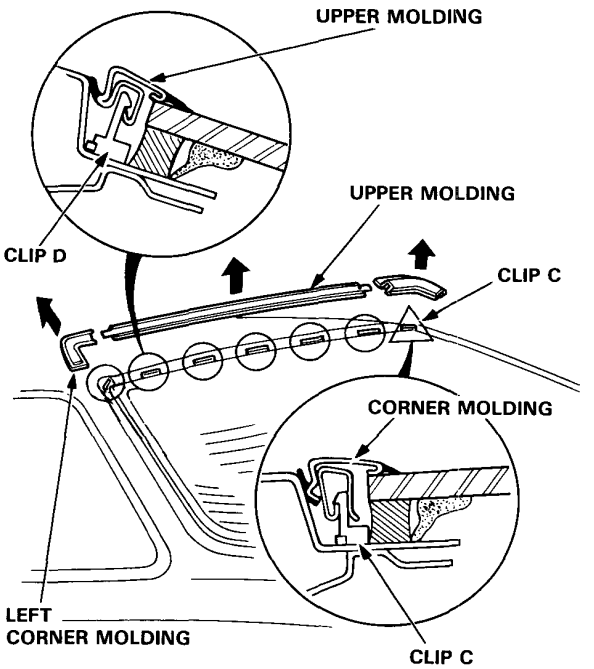

6. Lower the rear of the headliner.

   NOTE: Take care not to bend the headliner excessively.
7. Apply protective tape along the edge of the body next to the glass as shown.

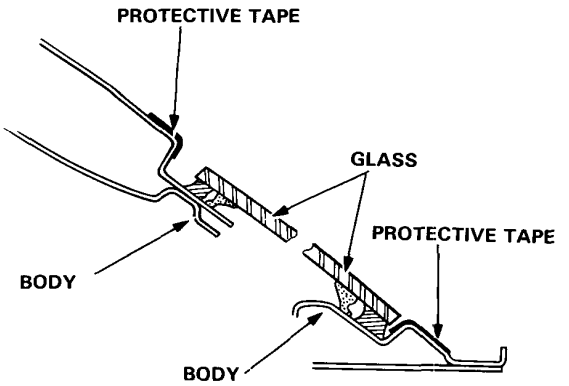

8. Using an awl, make a hole through the glass adhesive from inside the car. Push piano wire through the hole and wrap each end around a piece of wood.

9. With a helper on the outside, pull the wire back and forth in a sawing motion and carefully cut through the adhesive around the entire glass.

CAUTION: Hold the piano wire as close to the glass as possible to prevent damage to the body.

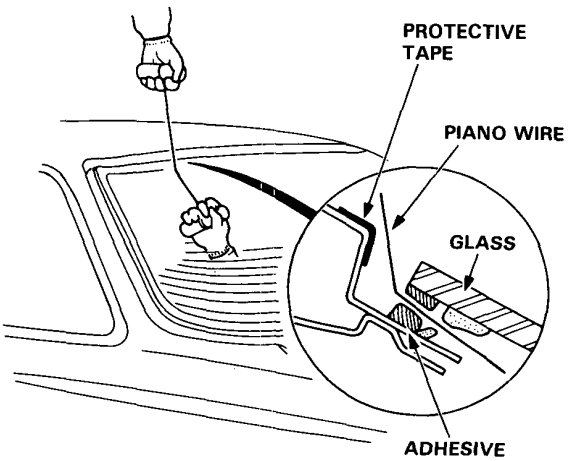

Installation

1. Scrape the old adhesive smooth with a knife, to a thickness of about 2 mm (0.08 in.) on the bonding surface around the entire glass flange.

   NOTE:
   - Do not scrape down to the painted surface of the body; damaged paint will interfere with proper bonding
   - Remove all traces of teh rubber material from the body.
   - Mask off surrounding surfaces before painting.

2. Clean the body bonding surface with a sponge dampened in alcohol.

   NOTE: After cleaning, keep oil, grease or water from getting on the surface.

3. If the glass is to be reinstalled, use a putty knife to scrape off all traces of old adhesive, then clean the glass surface with alcohol where new adhesive is to be applied.

   NOTE: Make sure the bonding surface is kept free of water, oil and grease.

   CAUTION: Avoid setting the glass on its edges; small chips way later develop into cracks.

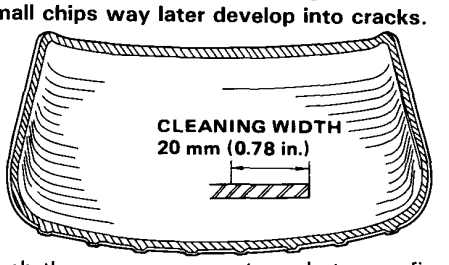

4. Push the screw grommets and stopper firmly into place. Peel the backing off the molding retainer, then install the retainer by pushing them firmly into place at the locations shown.

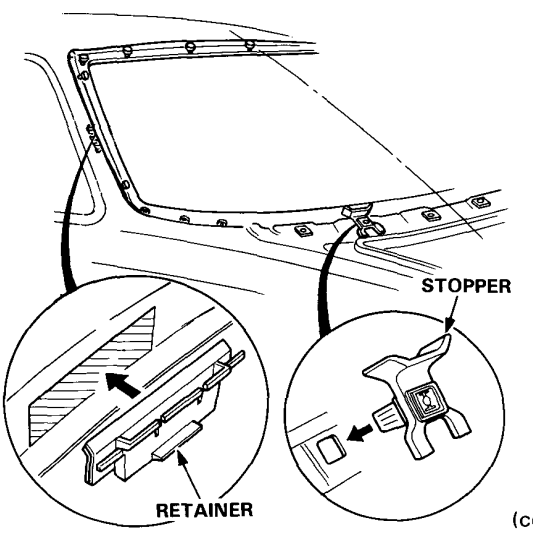

(cont'd)

Installation (cont'd)

5. Install the molding clips as shown.

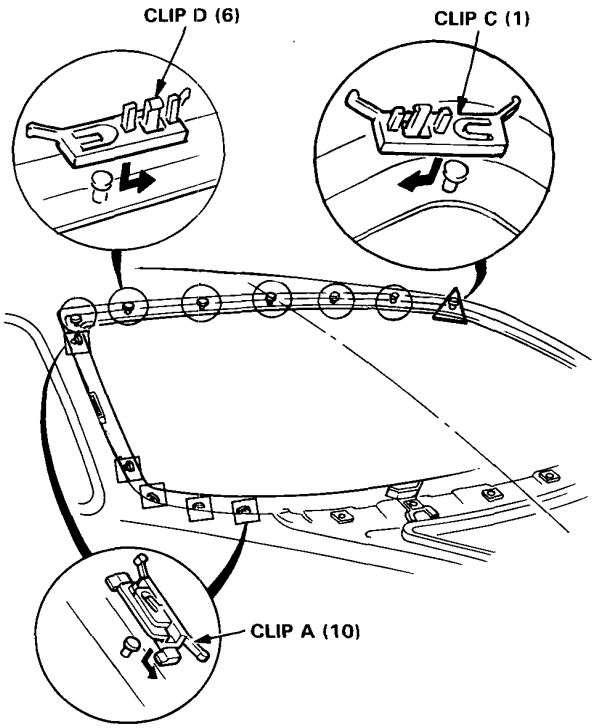

6. Attach the B and E clips to the side molding as shown.

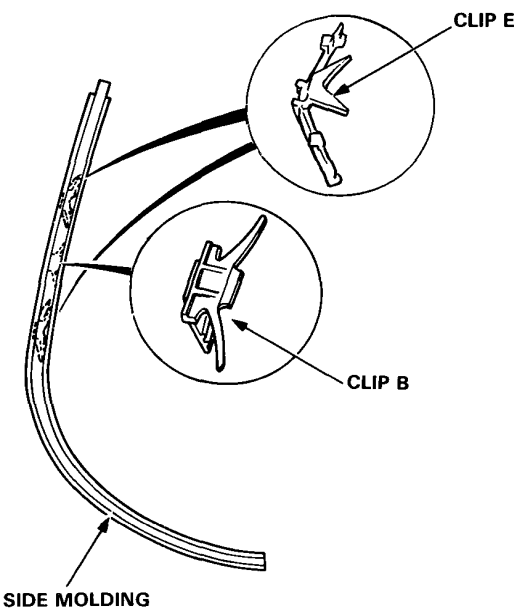

7. Set the glass upright on the body, and center it in the opening. Mark the location by marking lines across the glass and body with a grease pencil at the four points shown.

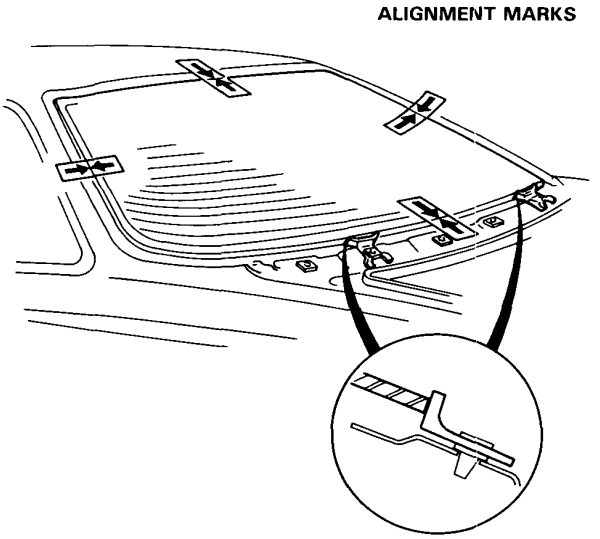

8. Glue the rubber dam to the inside face of the glass as shown, to contain the adhesive during installation.

NOTE: Be careful not to touch the glass where adhesive will be applied.

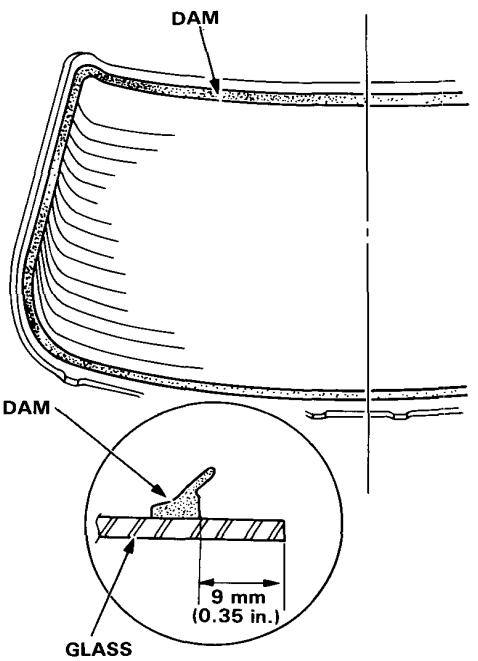

9. With a sponge, apply a light coat of glass primer around the edge of the glass as shown, then lightly wipe it off with gauze or cheesecloth.

NOTE:
- *Do not apply body primer to the glass, and do* not get body and glass primer sponges mixed up.
- Never touch the primed surfaces with your hands. If you do, the adhesive may not bond to the glass properly, causing a leak after the glass is installed.
- Keep water, dust, and abrasive materials away from the primed surface.

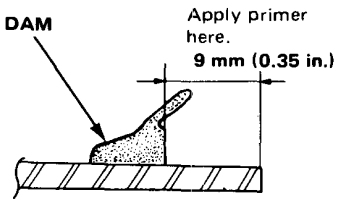

10. With a sponge, apply a light coat of body primer to the original adhesive remaining around the window opening flange.

NOTE:
- Do not apply glass primer to the body, and be careful not to mix up glass and body primer sponges.
- Never touch the primed surfaces with your hands.

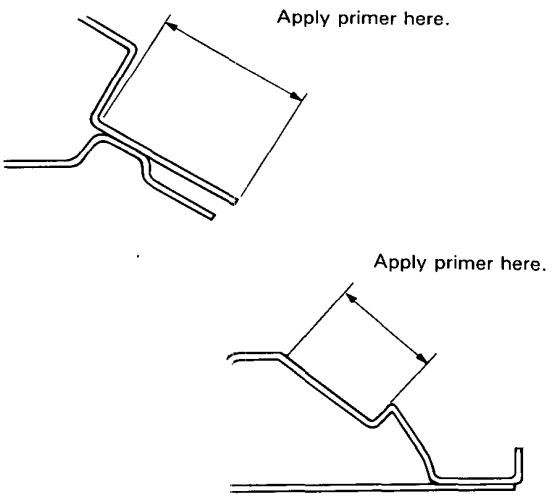

11. Thoroughly mix the adhesive and hardener together on a glass or metal plate with a putty knife.

NOTE: Clean the plate with a sponge and alcohol before mixing.

12. Follow the instructions that came with the adhesive.

13. Before filling a cartridge, cut off the end of the nozzle at the angle shown.

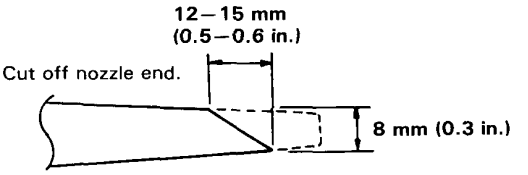

14. Pack adhesive into the cartridge without air pockets, to ensure continuous delivery. Put the cartridge in a caulking gun, and run a bead of adhesive around the edge of the glass as shown.

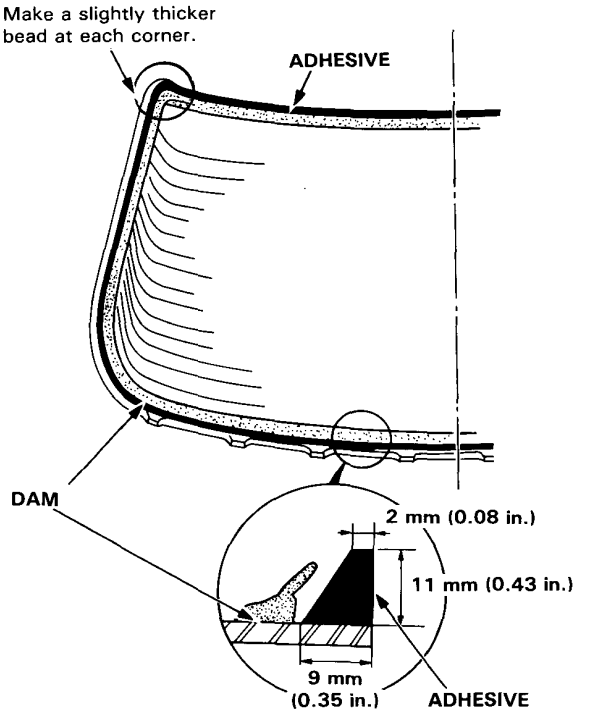

(cont'd)

Installation (cont'd)

15. Use suction cups to hold the glass over the opening, align it with the marks made in step 7 and set it down on the adhesive. Lightly push on the glass until its edge is fully seated on the adhesive all the way around.

    NOTE: Do not close or open the doors until window adhesive is dry.

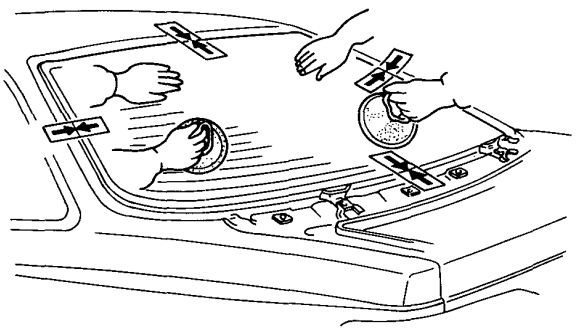

16. Install the upper molding and right and left corner modlings.

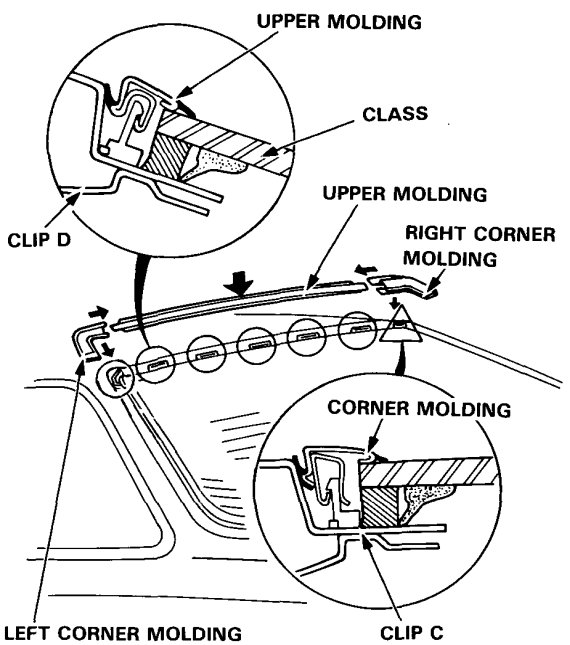

17. Install the right and left side moldings, and set the lower molding.

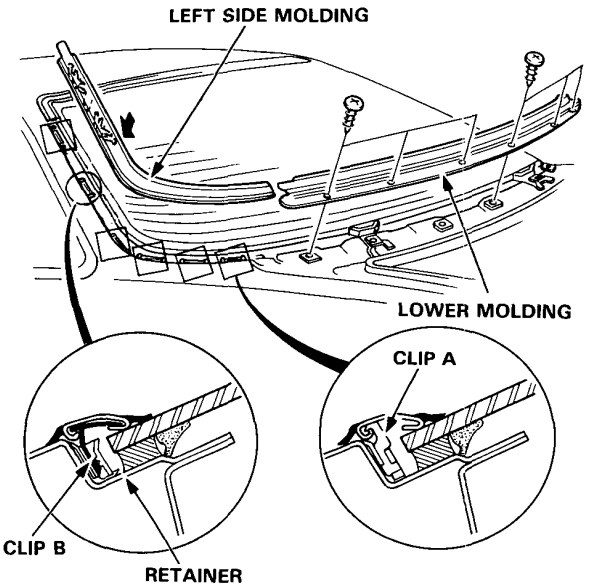

18. After the adhesive is dry, spray water over the glass and check for leaks. Mark leaking areas and let the glass dry, then seal with sealant.

    NOTE: Let the car stand for at least 4 hours after glass installation. If the car has to be used within the first 4 hours, it must be driven slowly.

19. Fix the headliner back into position then install:
    - Rear shelf
    - Quarter window trim panel.

Index

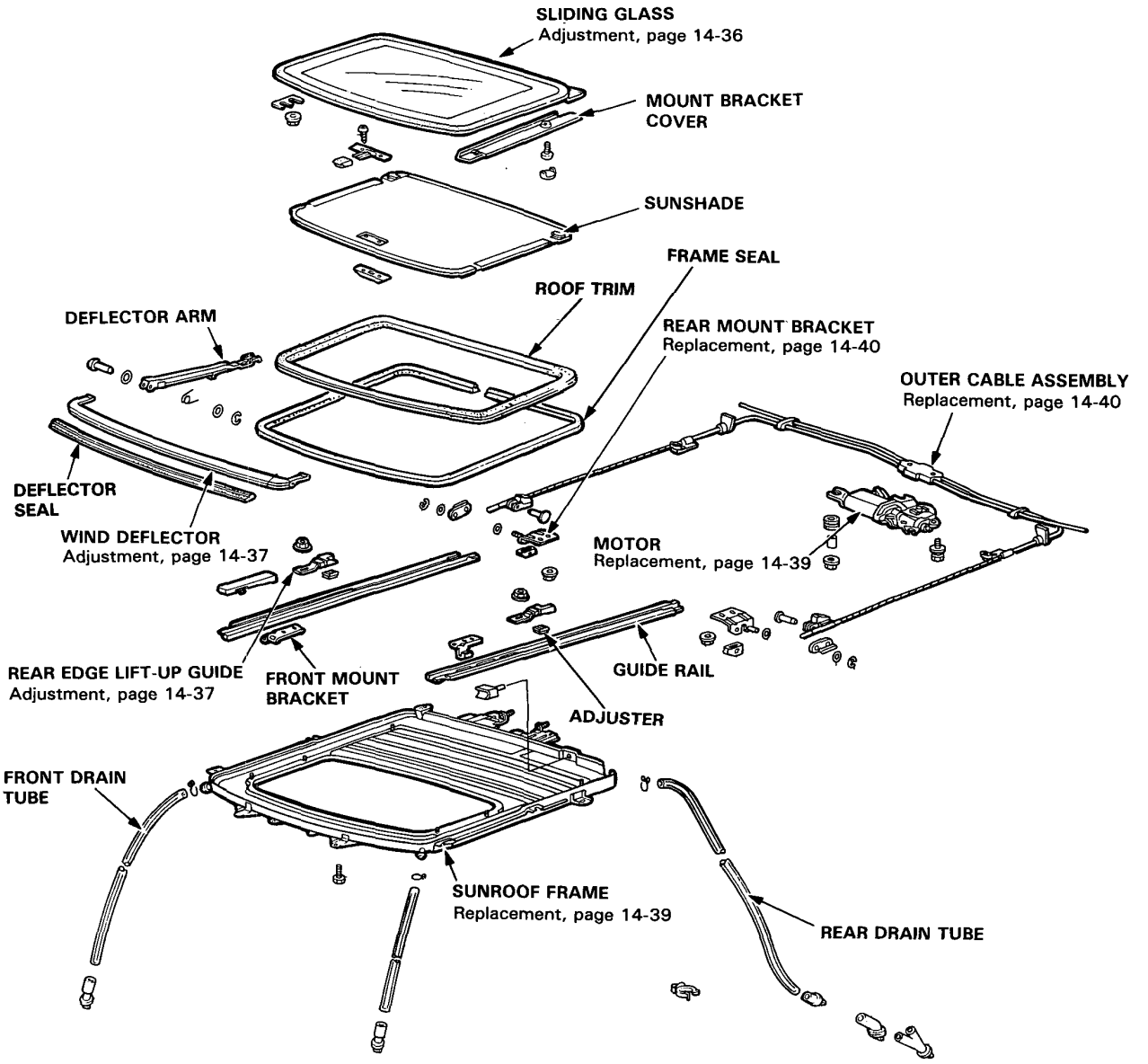
SLIDING GLASS
Adjustment, page 14-36
MOUNT BRACKET COVER
SUNSHADE
FRAME SEAL
ROOF TRIM
DEFLECTOR ARM
REAR MOUNT BRACKET
Replacement, page 14-40
OUTER CABLE ASSEMBLY
Replacement, page 14-40
DEFLECTOR SEAL
WIND DEFLECTOR
Adjustment, page 14-37
MOTOR
Replacement, page 14-39
REAR EDGE LIFT-UP GUIDE
Adjustment, page 14-37
FRONT MOUNT BRACKET
GUIDE RAIL
ADJUSTER
FRONT DRAIN TUBE
SUNROOF FRAME
Replacement, page 14-39
REAR DRAIN TUBE

Sunroof

Troubleshooting

Symptom	Probable Cause
Water leak	1. Clogged drain tube. 2. Gap between glass weatherstrip and roof panel. 3. Defective or improperly installed glass weatherstrip.
Wind noise	1. Excessive clearance between glass weatherstrip and roof panel.
Deflector noise	1. Improper clearance between deflector seal and frame seal. 2. Insufficient deflector extension. 3. Deformed deflector.
Motor noise	1. Loose motor. 2. Worn gear or bearing. 3. Outer cable deformed.
Sliding glass does not move, but motor turns	1. Clutch out of adjustment. 2. Foreign matter stuck between guide rail and sliding glass panel. 3. Outer cable loose. 4. Outer cable not attached properly.
Sliding glass does not move and motor does not turn (Sliding glass can be moved with sunroof wrench)	1. Blown fuse. 2. Faulty switch. 3. Battery run down. 4. Defective motor.

Glass Height Adjustment

Roof panel should be even with the glass weatherstrip, to within 1 ± 1.5 mm (0.04 ± 0.06 in.) all the way around. If not, slide sunshade back, and:

1. Pry plug out of the glass mount bracket cover, remove screw, then slide cover off to the rear.
2. Loosen mount bracket nuts and install shims between glass frame and bracket as shown.
3. Repeat on opposite side if necessary.

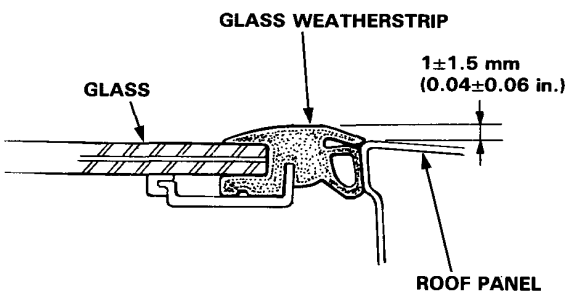

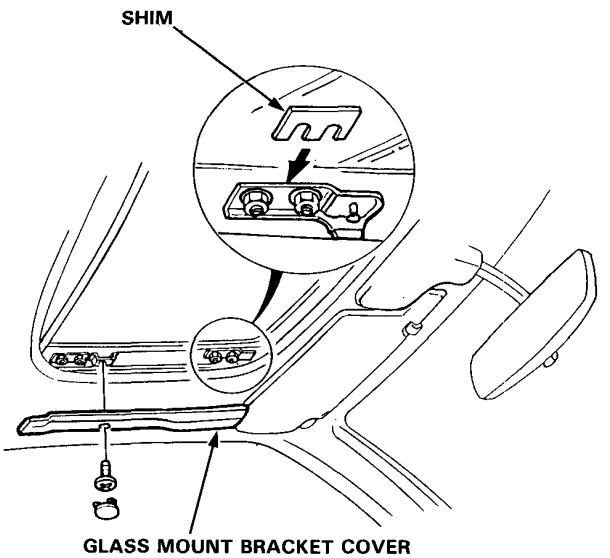

Rear Edge Closing Adjustment

Open the glass about a foot then close it to check where rear edge begins to rise.
If it rises too soon and seats too tight against roof panel, or too late and does not seat tight enough, adjust it.

1. Open the glass fully.

2. Remove the rail covers from both sides, and loosen lift-up guide nuts.

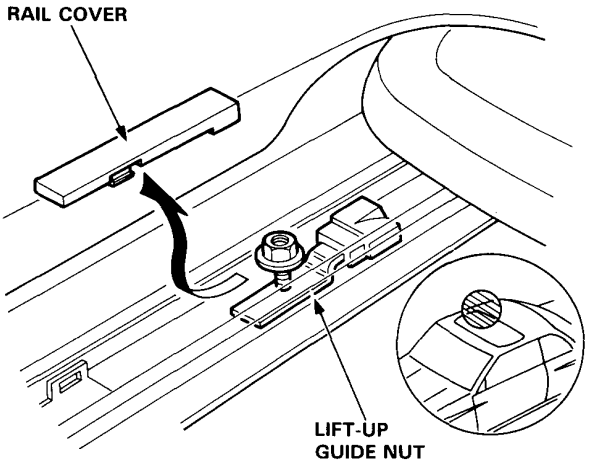

3. Move the guides forward or back, then tighten nuts and re-check roof closing.

   The guides have pitches of 1.5 mm (0.06 in.) each and can be adjusted 2 pitches forward or back.

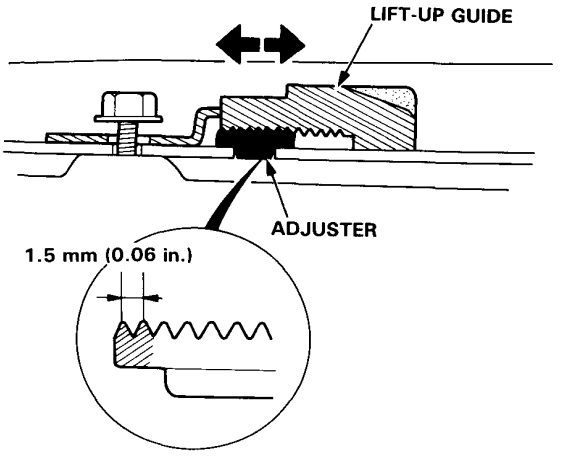

Wind Deflector Adjustment

NOTE: A gap between deflector seal and roof panel will cause wind noise when driving at high speed with the sunroof open.

1. Open the sunroof and pry the caps off both sides.

2. Loosen deflector mounting screws.

   NOTE: Wind deflector can be adjusted 2 mm (0.08 in.) forward or back.

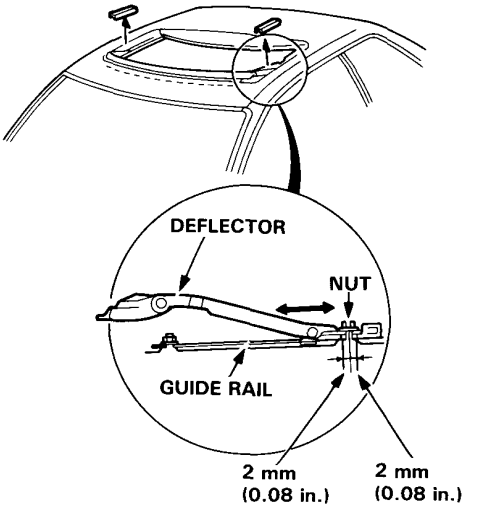

3. Adjust deflector forward or back so the edge of its seal touches the roof evenly.
   Deflector seal should touch the roof across entire front edge.

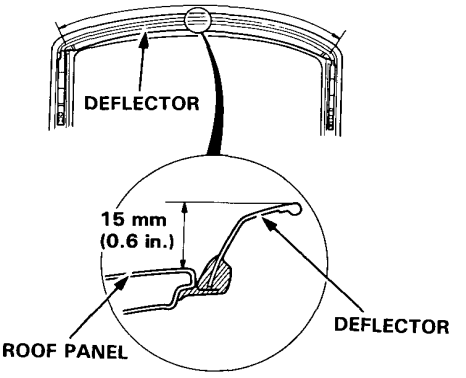

NOTE: The height of the deflector when open can not be adjusted. If damaged or deformed, replace it.

Glass and Sunshade Replacement

1. Slide sunshade all the way back.
2. Pry plug out of each bracket cover, remove screw, and slide cover off to the rear.

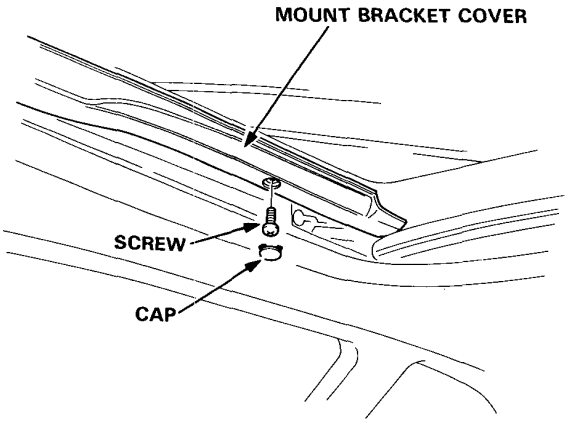

3. Close the glass fully.
4. Remove the nuts from front and rear mounts on both sides.

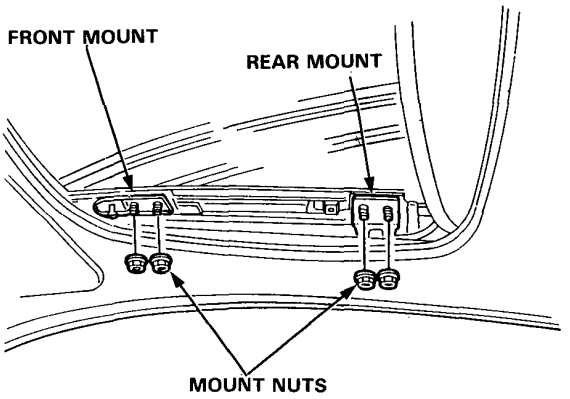

5. Remove the sliding glass by lifting up and pulling forward as shown.

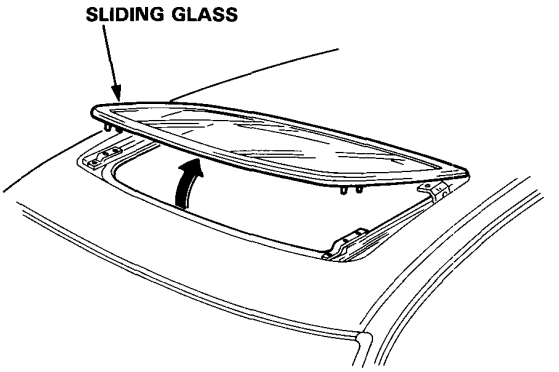

6. Remove the wind deflector.
7. Remove the sunshade as shown.

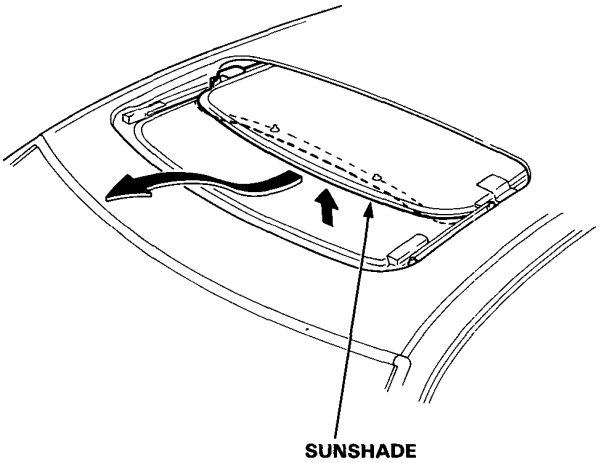

Motor, Drain Tube, and Frame Replacement

CAUTION: Be careful not to damage the seats or other interior trim.

1. Remove the sliding glass (page 14-38) and the headliner (page 14-43).
2. Disconnect the motor and limit switch wire harness; remove the clips securing the dome light wire harness.
3. Remove the sunroof motor by removing the two bolts and three nuts.
4. Disconnect the drain tubes.
5. Remove the ten 6 x 16 mm mounting bolts from the frame, and remove the frame from the car.

NOTE: You may require assistance when removing the frame.

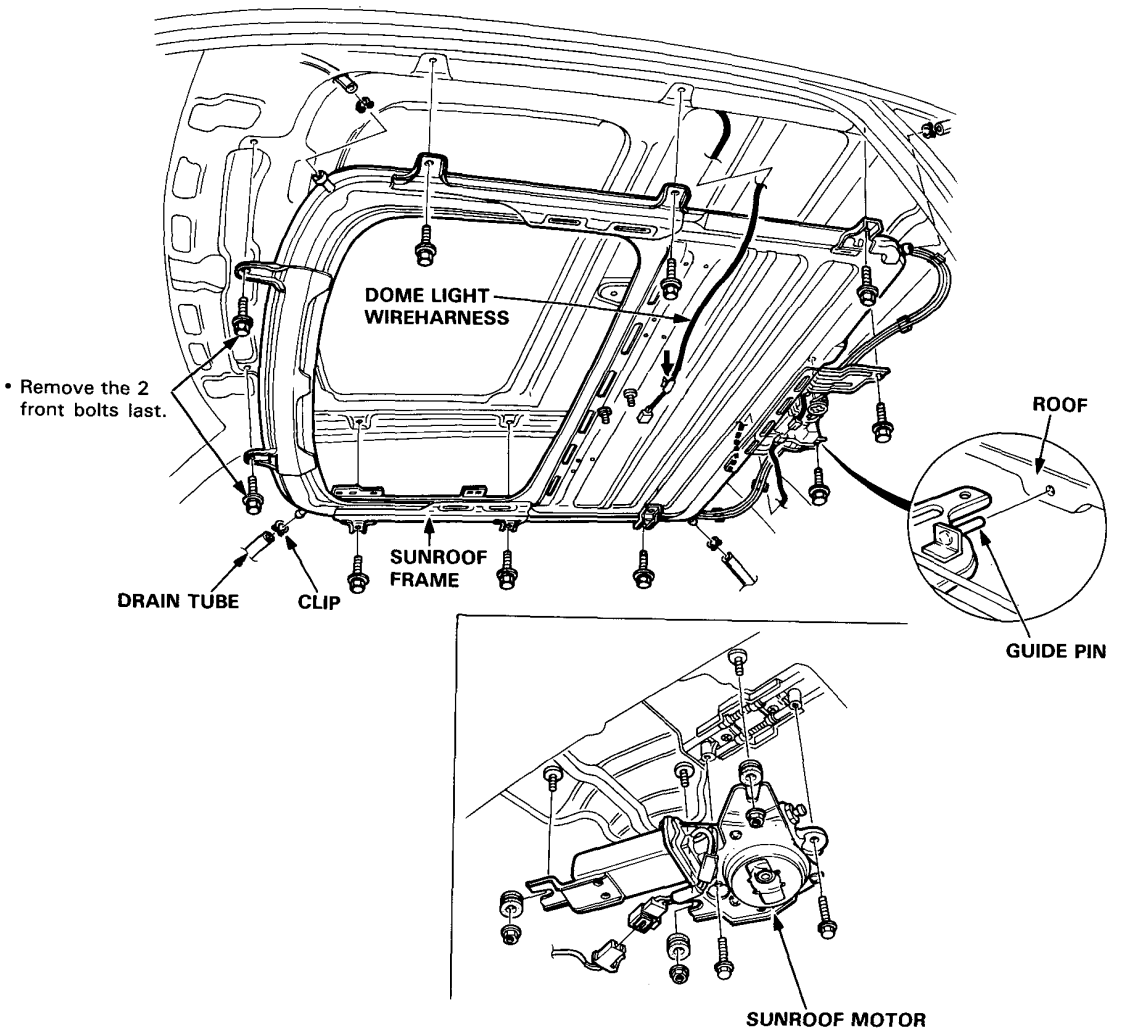

6. To install, insert the frame's rear pins into the body holes, then install parts in the reverse order of removal.
   NOTE: Install the tube clips with the ends facing the side to ease installation of the headliner.

Cable Replacement

With sunroof out of the car, remove the guide rail mounting nuts, lift off the guide rails, and remove the cables with rear mount brackets attached.

NOTE: Fill the groove in each grommet with sealant and apply molybdenum grease to the inner cable.

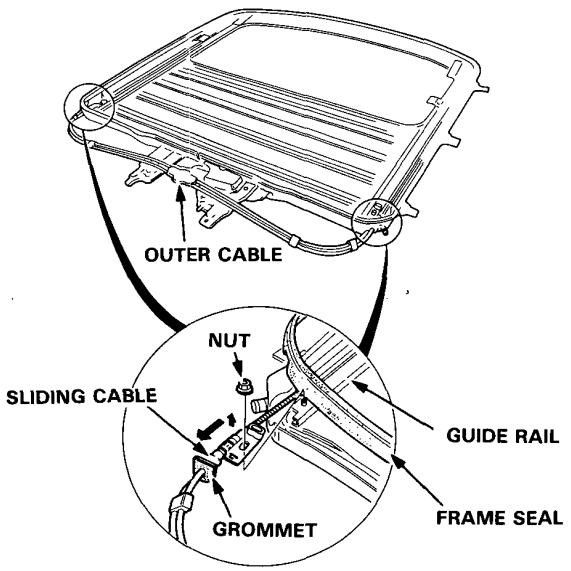

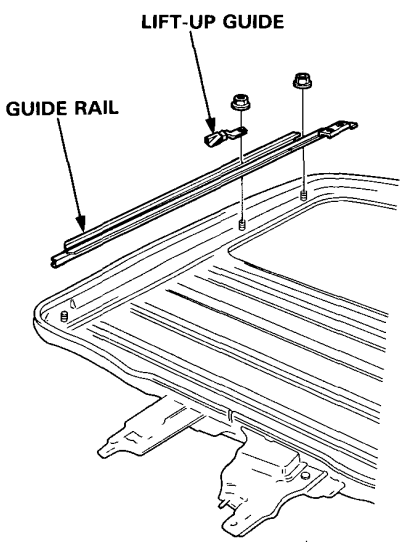

Rear Mount Bracket Disassembly

1. Remove the side guides from the rear mount brackets.

   NOTE: Replace the guides with new ones whenever they are disassembled.

2. Pry the E-clip off the pin, and remove the rear mount bracket from the cable.

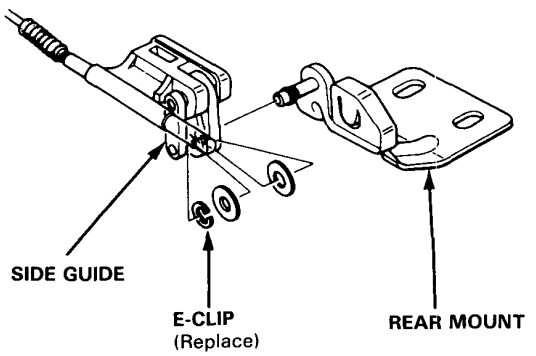

Drag Check (Motor Removed)

Before installing the sunroof motor, measure effort required to close sliding panel using a spring scale as shown.

CAUTION: When using the spring scale, protect the leading edge of the sunroof with a shop rag.

If load is over 98 N (10 kg, 22 lb), check side clearance and glass height adjustment (page 14-40).

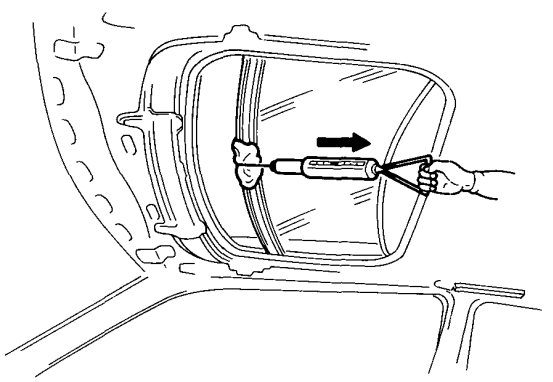

Wind Deflector Installation

Installation is done in the reverse order of removal. When installing, make sure to insert the deflector ends tightly into the guide rails and arrange the deflector and rails in parallel.

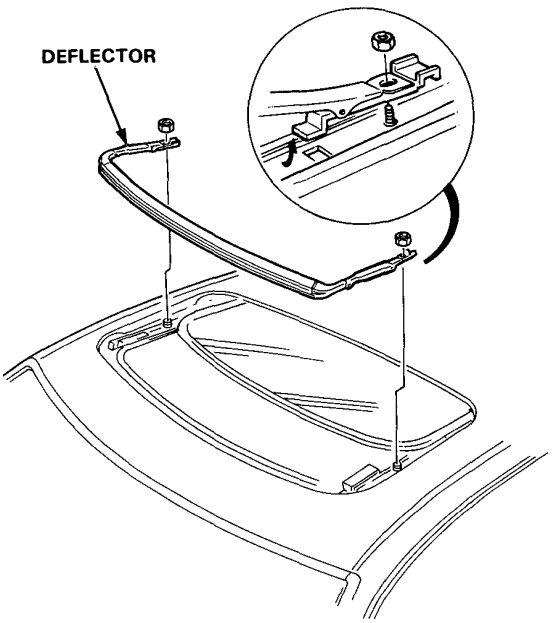

Closing Force Check (Motor Installed)

1. After installing all removed parts, have a helper hold the switch to close the sunroof while you measure force required to stop it. Attach spring scale as shown. Read force as soon as glass stops moving, then immediately release the switch and spring scale.

   CAUTION: When using the spring scale, protect the leading edge of the sunroof with a shop rag.

   Closing Force: 196–245 N (20–30 kg, 44–55 lb)

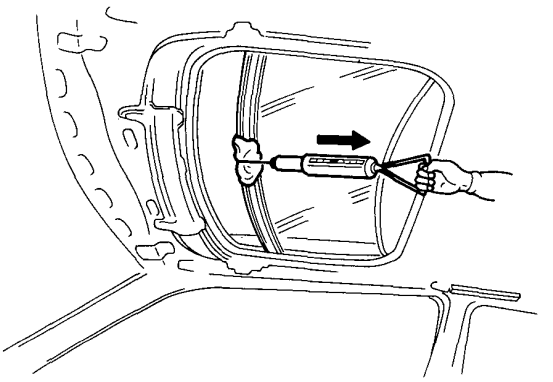

2. If force is not within specification, adjust by turning sunroof motor clutch adjusting nut. After adjusting, install a new lockwasher and bend it flat against the adjusting nut.

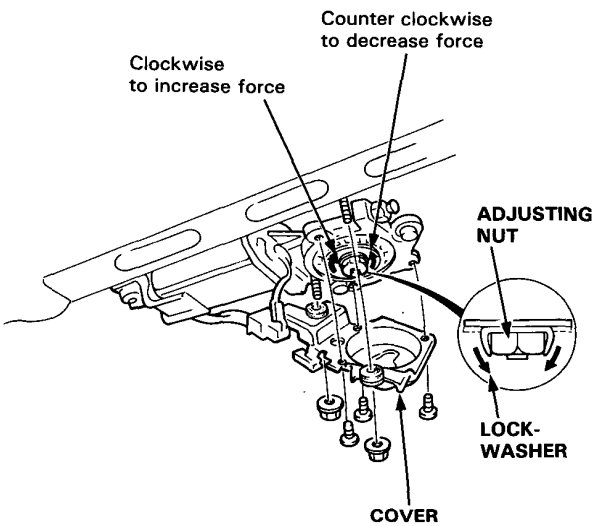

Headliner

Replacement

1. Remove:
   - Sunvisors and holders.
   - Rearview mirror and base (page 14-51).
   - Front pillar trim (page 14-42).
   - Quarter window trim panel (page 14-42).
   - Dome light.
   - Roof trim.
2. Remove the screws, then remove the coat hanger and grab handle.
3. Remove the mounting screws and the clips, then remove the headliner.

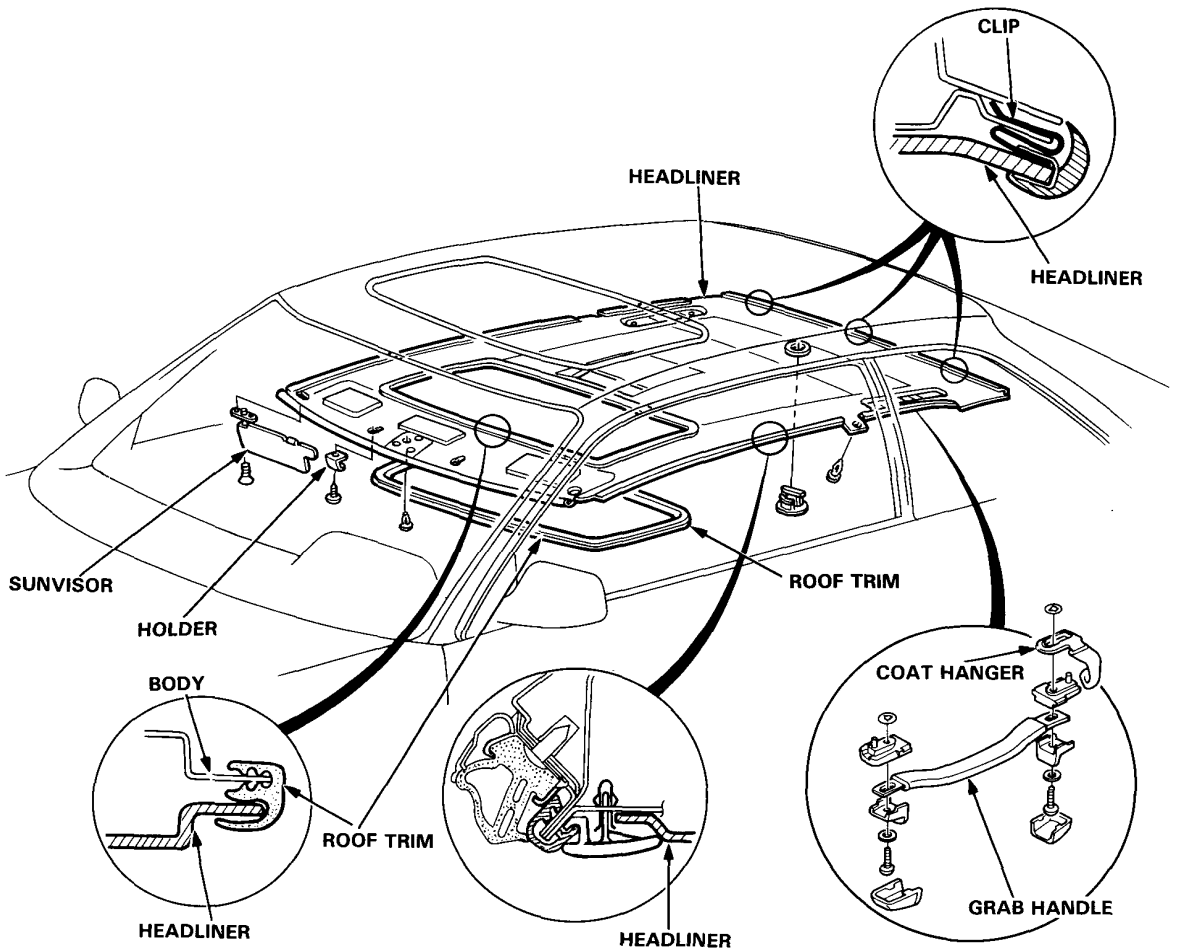

4. Assemble the headliner in the reverse order of disassembly.

NOTE:
- When inserting the headliner inside the passenger cabin, be careful not to fold or bend it. Also, be careful not to scratch the body.
- Check that the two sides of the headliner are securely attached to the trim.

Front Disassembly

Disassemble in numbered sequence.

NOTE:
- When removing the seat back, detach the clips underneath the trim cover and pull the cover back enough so the bolts are visible (page 14-45).
- To attach the seat back, follow the steps for removal in reverse. When attaching the reclining adjuster slide rail to the seat cushion, however, start with the two seat lifter mounting bolts at the right and left.

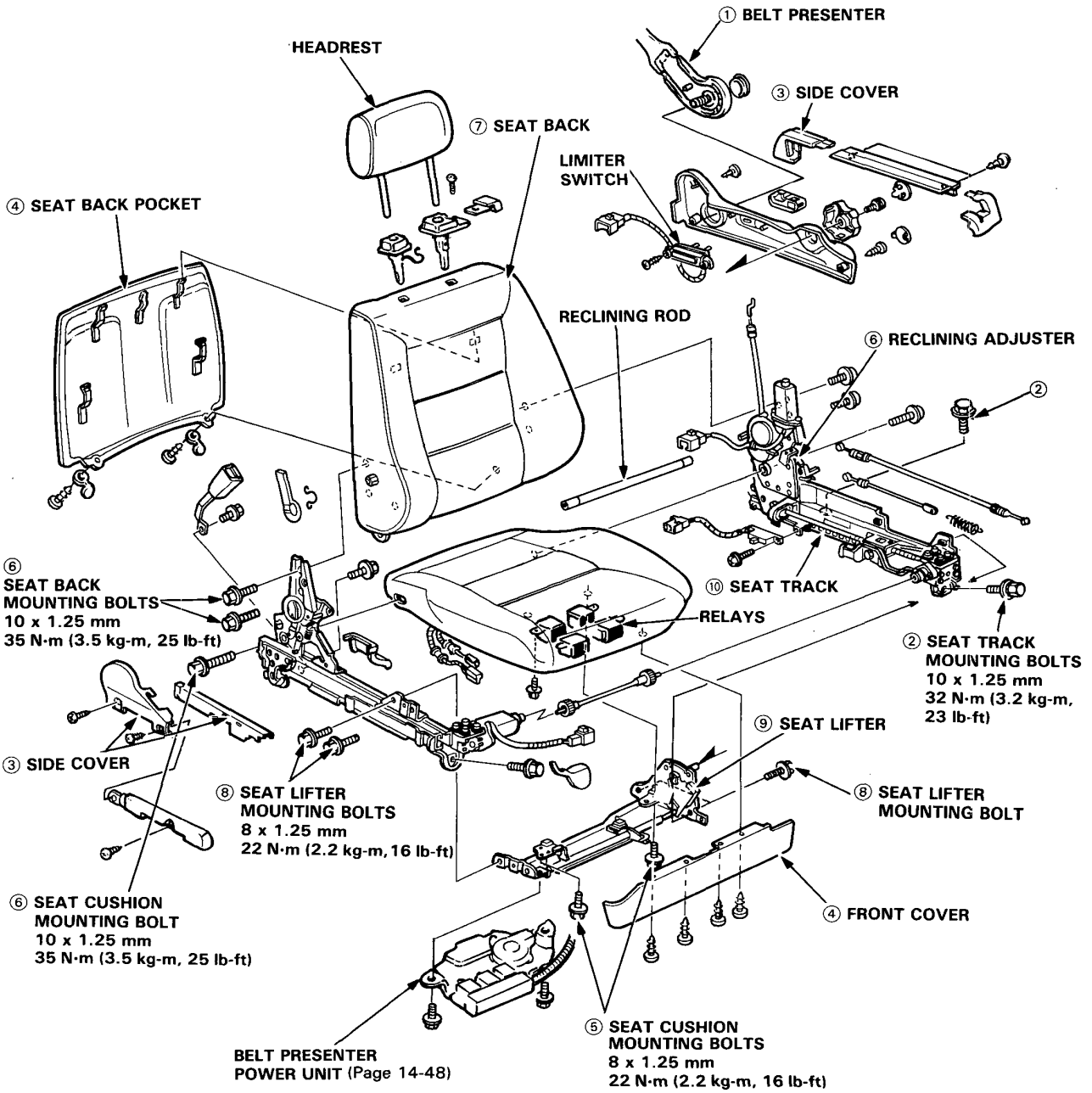

Front Cover Replacement

Front Seat Back:

1. Separate the seat cushion and back. (page 14-44).
2. Remove the springs and the clips.
3. Remove the upper and lower hooks, then remove the trim cover.

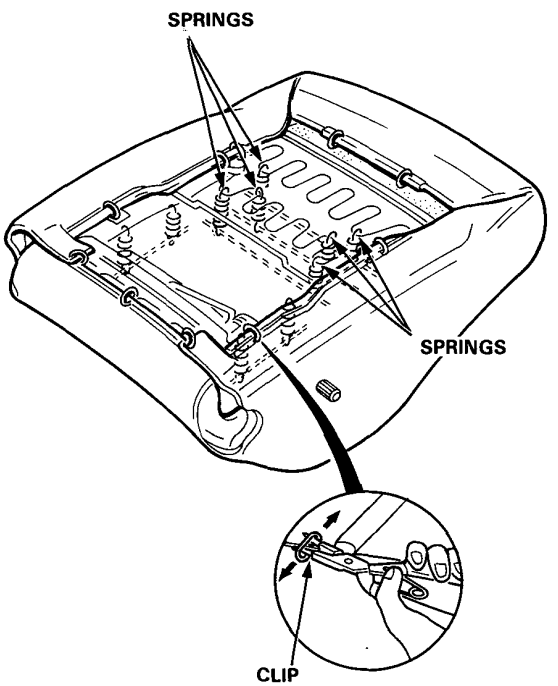

Front seat cushion:

4. Remove the screw, then remove the right and left corner brackets.
5. Remove the 4 clips, and front and rear trim cover first, then remove the right and left hooks.
6. Remove the 3 springs, then remove the trim cover.

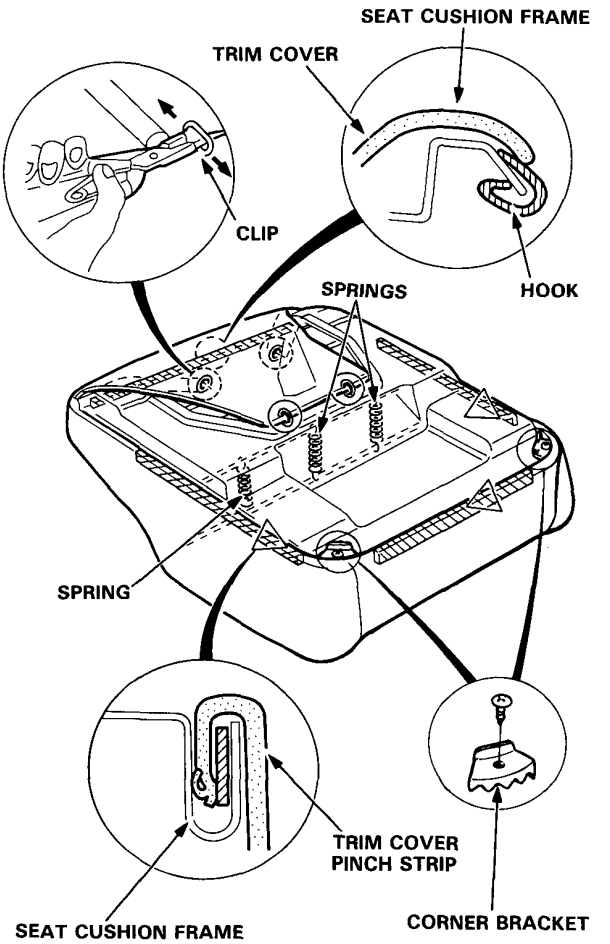

NOTE: To prevent wrinkles when installing a seat cover, make sure the material is stretched evenly over the frame before securing all the clips.

Rear Replacement

Disassemble in numbered sequence

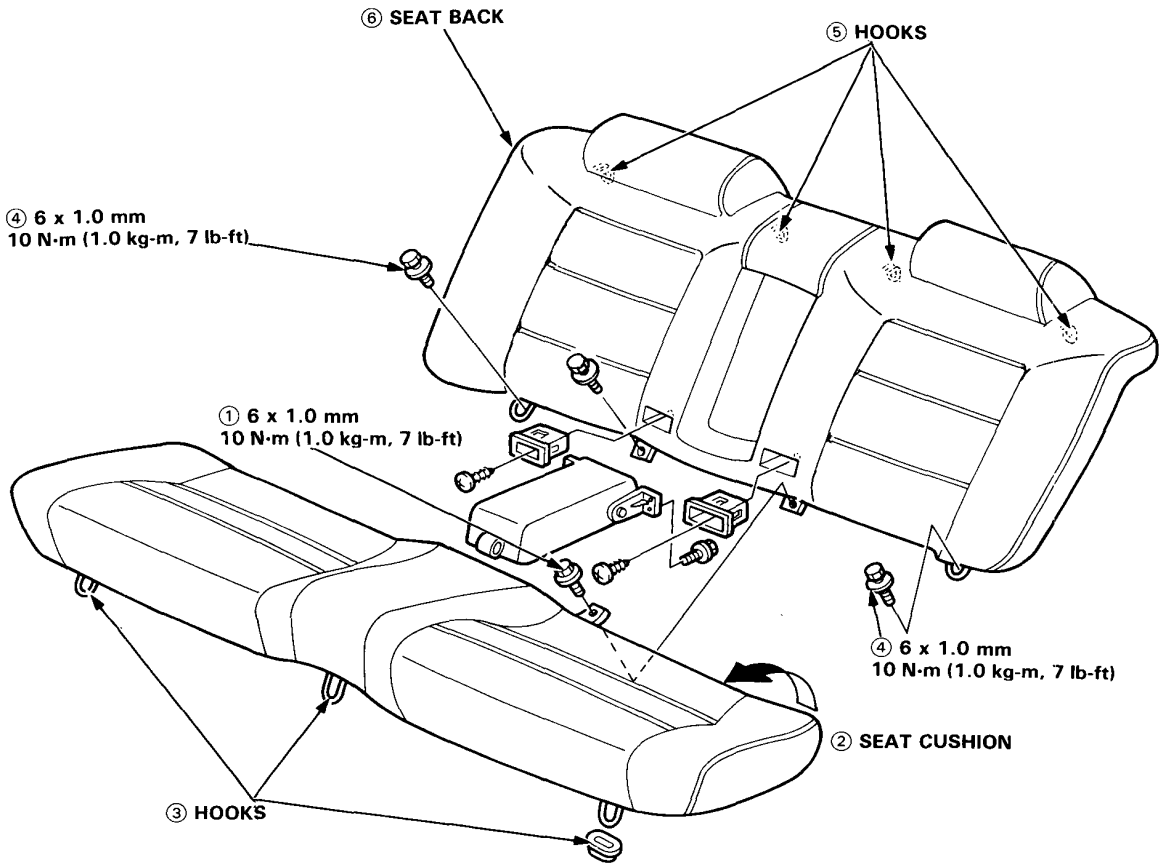

Front Replacement

(Driver's)

CAUTION: Check the seat belts for damage (page 14-51), and replace them if necessary. Be careful not to damage them during removal and installation.

1. Remove the rear seat, then remove the quarter trim panel (page 14-42).
2. Remove the upper anchor bolt, lower anchor bolt and retractor bolt with a 17 mm socket or box-end wrench.
3. Remove the front seat, them remove the center anchor bolt.

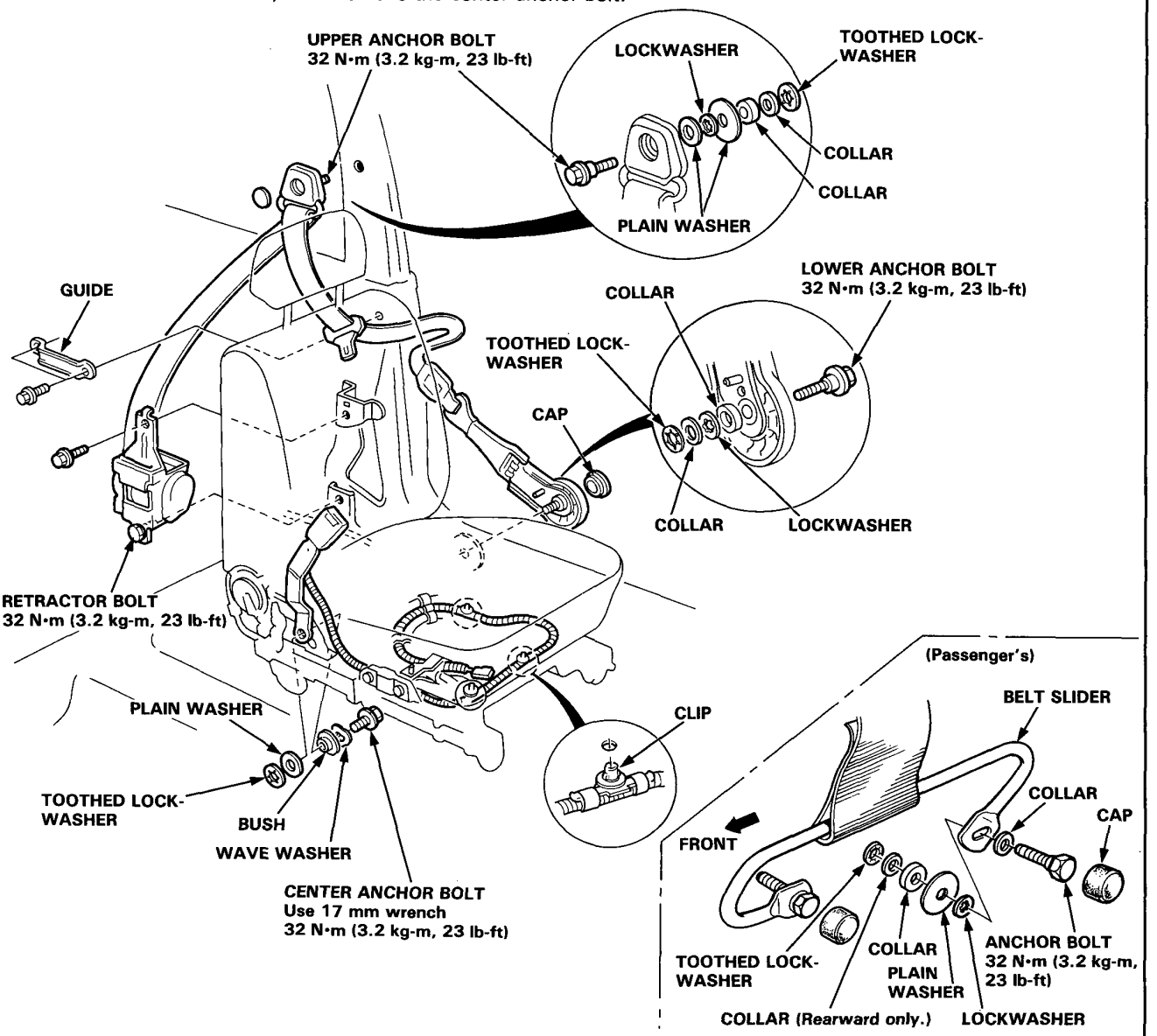

4. Install the seat belt in the reverse order of removal. Make sure you assemble the washers and collars correctly on the upper and lower anchor bolts.

   NOTE: *Before attaching the quarter trim panel, make sure there are no twists in the belt.*

Belt Presenter Removal

1. Remove the front seat (page 14-44).
2. Remove the lower anchor bolt, then remove the rotary arm.
3. Remove the screws, lifter handle and adjuster knob, then remove the seat side cover.

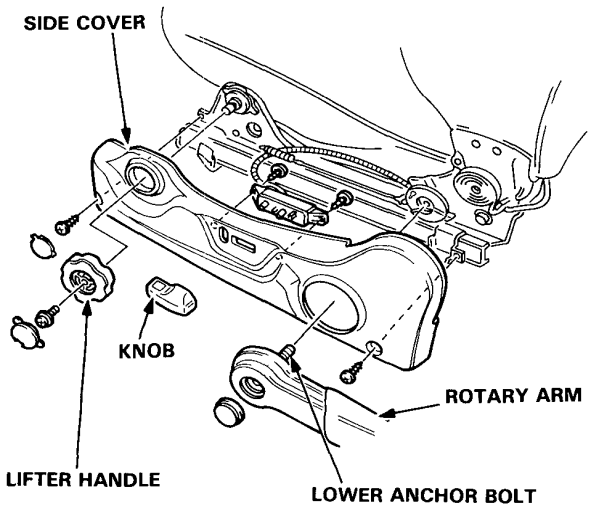

4. Remove the circlip.
5. Remove the return spring, then separate rotary plate B and spring stopper.
6. Remove the return cable end and damper spring.
7. Remove the rotary plate A and rotary cable.

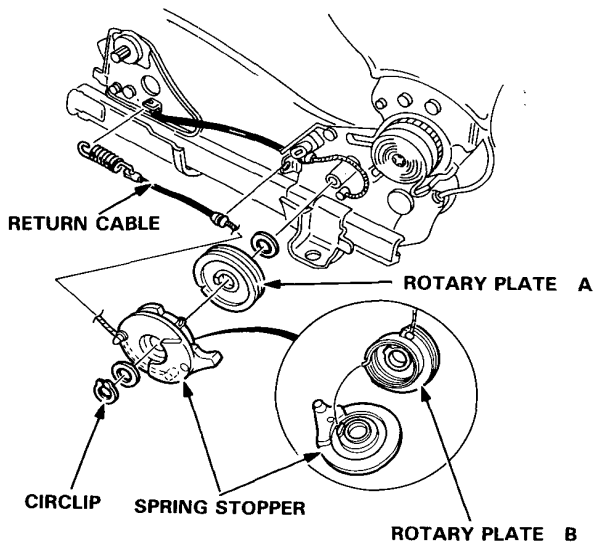

8. Remove the bolts, then remove the power unit from under the seat cushion.

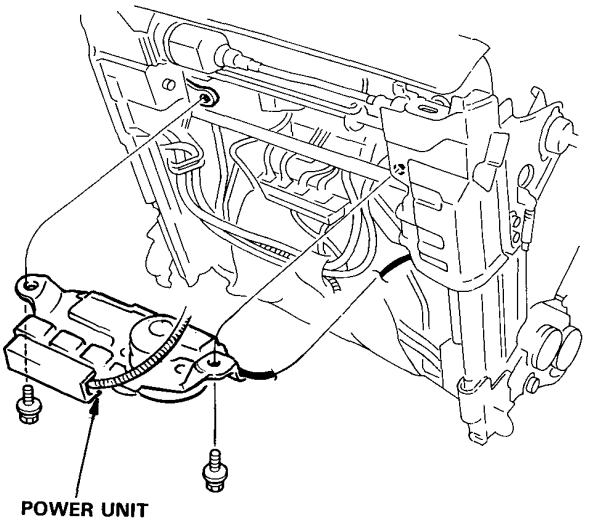

9. Remove the screws, then remove the rotary plate cover.
10. Loosen the lock nut and remove the rotary cable from the bracket.
11. Remove the cable end from the rotary plate C .

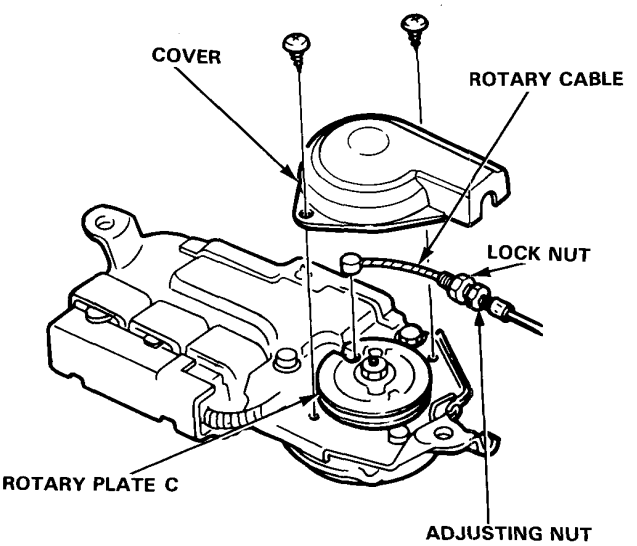

12. Remove the nut, retainer, and rotary plate C.

13. Remove the mounting bolts and drive motor.

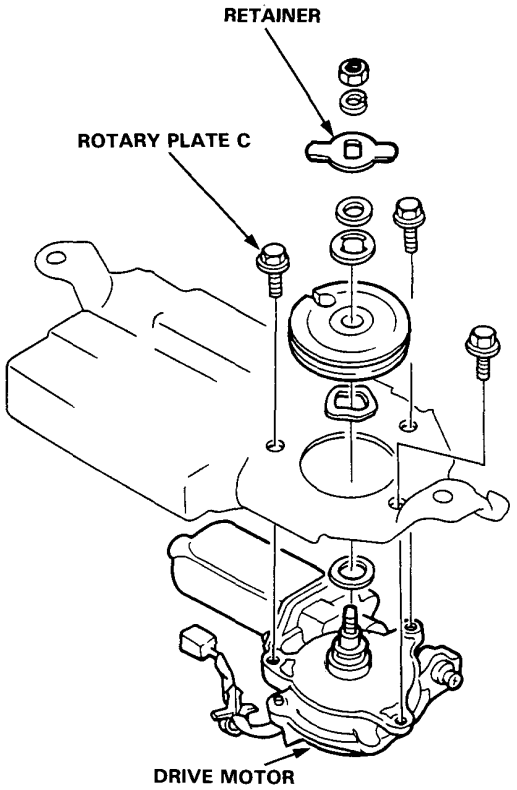

Installation

To install, reverse the removal procedure.

1. Grease all moving surfaces.

2. Install the spring stopper onto rotary plate B and turn plate B clockwise to make sure that it is seated firmly.

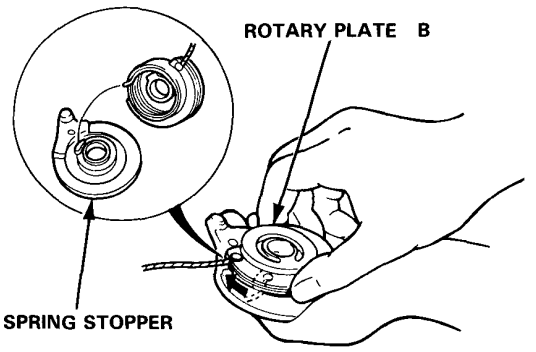

3. Install the rotary plate A aligning the hole of plate B with the dowel pin of plate A .

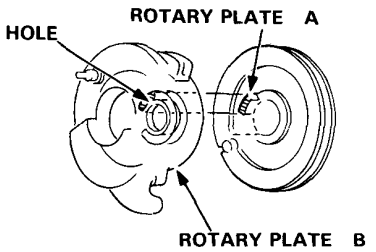

4. Check that the spring stopper has moved to contact the rubber cushion after assembly.

5. Adjust the free play of the rotary cable at the adjusting nut on the drive motor side.

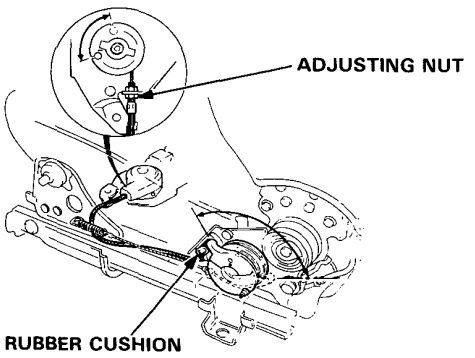

Rear Replacement

CAUTION: Check the seat belts for damage (page 14-51), and replace them if necessary. Be careful not to damage them during removal and installation.

1. Remove the rear seat.
2. Remove the quarter trim panel.
3. Remove the upper anchor bolt, the lower anchor bolt and retractor bolt with a 17 mm socket or box-end wrench.

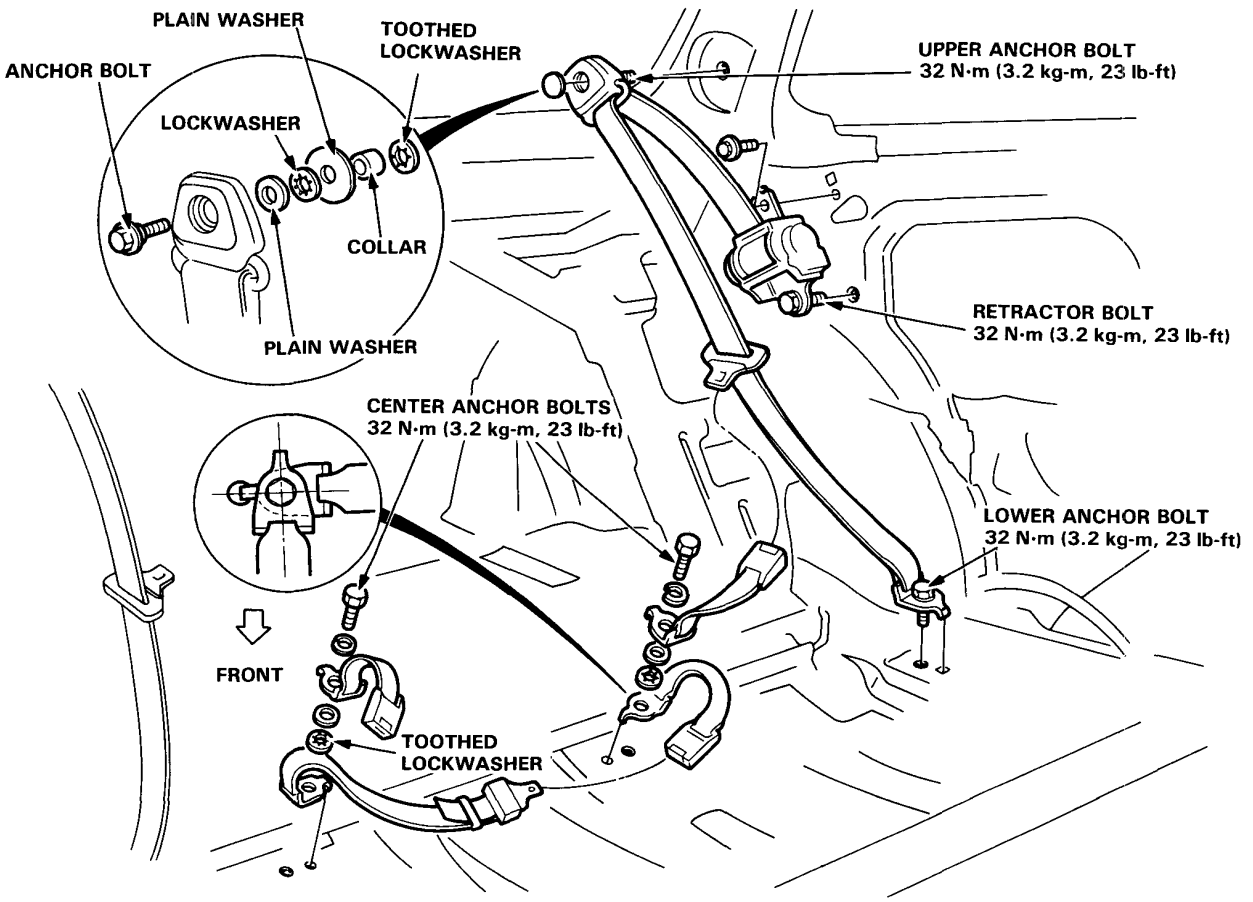

4. Install the seat belt in the reverse order of removal.

Inspection

Retractor Inspection

1. With the retractor installed, check that the belt can be pulled out freely.

2. Make sure that the belt does not lock when the retractor is tilted over slowly to 15° from the mounted position. The belt should lock when the retractor is tilted over 45°.

   CAUTION: Do not attempt to disassemble the retractor.

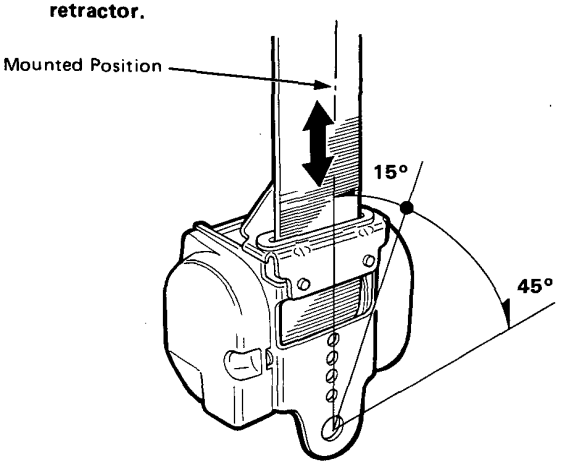

3. Replace the belt with a new one if there is any abnormality.

On the Car Belt Inspection

1. Check that the belt is not twisted or caught on anything.

2. After installing an anchor, check for free movement on its retaining bolt. If necessary, remove the bolt and check that the washers and other parts are not damaged or installed improperly (Front seat belt only).

3. Check the belts for fouling, damage or discoloration. Clean with a shop towel if fouled.

   CAUTION: Use only soap and water to clean.

4. Check that the belt does not lock when pulled out slowly. The belt is designed to lock only during a sudden stop or impact.

5. Make sure that the belt will retract automatically when released.

6. Replace the belt with a new one if there is any abnormality.

Replacement

1. Pry out the map light lens with a flat screwdriver.

2. Remove the screws, then remove the front map light.

3. Remove the 3 mounting screws from the mirror base, then remove the mirror assembly.

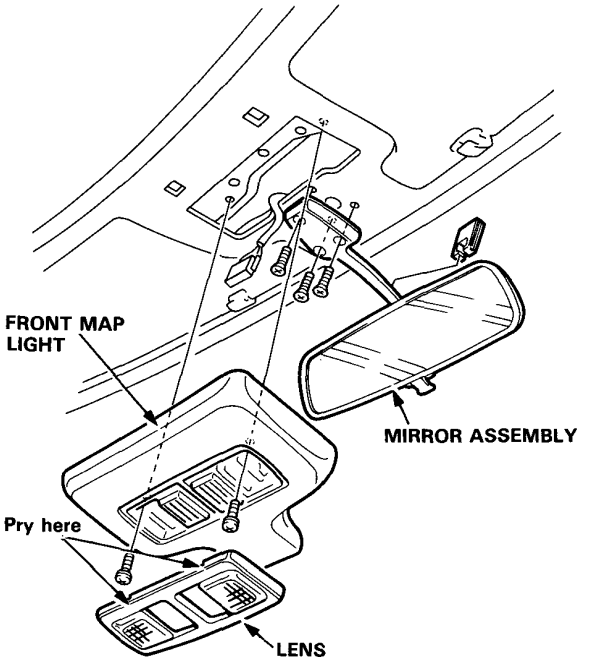

4. Remove the base from the bracket by removing the screw.

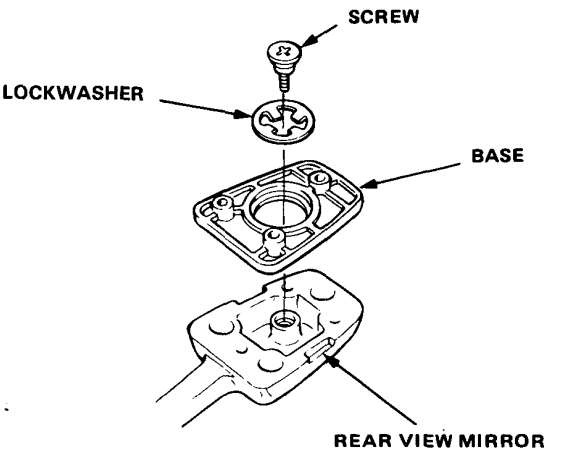

Console

Replacement

Disassemble in numbered sequence

NOTE:
- Lift up the parking brake lever.
- After removing the front console, disconnect the wire harness inside the console.
- For manual transmission models, remove the shift lever knob.

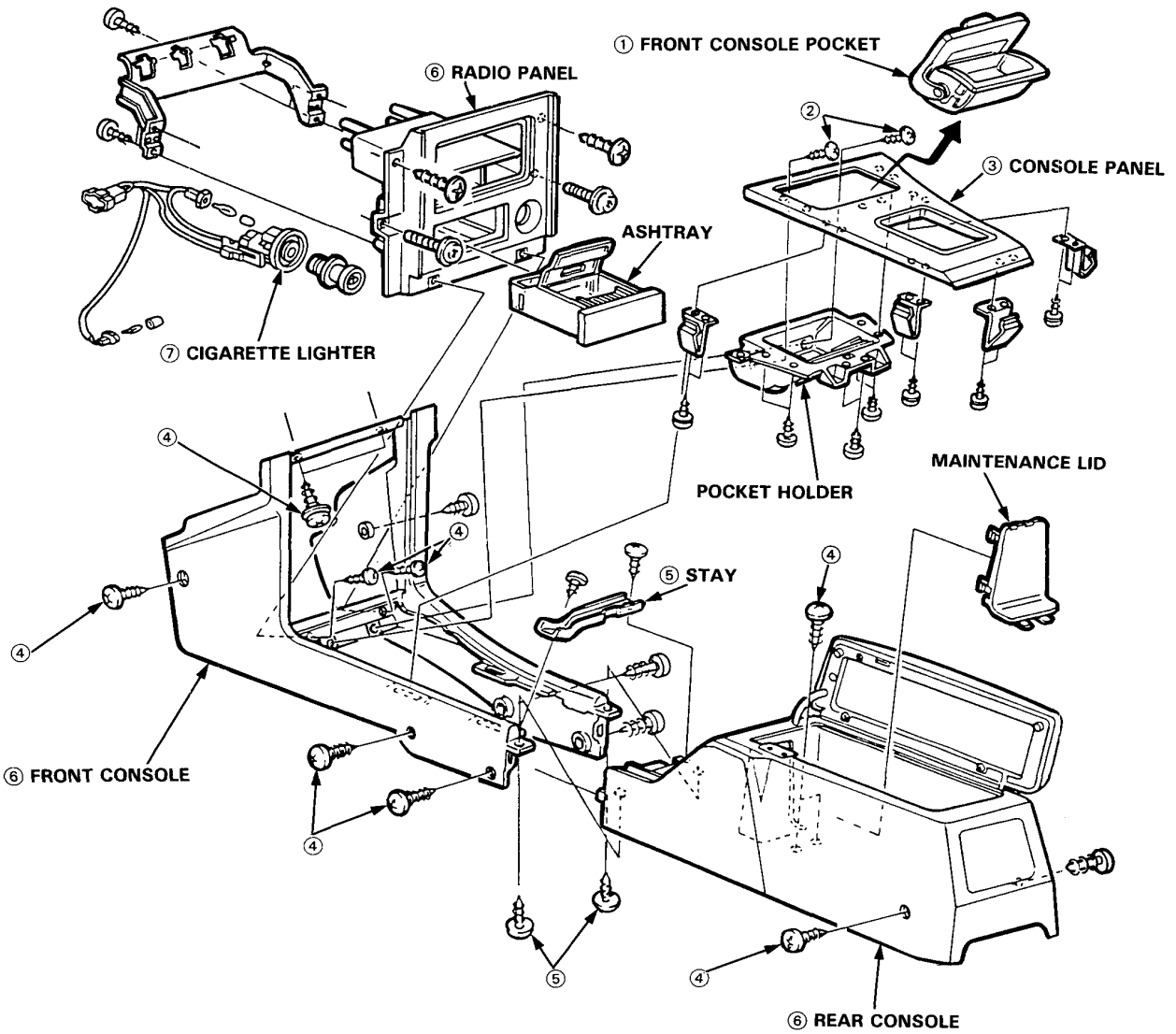

Carpet

Replacement

1. Remove:
   - Front seats.
   - Rear seat cushion.
   - Center console.
   - Right and left kick panels.
   - Door sill moldings.
   - Fuel lid opener.
   - Front seat belt lower anchor bolts.
   - Right and left quarter trim panel.
   - A/T control unit. (Automatic Transmission Only)

2. Pry out the clips at the rear edge and under the dashboard, peel off the tapes, pry off the retainers on each side and remove the carpet.

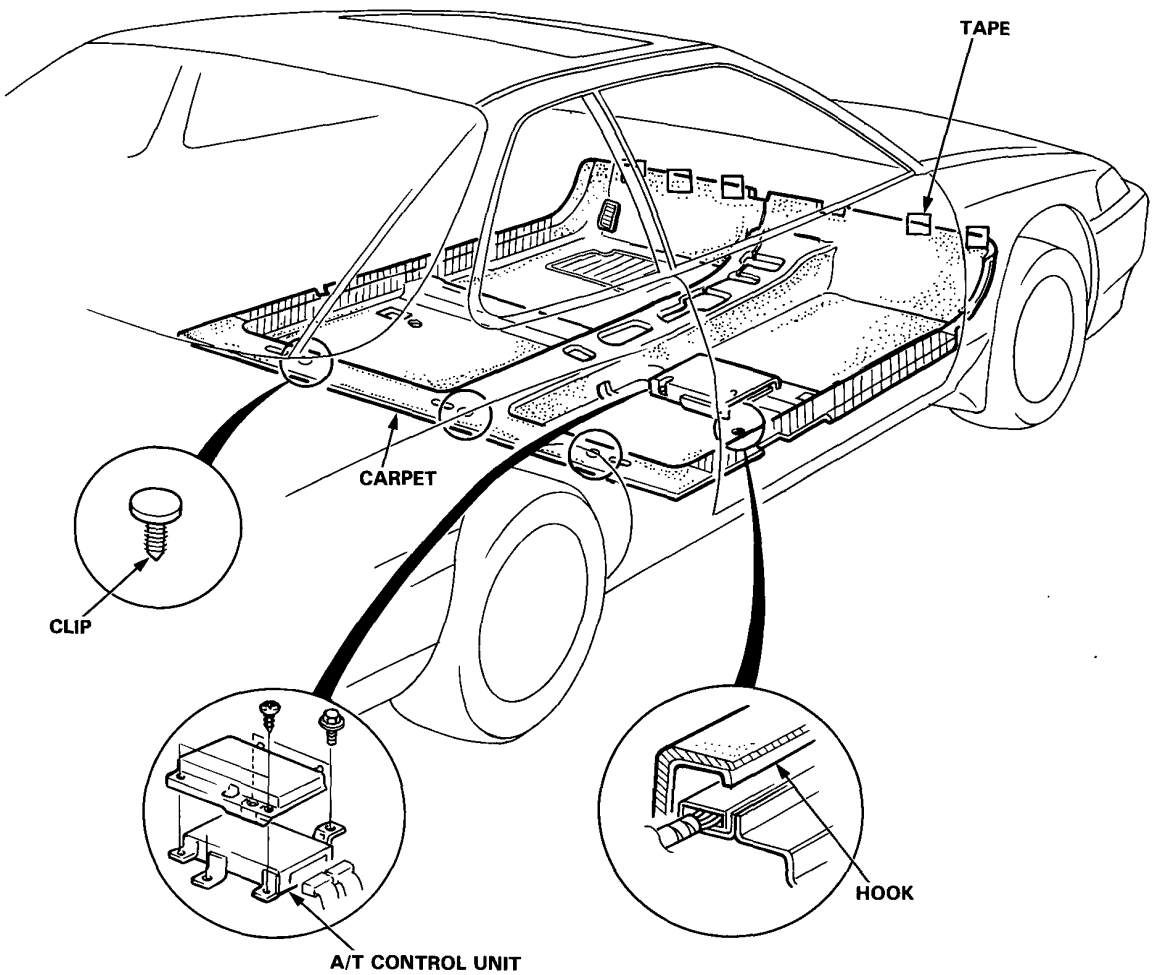

Components Removal/Installation

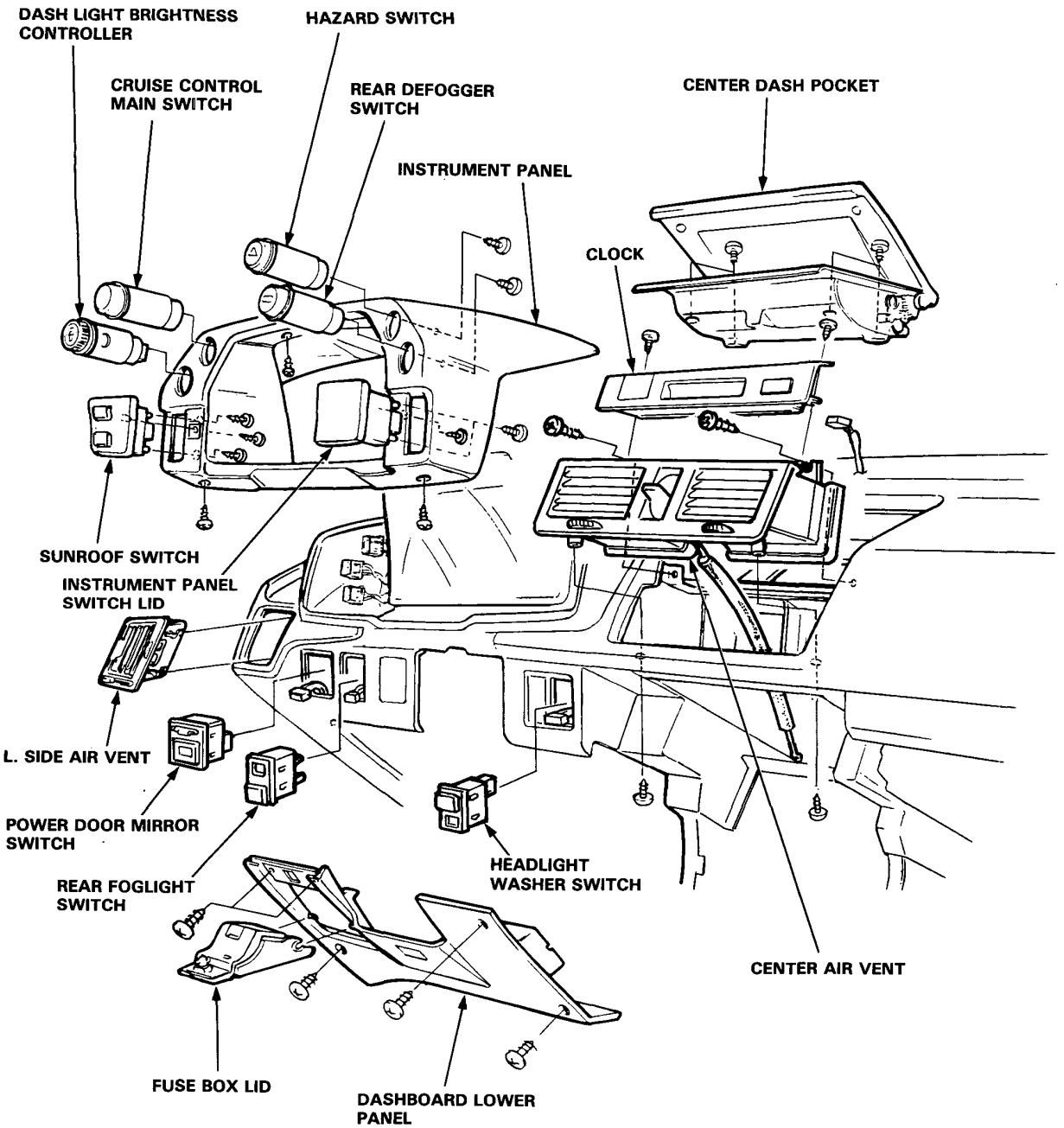

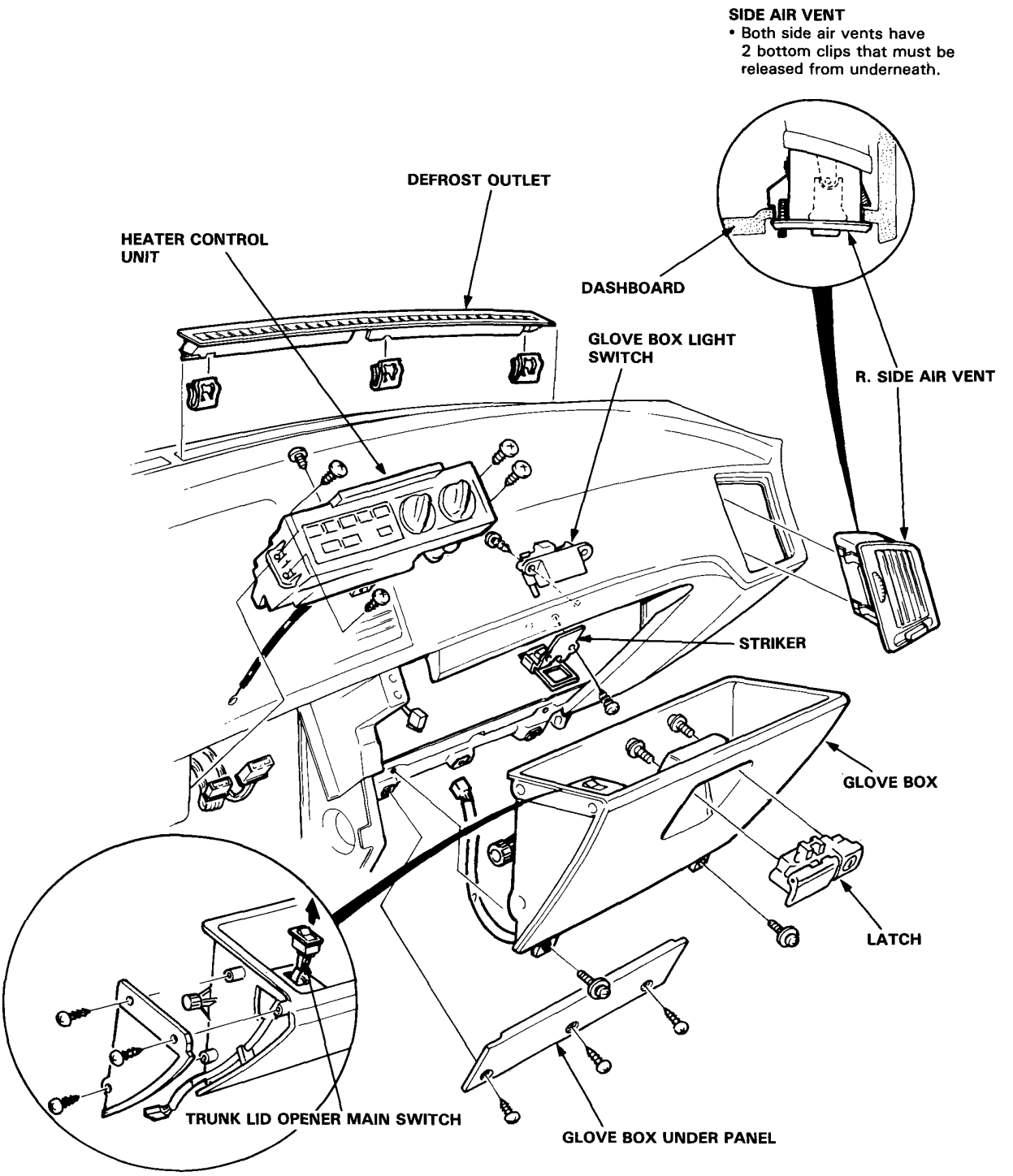
SIDE AIR VENT
• Both side air vents have 2 bottom clips that must be released from underneath.
DEFROST OUTLET
HEATER CONTROL UNIT
DASHBOARD
GLOVE BOX LIGHT SWITCH
R. SIDE AIR VENT
STRIKER
GLOVE BOX
LATCH
TRUNK LID OPENER MAIN SWITCH
GLOVE BOX UNDER PANEL

Replacement

1. To remove the dashboard, first remove the:
   - Steering wheel.
   - Dashboard lower panel.
   - Left air duct.
   - Console (page 14-52).
2. Disconnect the wire harnesses from the connector holder and fuse area.

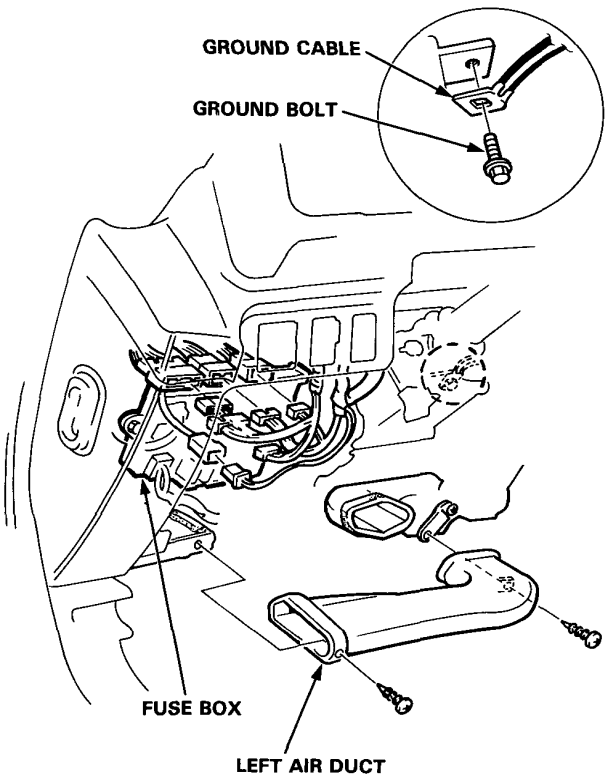

3. Remove the dash harness ground bolt from the steering column.
4. Remove the screws, radio panel then disconnect the wire connectors, antenna cables and wire tie.
5. Remove the radio assembly.

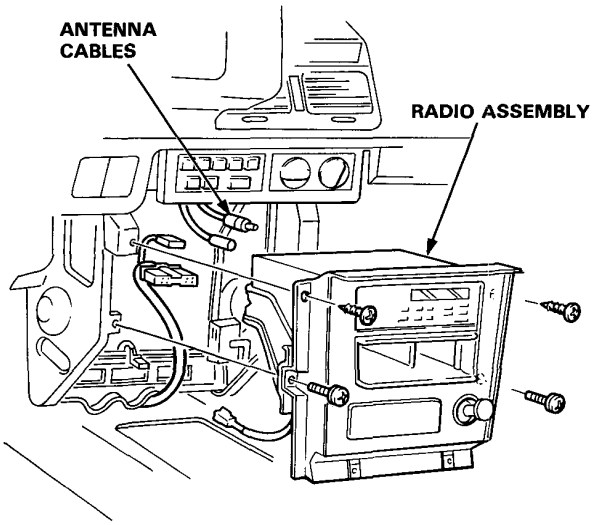

6. Disconnect the heater control cables.

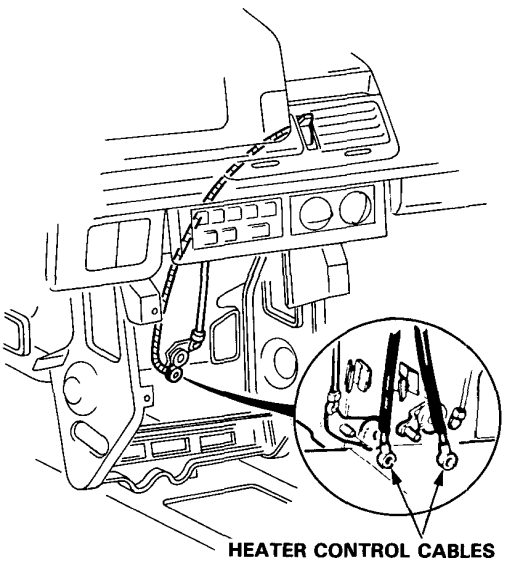

7. Remove the center dash pocket (page 14-54).

8. Lower the steering column.

9. Remove the dashboard mounting bolts.

10. Pull the dashboard straight back and disconnect the speedometer cable.

Reassembly NOTE:
- Make sure the dashboard fits onto the body correctly.
- Before tightening the dashboard bolts, make sure the instrument wires are not pinched, and that the dashboard is not interfering with the heater control cable.
- For ease of installation, remove gauge assembly from dash.

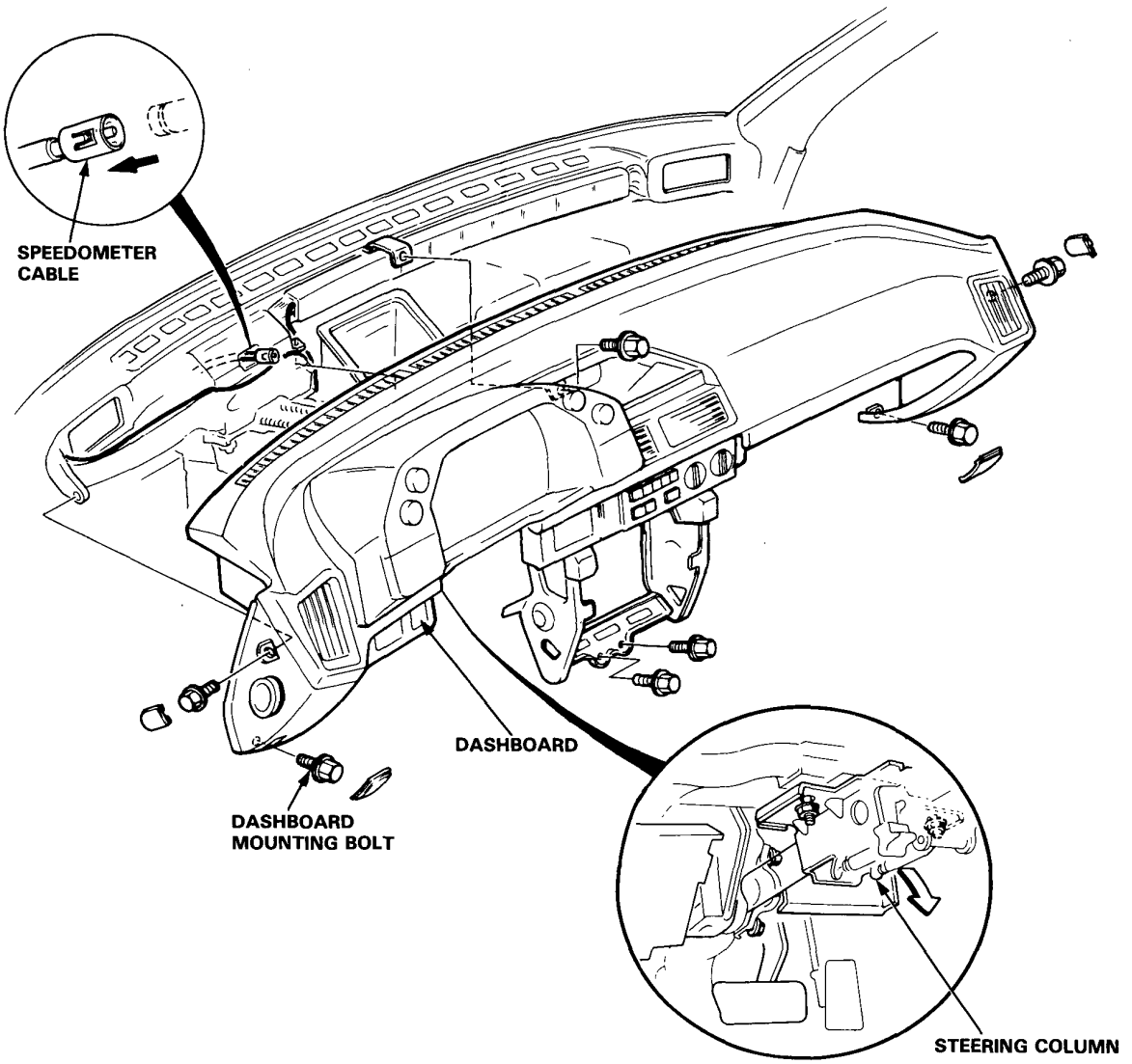

Front Bumper

Replacement

1. Remove the screw, then remove the ambient sensor and clip.
2. Remove the front side turn signal lights, then disconnect the wire harness.
3. Remove the 7 bumper lower mount bolts and the 4 bumper mount bolts.
4. Remove the bumper by sliding it forward.

If necessary:

5. Remove the bolts and nuts, then remove the front spoiler.
6. Remove the bumper brackets by removing the bracket mount bolts.
7. Remove the screws, then remove the mud guards.

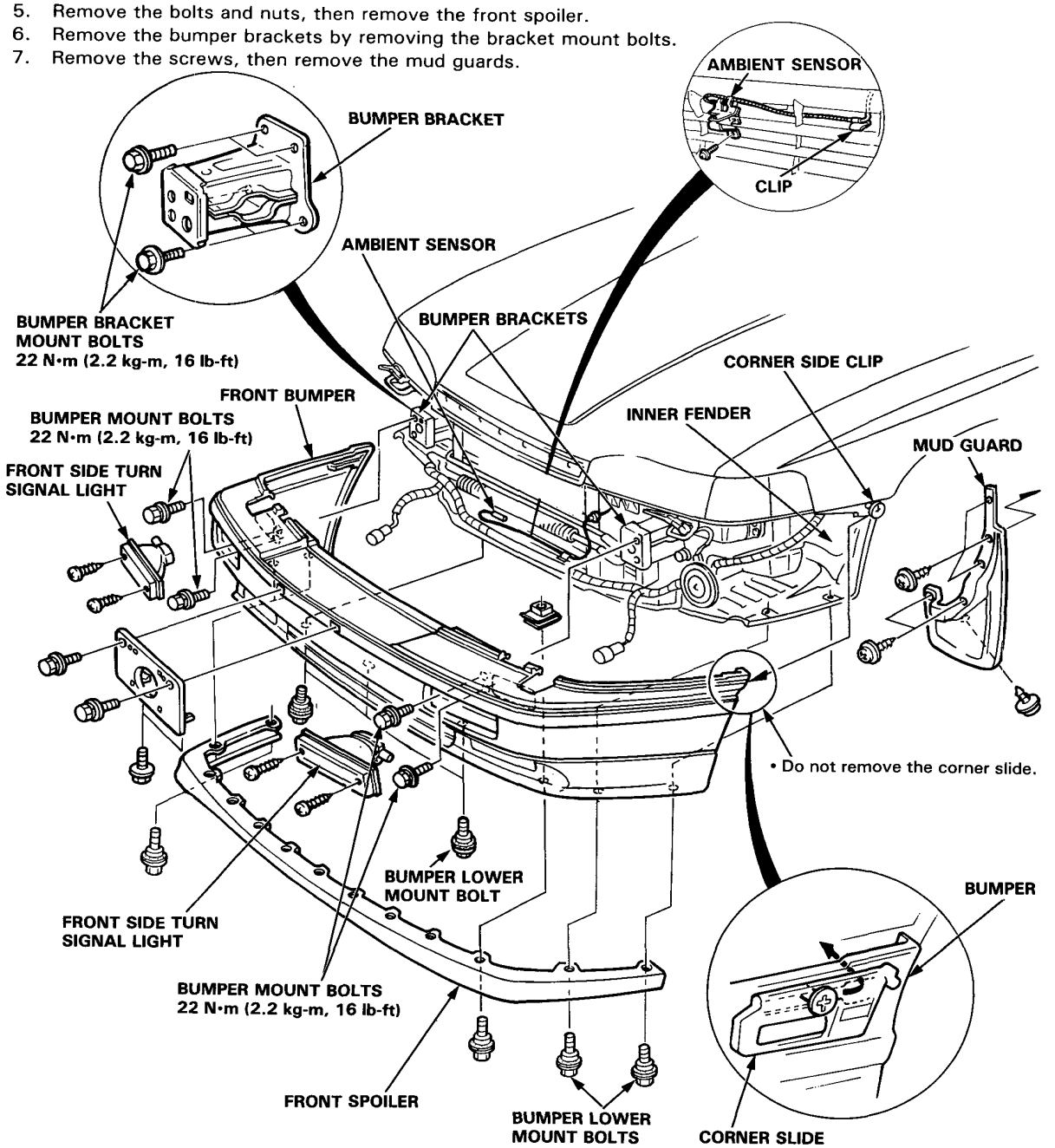

8. Installation sequence is essentially the revers order of removal.

Rear Bumper

Replacement

1. Remove the 2 bumper mount nuts and 3 screws in front of the bumper.
2. Remove the 2 bumper lower mount bolts.
3. Remove the 4 bumper mount bolts from the trunk area.
4. Disconnect the license light and rear fog light wire connectors and remove the bumper by sliding it to the rear.

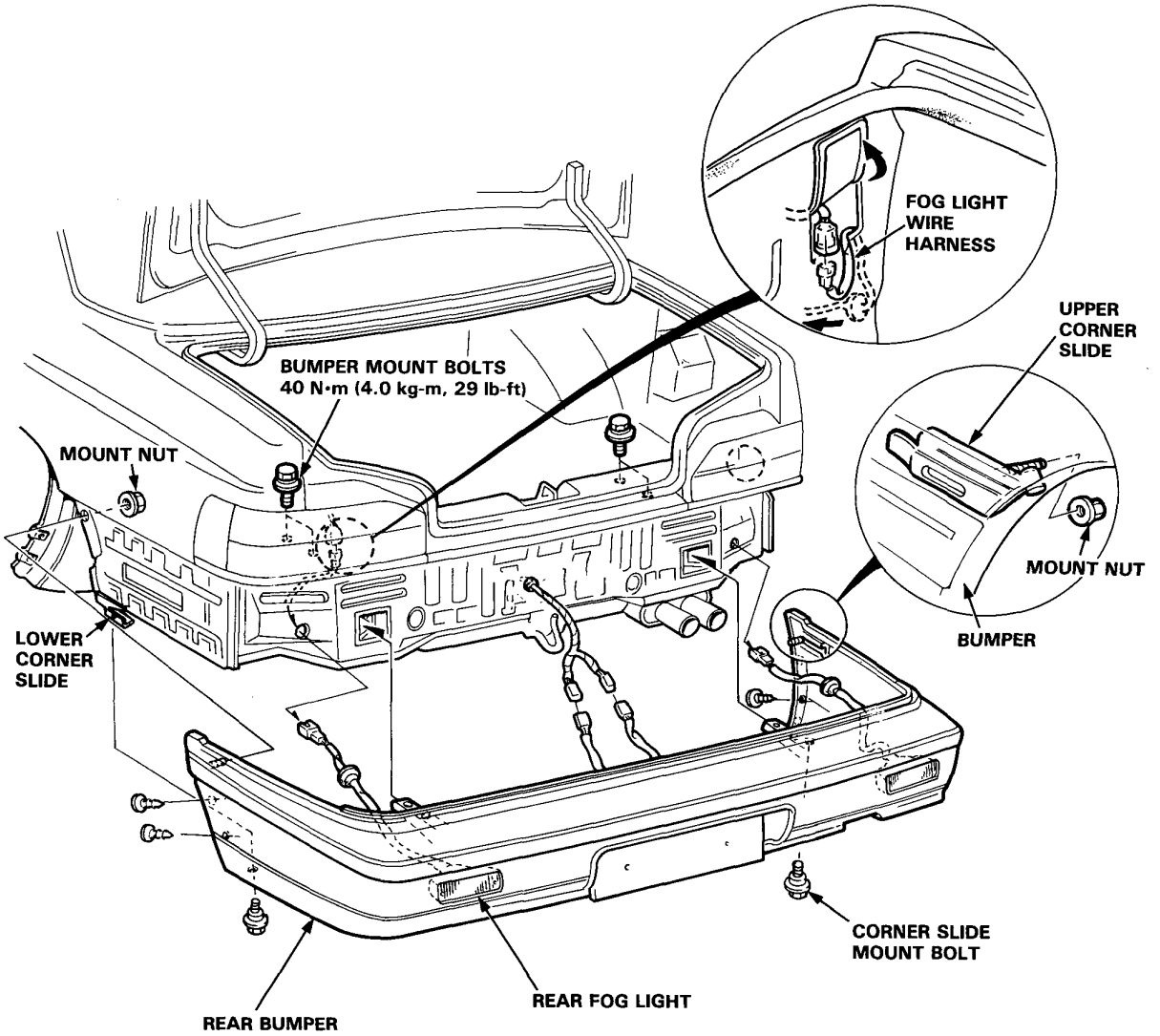

5. Installation sequence is essentially the revers order of removal.

Hood

Replacement/Adjustment

1. Pull the windshield washer hose out of the hood.
2. Hold the hood up and remove the bolts from both support strut mounts.
3. Remove the hinge mounting bolts, then remove the hood.
4. When installing the hood, don't tighten the hinge bolts until you've checked adjustments shown below.

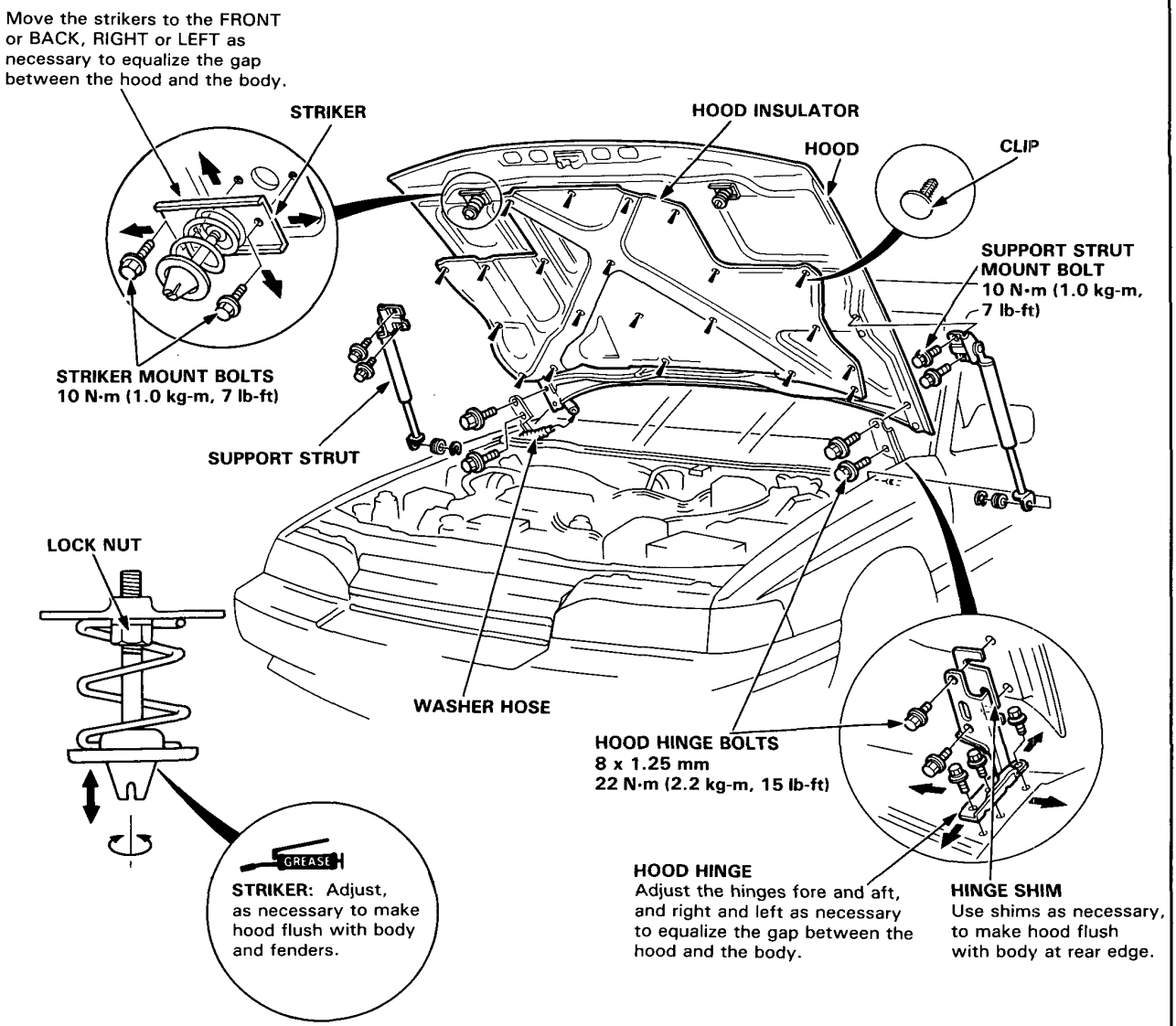

Opener and Latch Replacement

1. Remove the kick panel (page 14-42).
2. Remove the bolts, then remove the hood opener and disconnect the opener cables.
3. Remove the 2 bolts from each hood lock, then remove the hood locks and disconnect the opener cables.
4. Remove the inner fender, then pull out the opener cables.

   NOTE: Before pulling out the opener cables, tie strings to both ends so you can pull them back in later.

5. Remove the front grille and 2 condenser mount bolts.
6. Pull the condenser forward, then remove the hood latch mount bolts and nut, and the hood latch.

   NOTE: Do not drop bolts and nut.

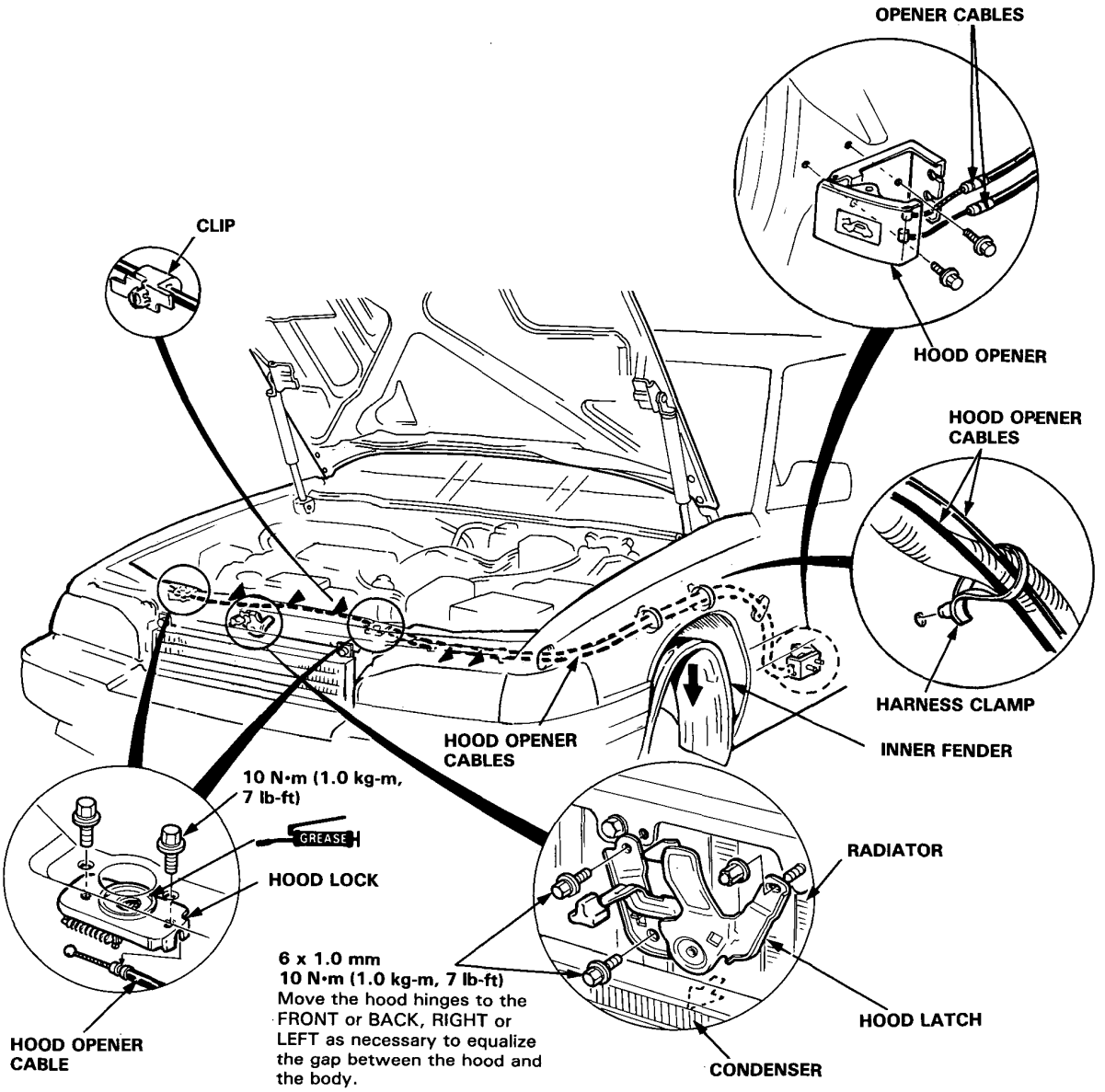

Lid Replacement/Adjustment

1. Remove the clips, then remove the trunk lid inner trim panel.
2. Pull the harness out of the trunk lid.

   NOTE: Before pulling out the wire harness, tie a string to the end of it so you can pull it back in when the trunk lid is reinstalled.

3. Remove the trunk lid hinge bolts, then lift off the lid.
4. Remove the torsion bar using a release tool.
5. Remove the rear shelf (page 14-42).
6. Remove the hinge bracket mounting bolts, then remove the hinges from the trunk.
7. Assemble in the reverse order.

   NOTE: Before tightening the hinge bolts, check the adjustments shown below:

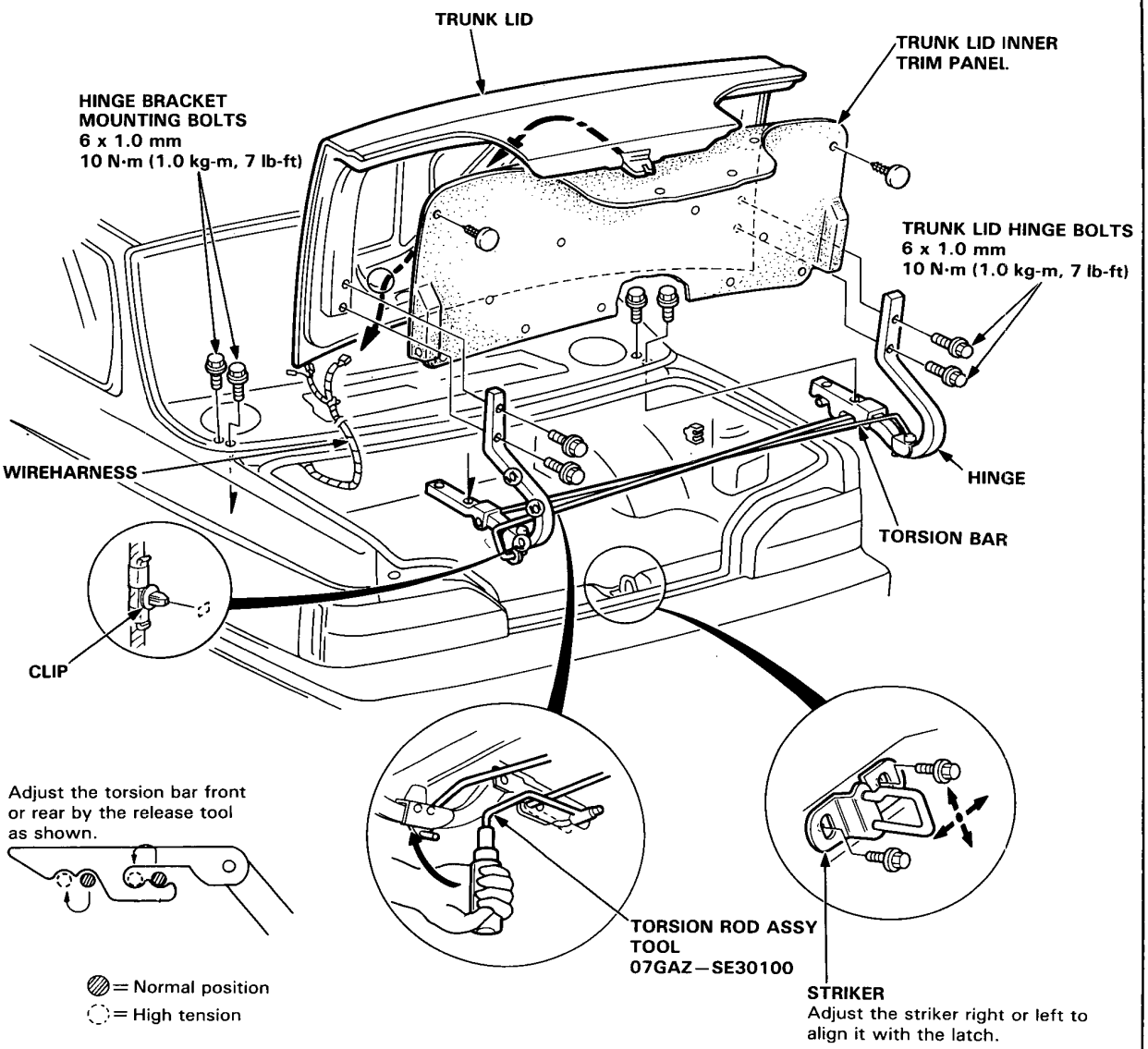

Fuel Filler/Trunk Opener

Replacement

1. To remove the fuel lid opener cables, remove the following parts:
   - Left side door sill molding, left half of floor mat.
   - Left quarter trim panel, and left trunk side panel.

2. Remove the screw and the release levers, then remove the opener cover. Remove the opener by removing the 2 bolts.

3. Remove the fuel lid lock by turning it 90°.

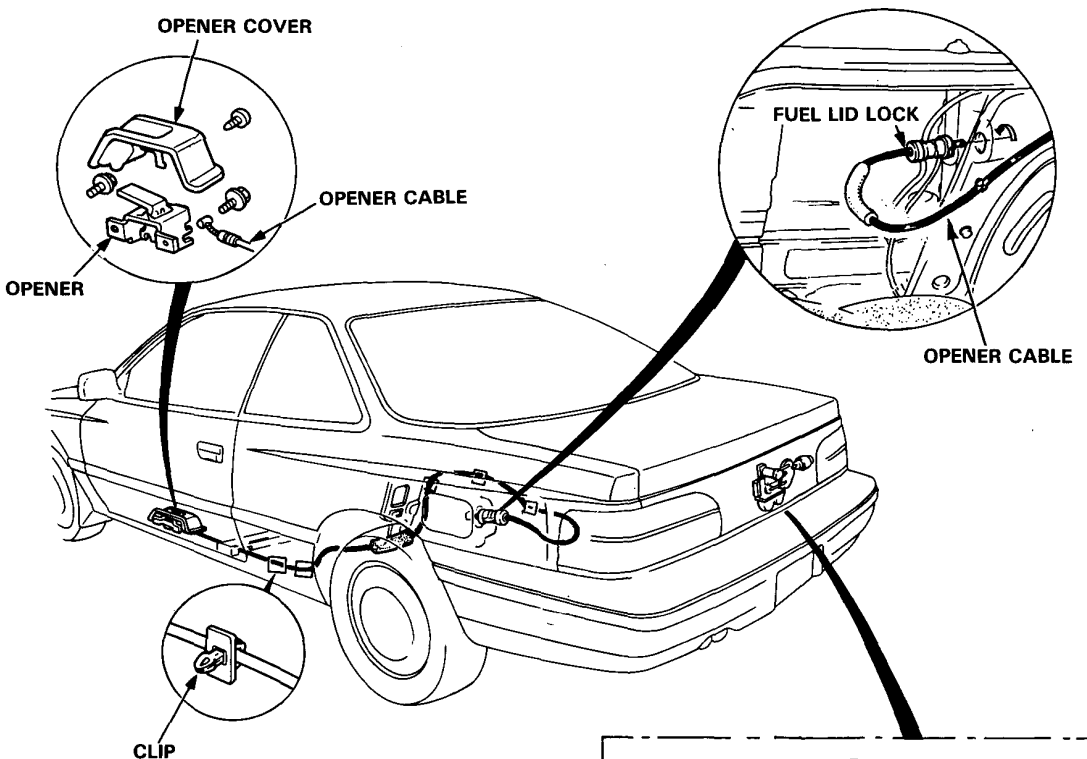

4. Remove the trunk lid inner trim panel and latch cover (page 14-62).

5. Disconnect the lock rod and wire connectors.

6. Remove the retainer, then remove the lock cylinder.

7. Remove the 7 bolts, then remove the latch, lock link and trunk lid opener solenoid all together.

8. To install,.reverse the removal procedure. Check that the fuel lid opener cable is routed and connected prperly.

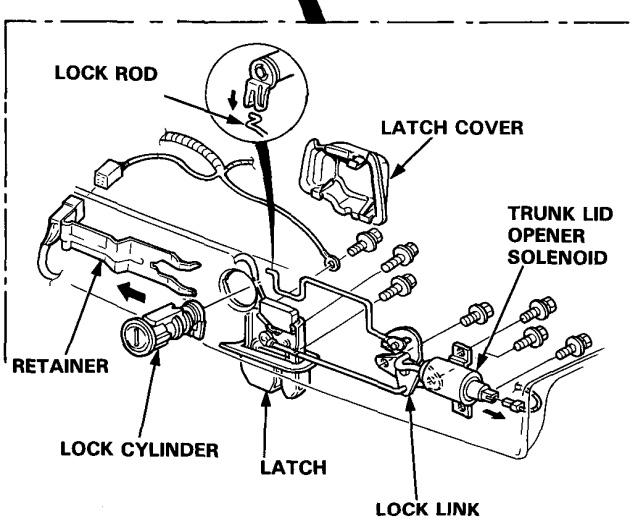

Side Window Moldings/Weatherstrip

Replacement

Disassemble in numbered sequence

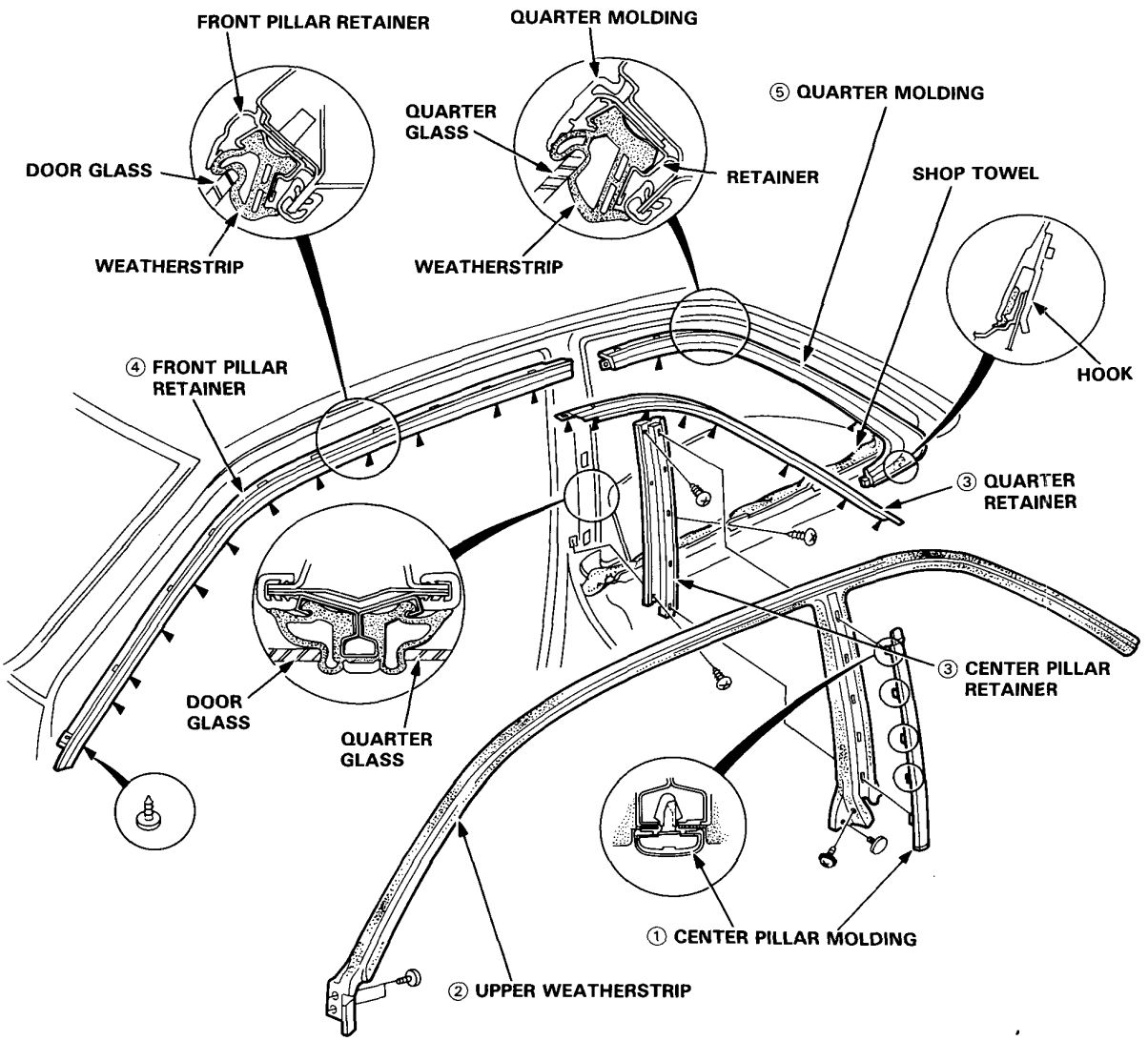

Grille/Side Molding

Front Grille/Molding Replacement

Disassemble in numbered sequence

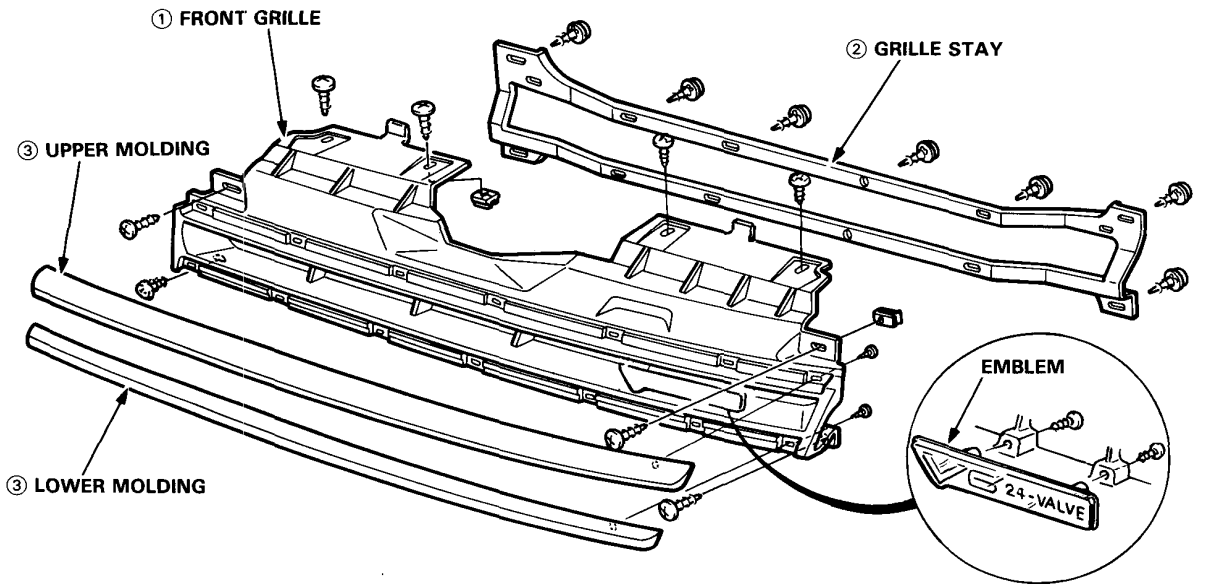

Side Molding Replacement

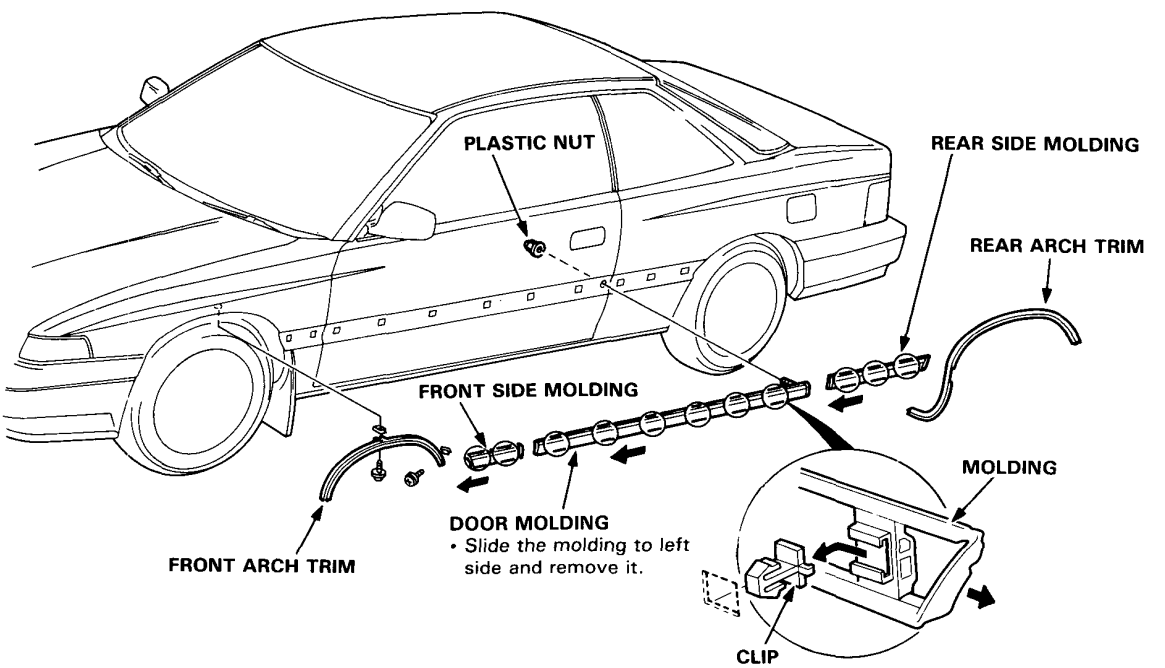

Frame Repair Chart

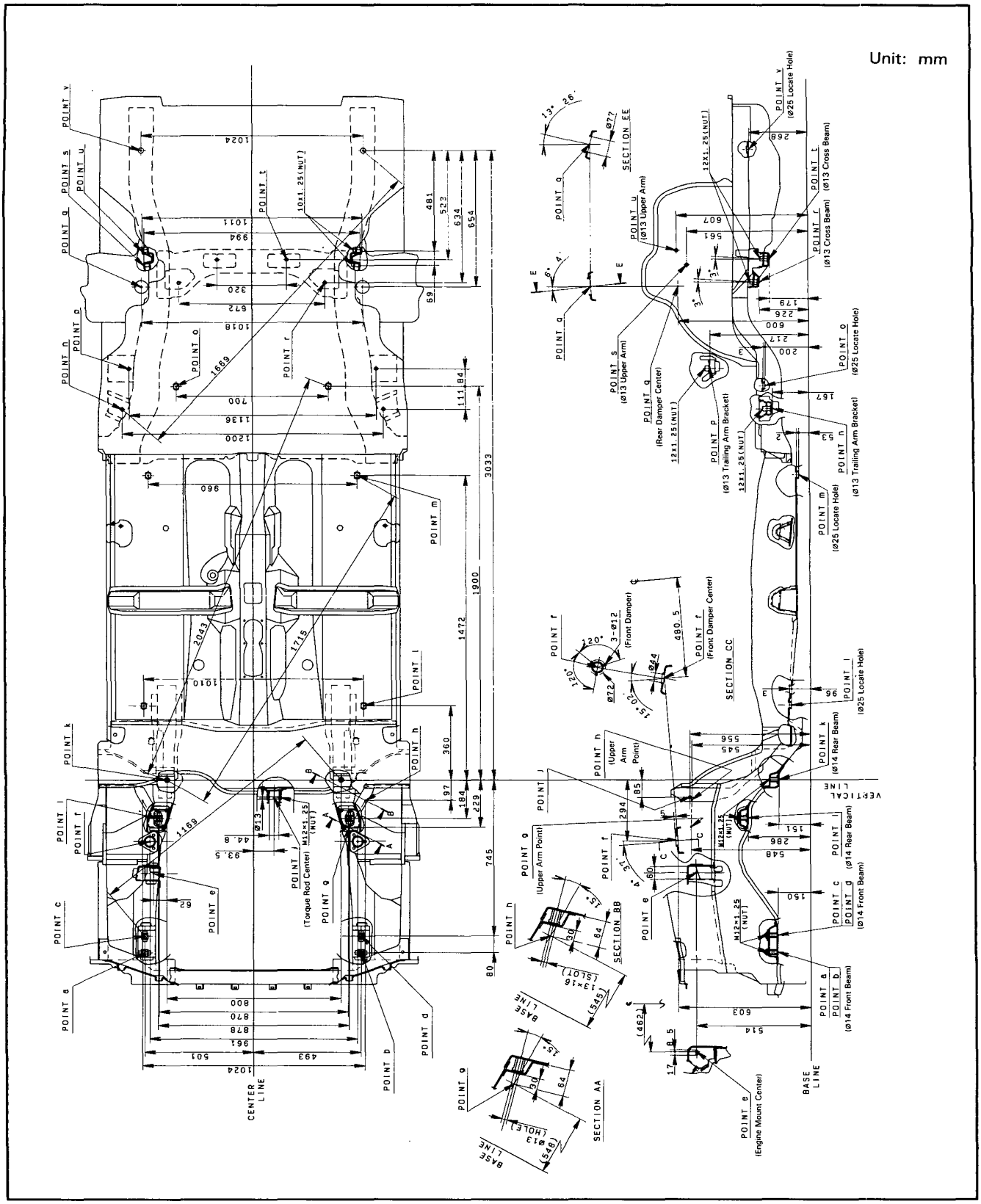

Illustrated Index

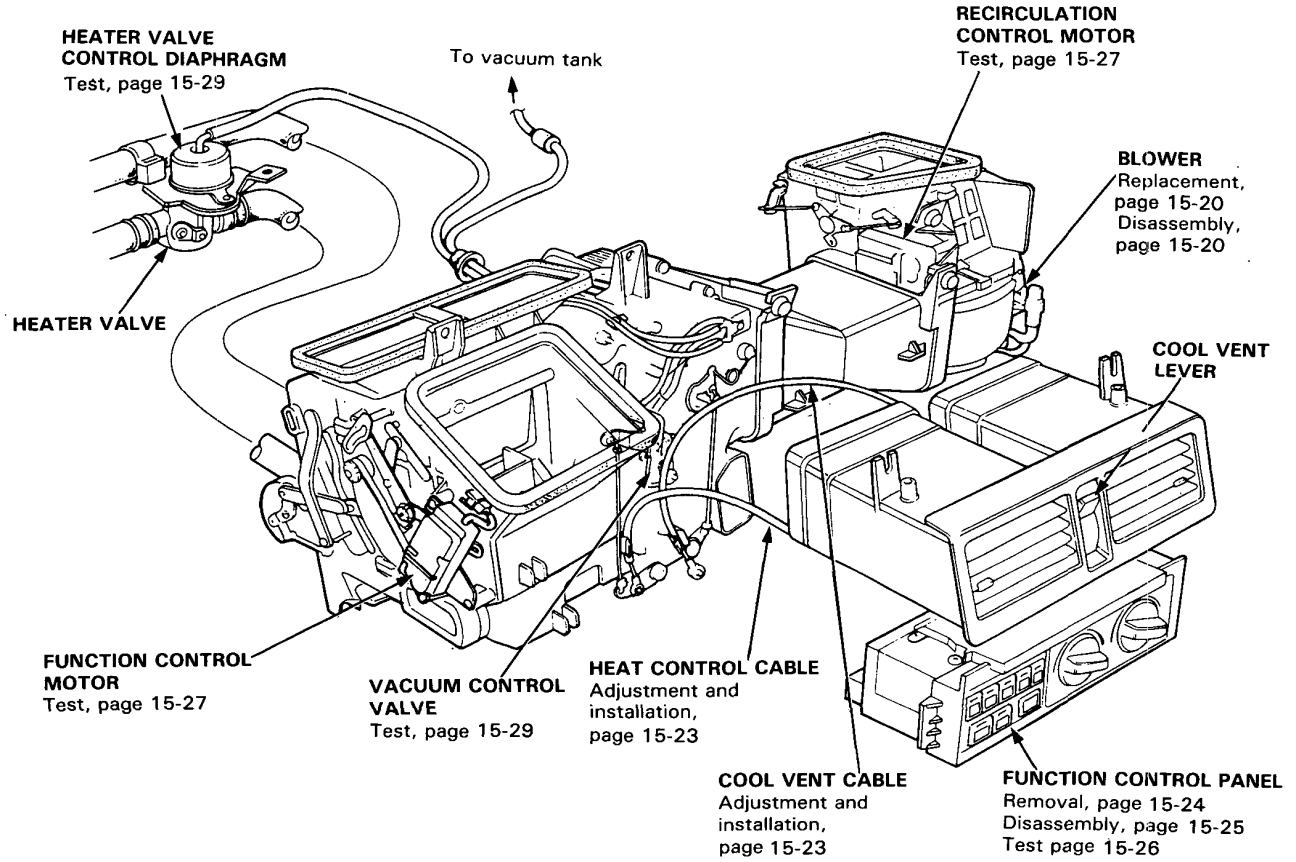

NOTE: LH Drive shown, RH Drive is similar.

System Description

TEMPERATURE CONTROL SYSTEM

A rotary dial on the control panel regulates both the air mix door and the flow of engine coolant to the heater core. Through a gear reduction and cam/lever mechanism, rotating the dial moves the heat control cable. Through linkage at the heater, the cable moves the air mix door and a vacuum control valve. The control valve, in turn, regulates vacuum to a diaphragm-controlled engine coolant valve. Rotating the dial from "MAX COOL" toward "HOT" sends vacuum to the vacuum comtrol valve and heated engine coolant to the heater core and air throught the core, to heat the car.

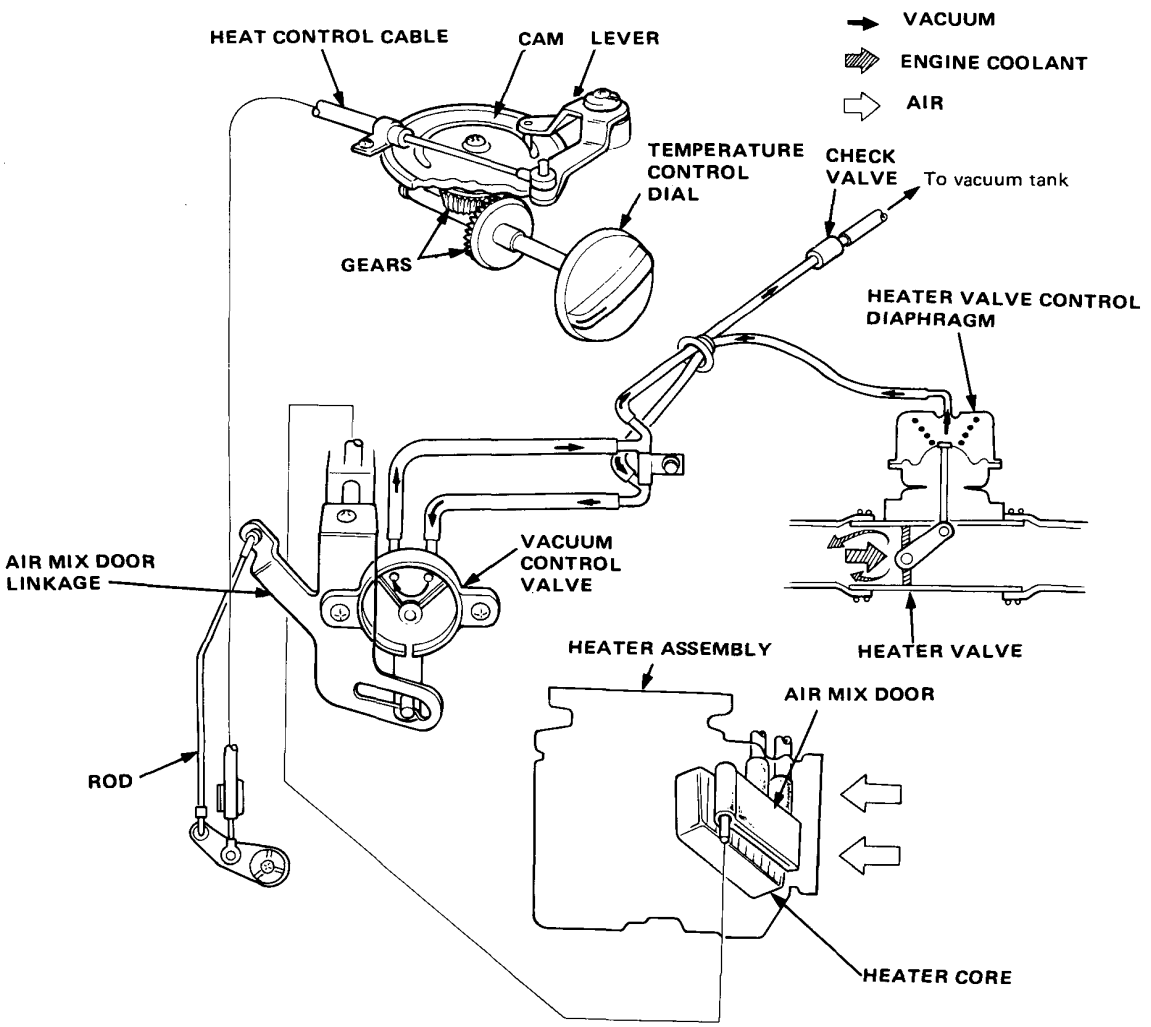

Heater Door Positions

Front View

Side View

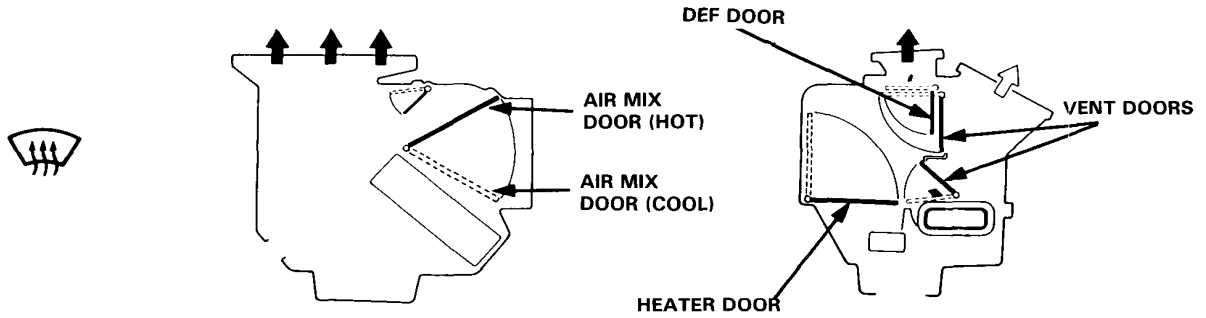

(H/DEF)

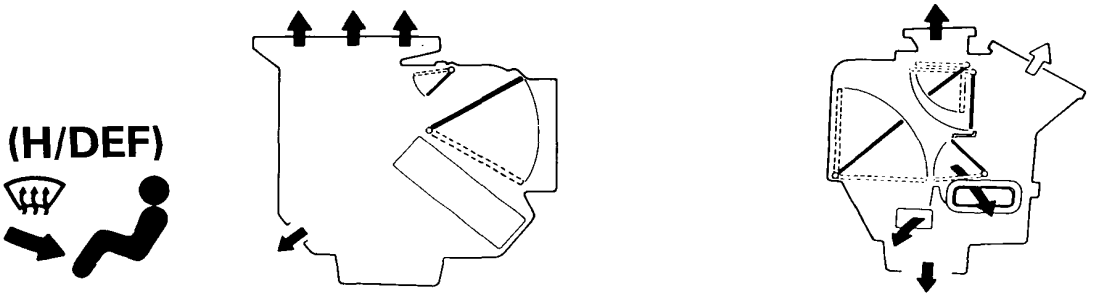

(HEAT)

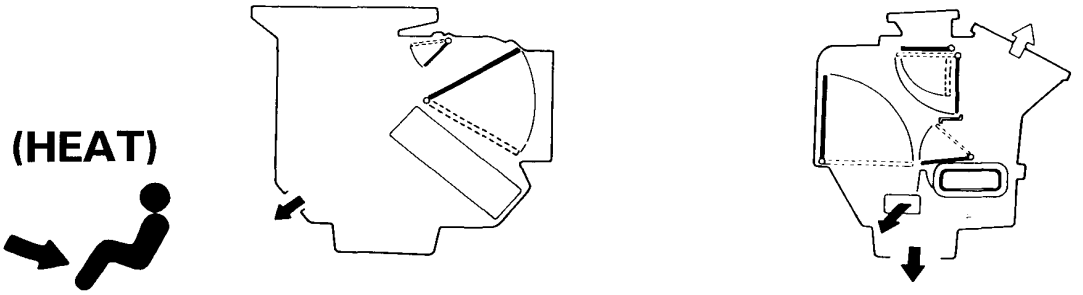

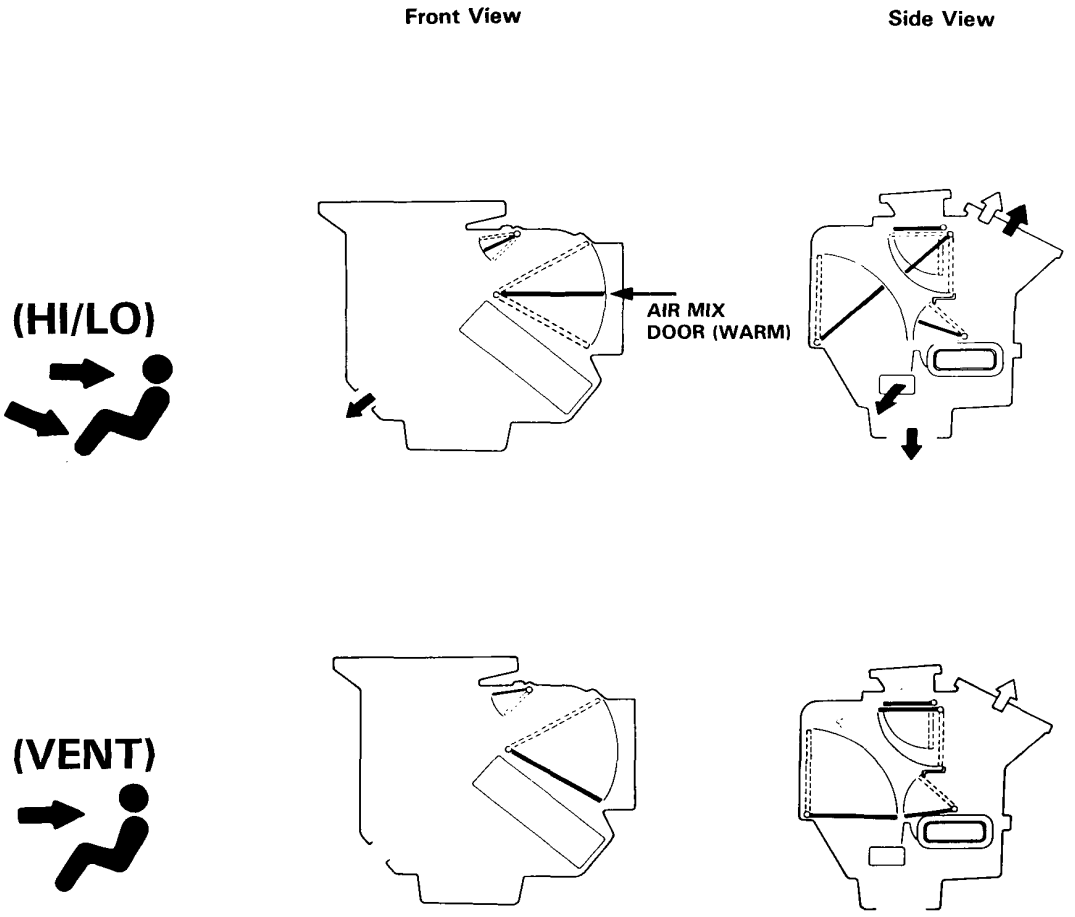

NOTE: This diagram shows the air mix door in the most appropriate position for each heater position. The position of the air mix door is controlled by the temperature control and is independent of the heater control position.

Circuit Diagram

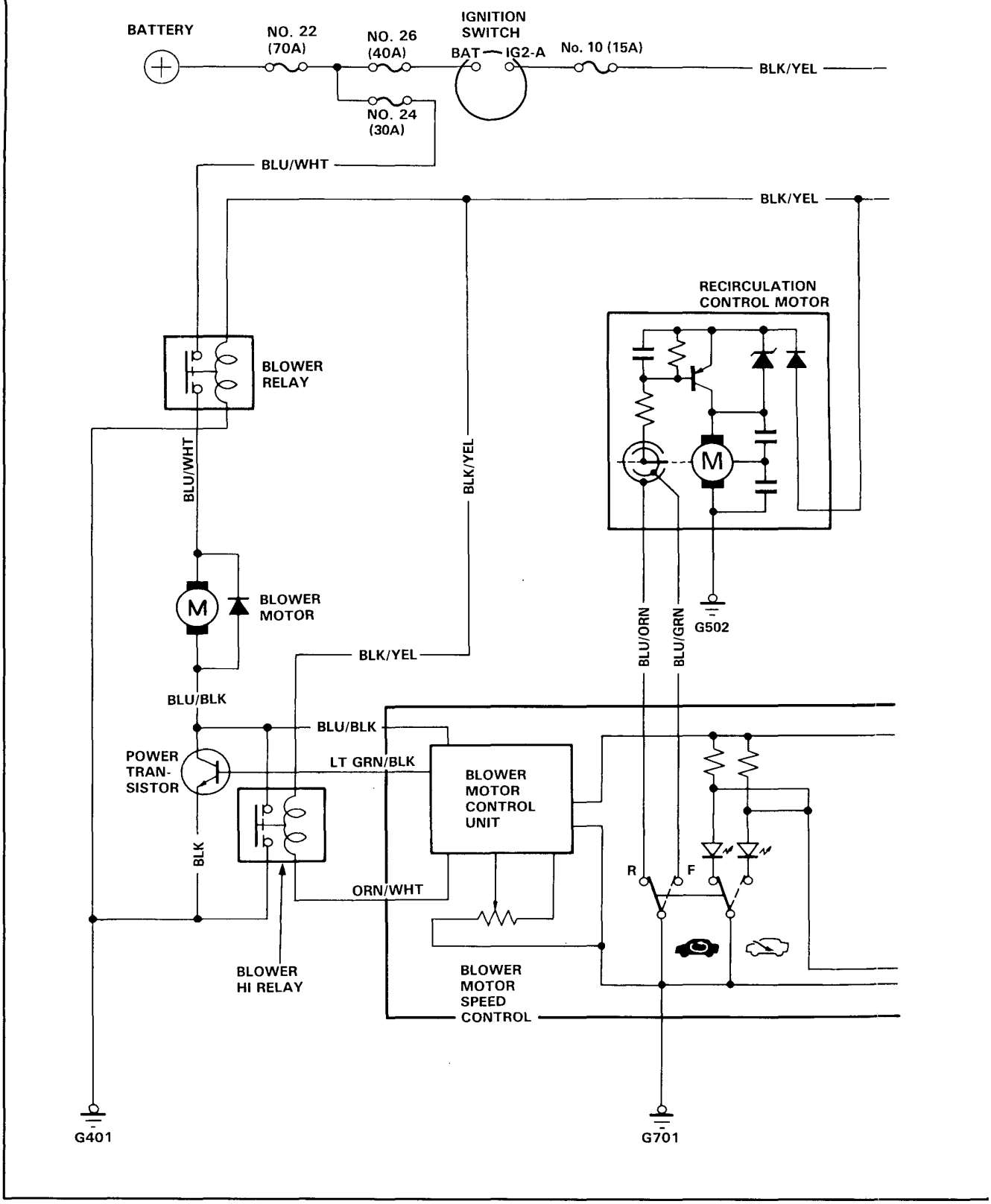

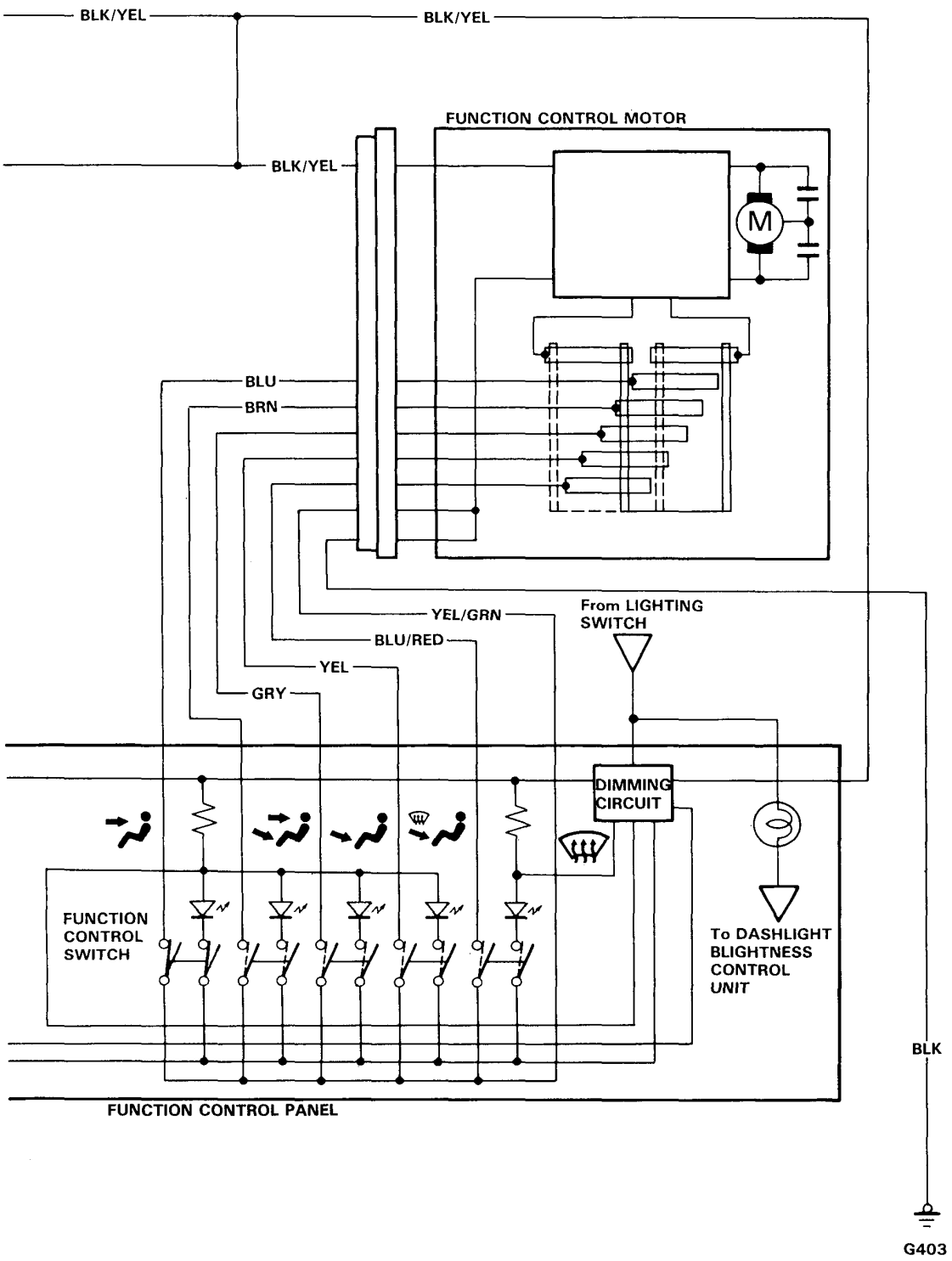
BLK/YEL
BLK/YEL
FUNCTION CONTROL MOTOR
BLK/YEL
M
BLU
BRN
YEL/GRN
BLU/RED
YEL
GRY
From LIGHTING SWITCH
DIMMING CIRCUIT
FUNCTION CONTROL SWITCH
To DASHLIGHT BLIGHTNESS CONTROL UNIT
BLK
FUNCTION CONTROL PANEL
G403

Troubleshooting

Symptom Chart

SYMPTOM		REMEDY
No hot air flow	Blower motor does not run	Perform the flowchart (page 15-9)
	Blower motor runs	Check followings: • Clogged blower outlet • Clogged heater valve • Faulty air mix door • Out of air mix cable adjustment • Faulty thermostat (section 5)
Hot air flow is low	Blower speed does not change	Perform flow chart (page 15-14)
	Blower runs properly	Check followings: • Clogged blower outlet • Incorrect door position
Function does not change	Function control motor does not run	Perform flow chart (page 15-18)
	Function control motor runs	Check for the heater door linkage.
Recirculation door does not change	Recirculation motor does not run	Perform flow chart (page 15-16)
	Recirculation motor run	Check for the door linkage or perform flow chart (page 15-16).

NOTE: Use digital circuit tester (07411—0020000) to check.

Flow Chart —— Blower

NOTE: Use the digital circuit tester (07411—0020000) to check.

Blower motor does not run at all.

Inspect the No. 22 (70A), No. 24 (30A), No. 26 (40A) and No. 10 (15A) fuses.

Is the fuses OK?

NO → **Replace fuse(s).**

YES

Disconnect the blower relay 4P connector from the blower motor.

Turn the ignition switch ON.

Measure voltage between BLU/-WHT(1) terminal (+) and body ground (–).

Is there battery voltage?

NO → **Repair open in BLU/WHT(1) wire between blower relay and ignition switch.**

YES

Measure voltage between BLK/-YEL terminal (+) and body ground (–).

Is there battery voltage?

NO → **Repair open in BLK/YEL wire between blower relay and ignition switch.**

YES

(To page 15-10)

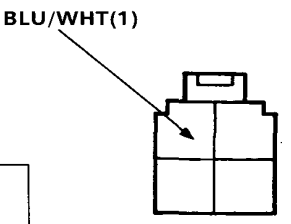

View from wire side.

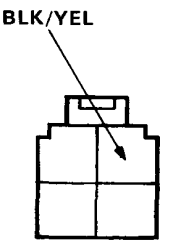

View from wire side.

(cont'd)

Flow Chart — Blower (cont'd)

(From page 15-9)

Inspection the blower relay (page 15-28).

Is the blower relay OK?

NO → **Replace the blower relay and retest.**

YES

Reconnect the blower relay, then connect a jumper wire between the BLK terminal and body ground.

Does blower motor run?

YES → **Repair open in BLK wire between the blower relay and body ground or poor ground (G401).**

NO

Turn the ignition switch OFF.

Disconnect the 2P connector from the blower motor.

Turn the ignition switch ON.

Measure voltage between BLU/-WHT terminal (+) and body ground (–).

Is there battery voltage?

NO → **Repair open in BLU/WHT wire between blower motor and blower relay.**

YES

Turn the ignition switch OFF.

Reconnect the 2P connector to the blower motor.

(To page 15-11)

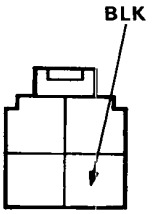

View from wire side.

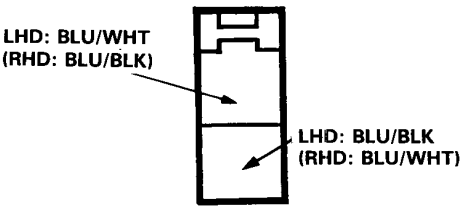

View from wire side.

(From page 15-10)

Connect a jumper wire between the BLU/BLK terminal and body ground. Turn the ignition switch ON.

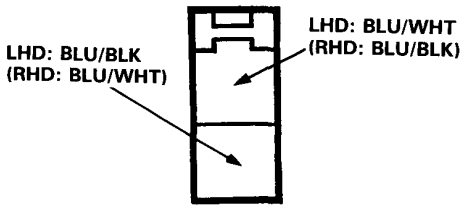

View from wire side.

Does blower motor run?

NO → **Replace the blower motor and retest.**

YES

Turn the ignition switch OFF.

Disconnect the blower hi relay 4P connector.

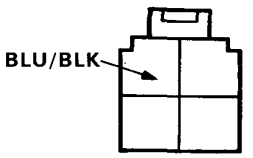

View from wire side.

Turn the ignition switch ON.

Connect a jumper wire between the BLU/BLK terminal (+) and body ground.

Does blower motor run?

NO → **Repair open in BLU/BLK wire between blower motor and blower hi-relay.**

YES

Connect a jumper wire between the BLU/BLK terminal and BLK terminal.

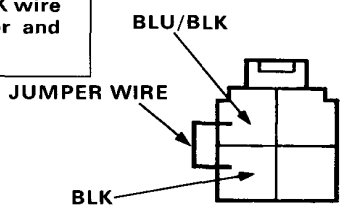

View from wire side.

Does blower motor run?

NO → **Repair open in BLK wire between blower hi-relay and body ground or poor ground (G401).**

YES

(To page 15-12)

(cont'd)

Flow Chart — Blower (cont'd)

(From page 15-11)

Measure voltage between BLK/YEL (+) terminal and body ground.

Is the battery voltage?

NO → **Repair open in BLK/YEL wire between ignition switch and blower hi-relay.**

YES

Inspect blower hi-relay (page 15-28).

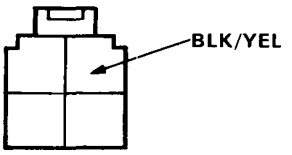

View from wire side.

Is the blower hi-relay OK?

NO → **Replace the blower hi-relay and retest.**

YES

Turn the ignition switch OFF.

Reconnect the 4P connector to the blower hi-relay.

Disconnect the 16P connector from the function control panel.

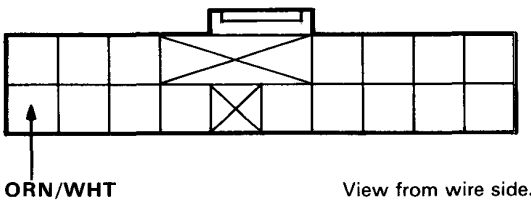

View from wire side.

Connect a jumper wire between the ORN/WHT terminal and body ground.

(To page 15-13)

(From page 15-12)

Turn the ignition switch ON.

Does the blower motor run?

NO → **Repair open in ORN/WHT wire between blower hi-relay and function control panel.**

YES

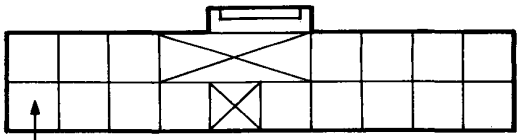

View from wire side.

Check for continuity between BLK terminal and body ground.

Is there continuity?

NO → **Repair open in BLK wire between function control panel and body ground or poor ground (G701).**

YES

Replace the function control panel and retest.

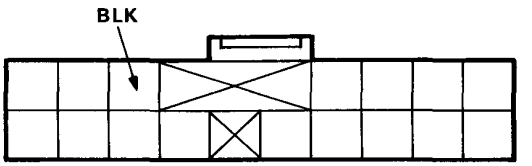

View from wire side.

(cont'd)

Flow Chart — Blower (cont'd)

NOTE: Use the digital circuit tester (07411—0020000) to check.

Blower motor running speed does not change.

Turn the ignition switch OFF.

Disconnect the 3P connector from the power transistor.

Measure voltage between LT GRN/BLK (+) terminal and body ground.

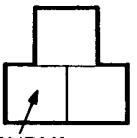

View from wire side.

Turn the ignition switch ON.

Blower motor speed control switch ON. (center position).

Is there battery voltage?

NO → Turn the ignition switch OFF. → Disconnect the 16P connector from the function control panel

YES

Inspect the power transistor (page 15-28).

Is the power transistor OK?

NO → **Replace the power transistor and retest.**

YES

Check for continuity from BLK terminal and body ground.

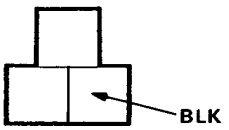

View from wire side.

Is there continuity?

NO → **Repair open in BLK wire between power transistor and body ground or poor ground (G401).**

YES

Replace the function control panel and retest.

(To page 15-15)

(From page 15-14)

Measure voltage between BLU/BLK(+) terminal and body ground. Turn the ignition switch ON.

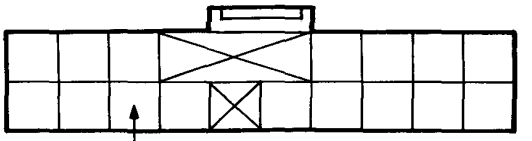

View from wire side.

Is there battery voltage?

NO → **Repair open in BLU/BLK wire between function control panel and blower motor.**

YES

Turn the ignition switch OFF.

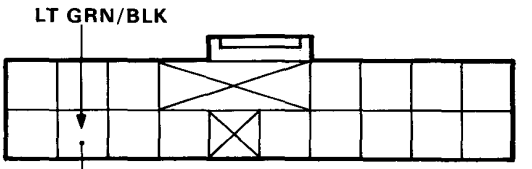

Check for continuity from LT GRN/BLK terminal and power transistor LT GRN/BLK terminal.

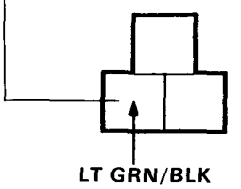

View from wire side.

Is there continuity?

NO → **Repair open in LT GRN/BLK wire between function control panel and power transistor.**

YES

Check for continuity from BLK terminal and body ground.

Is there continuity?

NO → **Repair open in BLK wire between function control panel and body ground or poor ground (G701).**

YES

Replace the function control panel and retest.

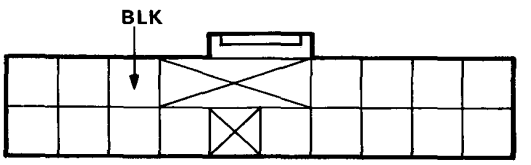

View from wire side.

Flow Chart — Reciriculation Control

NOTE: Use the digital circuit tester (07411—0020000) to check.

Recircuration control door does not change between FRESH and REC.

Inspect the No. 10 (15A) fuse.

Is the No. 16 fuse OK?
- NO → **Replace the No. 10 fuse.**
- YES ↓

Push the FRESH button and turn the ignition switch ON.

Does the motor run all the time?
- YES → **• Repair short in BLU/ORN wire between recirc. motor and switch. • Replace the control switch.**
- NO ↓

Turn the ignition switch OFF.

Push the REC button and turn the ignition switch ON.

Does the motor run all the time?
- YES → **• Repair short in BLU/GRN wire between recirc. motor and switch. • Replace the control switch.**
- NO ↓

Turn the ignition switch OFF.

Disconnect the 6P connector from the recirc. motor at the bottom of the blower assembly.

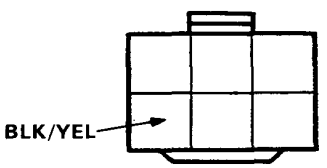

View from wire side.

Turn the ignition switch ON.

Measure the voltage between the BLK/YEL (+) and body ground

Is there battery voltage?
- NO → **Repair open in BLK/YEL wire between the fuse box and recirc. motor.**
- YES ↓

Turn the ignition switch off and reconnect the 6P connector.

(To page 15-17)

(From page 15-16)

Connect the BLU/ORN and BLU/GRN terminals to the body ground. Turn the ignition switch ON.

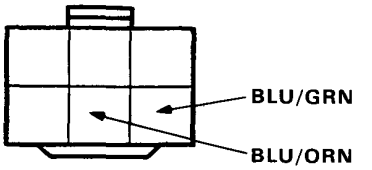

View from wire side.

Does the motor run all the time?

- NO → **Replace the recirculation control motor and retest.**
- YES ↓

Turn the ignition switch OFF. Remove the function control panel and disconnect the 16P connector.

Connect the BLU/GRN and BLU/ORN terminals to BLK terminal using a jumper wire.

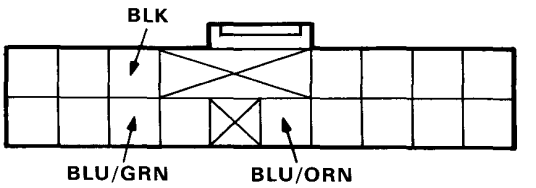

View from wire side.

Does the motor run all the time?

- YES → **Replace the function control panel and retest.**
- NO ↓

Check for continuity between the BLK terminal and body ground.

Is there continuity?

- NO → **Repair open in BLK wire between the function control panel and body ground or poor ground (G401).**
- YES ↓

Repair open in BLU/ORN and/or BLU/GRN wire(s) between the function control panel and recirculation control motor.

Flow Chart — Function Control

NOTE: Use the digital circuit tester (07411—0020000) to check.

Function control motor does not run.

Inspect the No. 10 (15A) fuse.

Is the No. 10 fuse OK?
- NO → **Replace the No. 10 fuse.**
- YES ↓

Disconnect the 8P connector from the function control motor.

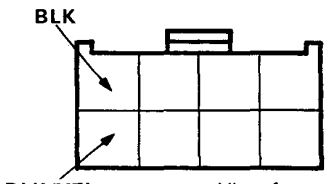

View from wire side.

Turn the ignition switch ON.

Measure voltage between BLK/YEL terminal and body ground.

Is there battery voltage?
- NO → **Repair open in BLK/YEL wire between heater control and fuse box.**
- YES ↓

Turn the ignition switch OFF.

Check for continuity from BLK terminal to body ground.

Is there continuity?
- NO → **Repair open in BLK wire between the function control motor and body ground or poor ground (G403).**
- YES ↓

Inspect the function control motor (page 15-27)

Is the function control motor OK?
- NO → **Replace the function control motor and retest.**
- YES ↓

(To page 15-19)

(From page 15-18)

Disconnect the 16P connector from the function control panel.

Check for continuity at each wire (YEL, GRY, BRN, YEL/GRN, BLU/RED or BLU) between the 8P and 16P connectors.

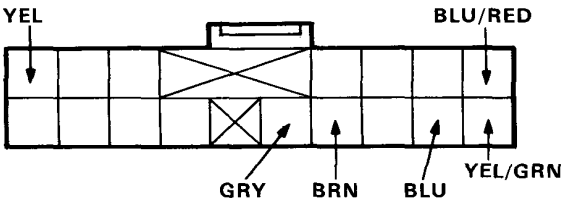

View from wire side.

Does continuity exist?

NO → **Repair open YEL, GRY, BRN, YEL/GRN, BLU/RED and/or BLU wire(s).**

YES

Check for continuity from each wire (YEL, GRY, BRN, YEL/GRN, BLU/RED or BLU) to body ground.

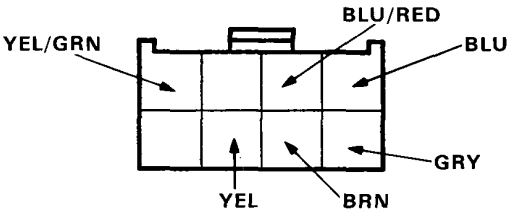

View from wire side.

Is there continuity?

YES → **Repair short to body ground in wire.**

NO

NOTE: If any of the wires are shorted to ground, the function control motor will not change positions.

Check for continuity between BLK terminal to body ground.

Is there continuity?

NO → **Repair open in BLK wire or poor ground (G403).**

YES

Replace the function control panel.

Blower

Replacement

1. Disconnect the battery negative terminal.
2. Remove the screws (3), then remove the glove box lower cover.
3. Remove the screws (2), then remove the glove box.
4. Remove the screws (4) and tapping screws (5), then remove the glove box frame, clips (2), and side heater duct.
5. With automatic climate control system: Discharge the refrigerant very slowly from the climate control system (page 15-86).
6. Remove the evaporator (page 15-83) or heater duct.
7. Disconnect the wire connectors from the blower.
8. Remove the mounting bolts (3) from the blower.
9. Remove the blower.
10. Install the blower in the reverse order of removal making sure there is no air leakage.

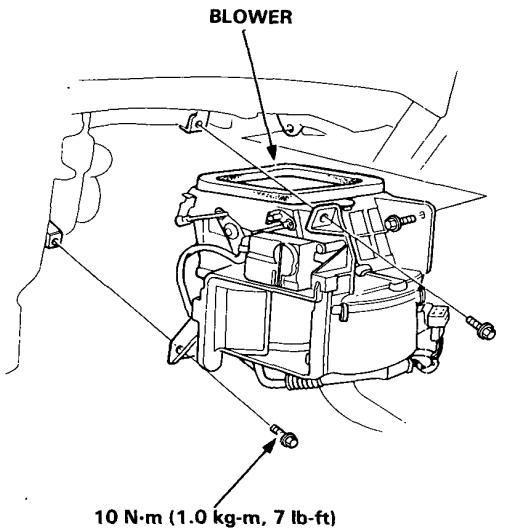

Disassembly

NOTE:
- Before reassembly, make sure that the air door and linkage moves smoothly without binding.
- When re-attaching the actuator, make sure its positioning will not allow the air door to be pulled too far. Attach the actuator and all linkage, then apply battery voltage and watch the door movement. If necessary, loosen the holding screw and move the actuator up or down.

To adjust the control rod:
Connect the REC control motor connector to the main wire harness, push the FRESH/REC switch to "FRESH" and open the air doors. Then connect the control rod to the arm while holding the air doors open.

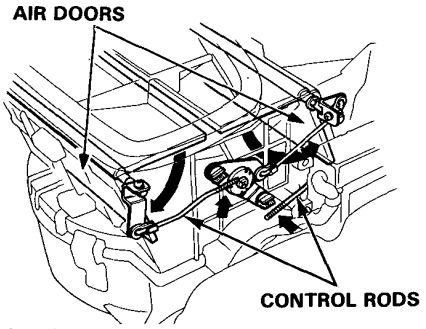

NOTE: LH Drive shown, RH Drive is similar.

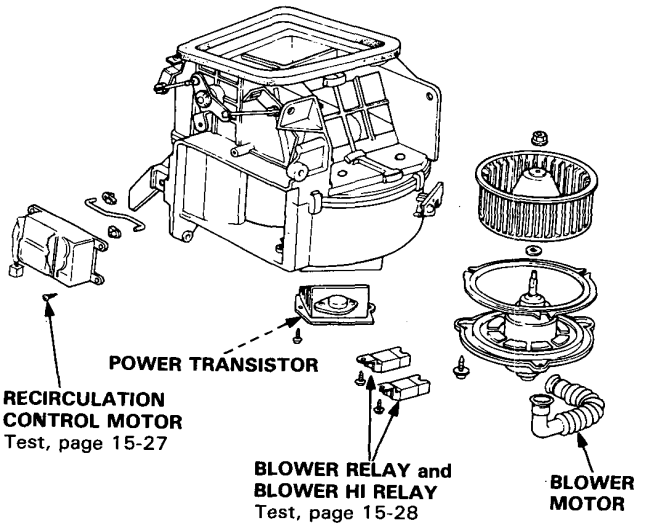

Heater Assembly

Replacement

1. Drain coolant in the radiator (section 5).
2. *Disconnect the heater hoses at the heater.*

   NOTE: Coolant will run out when the hoses are disconnected; drain it into a clean drip pan.

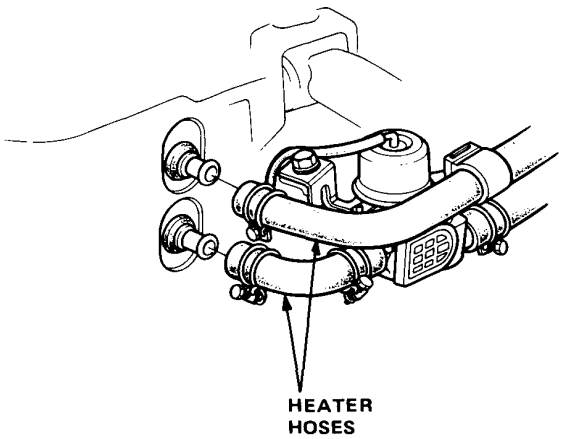

3. Remove the dashboard (section 14).
4. Disconnect the wire harness and vacuum hoses.

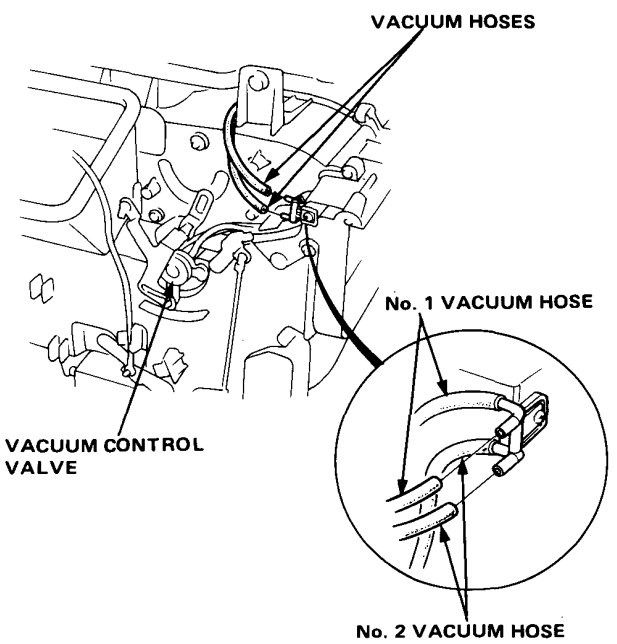

5. Remove the heater mounting bolts (2) and mounting nuts (2), then pull the heater away from the body.

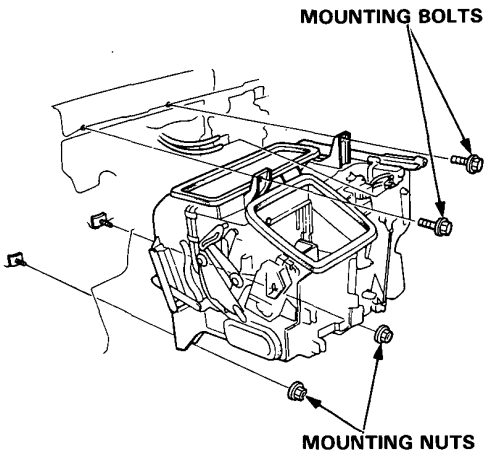

Install in the reverse order of removal, and:

- Apply a sealant to the grommets.
- Do not interchange the inlet and outlet hoses. Make sure that the hose clamps are secure.
- Loosen the bleed bolt on the engine and refill the radiator and reservoir tank with the proper coolant mixture.
  Tighten the bleed bolt when all the trapped air has escaped and coolant begins to flow from it.
- Connect all cables and make sure they are properly adjusted (page 15-23).
- Connect the vacuum hose properly and check the hose for bends, breakage, or pinching.

Heater Assembly

Overhaul

1. Remove the heater assembly.

2. Remove the self-tapping screws and retaining plates.

3. Pull out the heater core from the heater housing.
   Remove the function control motor if necessary.
   Remove the vacuum control valve and vacuum joint if necessary.

   Install in the reverse order of removal and:
   Loosen the bleed bolt on the engine and refill the radiator and reservoir tank with the proper coolant mixture. Tighten the bleed bolt when all the trapped air has escaped and coolant begins to flow from it.

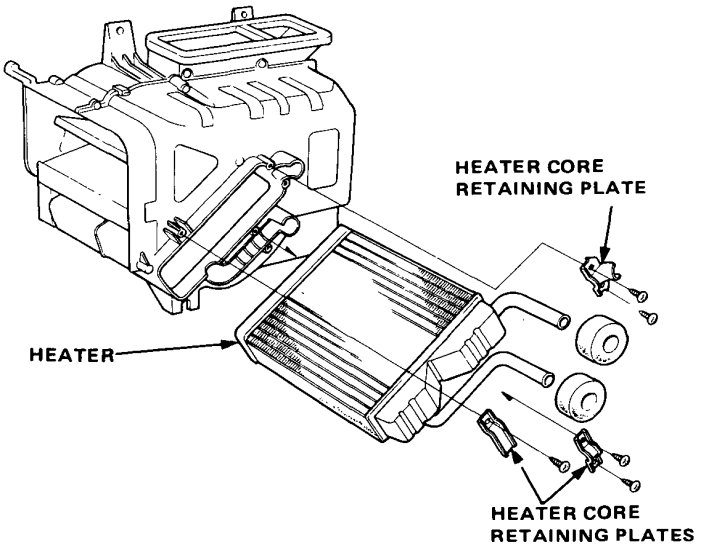

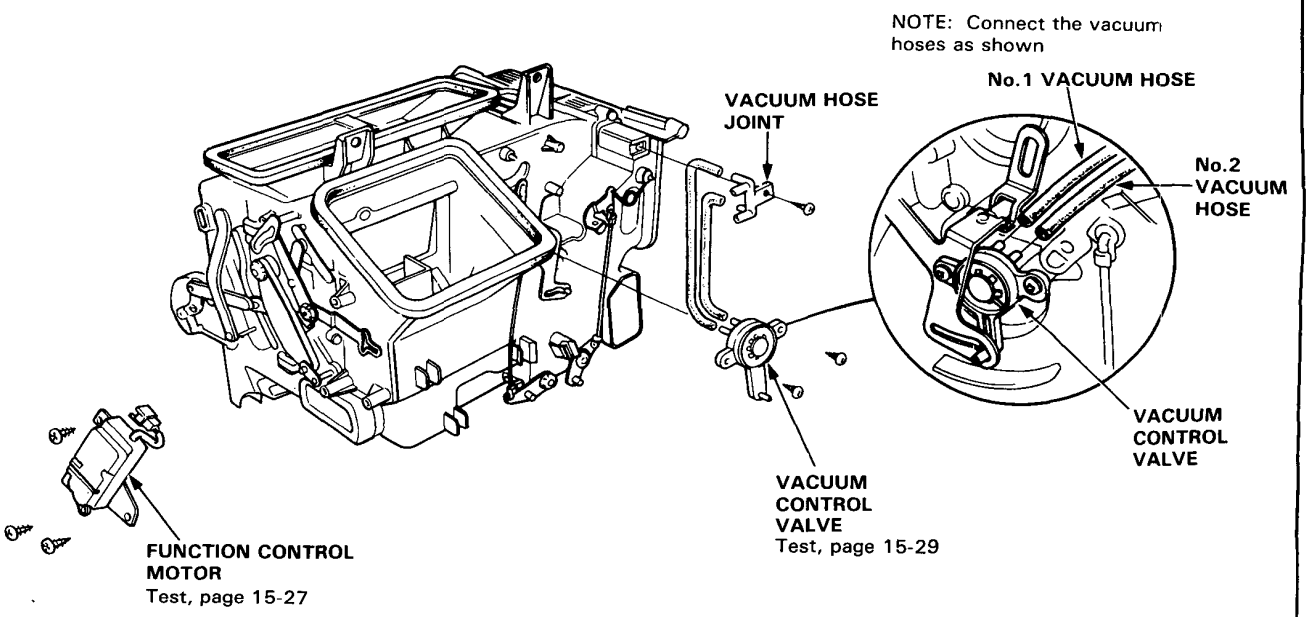

Cable Adjustment and Installation

Cool Vent Cable

1. Slide the Cool Vent control lever to shut.

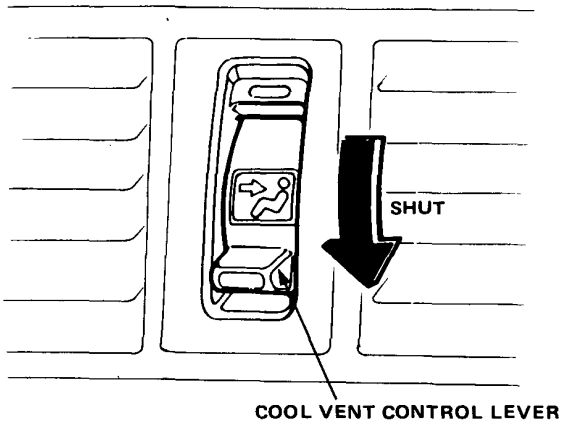

2. Close the Cool Vent door fully, then connect the end of the Cool Vent cable to the door arm, and snap the cable housing into the clamp.

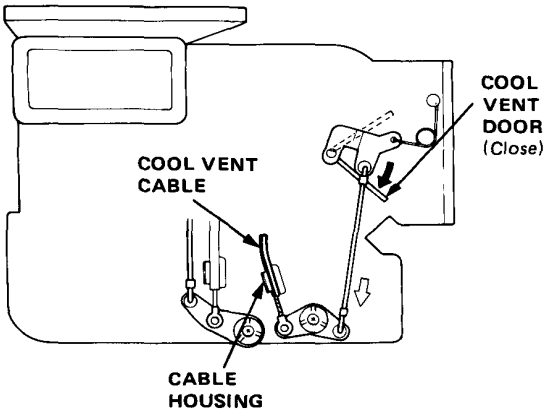

NOTE: After installation, check that the cable moves smoothly and the door fully opens and closes when operating the control lever.

Heat Control Cable

1. Turn the temperature control dial to max HOT.

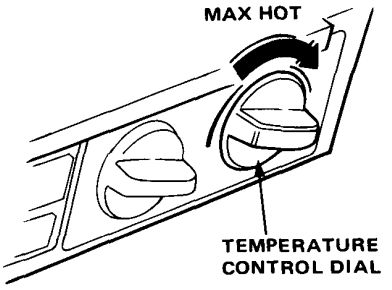

2. Open the air mix door, then connect the end of heat control cable to the arm, and snap the cable housing into the clamp.

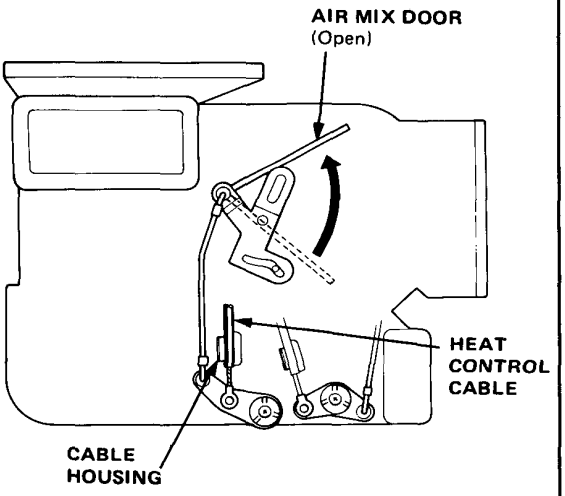

NOTE: After installation, check that the cable moves smoothly and the door fully opens and closes when operating the control dial.

Function Control Panel

Removal

1. Remove the screws, then remove the front console (See Section 14).
2. Remove the radio/cassette player.

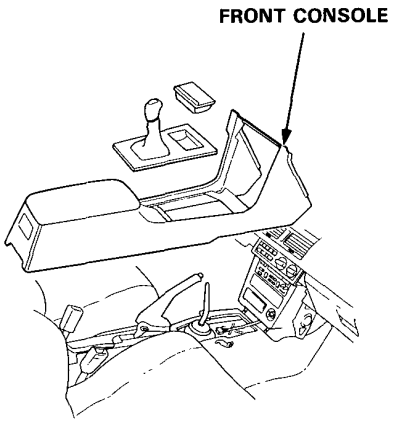

3. Remove the heat control cable from the heater. heater.

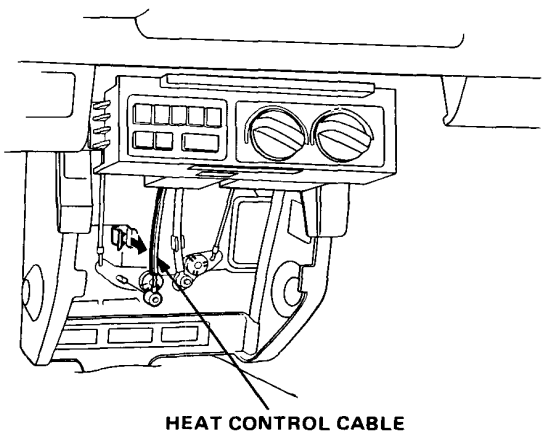

4. Remove the screws (4).
5. Disconnect the connector and remove the function control panel.

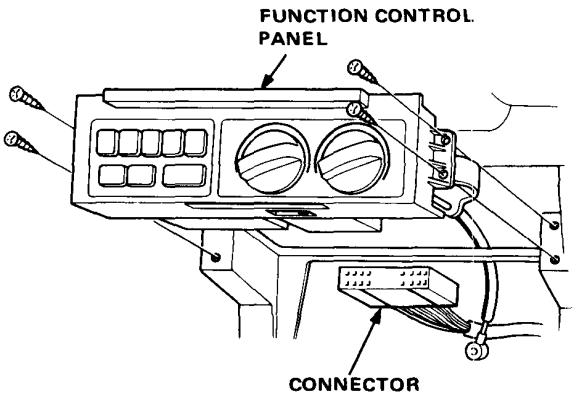

Install in the reverse order of removal and make sure the heat control cable is properly adjusted.

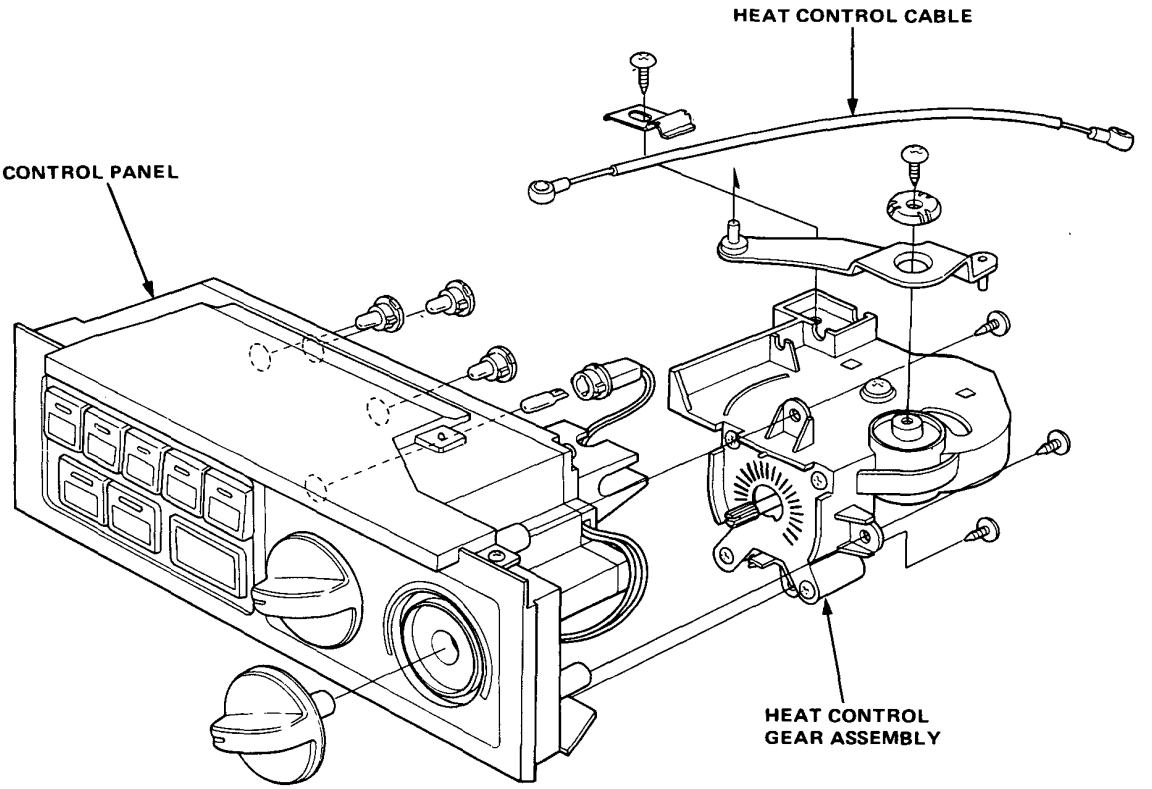
HEAT CONTROL CABLE
CONTROL PANEL
HEAT CONTROL
GEAR ASSEMBLY

Function Control Panel

Function Control Switch Test

1. Disconnect the 16P connector from the heater control.
2. Check for continuity between the terminals according to the table.

Position \ Terminal	7	1	13	14	15	16
					○	○
				○		○
			○			○
		○				○
	○					○

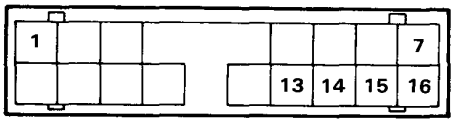

Recirculation Control Switch Test

1. Disconnect the 16P connector from the heater control.
2. Check for continuity between the terminals according to the table.

Position \ Terminal	12	11	3
	○		○
		○	○

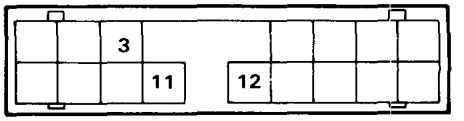

Function Control Motor

1. Connect the battery positive terminal to the 5 terminal of the function control motor and negative to the 1 terminal.

2. Using a jamper wire short the 2 terminal to the 3, 4, 6, 7 and 8 terminals to follow the order.

   - The motor should run each time the short circuit is made.

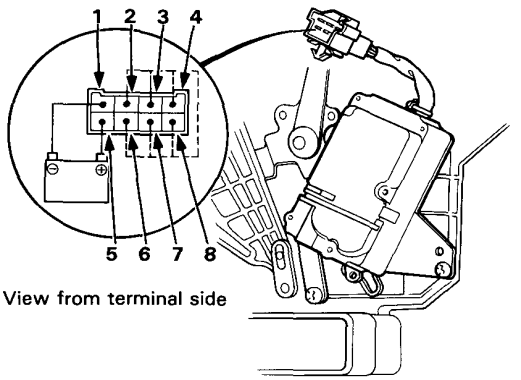

Recirculation Control Motor

1. Connect the battery positive to the 3 terminal of the recirculation control motor connector and negative to 1 terminal.

2. Using a jumper wire connect the 1 terminal and 2 or 4 terminal.

   - On the recirculation door REC position, the motor should turn with the 1 terminal connected to 2 terminal.

   - On the door FRESH position, the motor should turn with the 1 terminal connected to 4 terminal.

4. The motor automatically stops after half turn with the jumper wire connected.

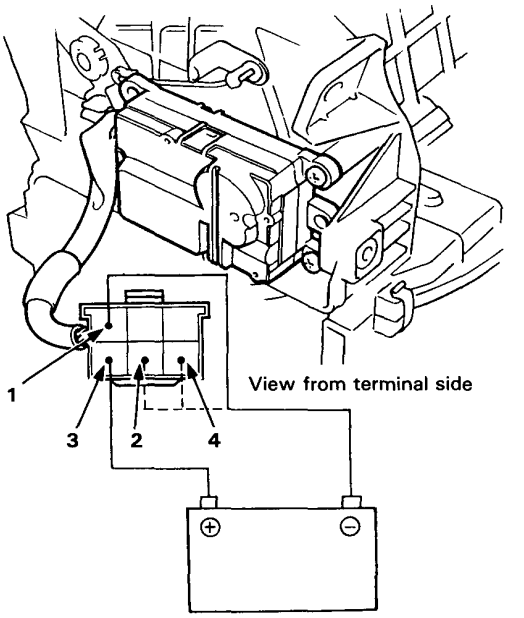

Power Transistor

NOTE: The power transistor cannot be tested with ordinary circuit testers. If the blower motor does not operate and you feel that the problem may be the power transistor, test as described below.

1. Check the blower motor and its wire harness.
   - If they are not OK, repair or replace as necessary, then retest.
   - If they are OK, go to step 2.
2. Disconnect the wire harness from the power transistor. Pull out the LT GRN/BLK lead from the connector and connect a 1.2—3.4 watt bulb as shown. Then, reconnect the wire harness to the transistor.
3. Turn the ignition on.
   - If the blower motor now operates, the controller is faulty. Replace it and retest.
   - If the blower motor still does not operate, the power transistor is faulty. Replace it and retest.

CAUTION:
- **To avoid a loose or disconnected terminal, be careful not to damage the locking tab when disconnecting and connecting the terminal.**
- **Insulate the LT GRN/BLK lead terminal from the body until the testing is completed.**

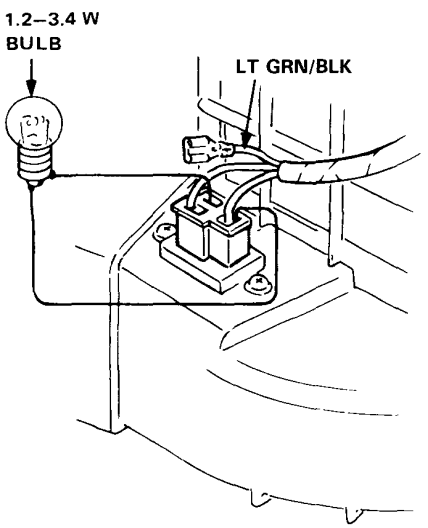

Relay

BLOWER RELAY and BLOWER HI RELAY

1. Check for continuity between terminals 3 and 4 . There should be no continuity.
2. Connect a 12V battery across terminals 1 and 2 . There should be continuity between terminals 3 and 4 .

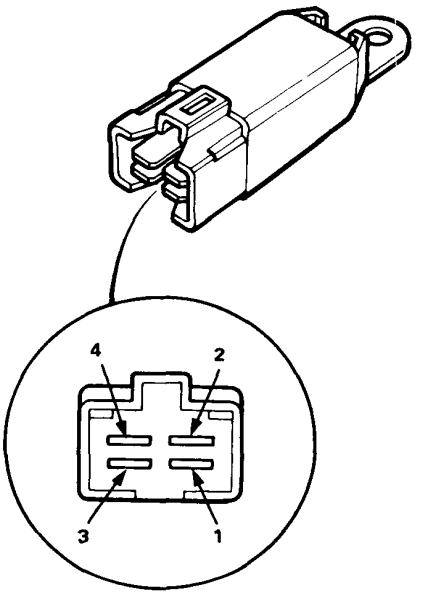

Circuit Diagram

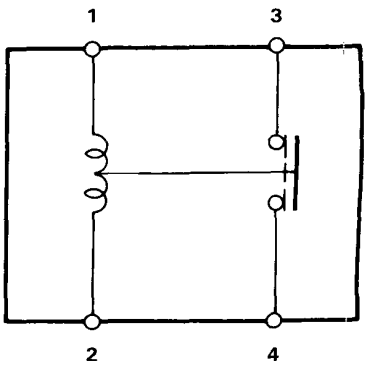

Vacuum Control Valve

Check that the vacuum hoses are properly routed and the heat control cable is adjusted, then test as follows.

1. Start the engine and let it idle.

2. Disconnect the vacuum hose from the heater valve control diaphragm and connect a vacuum gauge to the hose.

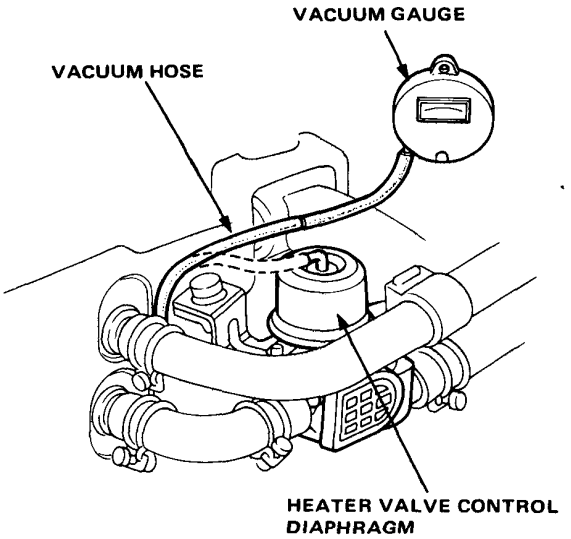

3. Turn the air temperature dial right and left and check for vacuum. There should be vacuum with the temperature lever in max cool, and there should be no vacuum with the lever turned to hot.

   - If there is no vacuum with the temperature lever in max cool, inspect the vacuum hose for pinching, disconnection, bending, or breakage. Replace the control valve and re-test.

   - There still is vacuum with the temperature lever turned to hot, replace the control valve and re-test.

Heater Valve Control Diaphragm

1. Disconnect the vacuum hose from the heater valve control diaphragm and connect a vacuum pump to the diaphragm.

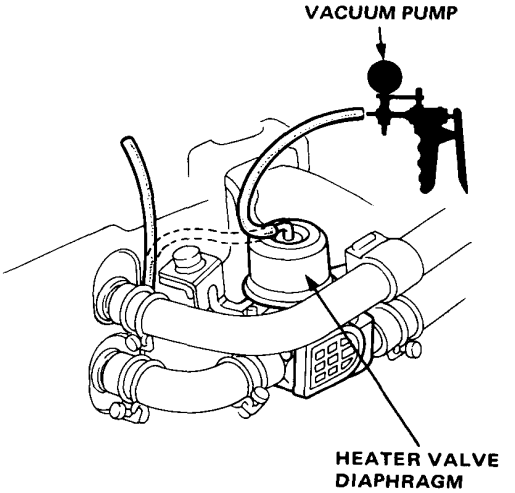

2. Apply vacuum and make sure that the diaphragm rod moves smoothly and vacuum remains steady.

   - If the rod does not move smoothly or vacuum does not remain steady, replace the diaphragm.

Automatic Climate Control

Illustrated Index

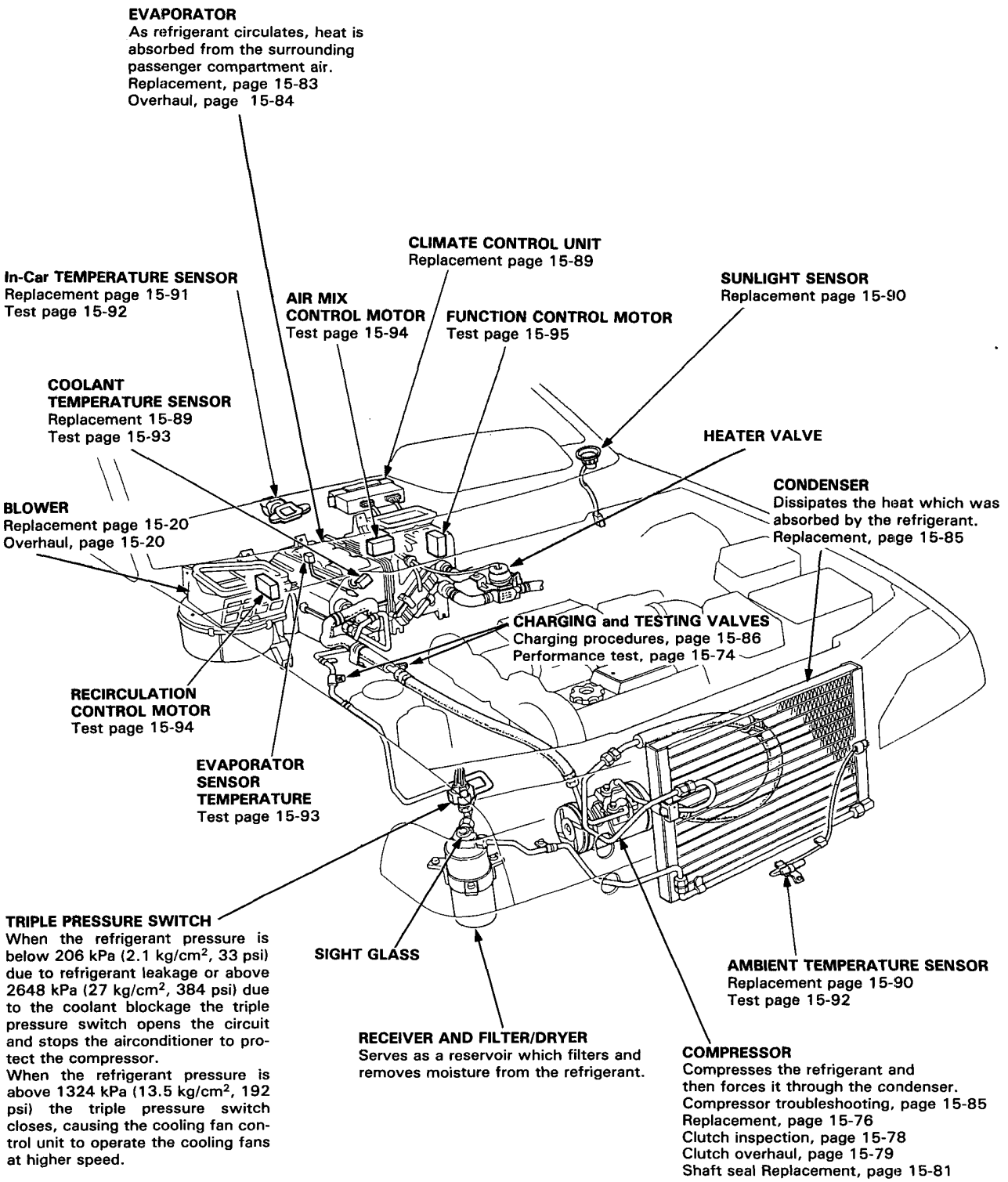

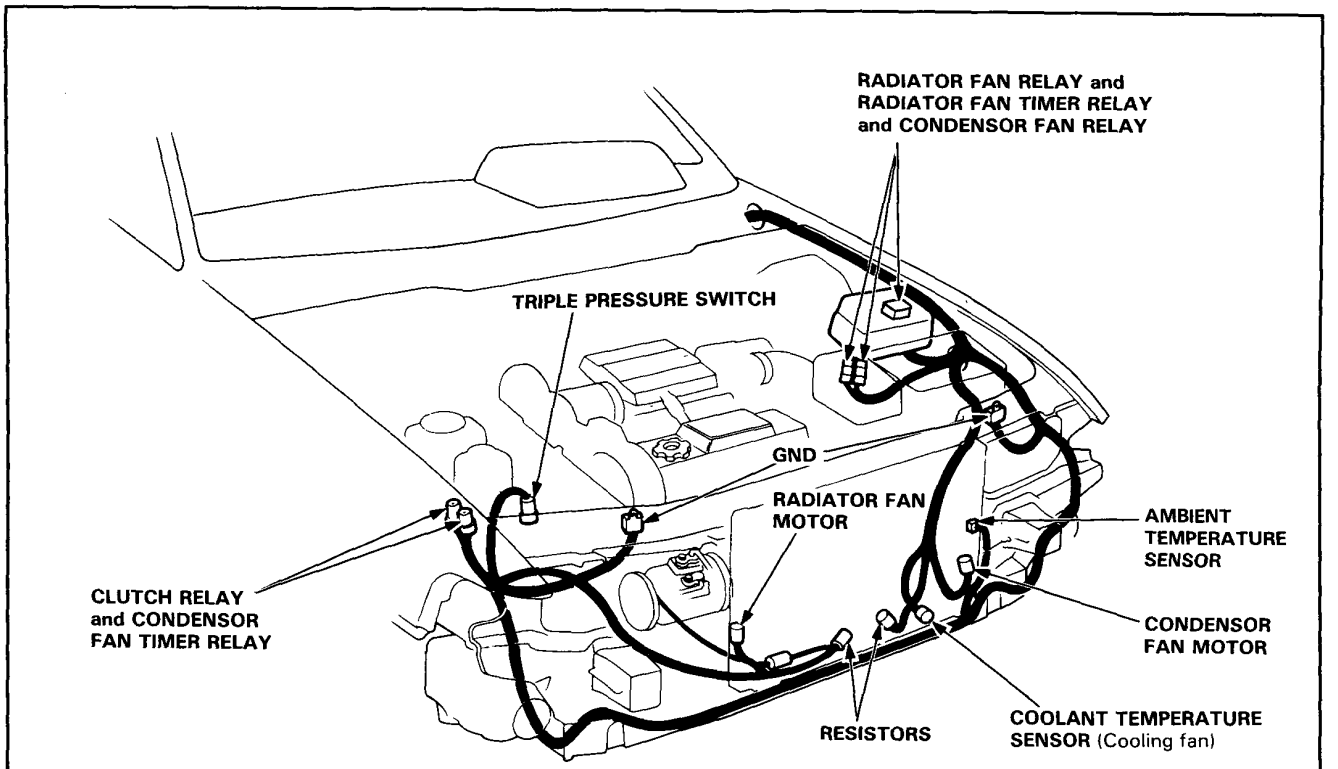

NOTE: LH Drive shown, RH Drive is similar.

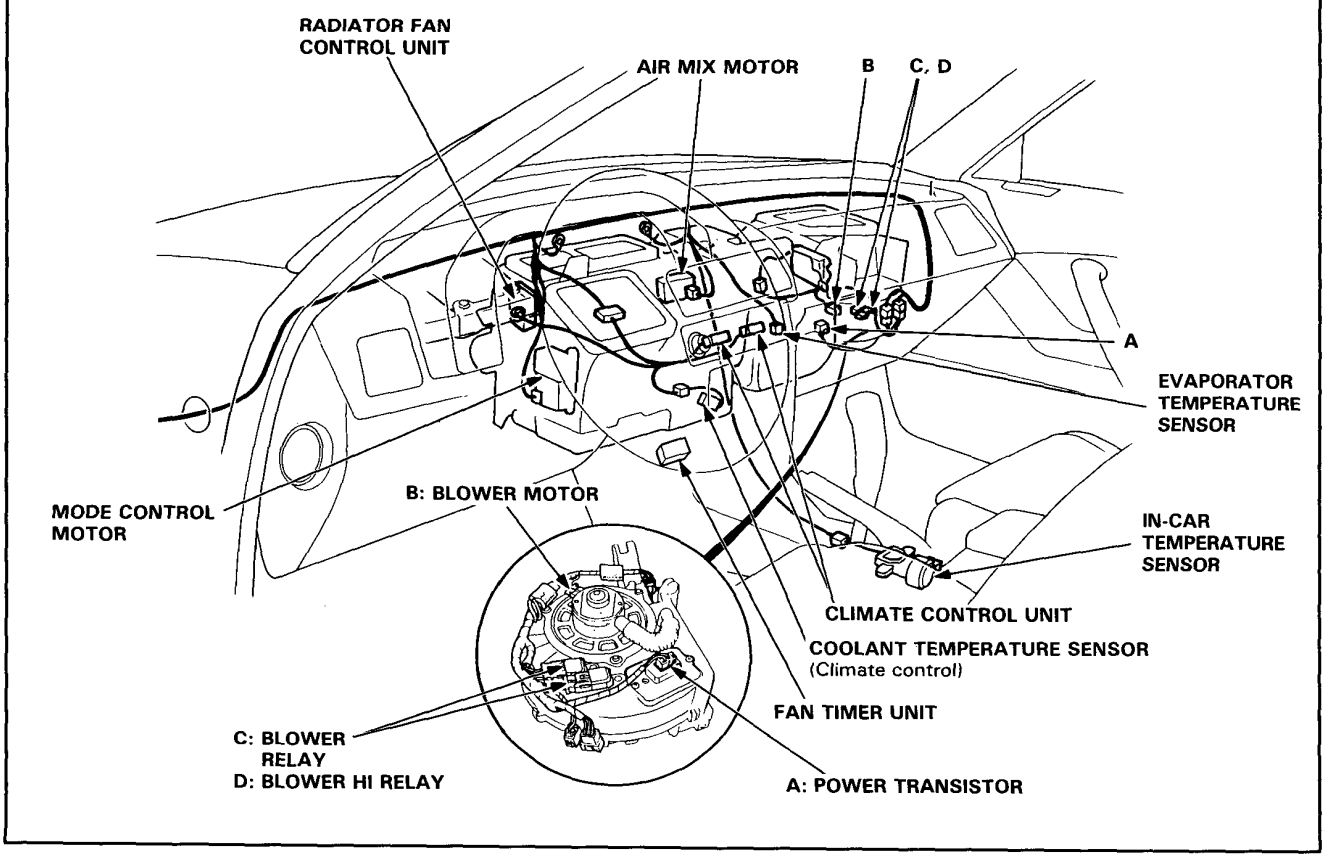

Circuit Diagram

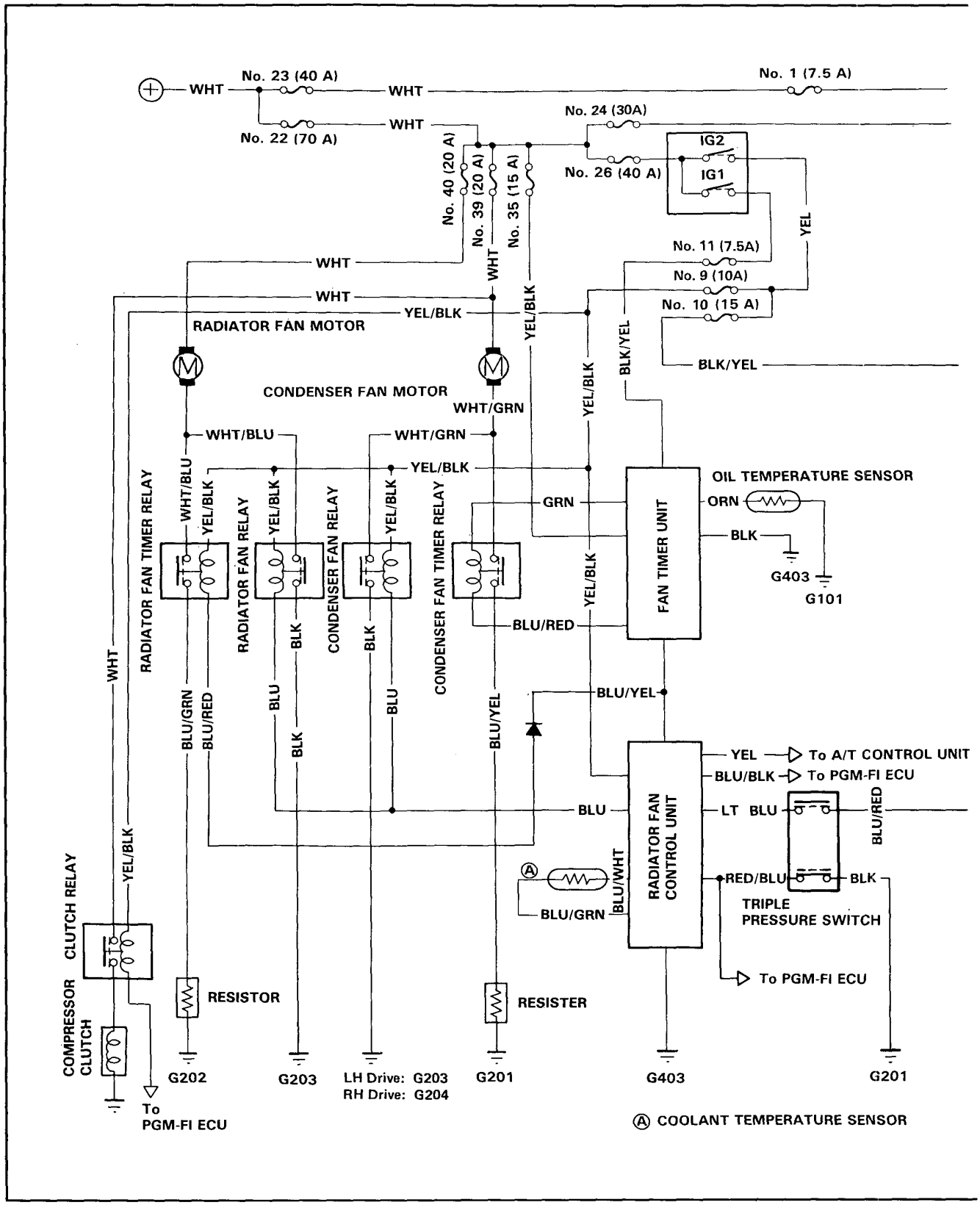

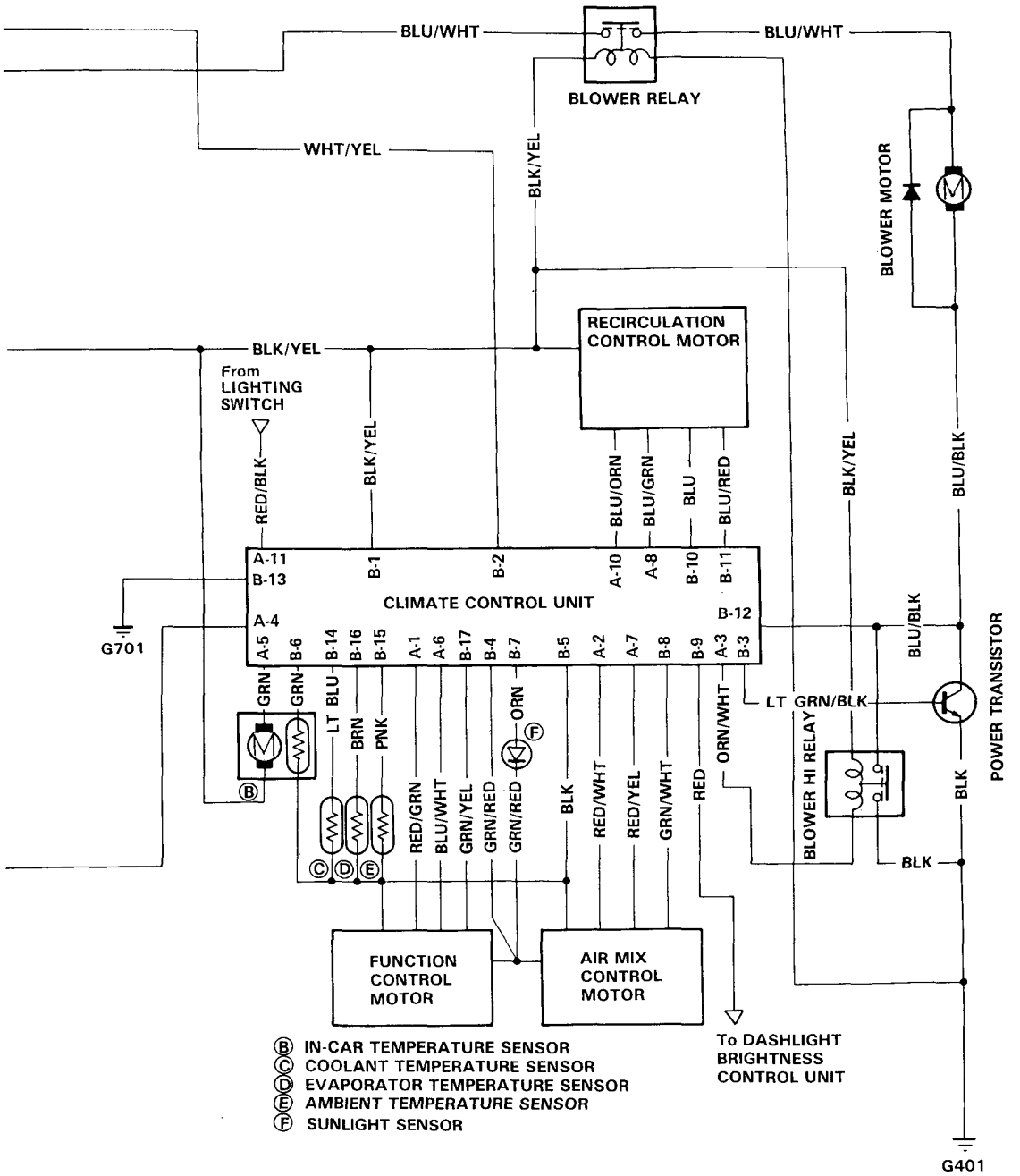

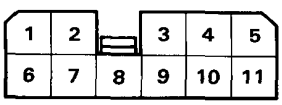

A CONNECTOR

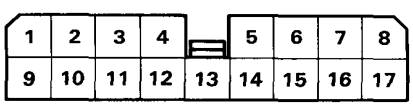

B CONNECTOR

Vie from wire side

Troubleshooting

Symptom Chart

If a problem is suspected, turn the ignition switch OFF for at least one minute. Then turn the ignition switch ON and push both the AUTO and OFF buttons on the control panel at the same time. Any problems in circuits A—G will be indicated by the respective LED coming on.
The climate control unit does not memorize the Self-diagnosis indicator lights. If the ignition switch is turned OFF for approximately one minutes or more, the indicator light memory will be lost.

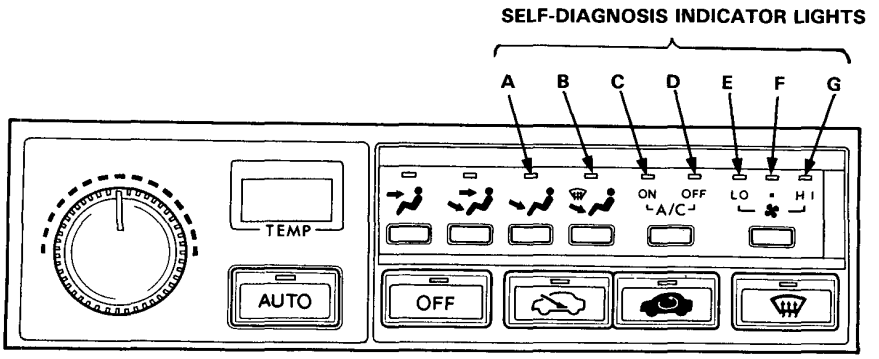

Control Panel

INDICATOR	PROBLEM COMPONENTS	SEE PAGE
A	Evaporator temperature sensor	15-37
B	Coolant temperature sensor	15-39
C	Air mix control motor	15-41
D	Function control motor	15-43
E	Sunlight sensor	15-45
F	In-car temperature sensor	15-47
G	Ambient temperature sensor	15-49

If the indicator light does not light, follow the table of symptom below.

SYMPTOM	SEE PAGE
Blower motor and A/C clutch do not operate. (All climate control system does not operate.)	15-51
A/C clutch operates but blower does not run.	15-57
Blower motor running speed does not change.	15-62
Recirculation motor does not run.	15-64
Blower motor run but A/C clutch does not operate.	15-54
Blower motor run but A/C clutch and cooling fans do not operate.	15-52
Cooling fans do not operate.	15-66
Condenser fan does not operate.	15-67

NOTE: Use the digital circuit tester (07411—0020000) to perform the troubleshooting.

Flow Chart —— Evaporator Temperature Sensor

Self-diagnosis indicator light A comes on: Indicates a problem in the Evaporator Sensor circuit.

NOTE: Use the digital circuit tester (07411—0020000) to check.

Problem in the evaporator temperature sensor circuit.

Disconnect the 2-P connector from the evaporator temperature sensor.

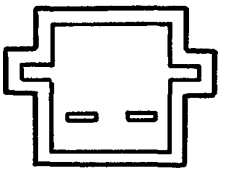

Measure resistance between the 2 terminals on the evaporator temperature sensor.

Is there 1-3 kΩ?

NO → **Replace evaporator temperature sensor.**

YES

Turn the ignition switch ON.

Measure voltage between BRN (+) terminal and body ground.

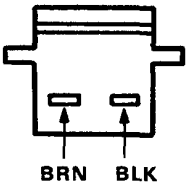

View from wire side.

Is there approx. 5V?

NO → (To page 15-38)

YES

Measure voltage between BRN (+) terminal and BLK (–) terminal.

Is there approx. 5V?

NO → **Repair open in BLK wire between control unit and evaporator temperature sensor.**

YES

Substitute a known-good control unit and recheck. If symptom/indication goes away, replace the original control unit.

(cont'd)

Flow Chart —— Evaporator Temperature Sensor (cont'd)

(From page 15-37)

Turn the ignition switch OFF.

Remove the climate control unit (page 15-85).

Turn the ignition switch ON.

Measure voltage between B-16 (+) terminal and B-5 (−) terminal

Is there approx. 5V?

YES → **Repair open in BRN wire between control unit (B-16) and evaporator temperature sensor.**

NO

Disconnect B connector from the control unit.

Measure resistance between B-16 terminal and body ground.

Is there less than 100 Ω?

YES → **Repair short in BRN wire between control unit (B-16) and evaporator temperature sensor.**

NO

Substitute a know-good control unit and recheck. If symptom/indication goes away, replace the original control unit.

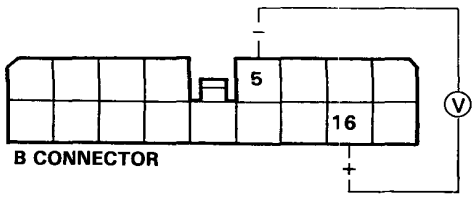

View from wire side.

Flow Chart —— Coolant Temperature Sensor

Self-diagnosis indicator light B comes on: Indicates a problem in the Coolant Temperature Sensor circuit.

NOTE: Use the digital circuit tester (07411—0020000) to check.

Problem in the coolant temperature sensor circuit.

Disconnect the 2P connector from the coolant temperature sensor.

Measure voltage between LT BLU (+) terminal and body ground. Turn the ignition switch ON.

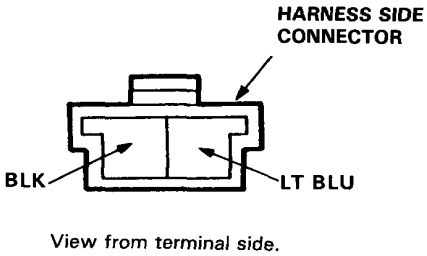

View from terminal side.

Is there approx. 5V?

NO → (To page 15-40)

YES

Measure voltage between LT BLU (+) terminal and BLK (–) terminal.

Is there approx. 5V?

NO → **Repair open in BLK (B-5) wire between control unit and coolant temperature sensor.**

YES

Reconnect the 2P connector to the coolant temperature sensor and disconnect the B connector from the climate control unit.

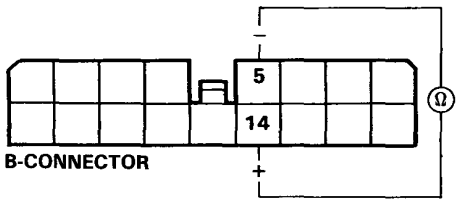

View from wire side

Measure resistance between B-14 (+) terminal and B-5 (–) terminal.

Is there 2-5 Ω?

NO → **Replace coolant temperature sensor.**

YES

Substitute a known-good control unit and recheck. If symptom/indication goes away, replace the original control unit.

(cont'd)

Flow Chart — Coolant Temperature Sensor (cont'd)

(From page 15-39)

Turn the ignition switch OFF.

Remove the climate control unit. (page 15-85).

Turn the ignition switch ON.

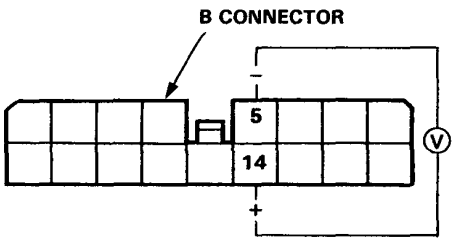

View from wire side.

Measure voltage between B-14 (+) terminal and B-5 (−) terminal.

Is there approx. 5V?

YES → **Repair open in LT BLU (B-14) wire between control unit and coolant temperature sensor.**

NO

Disconnect the B connector from the control unit.

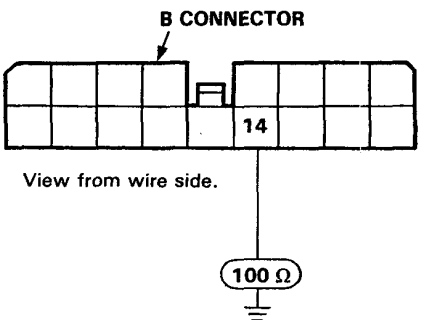

View from wire side.

Measure resistance between B-14 (+) terminal and body ground.

Is there less than 100 Ω?

YES → **Repair short in LT BLU (B-14) wire between control unit and coolant temperature sensor.**

NO

Substitute a known-good control unit and recheck. If symptom/indication goes away, replace the original control unit.

Flow Chart — Air Mix Control Motor

Self-diagnosis indicator light C comes on: Indicates a problem in the Air Mix Control Motor circuit.

NOTE: Use the digital circuit tester (07411—0020000) to check.

Problem in the air mix control motor circuit.

Turn the ignition switch OFF.

Make sure all wires in the air mix control motor connector are securely attached. Make sure the linkage is free of obstructions.

Remove the climate control unit (page 15-85), and disconnect the A and B connectors. Disconnect the connector from the function control motor.

On the 20 kΩ scale, measure the resistance between the B-4 terminal and B-5 terminal.

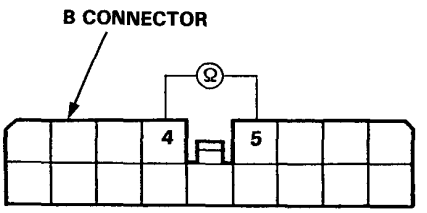

View from wire side.

Is there approx. 6.3 kΩ?

NO → Remove air mix control motor and test separately (page 15-90).

Does motor test OK?

NO → **Replace the air mix control motor.**

YES → **Repair harness between control unit and air mix control motor.**

YES →

Check the air mix control motor operation by briefly connecting battery (12V) positive to the A-7 terminal and negative to the A-2 terminal.
Reverse the wires to be sure the motor will run in both directions.

CAUTION: Disconnect the battery as soon as the motor has stopped. *Failure to do so will damage the motor.*

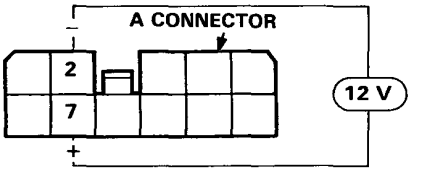

View from wire side.

Does the motor run smoothly in both directions?

NO → (To page 15-42)

YES → (To page 15-42)

(cont'd)

Flow Chart — Air Mix Control Motor (cont'd)

(From page 15-41)

Measure resistance between B-4 terminal and B-8 terminal.

Is there approx. 1.4 kΩ at the HOT position and approx. 5.3 kΩ at the COLD position of the motor?

NO → Remove air mix control motor and test separately (page 15-94).

Does motor test OK?

NO → **Replace air mix control motor.**

YES → **Repair harness between control unit and air mix control motor.**

YES → **Substitute a known-good control unit and recheck. If symptom/indication goes away, replace the original control unit.**

(From page 15-41)

Remove air mix control motor and test separately (page 15-94).

Does the motor test OK?

NO → **Replace air mix control motor.**

YES → **Repair harness between control unit and air mix control motor.**

B CONNECTOR

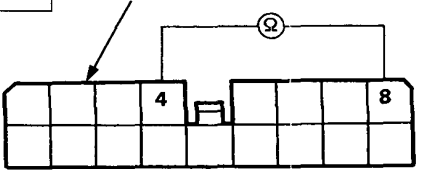

View from wire side.

Flow Chart — Function Control Motor

Self-diagnosis indicator light D comes on: Indicates a problem in the Function Control Motor Circuit.

NOTE: Use the digital circuit tester (07411—0020000) to check.

Problem in the function control motor circuit.

Turn the ignition switch ON.

Make sure all wires in the function control motor connector are securely attached. Make sure the linkage is free of obstructions.

Remove the climate control unit (page 15-85), and disconnect the A and B connectors. Disconnect the connector from the air mix control motor.

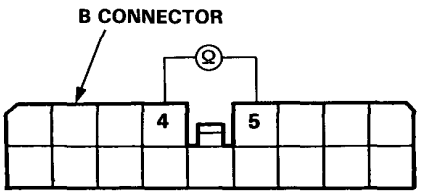

View from wire side.

On the 20 kΩ scale, measure the resistance between the B-5 terminal and B-4 terminal.

Is there approx. 4 kΩ?

NO → Remove function control motor and test separately (page 15-90)

Does motor test OK?

NO → **Replace function control motor.**

YES → **Repair harness between control unit and function control motor.**

YES

Check the function control motor operation by briefly connecting battery (12V) positive to the A-6 terminal and negative to the A-1 terminal.
Reverse the wires to be sure the motor will run in both direction.

CAUTION: Disconnect the battery as soon as the motor has stopped Failure to do so will damage the motor.

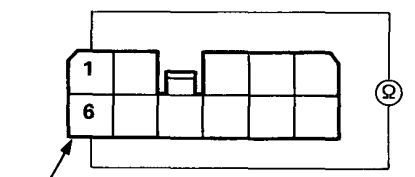

View from wire side.

Does the motor run smoothly in both direction?

NO → (To page 15-44)

YES → (To page 15-44)

(cont'd)

Flow Chart — Function Control Motor (cont'd)

(From page 15-43)

Measure resistance between B-4 terminal and B-17 terminal.

Is there approx. 1.2 kΩ at the VENT position and approx. 4.0 kΩ at the DEF position of the motor.

NO → Remove function control motor and test separately (page 15-94)

YES

Substitute a known-good control unit and recheck. If symptom/indication goes away, replace the original control unit.

(From page 15-43)

Remove function control motor and test separately (page 15-94).

Does the motor test OK?

NO → **Replace function control motor.**

YES

Repair harness between control unit and function control motor.

B CONNECTOR

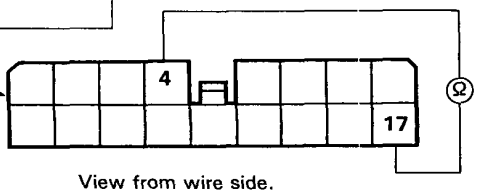

View from wire side.

Does motor test OK?

NO → **Replace function control motor.**

YES

Repair harness between control unit and function control motor.

Flow Chart —— Sunlight Sensor

Self-diagnosis indicator light E comes on: Indicates a problem in the Sunlight Sensor circuit.

NOTE: Use the digital circuit tester (07411—0020000) to check

Problem in the sunlight sensor circuit.

Disconnect the 2P connector from the sunlight sensor.

Measure resistance between the 2 terminals on the sunlight sensor.

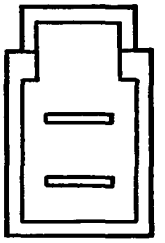

Is there 3-6 kΩ?

NO → **Replace sunlight sensor.**

YES

Turn the ignition switch ON.

Measure voltage between GRN/RED (+) terminal and body ground.

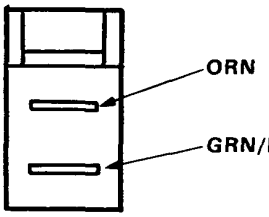

View from wire side.

Is there approx. 5V?

NO → (To page 15-46)

YES

Measure voltage between GRN/RED (+) terminal and ORN (–) terminal.

Is there approx. 5V?

NO → **Repair open in ORN (–) wire between control unit and sunlight sensor.**

YES

Substitute a known-good control unit and recheck. If symptom/indication goes away, replace the original control unit.

(cont'd)

Flow Chart — Sunlight Sensor (cont'd)

(From page 15-45)

Turn the ignition switch OFF.

Remove the climate control unit (page 15-89)

Turn the ignition switch ON.

Measure voltage between B-4 (+) terminal and B-7 (−) terminal.

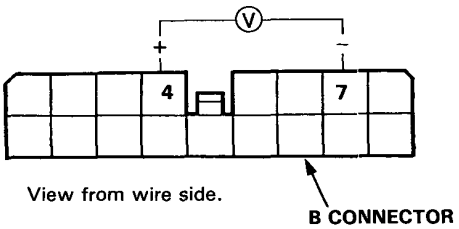

Is there approx. 5V?

YES → **Repair open in GRN/RED (B-4) wire between control unit and sunlight sensor.**

NO

Disconnect the B connector from the climate control unit.

Measure resistance between B-4 (+) terminal and body ground.

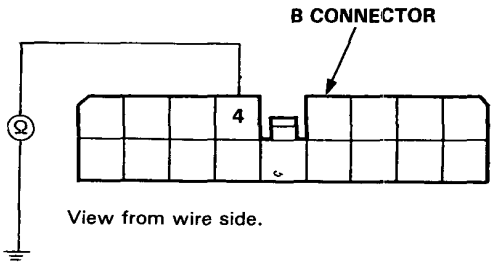

Is there less than 100 Ω?

NO → **Repair short in GRN/RED (B-4) wire between control unit and sunlight sensor.**

YES

Substitute a known-good control unit and recheck. If symptom/indication goes away, replace the original control unit.

Flow Chart —— In-car Temperature Sensor

Self-diagnosis indicator light F comes on: Indicates a problem in the In-car Temperature Sensor circuit.

NOTE: Use the digital circuit tester (07411—0020000) to check

Problem in the in-car temperature sensor circuit.

Disconnect the 2-P connector from the in-car temperature sensor.

Measure resistance between the 2 terminals on the in-car temperature sensor.

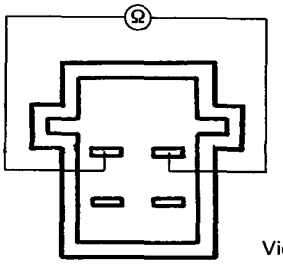

Is there 1-3 kΩ ?

NO → **Replace in-car temperature sensor.**

YES

Turn the ignition switch ON.

Measure voltage between GRN1 (+) terminal and body ground.

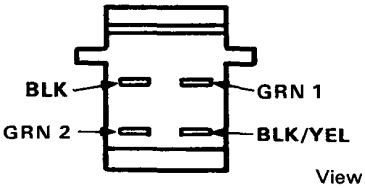

Is there approx. 5V?

NO → (To page 15-48)

YES

Measure voltage between GRN1 (+) terminal and BLK (–) terminal.

Is there approx. 5V?

NO → **Repair open in BLK wire between control unit and in-car temperature sensor.**

YES

Substitute a known-good control unit and recheck. If symptom/indication goes away, replace the original control unit.

(cont'd)

Flow Chart — In-car Temperature Sensor (cont'd)

(From page 15-47)

Turn the ignition switch OFF.

Remove the climate control unit (page 15-89).

Turn the ignition switch ON.

Measure voltage between B-6 (+) terminal and B-5 (−) terminal.

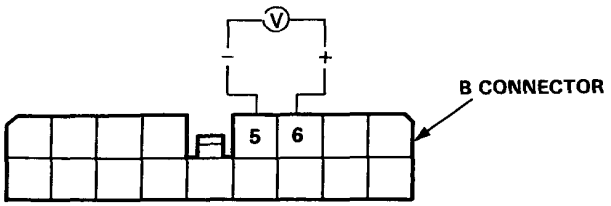

View from wire side.

Is there approx. 5V?

YES → **Repair open in GRN wire between control unit (B-6) and in-car temperature sensor.**

NO

Disconnect the B connector from the climate control unit.

Measure resistance between B-6 (+) terminal and body ground.

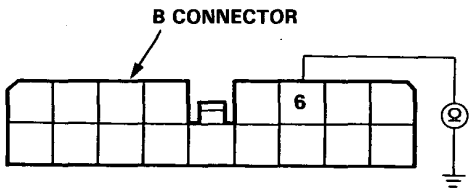

View from wire side.

Is there less than 100 Ω?

YES → **Repair short in GRN wire between control unit (B-6) and in-car temperature sensor.**

NO

Substitute a known-good control unit and recheck. If symptom/indication goes away, replace the original control unit.

Flow Chart —— Ambient Temperature Sensor

Self-diagnosis indicator light G comes on: Indicates a problem in the Ambient Temperature Sensor circuit.

NOTE: Use the digital circuit tester (07411—0020000) to check

Problem in the ambient temperature sensor circuit.

Turn the ignition switch OFF.

Remove front grille (See Section 14).

Disconnect the 2P connector from the ambient temperature sensor.

Measure resistance between the 2 terminals on the ambient temperature sensor.

Is there 1-3 kΩ?

NO → **Replace ambient temperature sensor.**

YES

Turn the ignition switch ON.

Measure voltage between PNK (+) terminal and body ground.

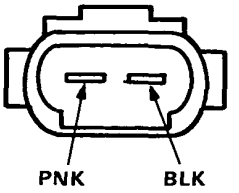

View from terminal side.

Is there approx. 5V?

NO → (To page 15-50)

YES

Measure voltage between PNK (+) terminal and BLK (–) terminal.

Is there approx. 5V?

NO → **Repair open in BLK wire between control unit and ambient temperature sensor.**

YES

Substitute a known-good control unit and recheck. If symptom/indication goes away, replace the original control unit.

(cont'd)

Flow Chart — Ambient Temperature Sensor (cont'd)

(From page 15-49)

Turn the ignition switch OFF.

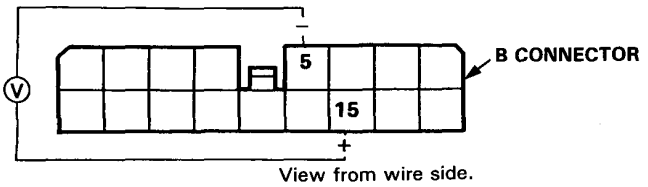

Remove the climate control unit (page 15-89).

Measure voltage between B-15 (+) terminal and B-5 (−) terminal.

Is there approx. 5V?

YES → **Repair open in PNK wire between control unit and ambient temperature sensor.**

NO

Disconnect the B connector from the climate control unit.

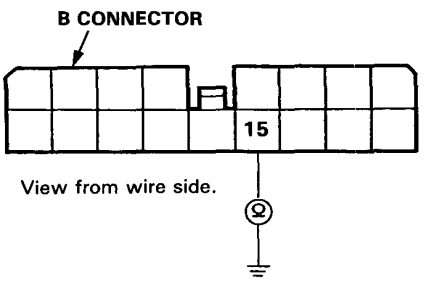

Measure resistance between B-15 (+) terminal and body ground.

Is there less than 100 Ω?

YES → **Repair short in PNK wire between control unit and ambient temperature sensor.**

NO

Substitute a known-good control unit and recheck. If symptom/indication goes away, replace the original control unit.

Flow Chart ——Climat Control System

NOTE: Use the digital circuit tester (07411—0020000)

No heater and A/C in either manual or AUTO modes.

Remove the climate control unit (page 15-89).

Turn the ignition switch ON.

Measure voltage between B-2 (+) terminal and B-13 (−) terminal.

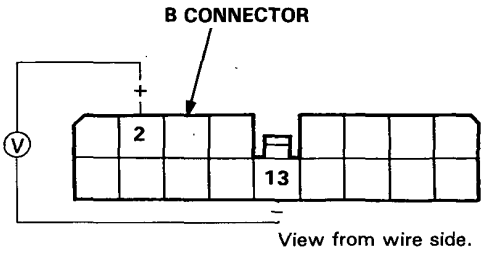

Is there battery voltage?

NO → **Repair open in WHT/YEL (B-2) wire between control unit and No.1 fuse.**

YES

Measure voltage between B-1 (+) terminal and B-13 (−) terminal.

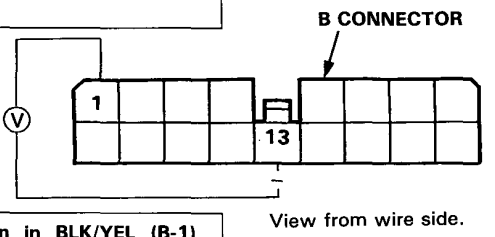

Is there battery voltage?

NO → **Repair open in BLK/YEL (B-1) wire between control unit and No.10 fuse, or between No.10 fuse and ignition switch.**

YES

Substitute a known-good control unit and recheck.

Flow Chart —— A/C System

NOTE: Use the digital circuit tester (07411—0020000) to check

A/C system does not run.

Check the No.26 (40A), No.35 (15A), No.39 (20A), No.40 (20A) fuses in engine compartment and the No.11 (7.5A), No.9 (10A) fuses in the under dash fuse box.

Are the fuses OK?

NO → **Replace the fuse(s) and retest.**

YES

Turn the ignition switch OFF.

Disconnect the 4P connector from triple pressure switch.

Turn the ignition switch ON.

Connect a jumper wire between LT BLU terminal and body ground.

Does the A/C system run?

NO → At the Radiator fan control unit using a jumper lead, connect the LT BLU wire to body ground.

Does the A/C system come on?

NO → **See radiator fan control input test (page 15-66).**

YES → **Repair open in LT BLU wire between the triple pressure switch and radiator fan control.**

YES

A/C switch and fan switch ON.

Connect a jumper wire between LT BLU terminal and BLU/RED terminal.

Does the A/C system run?

YES → Turn the ignition switch OFF.

Inspect the triple pressure switch condition and A/C pressure.

Is connector OK?

NO → **Repair connector and retest.**

YES → **Replace the triple pressure switch and retest.**

NO

Turn the ignition switch OFF.

Reconnect the 4P connector to the triple pressure switch.

(To page 15-53)

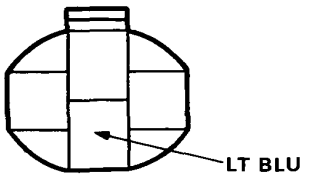

View from wire side.

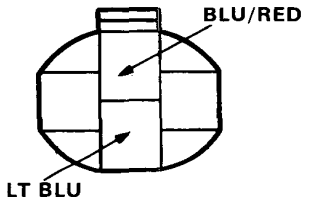

View from wire side.

(From page 15-52)

Remove the climate control unit (page 15-89).

Turn the ignition switch ON.

Connect a jumper wire between BLU/RED (B-4) terminal and body ground.

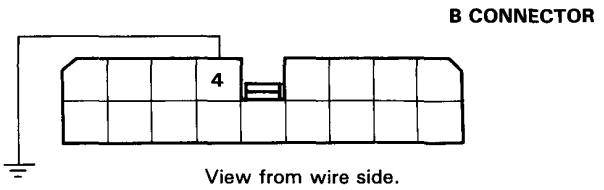

Does the A/C system run?

NO → **Repair open in BLU/RED wire between pressure switch and control unit.**

YES

Turn the ignition switch OFF.

Check for continuity between BLK (B-13) terminal and body ground.

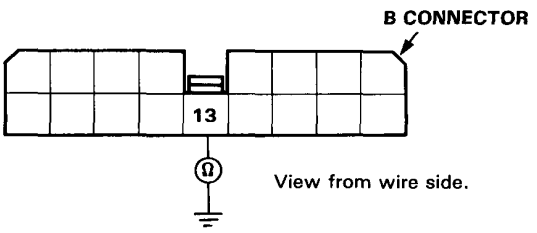

Is there continuity?

NO → **Repair open in BLK wire between control unit and body ground or poor ground (G701).**

YES

Inspect the control unit A and B connectors condition.

Are the connectors OK?

NO → **Repair the connectors and retest.**

YES

Substitute a known-good control unit and retest.

Flow Chart —— Compressor Clutch

First, switch relays between the clutch and condenser fan timer to see if the relay is faulty.

NOTE: Use the digital circuit tester (07411—0020000) to check.

Compressor clutch does not come on. (But fans do)

Check the No.26 (40A), No.9 (10A), No.39 (20A) fuses.

Are the fuses OK?

NO → **Replace the fuse(s) and retest.**

YES

Turn the ignition switch OFF.

Disconnect the 4P connector from the compressor clutch relay.

Turn the ignition switch ON.

Measure voltage between WHT terminal and body ground.

Is there battery voltage?

NO → **Repair open in WHT wire between compressor clutch relay and No. 39 fuse.**

YES

Measure voltage between YEL/BLK terminal and body ground.

(To page 15-55)

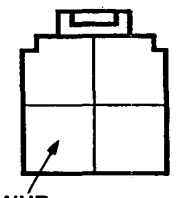

View from wire side.

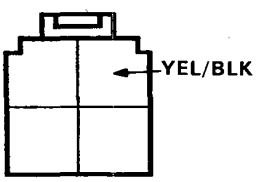

View from wire side.

(From page 15-54)

Is there battery voltage

NO → **Repair open in YEL/BLK wire between compressor magnet clutch and No.9 fuse.**

YES

Inspect the compressor clutch relay (page 15-78).

Is the relay OK?

NO → **Replace the compressor clutch relay and retest.**

YES

Check for continuity from RED terminal and body ground.

Is there continuity?

YES → Turn the ignition switch OFF.

Reconnect the 4P connector to the compressor clutch relay.

Connect a PGM-F1 test harness (07999-PD6000A) between the ECU and connector.

Turn the ignition switch ON.

Connect a jumper wire between B8 terminal and body ground.

Does the compressor clutch click one time?

NO → **Repair open in RED/BLU wire between compressor clutch relay and PGM-FI ECU.**

YES

(To page 15-56)

NO

Turn the ignition switch OFF

Disconnect the compressor clutch connector.

Check for continuity from RED terminal between 4P connector (compressor clutch relay) and compressor clutch connector (wire side).

Is there continuity?

NO → **Repair open in RED wire between compressor clutch relay and compressor clutch connector.**

YES

Replace the compressor clutch and retest.

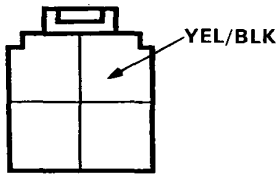

View from wire side.

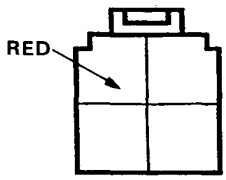

View from wire side.

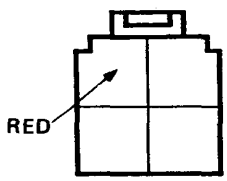

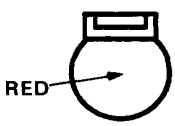

View from wire side.

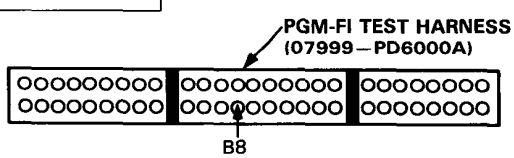

Flow Chart — Compressor Clutch (cont'd)

(From page 15-55)

Using a jumper lead connect B10 terminal to body ground

Does A/C clutch click on one time?

NO → **Subsitute known good ECU and retest.**

YES

Using a jumper lead, connect the BLU/BLK terminal at the radiator fan control unit to body ground.

Does the A/C clutch click on one time?

YES → **See radiator fan control input test, (page 15-66)**

NO

Repair open in BLU/BLK wire between the PGM-FI ECU and radiator fan control unit.

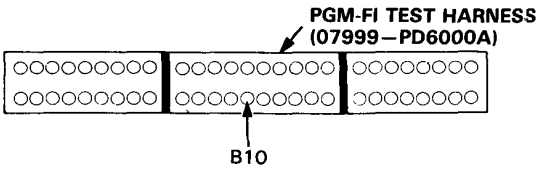

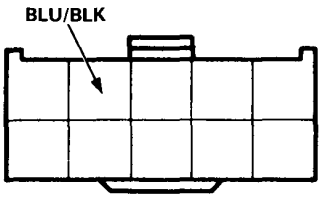

View from wire side

Flow Chart —— Blower

NOTE: Use the digital circuit tester (07411—0020000) to check

Blower motor does not run at all.

Inspect the No.22 (70A), No.24 (30A), No.26 (40A) and No.10 (15A) fuses.

Are the fuse OK?

NO → **Replace fuse(s).**

YES

Disconnect the blower relay 4P connector from the blower motor.

Turn the ignition switch ON.

Measure voltage between BLU/-WHT(1) terminal (+) and body ground (–).

Is there battery voltage?

NO → **Repair open in BLU/WHT(1) wire between blower relay and ignition switch.**

YES

Measure voltage between BLK/-YEL terminal (+) and body ground (–).

Is there battery voltage?

NO → **Repair open in BLK/YEL wire between blower relay and ignition switch.**

YES

(To page 15-58)

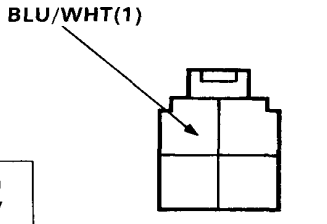

View from wire side.

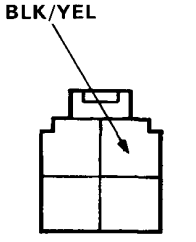

View from wire side.

(cont'd)

Flow Chart —— Blower (cont'd)

(From page 15-57)

Inspection the blower relay (page 15-28).

Is the blower relay OK?

NO → **Replace the blower relay and retest.**

YES

Reconnect the blower relay, then connect a jumper wire between the BLK terminal and body ground.

Does blower motor run?

YES → **Repair open in BLK wire between the blower relay and body ground or poor ground (G401).**

NO

Turn the ignition switch OFF.

Disconnect the 2P connector from the blower motor.

Turn the ignition switch ON.

Measure voltage between BLU/-WHT terminal (+) and body ground (–).

Is there battery voltage?

NO → **Repair open in BLU/WHT wire between blower motor and blower relay.**

YES

Turn the ignition switch OFF.

Reconnect the 2P connector to the blower motor.

(To page 15-59)

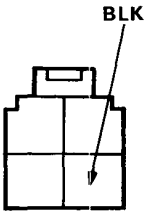

View from wire side.

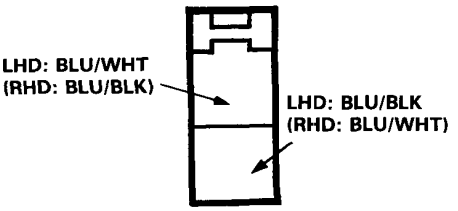

View from wire side.

(From page 15-58)

Connect a jumper wire between the BLU/BLK terminal and body ground. Turn the ignition switch ON.

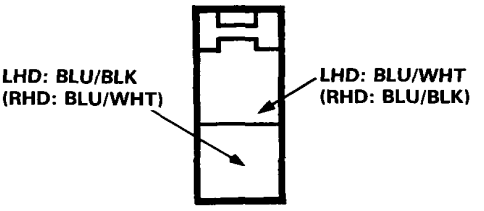

View from wire side.

Does blower motor run?

NO → **Replace the blower motor and retest.**

YES

Turn the ignition switch OFF.

Disconnect the blower hi relay 4P connector.

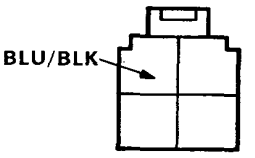

View from wire side.

Turn the ignition switch ON.

Connect a jumper wire between the BLU/BLK terminal (+) and body ground.

Does blower motor run?

NO → **Repair open in BLU/BLK wire between blower motor and blower hi-relay.**

YES

Connect a jumper wire between the BLU/BLK terminal and BLK terminal.

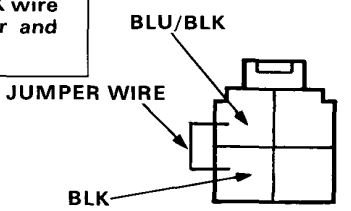

View from wire side.

Does blower motor run?

NO → **Repair open in BLK wire between blower hi-relay and body ground or poor ground (G401).**

YES

(To page 15-60)

(cont'd)

Flow Chart —— Blower (cont'd)

(From page 15-59)

Measure voltage between BLK/YEL (+) terminal and body ground.

Is the battery voltage?

NO → **Repair open in BLK/YEL wire between ignition switch and blower hi-relay.**

YES

Inspect blower hi-relay (page 15-28).

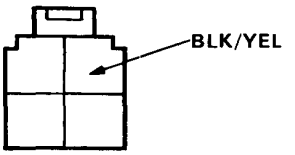

View from wire side.

Is the blower hi-relay OK?

NO → **Replace the blower hi-relay and retest.**

YES

Turn the ignition switch OFF.

Reconnect the 4P connector to the blower hi-relay.

Remove the climate control unit (page 15-89).
Disconnect the A and B connectors from the climal control unit.

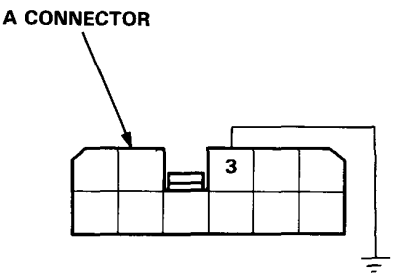

View from wire side

Connect a jumper wire between the ORN/WHT (A-3) terminal and body ground.

(To page 15-61)

(From page 15-60)

Turn the ignition switch ON.

Does the blower motor run?

NO → **Repair open in ORN/WHT wire between blower hirelay and climate control unit.**

YES

Check for continuity between BLK (B-13) terminal and body ground.

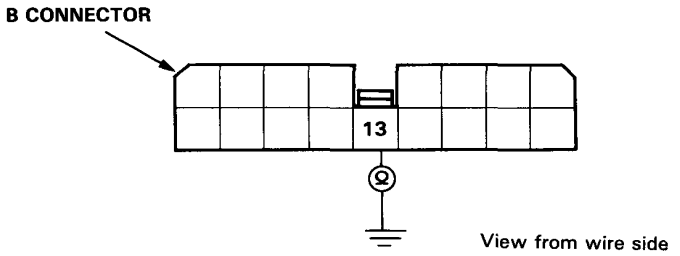

Is there continuity?

NO → **Repair open in BLK wire between climate control unit and body ground or poor ground (G701).**

YES

Substitute a known-good control unit and retest.

(cont'd)

Flow Chart —— Blower (cont'd)

NOTE: Use the digital circuit tester (07411—0020000) to check.

Blower motor running speed does not change.

Turn the ignition switch OFF.

Disconnect the 3P connector from the power transistor.

Measure voltage between LT GRN/BLK (+) terminal and body ground.

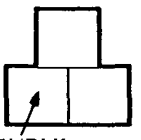

View from wire side.

Turn the ignition switch ON.

Set the temperature control knob in center position and climate control system ON.

Is there battery voltage?

NO → Turn the ignition switch OFF.

Remove the climate control unit (page 15-89).
Disconnect the B connector from the control unit.

YES

Inspect the power transistor (page 15-28).

Is the power transistor OK?

NO → **Replace the power transistor and retest.**

YES

Check for continuity from BLK terminal and body ground.

Is there continuity?

NO → **Repair open in BLK wire between power transistor and body ground or poor ground (G401).**

YES

Substitute a known-good control unit and retest.

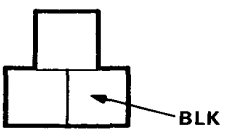

View from wire side.

(To page 15-63)

(From page 15-62)

Measure voltage between BLU/BLK (+) (B-12) terminal and body ground. Turn the ignition switch ON.

Is there battery voltage?

NO → **Repair open in BLU/BLK wire between control unit and blower motor.**

YES

Turn the ignition switch OFF.

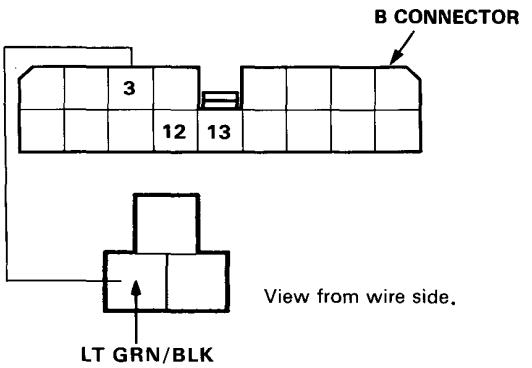

Check for continuity between LT GRN/BLK (B-3) terminal and power transistor LT GRN/BLK terminal.

Is there continuity?

NO → **Repair open in LT GRN/BLK wire between control unit and power transistor.**

YES

Check for continuity between BLK (B-13) terminal and body ground.

Is there continuity?

NO → **Repair open in BLK wire between control unit and body ground or poor ground (G701).**

YES

Substitute a known-good control unit and retest.

Flow Chart — Recirculation Control Motor

NOTE: Use the digital circuit tester (07411—0020000) to check.

Recirculation control motor does not run.

Check the No.10 (15A) fuse.

Is the No.10 fuse OK?
- NO → **Replace the No. 10 fuse.**
- YES ↓

Disconnect the 6P connector and turn the ignition switch ON.

Measure voltage between the BLK/YEL terminal (+) and body ground (–).

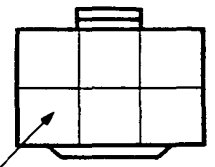

View from wire side.

Is there battery voltage?
- NO → **Repair open in BLK/YEL wire between the recirculation control motor and No.10 fuse.**
- YES ↓

Inspect the recirculation control motor (page 15-90).

Is the recirculation control motor OK?
- NO → **Replace the recirculation control motor and retest.**
- YES ↓

Turn the ignition switch OFF and reconnect the 6P connector.

Remove the climate control unit (page 15-85) and disconnect the B connector.

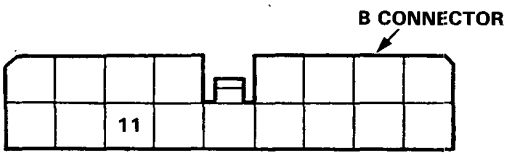

View from wire side.

Connect the BLU/RED (B-11) terminal to the body ground and turn the ignition switch ON.

Does the motor start runing?
- NO → **Repair open in BLU/RED wire between the climate control unit and recirculation control motor.**
- YES ↓

(page 15-65)

(From page 15-64)

Disconnect the 6P connector *from the recirculation control motor.*

Check for continuity between the climate control unit and recirculation control motor in BLU, BLU/GRN and BLU/ORN wires.

Is there continuity?

NO → **Repair open in BLU, BLU/GRN and/or BLU/ORN wires between the climate control unit and recirculation control motor.**

YES → **Replace the climate control unit.**

RECIRCULATION CONTROL MOTOR SIDE

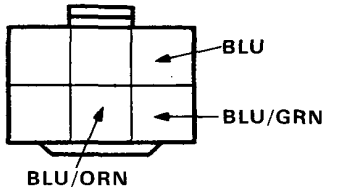

View from wire side.

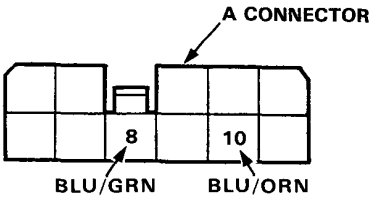

View from wire side.

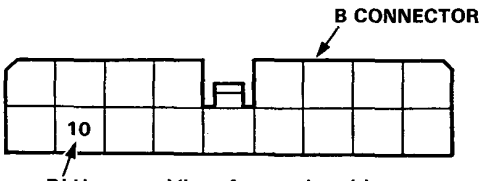

View from wire side.

Radiator Fan Control Unit Input Test

NOTE: Before performing input test, do the following:

1. Check fuse No. 24 (30A), 26 (40A), 35 (15A), 39 (20A) and No. 40 (20A) in the Under Hood Relay Box and fuse No. 11 (7.5A) and 9 (10A) in the Under Dash Fuse Box.

2. Disconnect 10P connector from Radiator Fan Control Unit and turn ignition switch ON.

NOTE:
- Any abnormality found during input test must be corrected before continuing.
- If all tests produce desired result substitute a known good radiator fan control unit.

Wire	Position	Test Condition	Desired Results	Corrective Action
BLK	9	Check for continuity to body ground	Should have continuity to body ground	Repair open in BLK wire between rad fan control *and* body ground
YEL/BLK	4	Check for battery voltage	Should have battery voltage	Check for open in YEL/BLK wire between rad fan control and No. 9 fuse.
BLU	8	Using a jumper lead connect to body ground	Both fans should run full speed	See flow chart "cooling fan A" on page 15-68.
BLU/BLK	2	Using a jumper lead connect to body ground	A/C compressor clutch should engage	See flow chart "compressor clutch" on page 15-54.
BLU/YEL	5	Using a jumper lead connect to body ground	Radiator fan should run at low speed	See flow chart "clooling fan B"on page 15-69.
		Using a jumper lead connect to YEL/BLK wire	Condensor fan should run at low speed	See flow chart "cooling fan C" on page 15-71.
LT BLU	7	Check for continuity to body ground	Should have continuity to body ground with A/C switch and fan switches ON	See flow chart "A/C system" on page 15-52.
RED/BLU	10	Check for continuity to body ground	Should have continuity to body ground	Test for open in RED/BLU wire between rad fan control and triple pressure switch abnormal A/C pressure or faulty triple pressure switch
BLU/WHT and BLU/GRN	1 6	Using an ohmmeter on the 20 k scale check for continuity between the BLU/WHT and BLU/GRN wires	Depending on coolant temperature it should be between 0.5 kΩ to 1.2 kΩ	See flow chart "cooling fan D" on page 15-72.

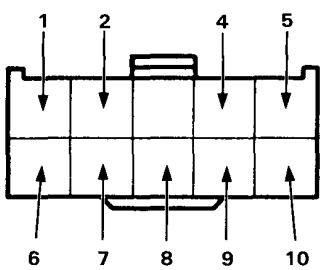

View from wire side

Fan Timer Input Test

Before performing the fan timer input test do the following:

1. Check fuse No. 26 (40A), 35 (15A), 39 (20A) and 40 (20A) in the under hood relay box and fuse No. 11 (7.5A) and 9 (10A) in the under dash fuse box.

2. Remove the 7P connector from the Fan timer unit and turn the ignition ON.

   NOTE:
   - Any abnormality found during input test must be conrrected before continuing.
   - If all tests produce desired result substitute a known good fan timer.

Wire	Position	Test Condition	Desired Results	Corrective action if Desired Results or not obtained
BLK	3	Test for continuity to body ground.	Should have continuity.	Repair open in BLK wire between fan timer unit and body ground.
BLK/YEL	6	Test for Battery Voltage with ignitor switch on.	Should have Battery Voltage	Repair open in BLK/YEL between fan timer unit and fuse.
YEL/BLK	5	Test for Battery Voltage at all times (key on or off)	Should have Battery Voltage	Repair open in YEL/BLK wire between fan timer unit and fuse
BLU/YEL	2	Test for 12 volt	Should have 12 V.	Test for open in BLU/YEL wire between fan timer unit and rad fan control unit or faulty rad fan control unit see input test.
ORN	4	Using an ohmmeter on the 20 k scale test for continuity to body ground	There should be to 105°C (221°F)	Test for open, short to ground or faulty oil temp. sensor.
BLU/RED and GRN	1 7	Test for continuity between BLU/RED and GRN wires.	The should be 90 to 120 Ω.	See flow chart "cooling fan C" on page 15-71.

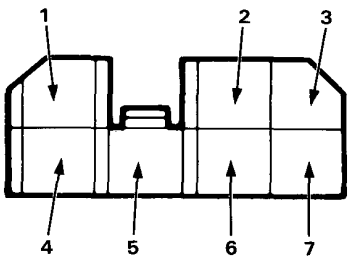

Flow Chart —— Cooling Fans "A"

If one fan runs and the other doesn't, switch the relays. If the problem changes with the relays, replace the defective one. If the problem remains unchanged, start the following test.

NOTE: Use the digital circuit tester (07411—0020000) to check.

Cooling fans do not run with BLU wire shorted to ground.

Turn the ignition switch OFF.

Disconnect the 4P connectors from the radiator fan relay and condenser fan relay.

Turn the ignition switch ON.

Measure voltage between YEL/BLK terminals and body ground.

Is there battery voltage?

- NO → **Repair open in YEL/BLK wire(s) between ignition switch and relay connector(s).**
- YES ↓

Inspect the radiator and condenser fan relays.

Are the relays OK?

- NO → **Replace the relay(s) and retest.**
- YES ↓

Measure voltage between WHT/BLU, WHT/GRN terminals and body ground.

(To page 15-69)

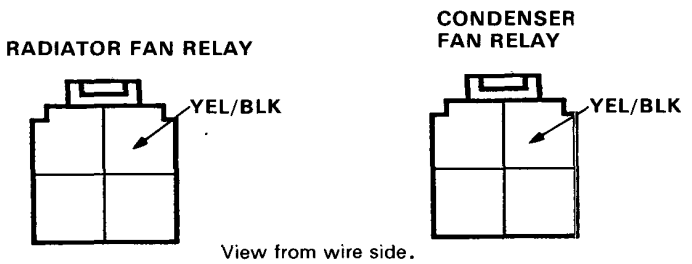

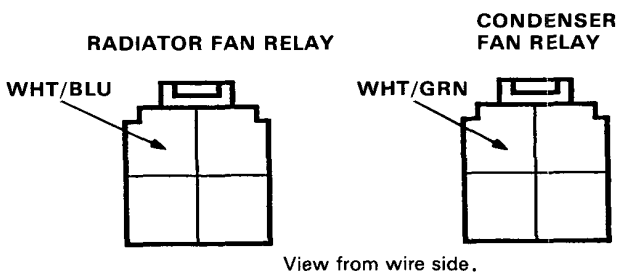

(From page 15-68)

Is there battery voltage?

NO

Repair open in WHT/BLU and/or WHT/GRN wire(s) between:
- **Radiator fan motor and radiator fan relay.**
- **Condenser fan motor and condenser fan relay.**

YES

Repair open in BLK wire(s) between:
- ***Condenser fan relay and body ground or poor ground (LHD: G203, RHD: G204)***
- **Radiator fan relay and body ground or poor ground (G203).**

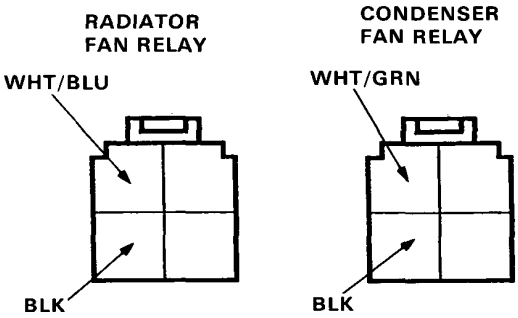

View from wire side.

Flow Chart — Cooling Fan "B"

NOTE: Use the digital circuit tester (07411—0020000) to check.

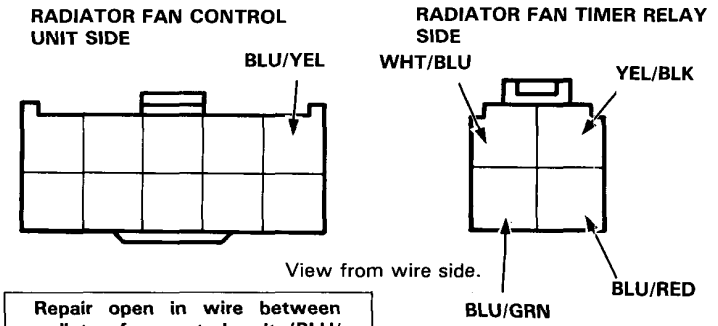

Radiator fan does not run at low speed with BLU shorted to body ground.

Check for continuity between radiator fan timer relay (BLU/RED) and radiator fan control unit (BLU/YEL).

Is there continuity in only one direction?

- NO → **Repair open in wire between radiator fan control unit (BLU/YEL) and radiator fan timer relay (BLU/RED).**
- YES ↓

Check for battery voltage on WHT/BLU terminal.

Is there battery voltage?

- NO → **Repair open in WHT/BLU wire between radiator fan timer relay and radiator fan relay.**
- YES ↓

Turn ignition switch on.

Check for battery voltage on YEL/BLK wire.

Is there battery voltage?

- NO → **Repair open in YEL/BLK between radiator fan timer relay and radiator fan control unit.**
- YES ↓

Using a jumper lead, connect WHT/BLU terminal to BLU/GRN terminal.

Does the radiator fan run at low speed?

- YES → **Replace radiator fan timer relay.**
- NO ↓

Test for open in BLU/GRN wire between radiator fan timer relay and radiator fan timer relay resistor; faulty resistor or poor ground (G202).

Flow Chart —— Cooling Fan "C"

NOTE: Use the digital circuit tester (07411—0020000) to check.

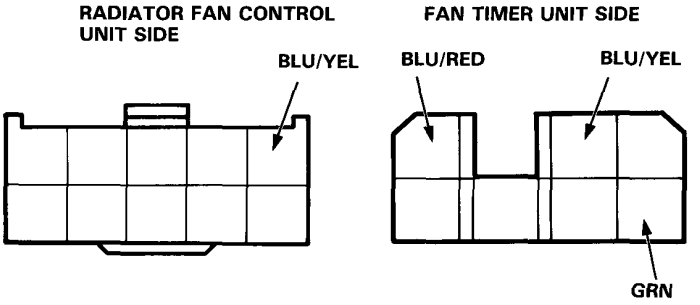

View from wire side.

Condensor fan does not run at low speed with the BLU/YEL shorted to YEL/BLK.

Disconnect 7P connector from fan timer unit and 10P connector from rad fan control unit.

Check for continuity on the BLU/YEL wire between the radiator fan control unit and fan timer unit.

Is there continuity?

- NO → **Repair open in BLU/YEL wire between radiator fan control unit and fan timer unit.**
- YES ↓

Check for continuity at the 7P connector between the BLU/RED and GRN wires.

Is there between 100 and 120 ohms?

- NO → Disconnect condenser fan timer relay.
- YES ↓

Check for continuity between fan timer unit and the condenser fan timer relay on the BLU/RED and GRN wires.

Is there continuity?

- YES → **Replace relay**
- NO → **Repair open in BLU/RED or GRN wire between fan timer unit and condenser fan relay.**

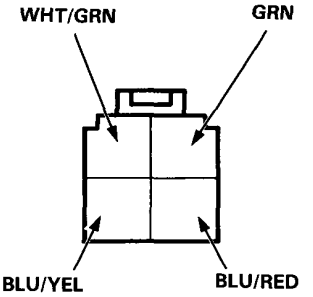

View from wire side.

Check for battery voltage on the WHT/GRN wire terminal.

Is there battery voltage?

- YES → Using a jumper lead, connect the WHT/GRN terminal to the BLU/YEL wire terminal.
- NO → **Repair poor connection of WHT/GRN wire at condenser fan timer relay.**

Does the condenser fan run at low speed?

- YES → **Replace relay.**
- NO → **Test for open in the BLU/YEL wire between condenser fan timer relay and condenser fan timer resistor, faulty resistor, or poor ground (G201).**

Flow Chart —— Cooling Fan "D"

NOTE: Use the digital circuit tester (07411—0020000) to check.

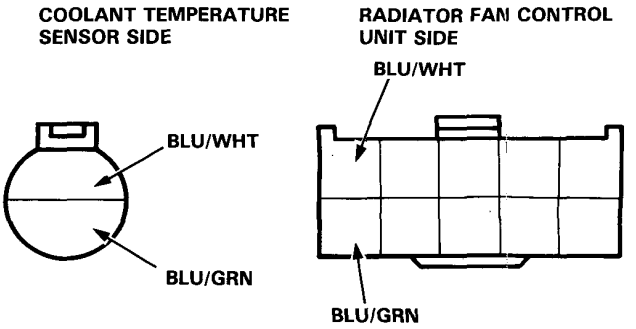

View from wire sides.

Faulty resistance between the BLU/WHT and BLU/GRN wires.

Disconnect 2P at radiator fan temperature sensor.

Test radiator fan temperature sensor (section 16)

Does the radiator fan temperature sensor test good?
- NO → **Replace sensor.**
- YES ↓

Check for continuity on the BLU/WHT wire between radiator fan control unit and radiator fan temperature sensor.

Is there continuity?
- NO → **Repair open in BLU/WHT wire between radiator fan control unit and radiator fan temperature sensor.**
- YES ↓

Check BLU/WHT wire for continuity to body ground.

Is there continuity?
- YES → **Repair short to body ground on BLU/WHT wire.**
- NO ↓

Check for continuity on BLU/GRN wire between radiator fan control unit and radiator fan temperature sensor.

Is there continuity?
- NO → **Repair open in BLU/GRN wire between radiator fan control unit and radiator fan temperature sensor.**
- YES ↓

Check for continuity to body ground on BLU/GRN wire.

Is there continuity?
- YES → **Repair short to body ground.**
- NO ↓

Substitute a known good radiator fan control unit and retest.

CAUTION:

1. Always disconnect the negative cable from the battery whenever replacing air conditioner parts.

2. Keep moisture and dust out of the system. When disconnecting any lines, plug or cap the fittings immediately; don't remove the caps or plugs until just before the lines are reconnected.

3. Before connecting any hose or line, apply a few drops of refrigerant oil to the seat of the O-ring or flare nut.

4. When tightening or loosening a fitting, use a second wrench to support the matching fitting.

5. When discharging the system, don't let refrigerant escape too fast; it will draw the compressor oil out of the system.

6. Add refrigerant oil after replacing the following parts:
   - Condenser ..... 30 cc (1 fl oz)
   - Evaporator ..... 60 cc (2 fl oz)
   - Line or hose ..... 10 cc (1/3 fl oz)
   - Receiver ..... 10 cc (1/3 fl oz)
   - Compressor ..... When a new compressor is installed, drain 30 cc (1 fl oz) of refrigerant oil from the suction fitting on the compressor, unless you are also replacing any of the above parts. Then pro-rate the amount you drain by the amount you should add for the other part(s).

7. Tighten nuts to the following torque:

Line hose or bolt dia. in (mm)		Torque N·m (lb-ft)	Application
Line or hose	7/8 (14.5)	32.5 (23)	· Suction hose (Evaporator side)
	3/4 (12.7)	22 (16)	· Discharge hose (Condenser side) · Condenser pipe
	9/16 (8.0)	13.5 (10)	· Receiver pipe
Bolt	8 mm	30 (22)	· Discharge hose (Compressor side) · Suction hose (Compressor side)

WARNING When handling refrigerant (R-12):

- Always wear eye protection.
- Do not let refrigerant get on your skin or in your eyes. If it does:
  - *Do not rub your eyes or skin.*
  - Splash large quantities of cool water in your eyes or on your skin.
  - Rush to a physician or hospital for immediate treatment. Do not attempt to treat it yourself.
- Keep refrigerant containers (cans of R-12) stored below 40°C (100°F).
- Do not handle or discharge refrigerant in an enclosed area near an open flame: it may ignite and produce a poisonous gas.

Performance Test

The performance test will help determine if the air conditioning system is operating with specifications.

1. Connect gauges as shown.

2. Insert a thermometer in the vent outlet. Determine the relative humidity and ambient air temperature by a portable weather station or calling the local weather station.

3. Test conditions:
   - Avoid direct sunlight.
   - Open engine hood.
   - Open front doors.
   - Set the temperature control dial to max cold and push the vent and fresh a r buttons.
   - Turn the fan switch to MAX.
   - Run the engine at 1,500 RPM.
   - No driver or passengers in vehicle.

4. After running the air conditioning for 10 minutes under the above conditions, read the delivery temperature from the thermometer in the dash vent and the high and low system pressure from the A/C gauges.

5. To complete the charts:
   - Mark the delivery temperature along the vertical line.
   - Mark the intake temperature (ambient air temperature) along the bottom line.
   - Draw a line straight up from the air temperature to the humidity.
   - Mark a point one line above and one line below the humidity level. (10% above and 10% below the humidity level)
   - From each point, draw a horizontal line across to the delivery temperature.
   - The delivery temperature should fall between the two lines.
   - Complete the low side pressure test and high side pressure test in the same way.
   - Any measurements outside the lines way indicate the need for further inspection.

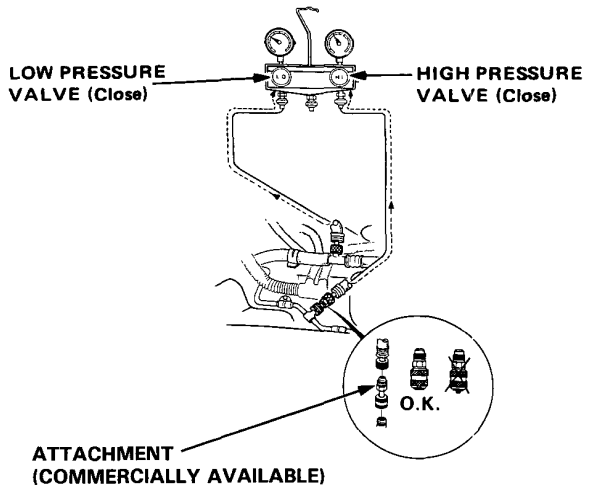

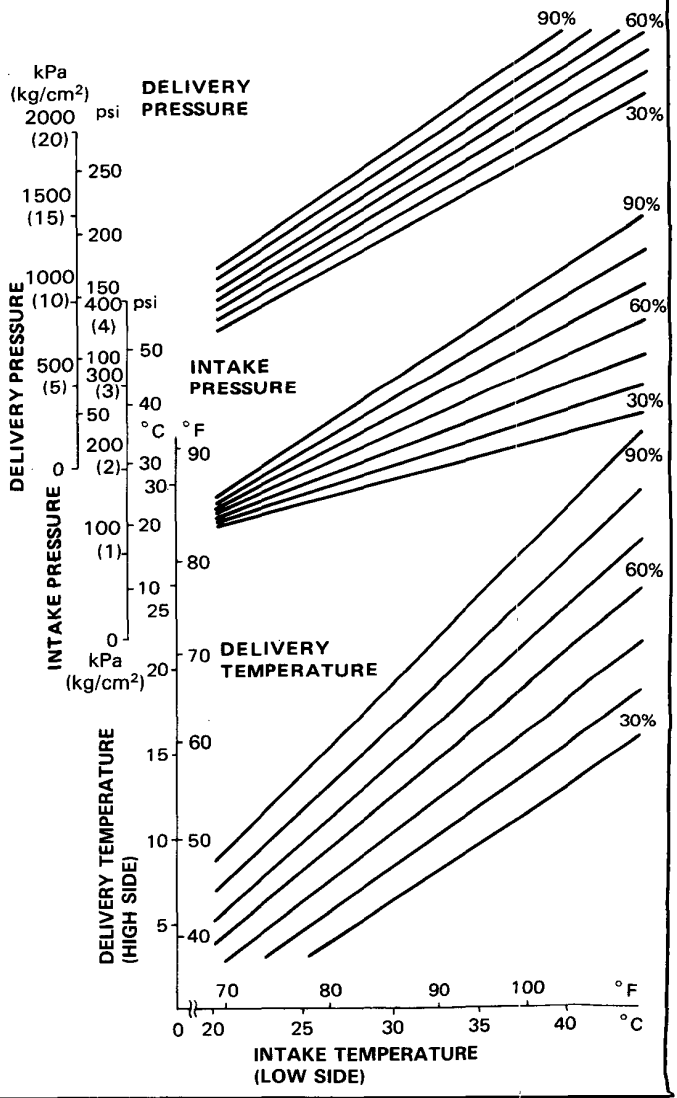

Compressor

Troubleshooting

TEST RESULTS	RELATED SYMPTOMS	PROBABLE CAUSE	REMEDY
Discharge (high) pressure abnormally high (Test on page 15-74)	After stopping compressor, pressure drops to about 196 kPa (28 psi) quickly, and then falls gradually	Air in system	Evacuate system; then recharge Evacuation: page 15-87 Recharging: page 15-88
	No bubbles in sight glass when condenser is cooled by water	Excessive refrigerant in system	Discharge refrigerant as required
	Reduced or no air flow through condenser.	· Clogged condenser or radiator fins · Condenser or radiator fan not working properly.	· Clean · Check voltage and fan rpm
	Line to condenser is excessively hot	Restricted flow of refrigerant in system	Expansion valve
Discharge pressure abnormally low (Test on page 15-74)	Excessive bubbles in sight glass; condenser is not hot	Insufficient refrigerant	· Charge system · Check for leak
	High and low pressures are balanced soon after stopping compressor	· Faulty compressor discharge or inlet valve · Faulty compressor seal	Replace compressor Repair
	Outlet of expansion valve is not frosted, low pressure gauge indicates vacuum	· Faulty expansion valve	Repair or replace
Suction (low) pressure abnormally low (Test on page 15-74)	Excessive bubbles in sight glass; condenser is not hot	Insufficient refrigerant	Check for leaks. Charge as required.
	Expansion valve is not frosted and low pressure line is not cold. Low pressure gauge indicates vacuum.	· Frozen expansion valve · Faulty expansion valve	Replace expansion valve
	Discharge temperature is low and the air flow from vents is restricted	Frozen evaporator	Run the fan with compressor off then check the thermostat and capillary tube.
	Expansion valve frosted	Clogged expansion valve	Clean or replace
	Receiver dryer is cool (should be warm during operation)	Clogged receiver drier	Replace
Suction pressure abnormally high (Test on page 15-74)	Low pressure hose and check joint are cooler than around evaporator	· Expansion valve open too long · Loose expansion valve	Repair or replace
	Suction pressure is lowered when condenser is cooled by water	Excessive refrigerant in system	Discharge refrigerant as necessary
	High and low pressures are balanced too equalized as soon as the compressor is stopped	· Faulty gasket · Faulty high pressure valve · Foreign particle stuck in high pressure valve	Replace compressor
Suction and discharge pressures abnormally high (Test on page 15-74)	Reduced air flow through condenser	· Clogged condenser or radiator fins · Condenser or radiator fan not working properly	· Clean condenser and radiator · Check voltage and fan rpm
	No bubbles in sight glass when condeser is cooled by water	Excessive refrigerant in system	Discharge refrigerant as necessary.
Suction and discharge pressures abnormally low (Test on page 15-74)	Low pressure hose and metal end areas are cooler than evaporator	Clogged or kinked low pressure hose parts	Repair or replace
	Temperature around expansion valve is too low compared with that around receiver-dryer.	Clogged high pressure line	Repair or replace
Refrigerant leaks (Test on page 15-74)	Compressor clutch is dirty	Compressor shaft seal leaking	Replace compressor shaft seal
	Compressor bolt(s) are dirty	Leaking around bolt(s)	Replace compressor
	Compressor gasket is wet with oil	Gasket leaking	Replace compressor

Compressor

Replacement

1. If the compressor is marginally operable, run the engine at idle speed and turn on the air conditioner fan a few minutes, then shut the engine off and disconnect the battery negative terminal.

2. Raise the car on a hoist, remove the front grille, spoiler, bumper and right wheel (section 14).

3. Remove tapping screws, then remove the engine under panel.

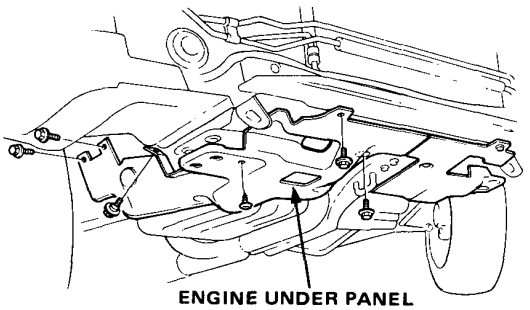

4. Remove the right radius rod.

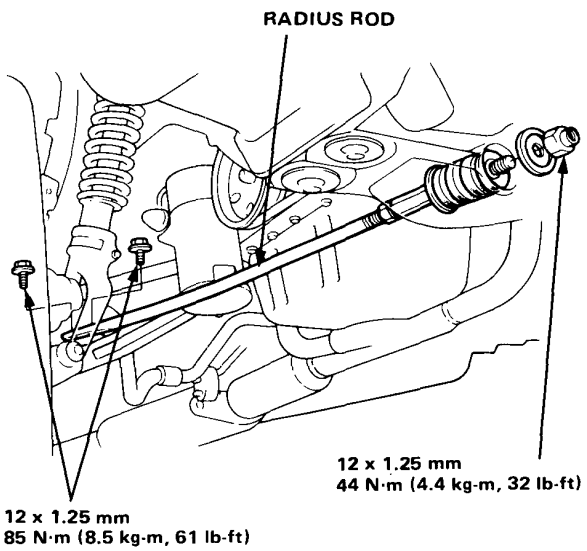

5. Disconnect the compressor clutch connector.

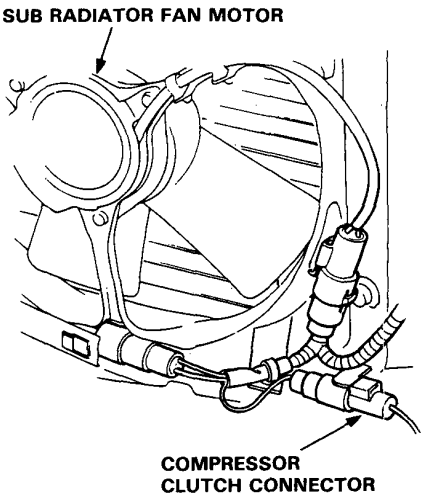

6. Discharge the refrigerant very slowly from the system (page 15-86).

7. Disconnect the suction and discharge hoses from the compressor.

CAUTION: Cap the open fittings immediately to keep moisture and dirt out of the system.

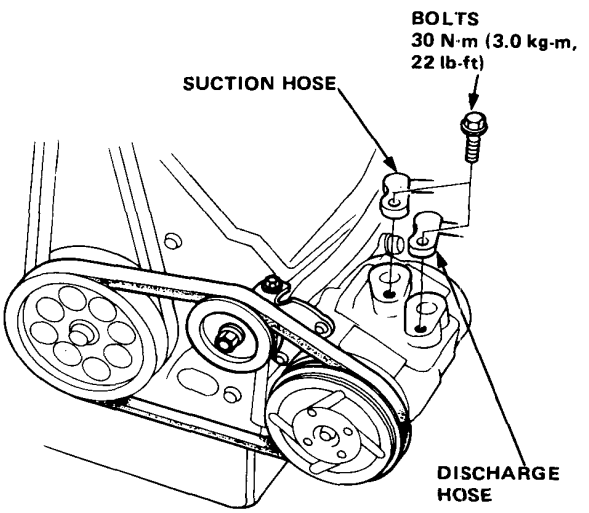

8. Loosen the lock nut, then loosen the compressor adjusting bolt and remove the compressor belt.

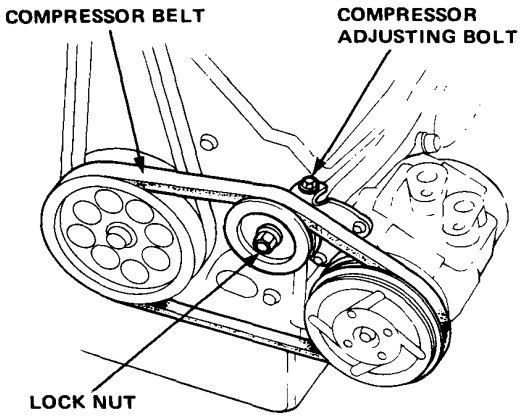

9. Remove the compressor mounting bolts (4) and compressor. Rest the compressor on the front beam.

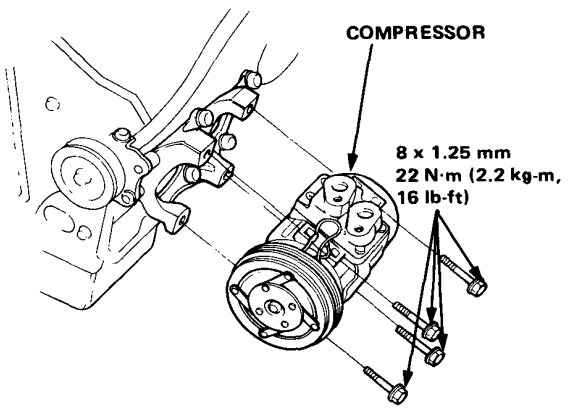

10. Remove the mount bolts (6) and compressor bracket if necessary.

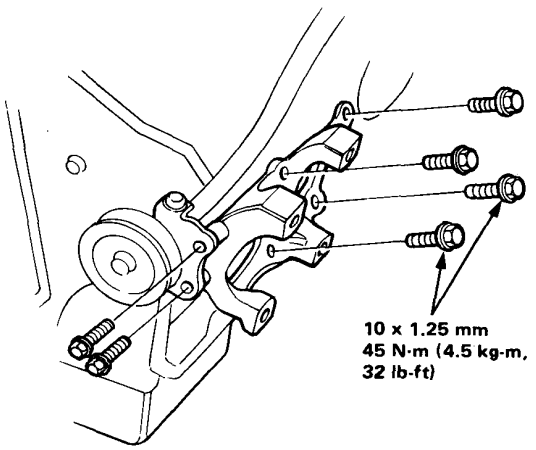

Install the compressor in the reverse order of removal and;

- If a new compressor is installed, drain 30 cm^3 (1 fl oz) of refrigerant oil through the suction fitting on the compressor.
- Adjust the belt.

  BELT TENSION: 9—11 mm (9/32—11/32 in) defrection when 98N (10 kg, 22 lb) force is applied between the pulleys.

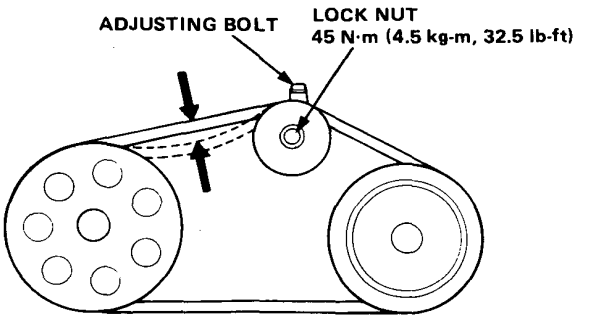

- Charge the system (page 15-86).
- Test the performance (page 15-74).

Clutch Inspection

- Check pulley bearing play and drag by rotating the pulley by hand. Replace the pulley with a new one if it is noisy or has excessive play and drag.

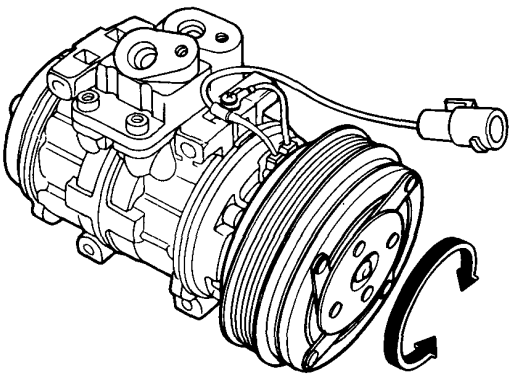

- Check resistance of the stator coil:

Stator Coil Resistance: 3.75 ± 0.2 ohm at 20°C (68°F)

If resistance is not within specifications, replace the coil.

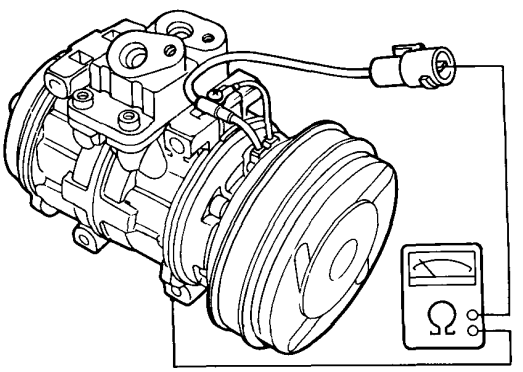

- Tighten the hub nut to 15–17.5 N·m (1.5–1.75 kg-m, 11–12.7 lb-ft) and measure the clearance between the pulley and pressure plate all the way around. If the clearance is not within specified limits, the pressure plate must be removed and shims added or removed as required.

CLEARANCE
0.4–0.7 mm (0.016–0.028 in)

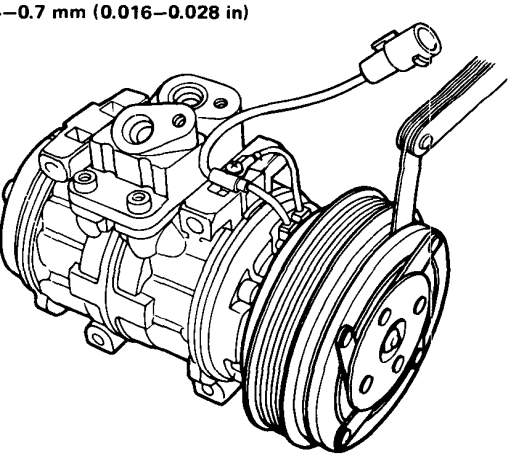

NOTE: The shims are available in six sizes: 0.1 mm, 1.0 mm, 1.25 mm, 1.5 mm, 1.75 mm and 2.0 mm of thickness. 0.1 mm shim is used for minor adjustment.

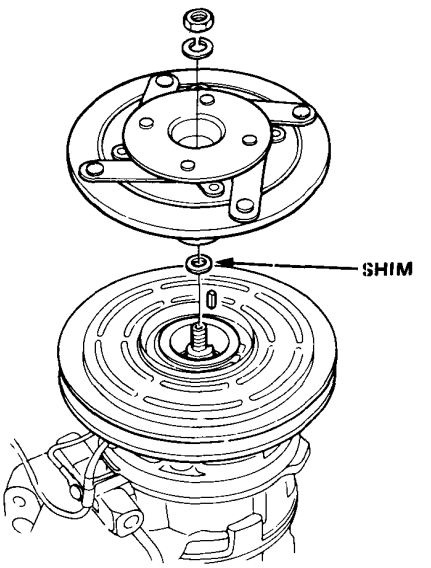

Clutch Overhaul

1. Remove the nut and spring washer while holding the pressure plate.

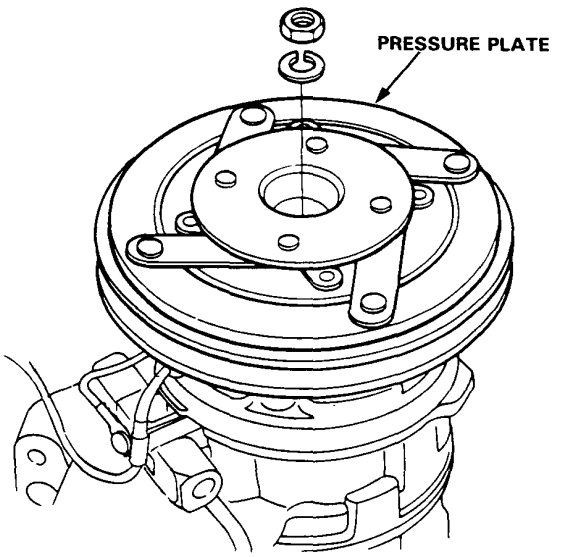

2. Thread the air conditioner clutch remover tool into the pressure plate and remove the pressure plate by screwing in the center bolt.

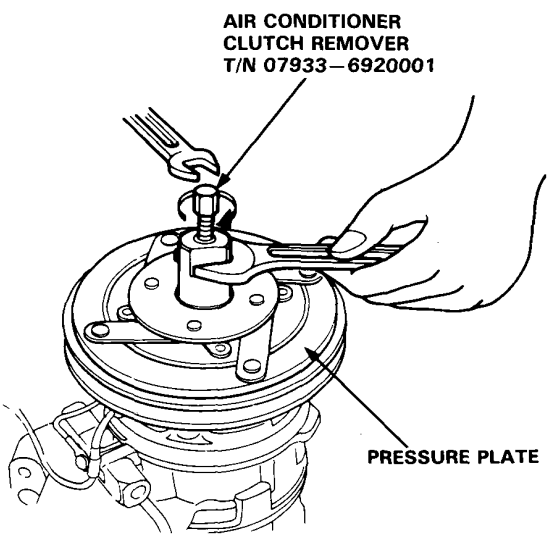

3. Use circlip pliers to take the circlip off and remove the pulley from the shaft with a 2 or 3 jaw puller.

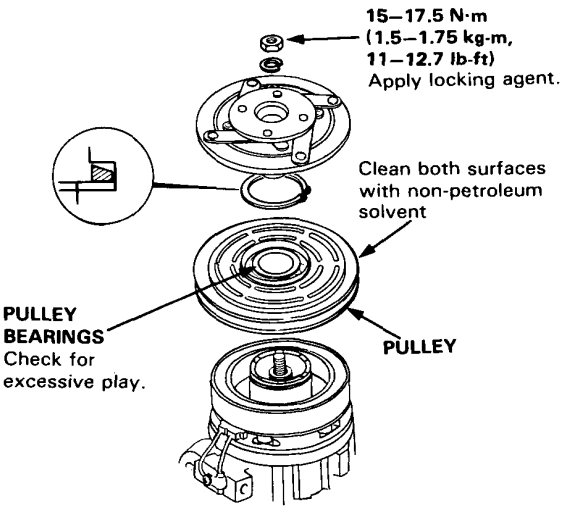

4. Remove the stator coil by removing the large circlip.

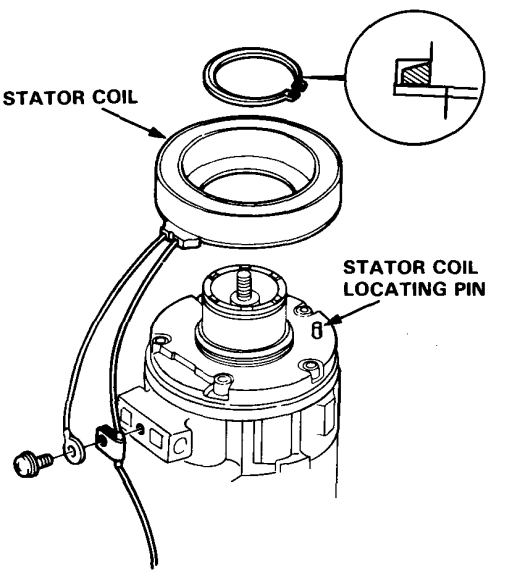

Shaft Seal Replacement

Removal

NOTE: Make sure the suction and discharge joints are plugged with caps.

1. Remove the pressure plate (page 15-79).

NOTE: Removal of the clutch pulley and coil is not necessary.

2. Remove the dust seal set.
Remove the 32 mm snap ring.

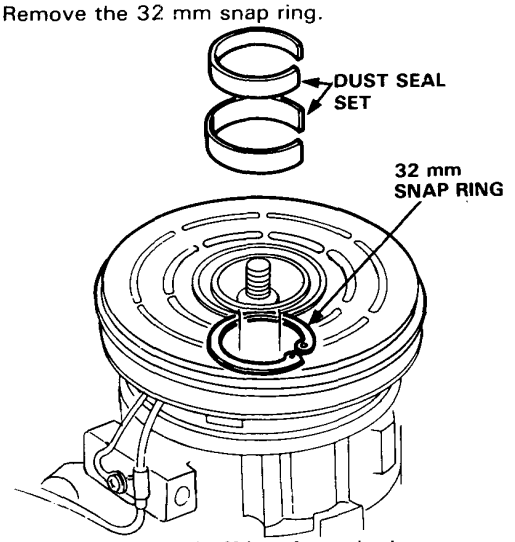

3. Remove the woodruff key from the key way.

NOTE: If the woodruff key is to be reused, be careful not to damage it.

4. Remove the shim(s).

NOTE: After removing, store shim(s) safely in a parts rack.

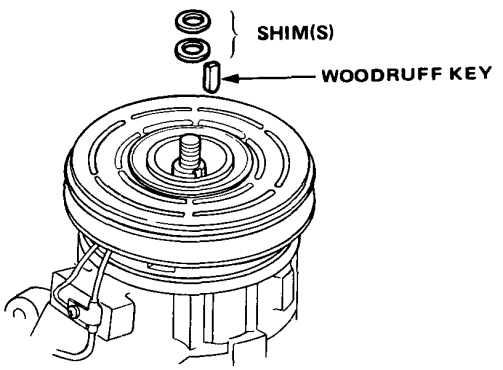

5. Seat the seal plate into the groove of the shaft seal remover.

6. Pull out the seal seat.

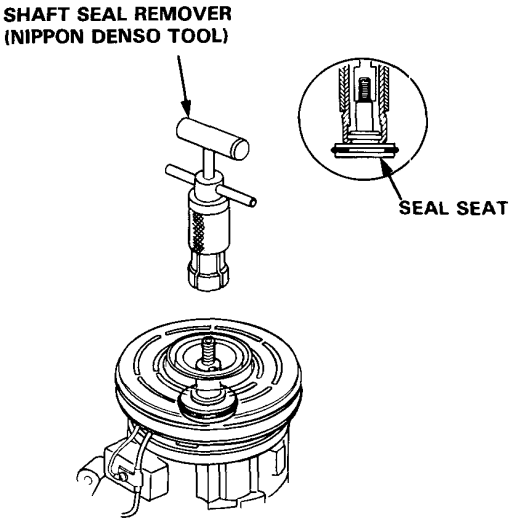

7. Insert the shaft seal remover into the compressor aligning the cutout of the remover with the metal pawl of the seal case.

8. Rotate the Shaft Seal Remover clockwise or counterclockwise to make sure that the cutout is engage with the metal pawl.

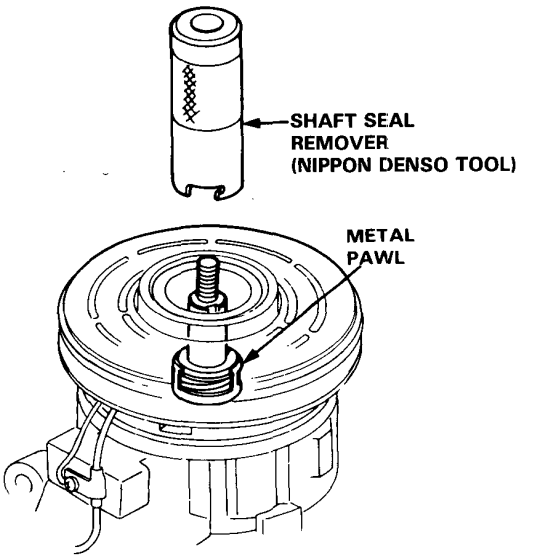

9. Press the remover until it bottoms, then turn it counterclockwise as far as it will go.

10. Withdraw the remover.

11. Lay down the compressor and clean the shaft seal contacting face of the compressor with cleaning solvent.

CAUTION:
- **Keep the cleaning solvent and dirt out of the compressor.**
- **Use only a lint free cloth for cleaning.**
- **Do not spill the refrigerant oil from the compressor. Refill the same amount of the oil if the oil is spilled out.**

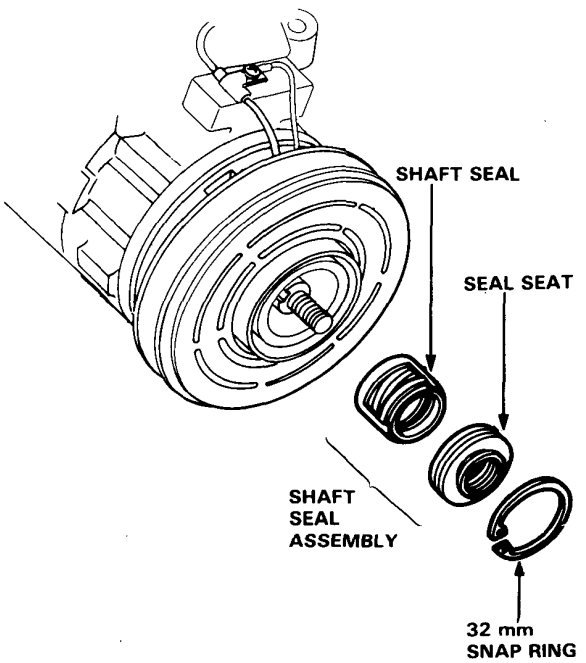

Installation

NOTE: Install the shaft seal assembly after the cleaning solvent is dried out.

1. Clean the new shaft seal thoroughly with cleaning solvent.

2. Lubricate the shaft seal with refrigerant oil (SUNISO 5GS or equivalent) and install it on the shaft seal remover.

NOTE:
- Use only clean refrigerant oil.
- Do not touch the sealing surfaces of the shaft seal after lubricating.

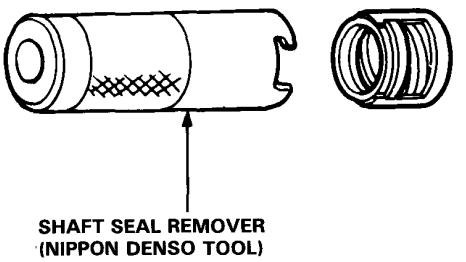

3. Liberally lubricate the compressor shaft with refrigerant oil.

4. Install the shaft seal onto the compressor shaft aligning the seal case flats with the shaft flats.

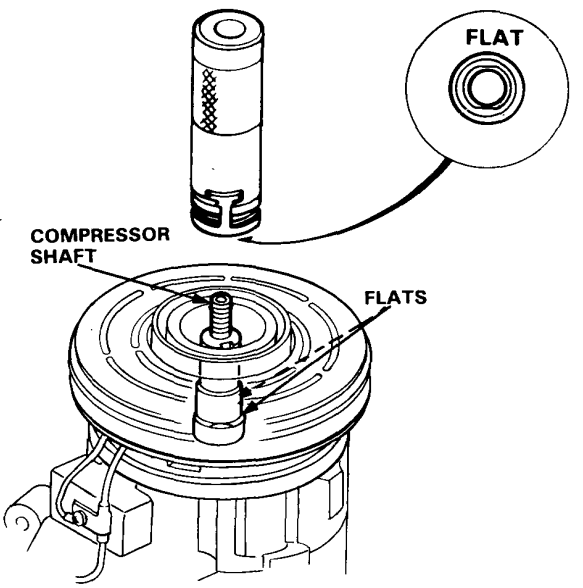

(cont'd)

Shaft Seal Replacement (cont'd)

5. Press the remover until it bottoms, then turn it counterclockwise as far as it will go.

   NOTE: The remover will go lower when the flats are aligned.

6. Turn the remover clockwise, then pull it out.

7. Slide the shaft seal onto the shaft until it seats on the shaft taper as shown.

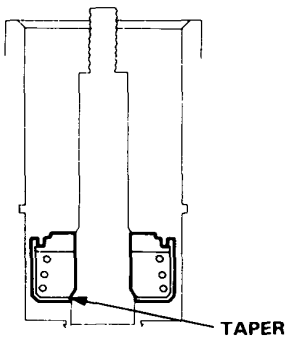

8. Check the inside diameter of the compressor for score marks or foreign particles.

9. Clean the seal seat with cleaning solvent, then lubricate the seal seat with refrigerant oil (SUNISO 5GS or equivalent).

   NOTE:
   - Use only clean refrigerant oil.
   - Do not touch the sealing surface of the seal plate after lubricated.

10. First slide the seal plate into the compressor by hand as far as possible.

11. Press the seal plate with the grip side of the remover.

    CAUTION: Be careful not to damage the compressor.

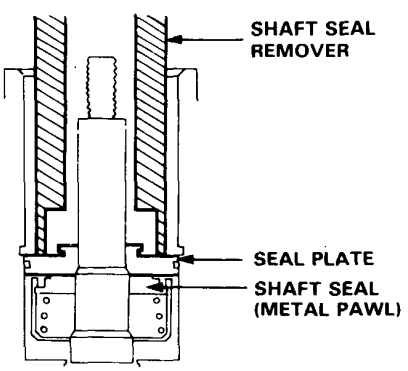

12. Install the 32 mm snap ring with its chamfered edge inside.

13. Press the snap ring with the grip side of the remover.

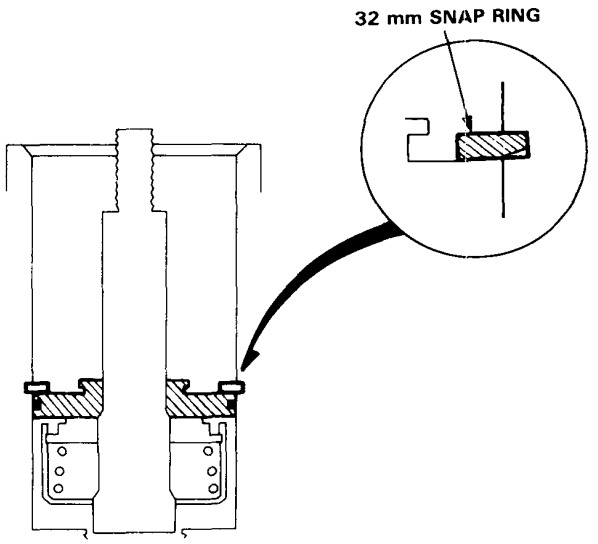

14. Install the shim(s) and woodruff key.

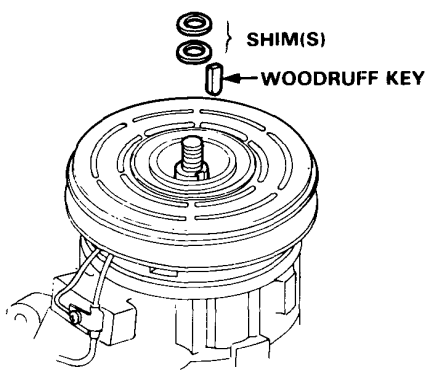

15. Evacuate and charge the compressor and then perform a leak test.

16. Install the pressure plate. Measure the clearance between the pulley and pressure plate all the way around. If the clearance is not within the specified limits, [0.4—0.7 mm (0.016—0.028 in)] shims must be added or removed as required.

Evaporator

Replacement

1. Disconnect the battery negative terminal.
2. Discharge the refrigerant (page 15-86).
3. Disconnect the receiver line and suction hose from the evaporator.

   CAUTION: Cap the open fittings immediately to keep moisture out of the system.

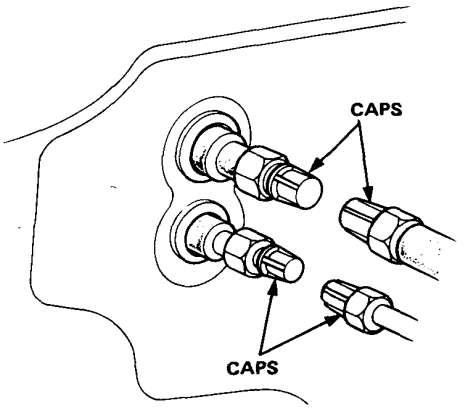

4. Remove the 5 screws, then remove the glove box lower cover and glove box.
5. Remove the 4 screws, then remove the glove box frame and side duct.
6. Disconnect the wire harness from the evaporator temperature sensor connector.

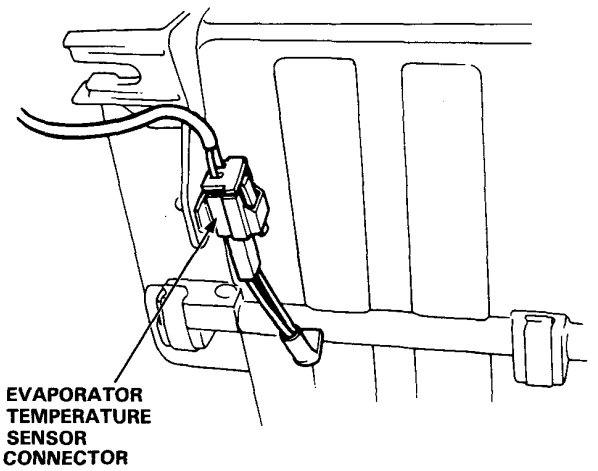

7. Remove the 4 tapping screws and 3 mounting bolts.

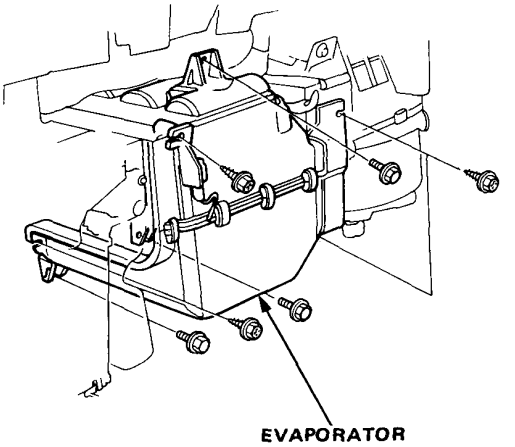

8. Pull the evaporator away from the body.
9. Install in the reverse order of removal, and:
   - Apply a sealant to the grommets.
   - Make sure that there is no air leakage.
10. Charge the system (page 15-87) and test performance (page 15-74).

Evaporator

Overhaul

1. Remove the thermostat switch from the evaporator.
2. Remove the tapping screws and clips from the housing.
3. Carefully separate the housings and remove the evaporator covers.
4. Remove the expansion valve if necessary.

Assemble the evaporator in the reverse order of disassembly, and:

Install the expansion valve capillary tube against the suction line, and wrap it with tape.
Reassemble the upper and lower housings with clips, making sure there are no gaps between them.
Reinstall the evaporator sensor in its original location.

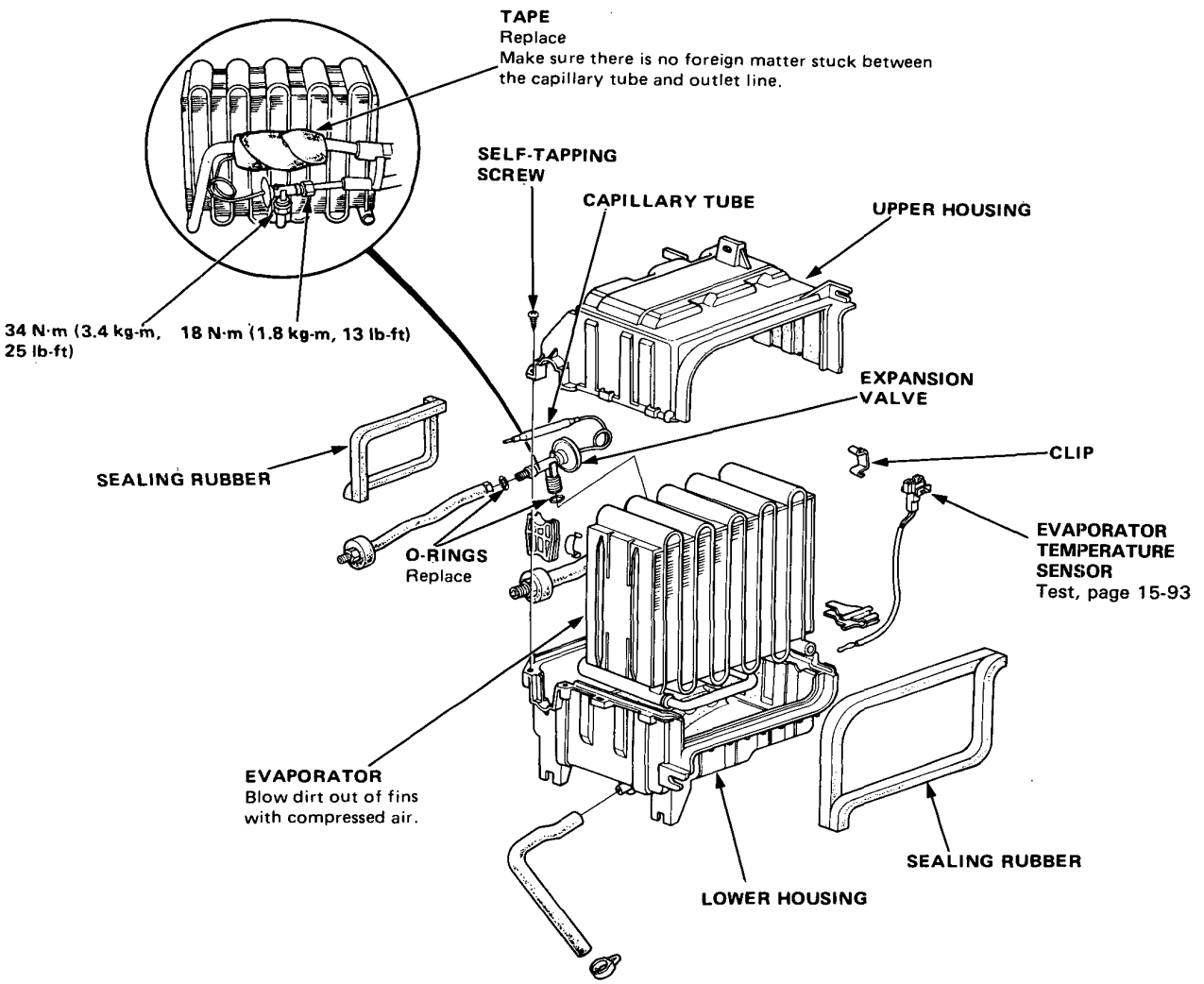

Condenser

Replacement

1. Disconnect the battery negative terminal.
2. Discharge the refrigerant.
3. Remove the front grille (section 14).
4. Disconnect the condenser line and discharge line from the condenser.

   CAUTION: Cap the open fittings immediately to keep moisture and dirt out of system.

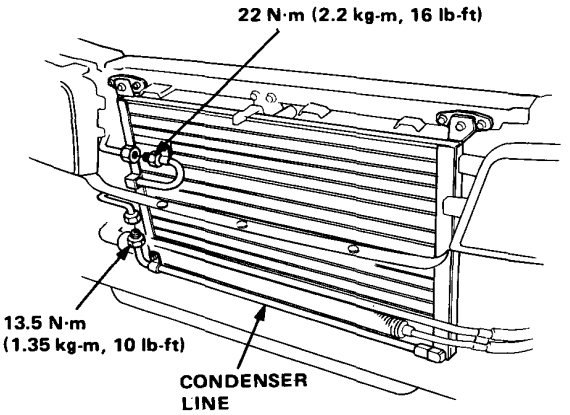

5. Remove the condenser mount bolts (4).
6. Remove the front bulkhead cross member (6 bolts, and nut), then the condenser up from the car.

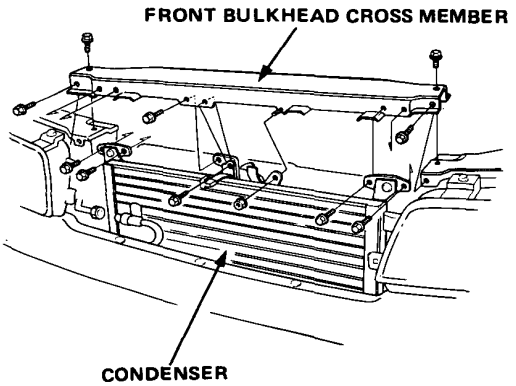

7. Install in the reverse order of removal and:
   - Push the two rubber insulators onto the lower condenser mounts, then set the condenser in place in front of the radiator.

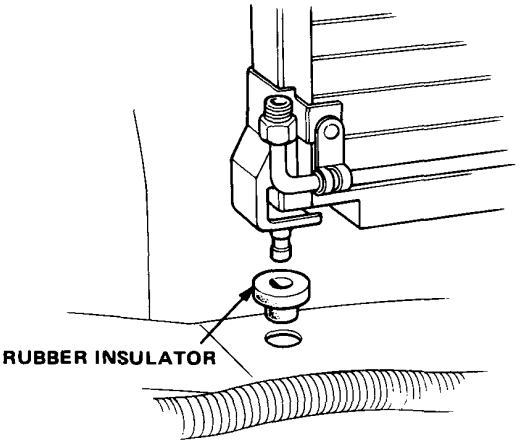

   - When installing the front bulkhead, secure the ground cable to the front bulkhead with a mounting bolt.

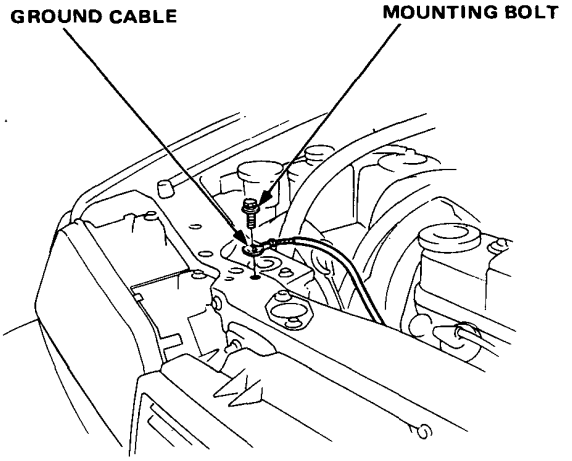

8. Charge the system (page 15-87) and test performance (page 15-74).

Discharge Procedure

WARNING

- **Keep away from open flames. The refrigerant, although nonflammable, will produce a poisonous gas if burned.**
- **Work in a well-ventilated area. Refrigerant evaporates quickly, and can force all the air out of a small enclosed area.**

1. Connect the gauges as shown.
2. Disconnect the center hose of the gauge set and place the free end in a shop towel.
3. Slowly open the high side manifold valve slightly to let refrigerant flow from the center hose only. Do not open the valve too wide. Check the shop towel to make sure no oil is being discharged with the refrigerant.

   CAUTION: If refrigerant is allowed to escape too fast, compressor oil will be drawn out of the system.

4. After the high pressure gauge reading has dropped below 980 kPa (10 kg/cm², 142 psi), open the low side valve to discharge both high and low sides of the system.
5. Note the gauge readings and, as system pressure drops, gradually open both high and low side valves fully until both gauges indicate 0 kPa (0 kg/cm², 0 psi).

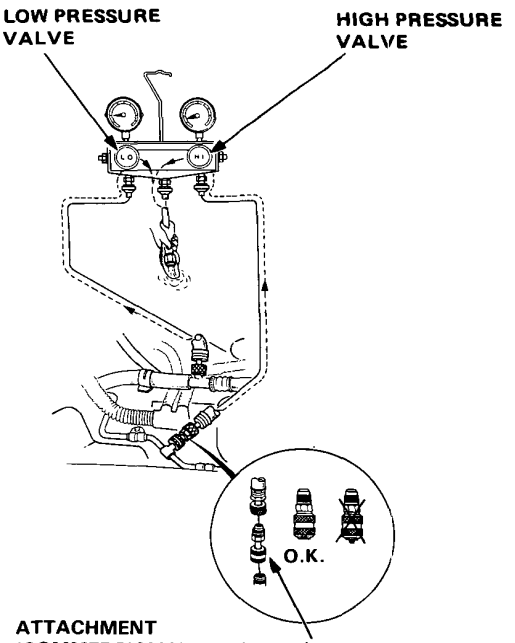

ATTACHMENT (COMMERCIALLY AVAILABLE)
NOTE: Set the attachement to the gauge hose at high pressure side, then install the gauge set as shown.

System Evacuation

1. When an A/C System has been opened to the atmosphere, such as during installation or repair, it must be evacuated using a vacuum pump. (If the system has been open for several days, the receiver/dryer should be replaced).
2. Attach a gauge set and pump as shown, connecting the center charging hose to the pump inlet.
3. Start the pump, then open both gauge valves. Run the pump for about 15 minutes. Close the valves and stop the pump. The low gauge should indicate above 700 mm Hg (27 in-Hg) and remain steady with the valves closed.
   NOTE: If low pressure does not reach more than 700 mm Hg (27 in-Hg) in 15 minutes, there is probably a leak in the system. Check for leaks, and repair (see Leak Test below).
4. If there are no leaks, open the valves and continue pumping for at least another 15 minutes, then close both valves, stop the pump and disconnect it from the center charging hose.

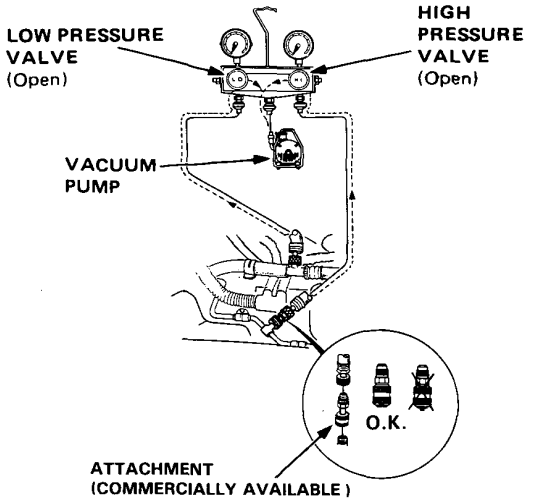

NOTE: Set the attachement to the gauge hose at high pressure side, then install the gauge set as shown.

Leak Test

WARNING When handling refrigrant (R-12):
- **Always wear eye protection.**
- **Do not let refrigerant get on your skin or in your eyes. If it does:**
  - **Do not rub your eyes or skin.**
  - **Splash large quantities of cool water in your eyes or on your skin.**
  - **Rush to a physician or hospital for immediate treatment. Do not attempt to treat it yourself.**
- **Keep refrigerant containers (cans of R-12) stored below 40°C (100°F).**
- **Keep away from open flame. Refrigerant, although non-flammable, will produce poisonous gas if burned.**
- **Work in well-ventilated area. Refrigerant evaporates quickly, and can force all the air out of a small, enclosed area.**

1. Attach a refrigerant supply and gauge set as shown, with all valves closed. Then open the refrigerant supply valve on the can.
2. Loosen the center charging hose fitting at the gauge to purge any air from the hose, until it hisses for a few seconds, then tighten it again.
3. Open both gauge valves to charge the system to about 100 kPa (1.0 kg/cm^2, 14 psi), then close the supply valve.
4. Check the system for leaks using a leak detector.
5. If you find leaks that require the system to be opened (to repair or replace hoses, fittings, etc.), release any charge in the system according to the Discharge Procedure on the previous page.
6. After checking and repairing leaks, the system must be evacuated (see System Evacuation above).

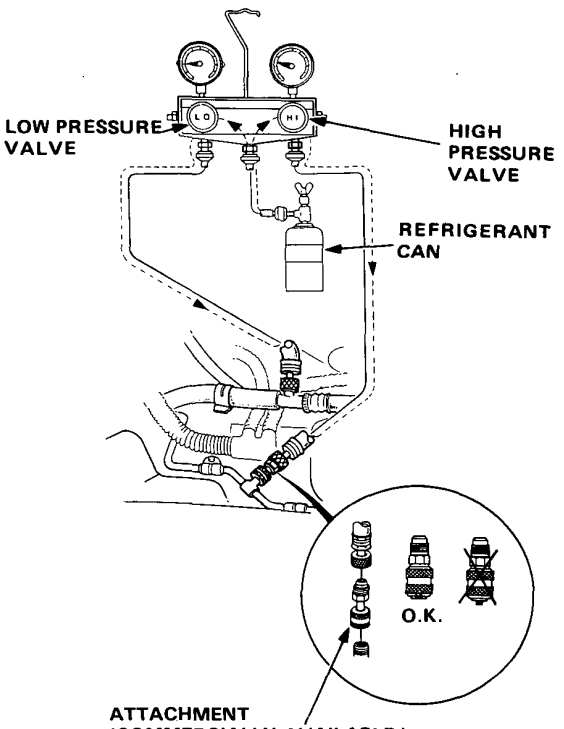

NOTE: Set the attachement to the gauge hose at high pressure side, then install the gauge set as shown.

System Charging

Charging Procedures

WARNING **Always wear eye protection when charging the system.**

The A/C system may be charged with refrigerant by either Vapor or Liquid method:

CAUTION: Do not overcharge the system; the compressor will be damaged.

VAPOR CHARGING, through the low side:

1. Connect a gauge set and refrigerant can (right side up) as shown, with the gauge valves closed. Purge air from the charging hose by opening the refrigerant valve, then, loosening the center connector at the gauge, letting it hiss for a few seconds, and tightening it.
2. Open the low gauge valve (adjust it as necessary so pressure does not exceed 280 kPa (2.8 kg/cm², 40 psi) while charging).
3. Start the engine and switch the air conditioner fan on MAX.

   NOTE:
   - Run the engine below 1,500 rpm.
   - If using warm water to speed charging, do not submerge the entire can in the water.
   - Keep water temperature below 40°C (104°F).

4. When adding the second or third can, keep the refrigerant can right side-up. Charge the system with 850—950 g (30—33 oz) of refrigerant.
5. When fully charged, close the gauge valves, then the valve on the can. Slowly disconnect the refrigerant hose from the center gauge connection to allow excess refrigerant to escape. Quickly remove the gauges from the system to minimize refrigerant loss.

LIQUID CHARGE through the high pressure side:

Following the charging station manufacturer's instructions, charge the system with 850 – 950 g (30 – 33 oz) of refrigerant.

WARNING

- **Do not use disposable cans to charge through the high pressure side of the system. System pressure could transfer into the can causing it to explode. Use only the bulk supply of refrigerant from the charging station.**
- **Do not run the engine during liquid charge; the compressor will be damaged.**

NOTE: After system charging, check the idle boost on section 6.

Vapor Charging

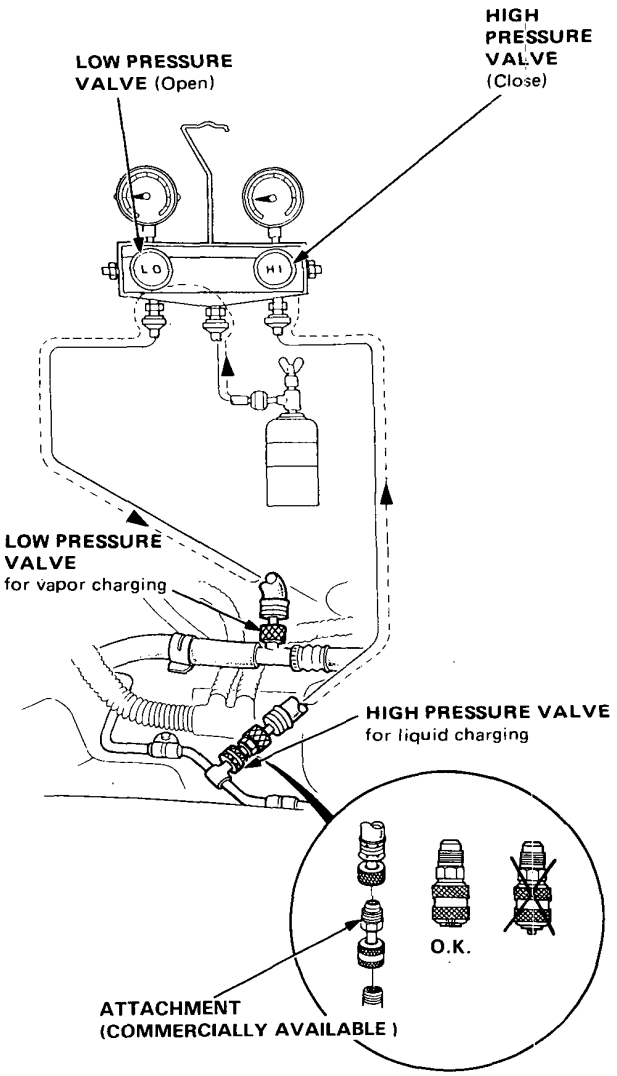

NOTE: Set the attachement to the gauge hose at high pressure side first, then install the gauge set as shown. When disconnecting the gauge hose at high pressure side, remove the attachment from the high pressure charging valve.

Climate Control Unit

Removal:

1. Remove the screws, then remove the front console (See Section 14).

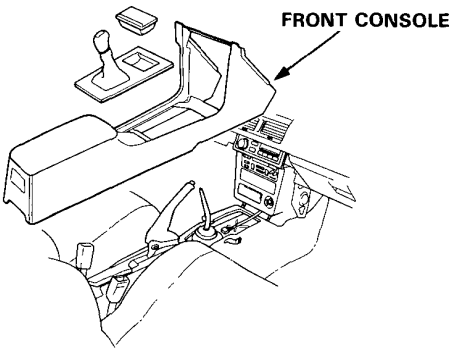

NOTE: Be careful not to break the pawls on the front console.

2. Remove the screws (4), then pull out the climate control unit.

3. Disconnect the wire harness from the climate control unit before removing.

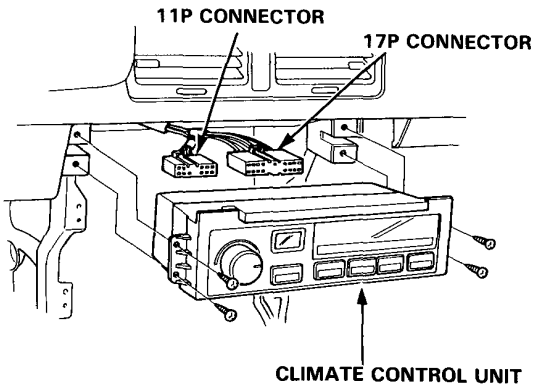

Installation:
Install the Climate control unit in the reverse order of removal.

Coolant Temperature Sensor

Removal:

1. Disconnect the 2P connector of the coolant temperature sensor from the heater assembly stay.

2. Remove the heater assembly clamp.

3. Pull out the coolant temperature sensor from the heater assembly as shown.

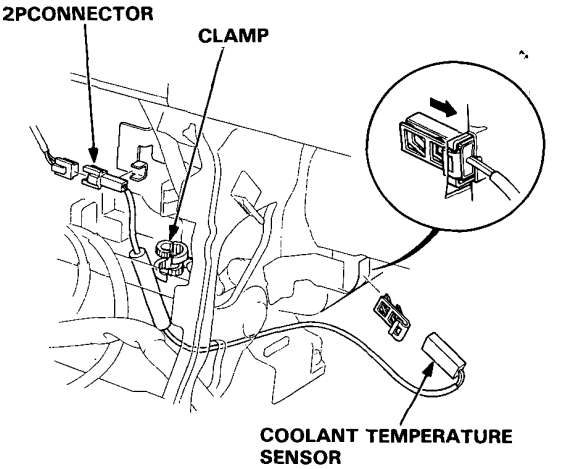

Installation:
Install the coolant temperature sensor in the reverse order of removal.

Ambient Temperature Sensor

1. Remove the front grille (See Section 14).

2. Remove the screw, disconnect the wire harness and then remove the ambient temperature sensor.

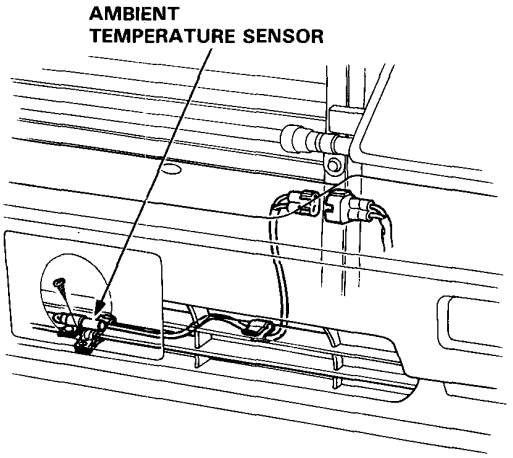

NOTE: Be careful not to damage the front grille and front bumper.

Installation:
Install the ambient temperature sensor in the reverse order of removal.

Sunlight Sensor

Removal:
1. Remove the dashboard (See section 14).

2. Unscrew the sunlight sensor from the dashboard and disconnect the wire harness.

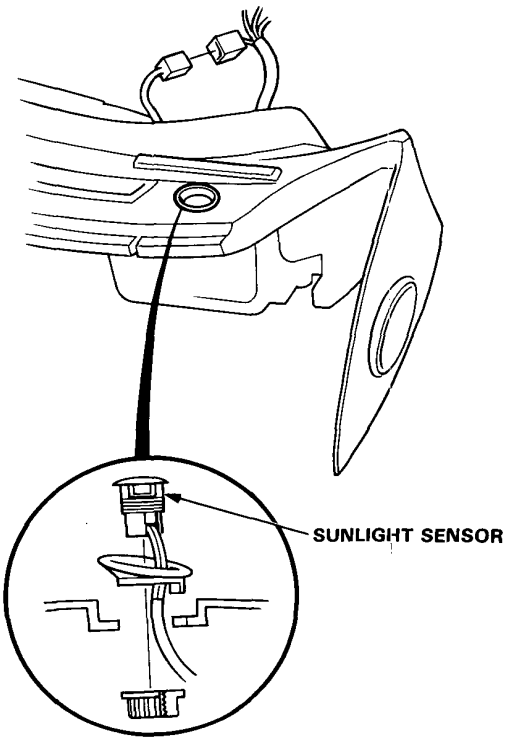

NOTE: Be careful not to damage the dashboard.

Installation:
Install the Sunlight Sensor in the reverse order of removal.

In-car Temperature Sensor

The in-car temperature sensor assembly includes a small fan (aspirator fan) to draw air past the sensor.

Removal:

1. Remove the console (See Section 14).
2. Remove the mounting screws (3) and remove the in-car sensor assembly.

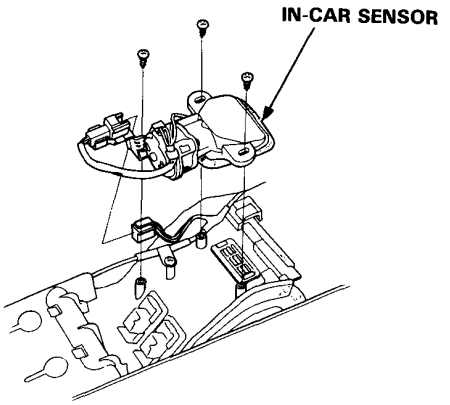

NOTE: Be careful not to damage the center console.

Installation:
Install the in-car temperature sensor assembly in the reverse order of removal.

Aspirator Fan

Connect battery positive to the YEL/BLK terminal of the connector and negative to the GRN terminal to check whether the fan motor runs.

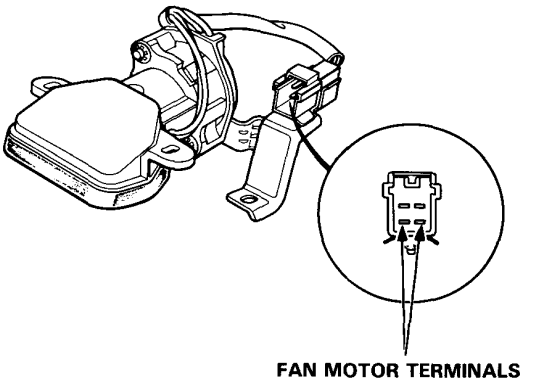

Component Testing

In-car Temperature Sensor

Compare the resistance reading between terminals of the in-car temperature sensor with specifications shown in the following graph: should be within specification.

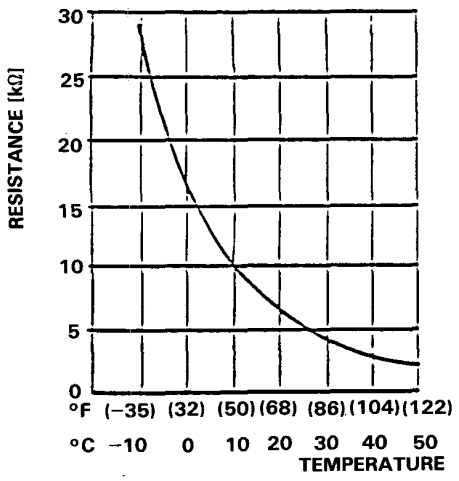

CAUTION: The sensor uses a thermistor which can be damaged if high current is applied to it during testing. Therefore, use a circuit tester with a measuring current of 1 mA or less.

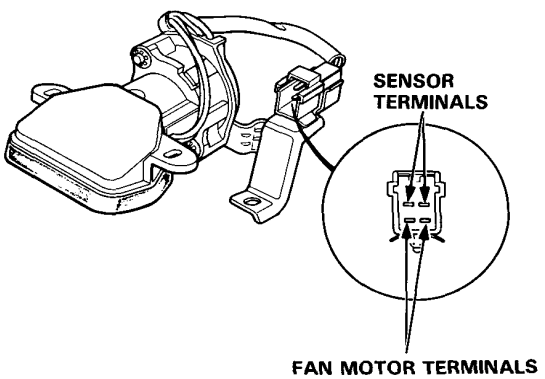

Ambient Temperature Sensor

Compare the resistance reading between terminals of the ambient temperature sensor with specifications shown in the following graph: should be within specification.

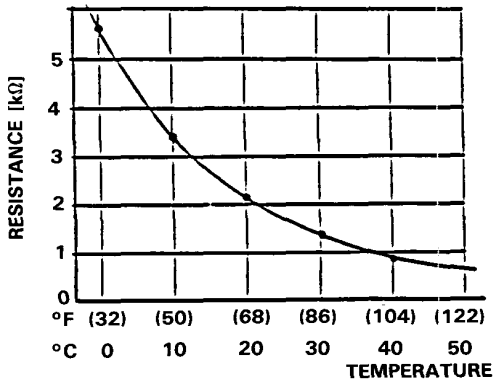

CAUTION: The sensor uses a thermistor which can be damaged if high current is applied to it during testing. Therefore, use a circuit tester with a measuring current of 1 mA or less.

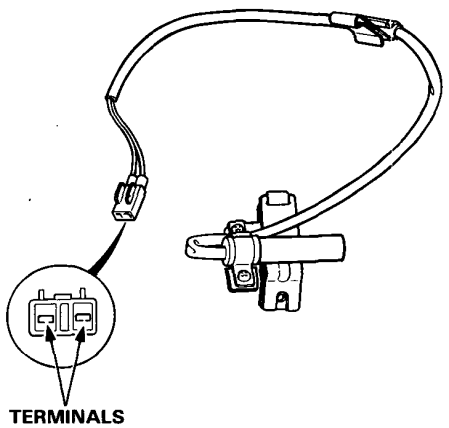

Coolant Temperature Sensor

Compare the resistance reading between terminals of the coolant temperature sensor with specifications shown in the following graph: should be within specification.

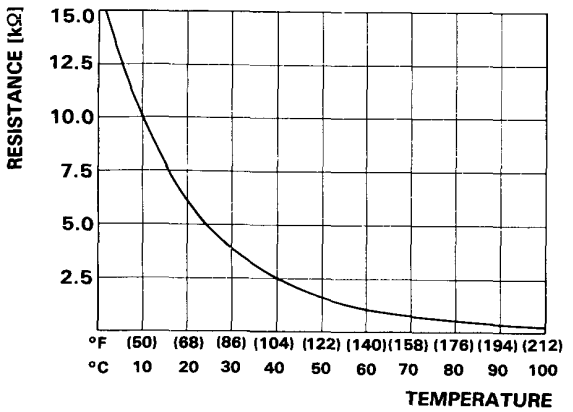

CAUTION: The sensor uses a thermistor which can be damaged if high current is applied to it during testing. Therefore, use a circuit tester with a measuring current of 1 mA or less.

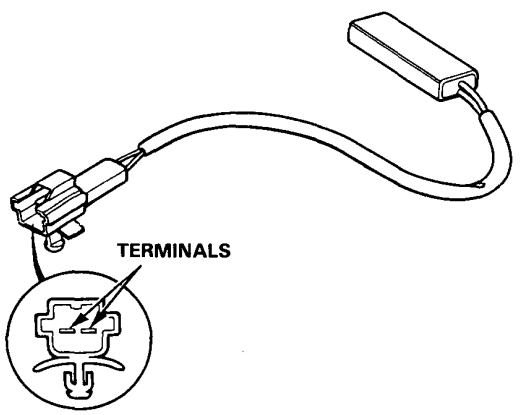

Evaporator Temperature Sensor

Compare the resistance reading between terminals of the evaporator temperature sensor with specification shown in the following graph below: should be within specification.

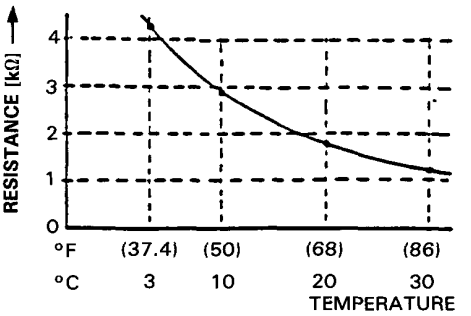

CAUTION: The sensor uses a thermistor which can be damaged if high current is applied to it during testing. Therefore, use a circuit tester with a measuring current of 1 mA or less.

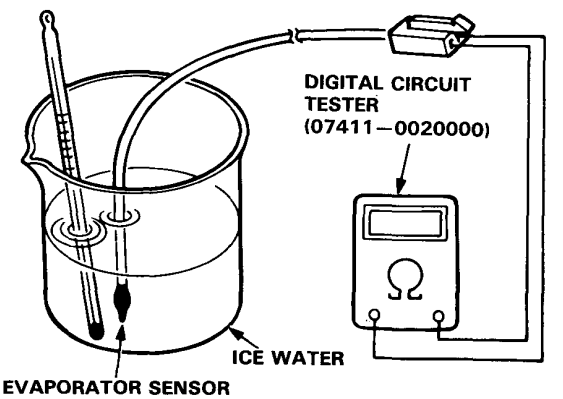

Component Testing

Air Mix Control Motor

1. Measure the resistance between the No. 3 and 5 terminals.

   - Resistance: 4 kΩ

2. Check the motor operation by briefly connecting the battery (12 V) positive to the No. 2 terminal and negative to the No. 1 terminal.

3. Reverse the wires to be sure the motor will run in both directions.

   CAUTION: Be sure to disconnect the battery from the motor as soon as the motor has started. Failure to do so will damage motor.

4. Connect a battery (12 V) to the motor (positive to No. 2 and negative to No. 1), and measure the resistance between the terminals No. 4 and No. 5. Resistance should be approximately 1.2 KΩ at COOL and 4.0 KΩ at HOT. Also check the resistances with the battery polarity reversed.

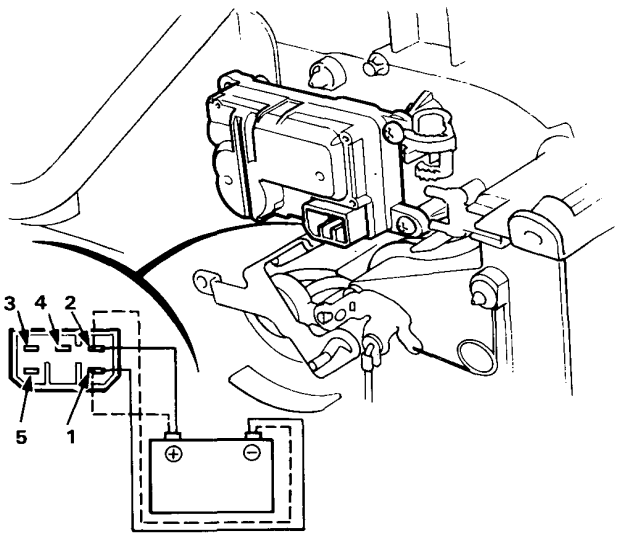

View from terminal side

Recirculation Control Motor

1. Connect the battery positive to No. 2 terminal of the recirculation control motor and negative to the No. 1 terminal.

   - The motor should run.

2. With the battery still connected, connect the ohmmeter probes to the No. 5 and 4 terminals.

   - The ohmmeter should continue to cycle back and forth but hesitates slightly longer when indicating continuity.

3. Then connect the ohmmeter to terminals No. 3 and 5.

   - The ohmmeter should continue to cycle back and forth but hesitates slightly longer when indicating continuity.

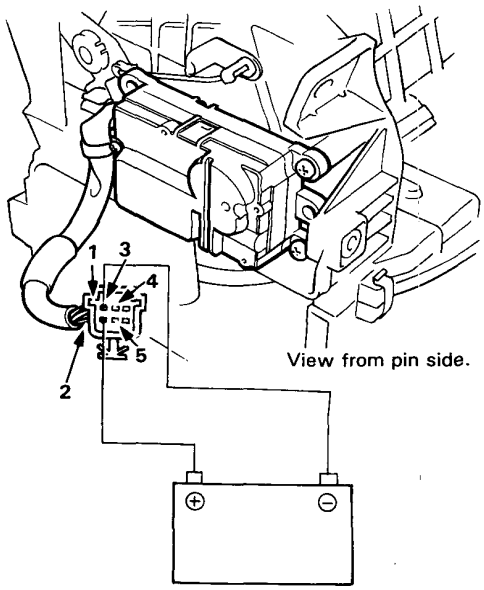

Function Control Motor

1. Measure the resistance between the No. 3 and 5 terminals.

   - Resistance: 4 kΩ

2. Check the motor operation by briefly connecting the battery positive to the No. 2 terminal and negative to the No. 1 terminal.

3. Reverse the wires to be sure the motor will run in both directions.

   CAUTION: Be sure to disconnect the battery from the motor as soon as the motor has started. Failure to do so will damage the motor.

4. Connect a battery to the motor (positive to No. 2 and negative to No. 1), and measure the resistance between the terminals No. 4 and No. 5. Resistance should be approximately 1.2 kΩ at VENT and 4.0 kΩ at DEF. Also check the resistances with the battery polarity reversed.

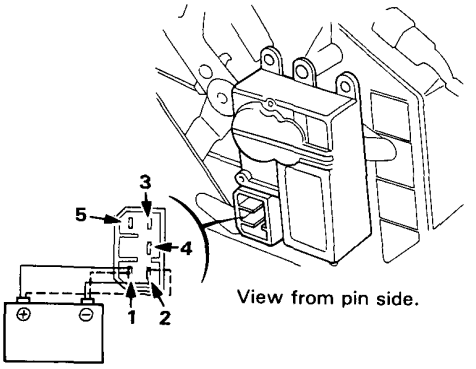

Relay

NOTE: All A/C system relays are similar.

1. Check for continuity between terminals ① and ③.

2. Connect a 12 V battery across terminals ② and ④. There should be continuity between terminals ① and ③.

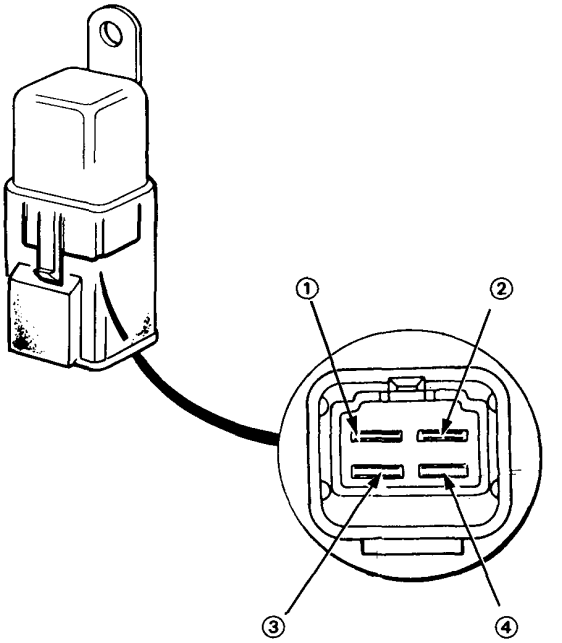

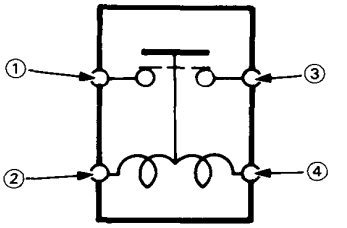

Special Tool/Troubleshooting Precautions

Special Tool

Ref. No.	Tool Number	Description	Q'ty	Remarks
①	07GAC—SE00200	Fuel Sender Wrench	1	

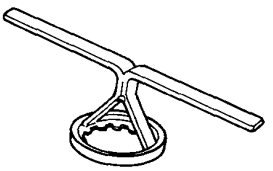

①

Troubleshooting Precautions

Before Troubleshooting

- Check the main fuse and the fuse box.
- Check the battery for damage, state of charge, and clean and tight connections.
- Check the alternator belt tension.

CAUTION:
- **Do not quick-charge a battery unless the battery ground cable has been disconnected, or you will damage the alternator diodes.**
- **Do not attempt to crank the engine with the battery ground cable connected incompletely or you will severely damage the wiring.**

While You're Working

- Make sure connectors are clean, and have no loose pins or receptacles.
- Make sure multiple pin connectors are packed with grease (except watertight connectors).

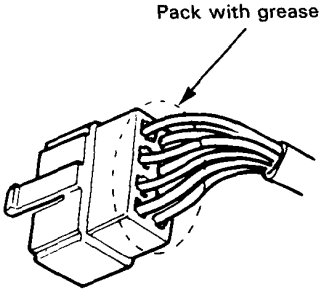

CAUTION:
- **Do not pull the wires when disconnecting a connector, pull only the connector housings.**
- **When connecting a connector, push it until it clicks into place.**

Schematic Symbols

BATTERY	GROUND		FUSE	COIL, SOLENOID	CIGARETTE LIGHTER
or	Ground terminal	Component ground			
RESISTOR	**VARIABLE RESISTOR**	**THERMISTOR**	**IGNITION SWITCH**	**BULB**	**HEATER**
MOTOR	**PUMP**	**CIRCUIT BREAKER**	**HORN**	**DIODE**	**SPEAKER, BUZZER**

ANTENNA		TRANSISTOR (Tr)
Mast	Window	
RELAY (In normal condition)		**CONDENSER**
Normal open relay	Normal closed relay	
SWITCH (In normal condition)		**LUMINOUS DIODE (LED)**
Normal open switch	Normal closed switch	
CONNECTION	**CONNECTOR**	**REED SWITCH**
Input / Output	Male / Female	

Wire Color Codes

The following abbreviations are used to identify wire colors in the circuit schematics.

WHT ..... White
YEL ..... Yellow
BLK ..... Black
BLU ..... Blue
GRN ..... Green
RED ..... Red
ORN ..... Orange
PNK ..... Pink
BRN ..... Brown
GRY ..... Gray
LT BLU ..... Light Blue
LT GRN ..... Light Green

Wire insulator has one color or one color with another color stripe. The second color is the stripe.

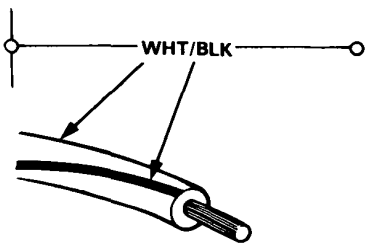

Relays and Control Unit Locations

Engine Compartment

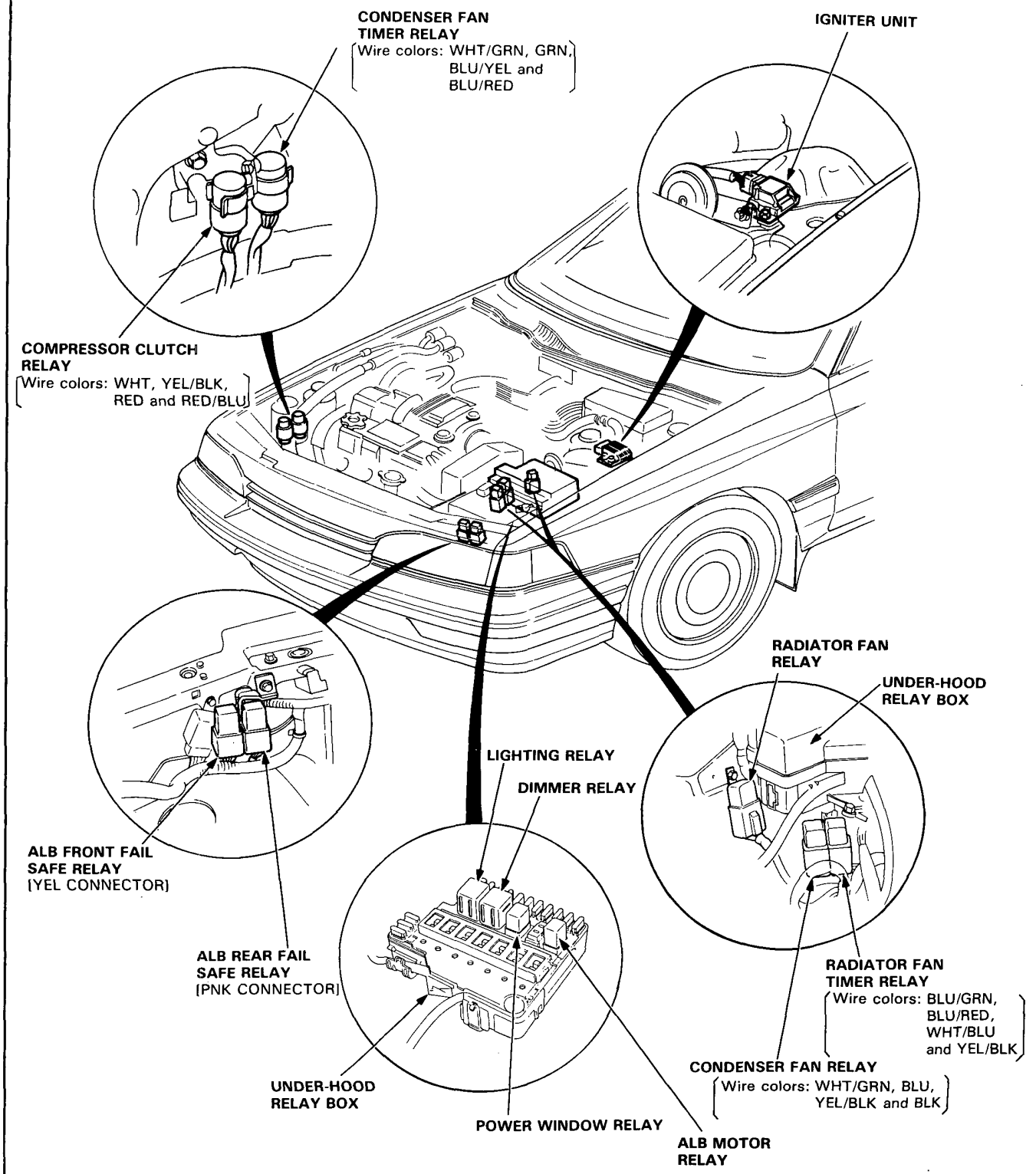

Floor and Seat

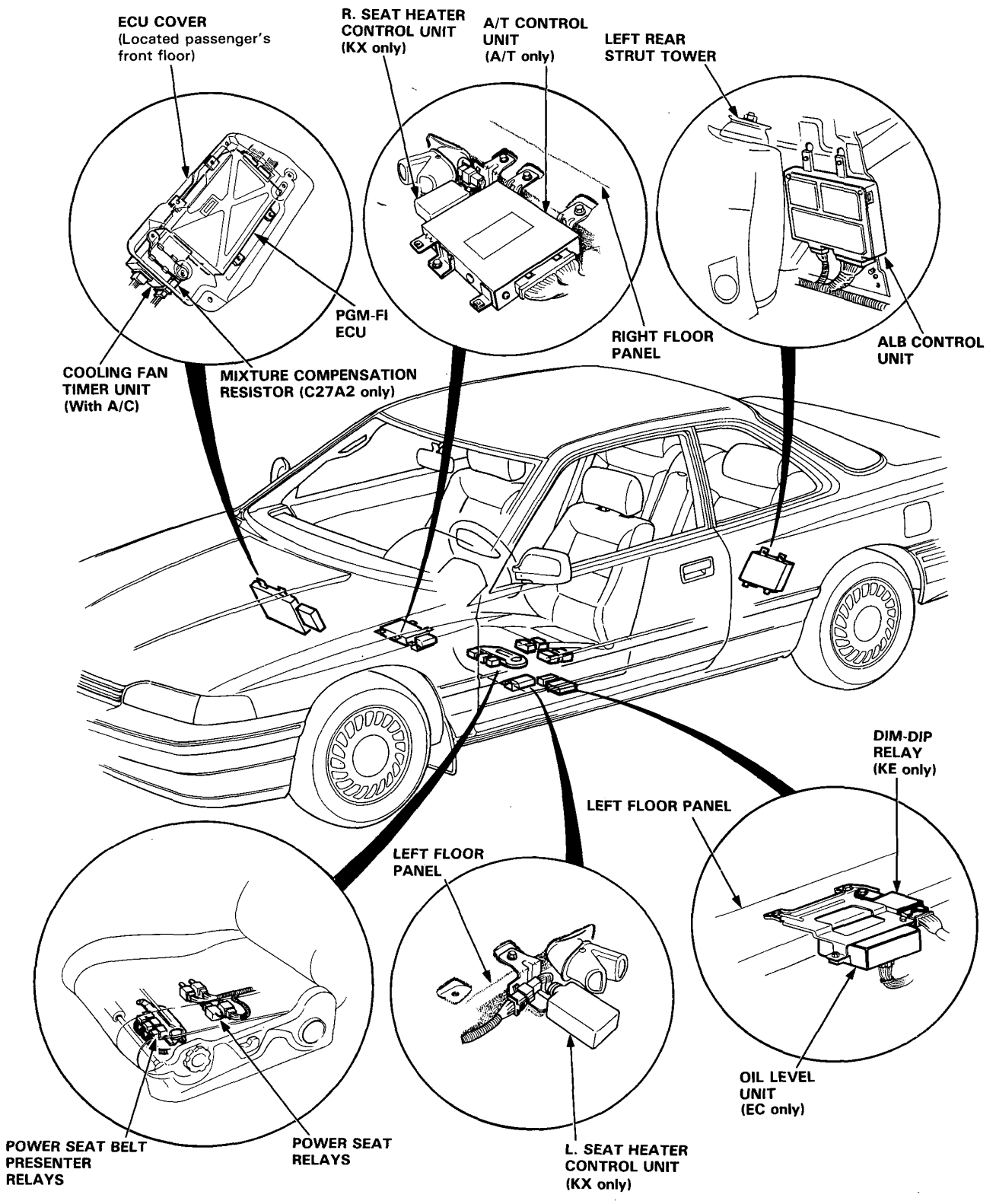

Relays and Control Unit Locations

Dashboard

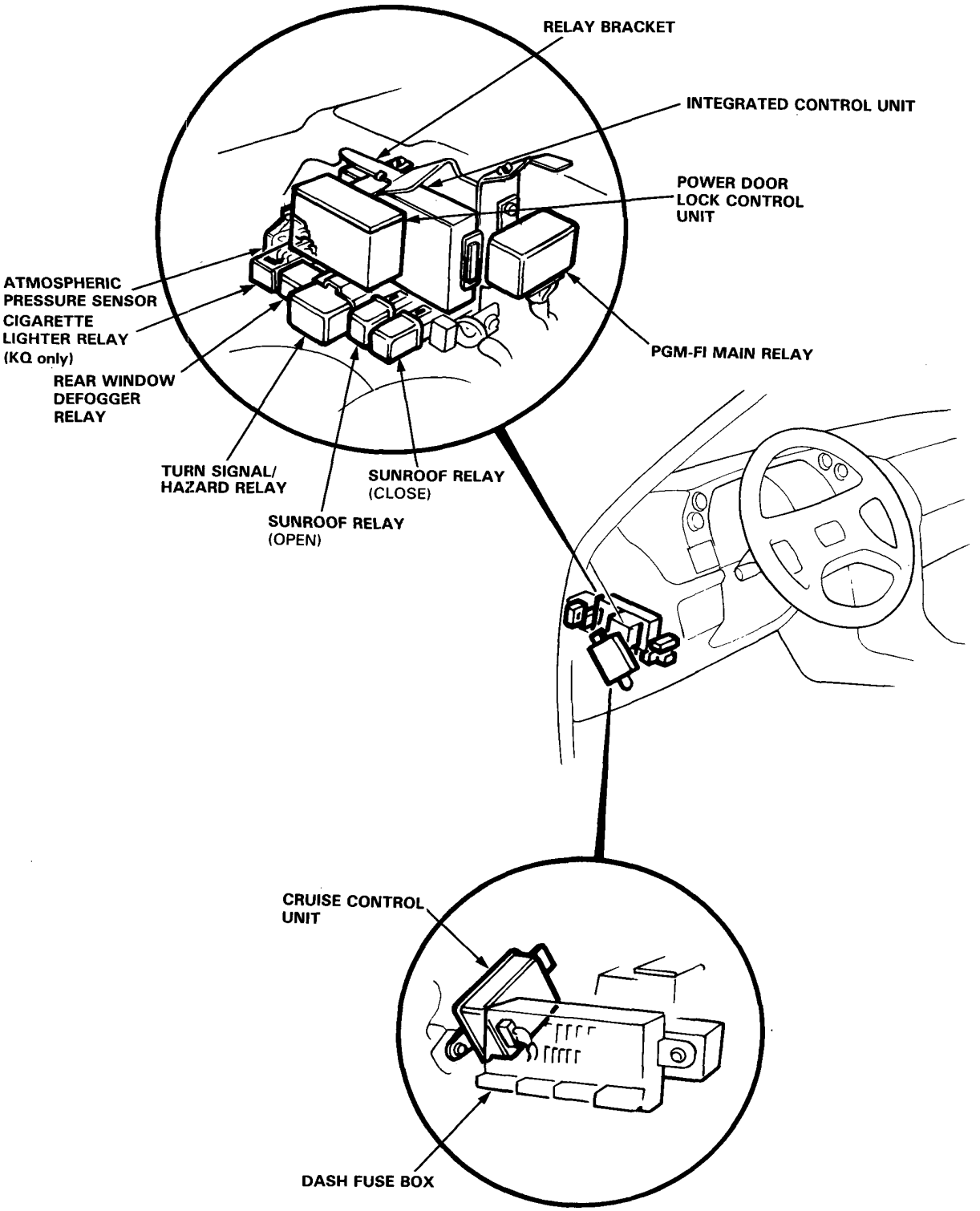

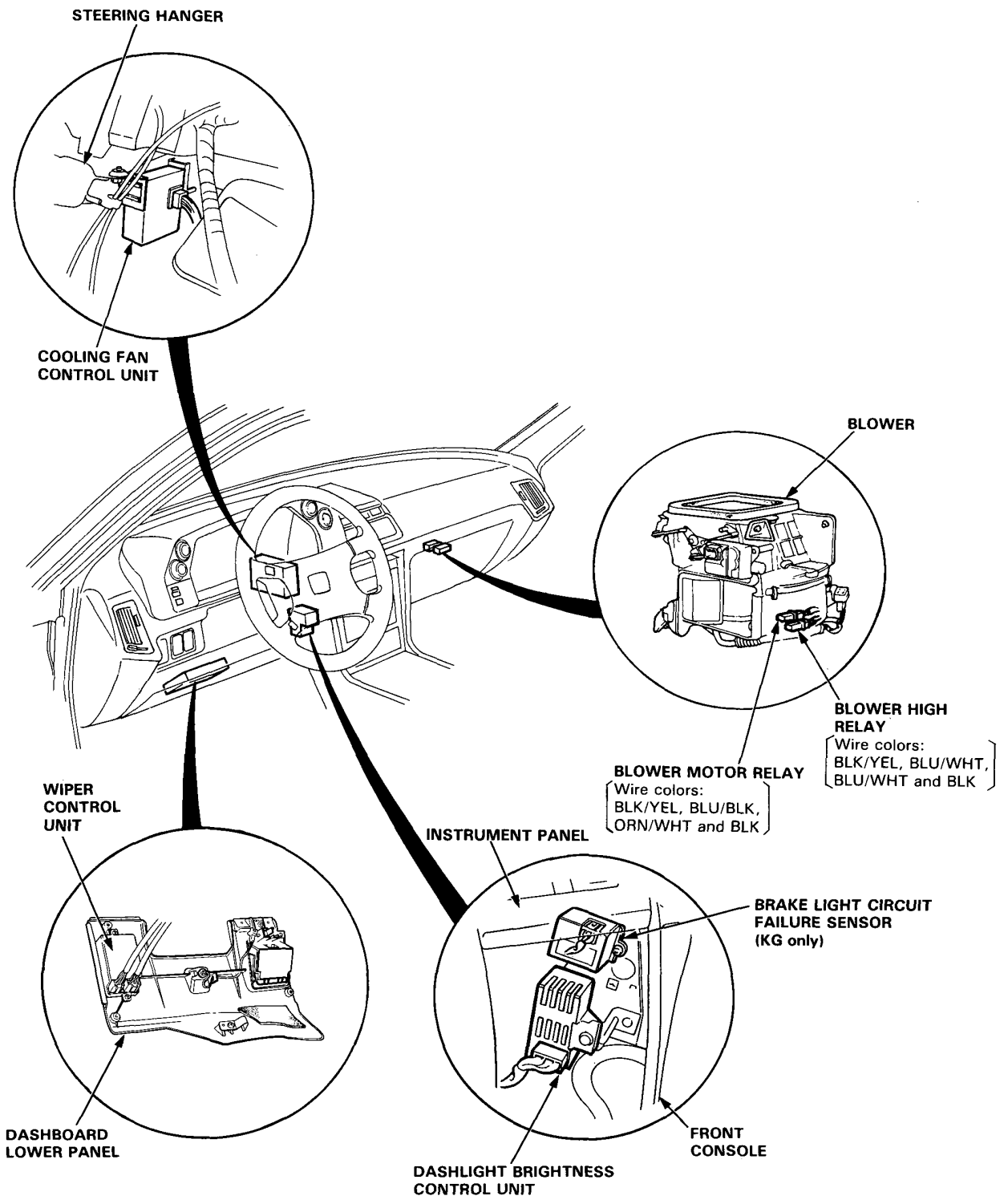
STEERING HANGER
COOLING FAN CONTROL UNIT
BLOWER
BLOWER HIGH RELAY
Wire colors: BLK/YEL, BLU/WHT, BLU/WHT and BLK
BLOWER MOTOR RELAY
Wire colors: BLK/YEL, BLU/BLK, ORN/WHT and BLK
WIPER CONTROL UNIT
INSTRUMENT PANEL
BRAKE LIGHT CIRCUIT FAILURE SENSOR (KG only)
DASHBOARD LOWER PANEL
FRONT CONSOLE
DASHLIGHT BRIGHTNESS CONTROL UNIT

Relays and Control Unit Locations

Door

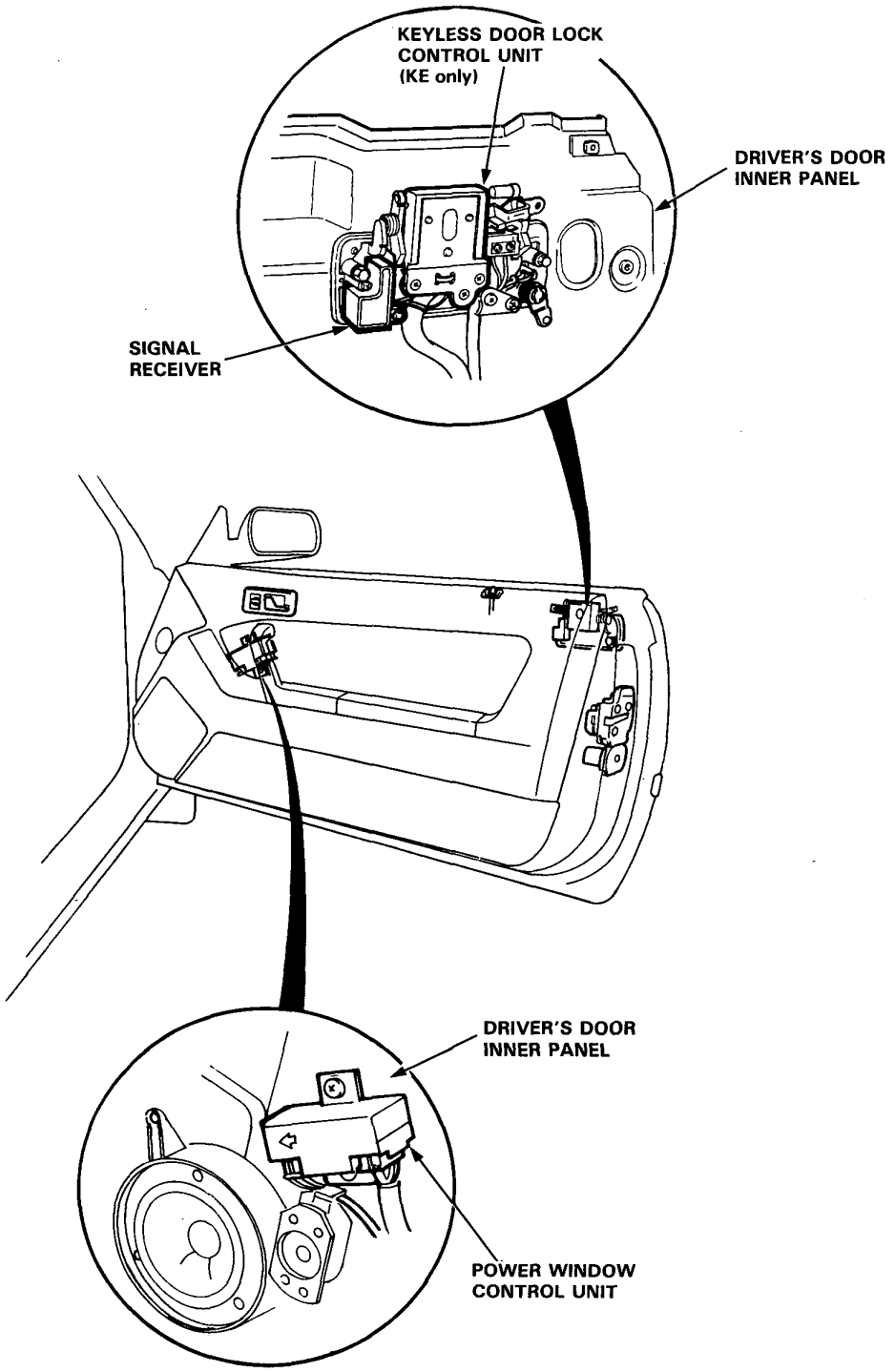

Wire Harness and Ground Locations

Engine Compartment

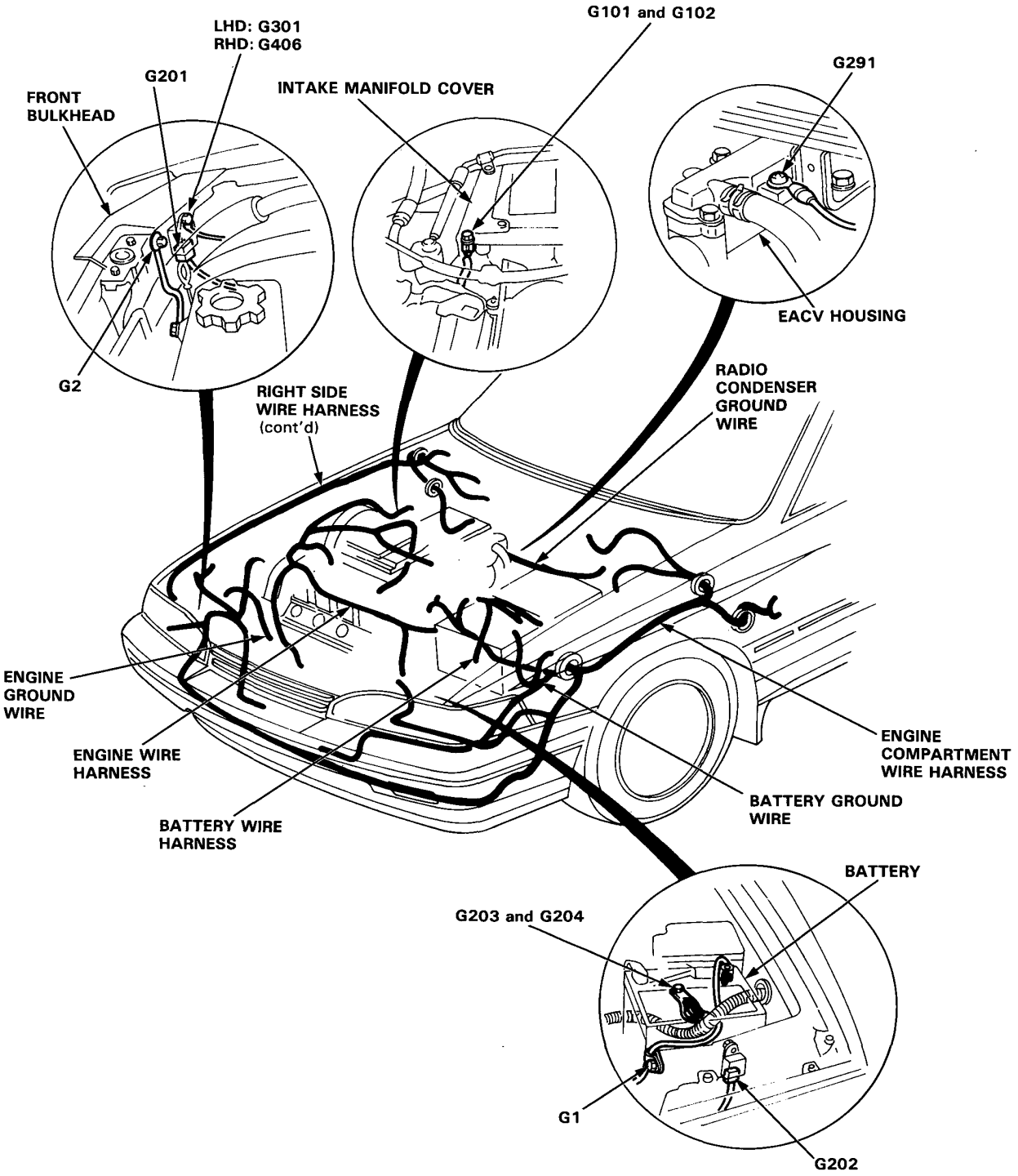

Wire Harness and Ground Locations

Floor (LHD)

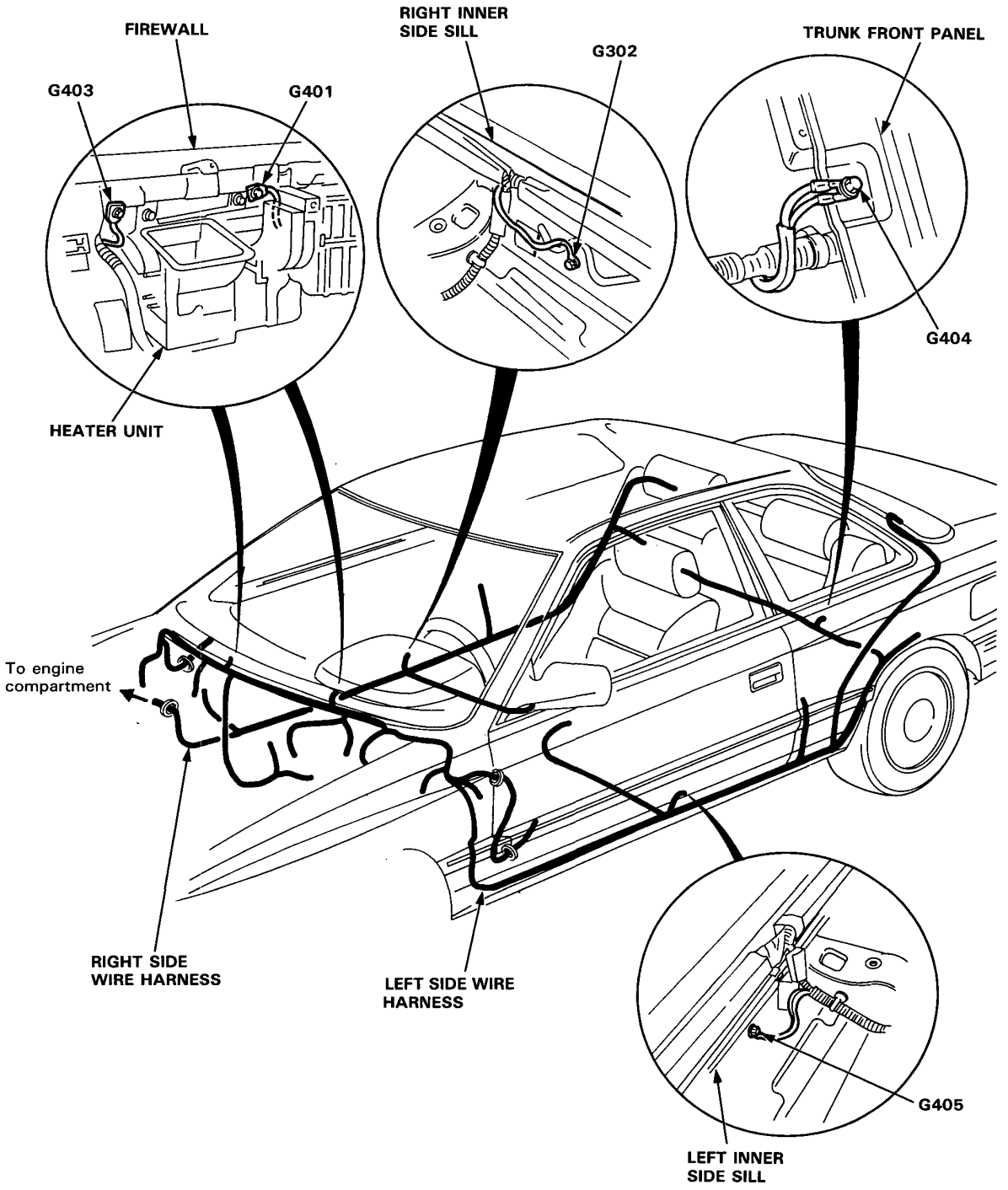

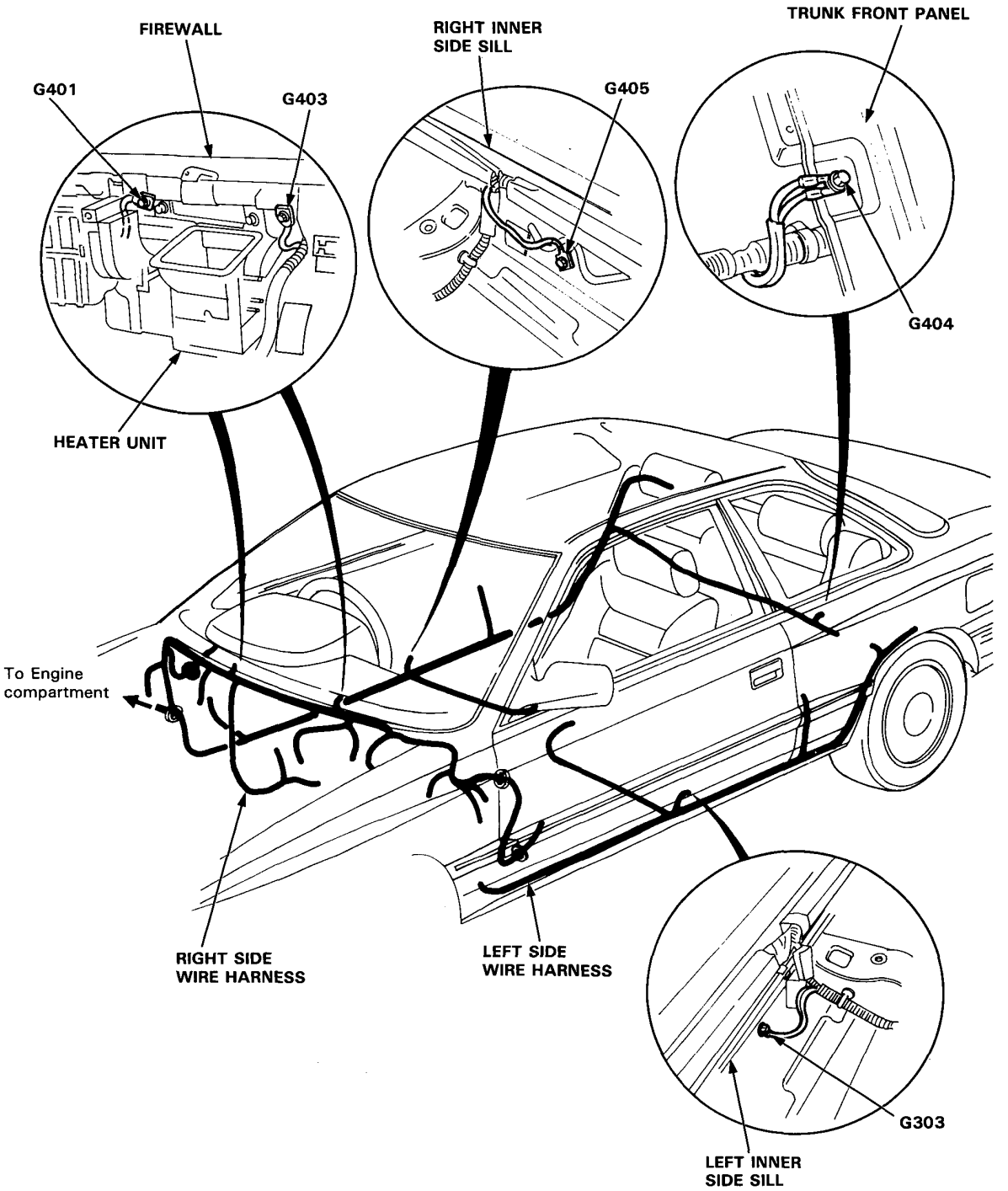
FIREWALL
G401
G403
HEATER UNIT
RIGHT INNER
SIDE SILL
G405
TRUNK FRONT PANEL
G404
To Engine
compartment
RIGHT SIDE
WIRE HARNESS
LEFT SIDE
WIRE HARNESS
G303
LEFT INNER
SIDE SILL

Wire Harness and Ground Locations

Trunk, Door and Roof (LHD)

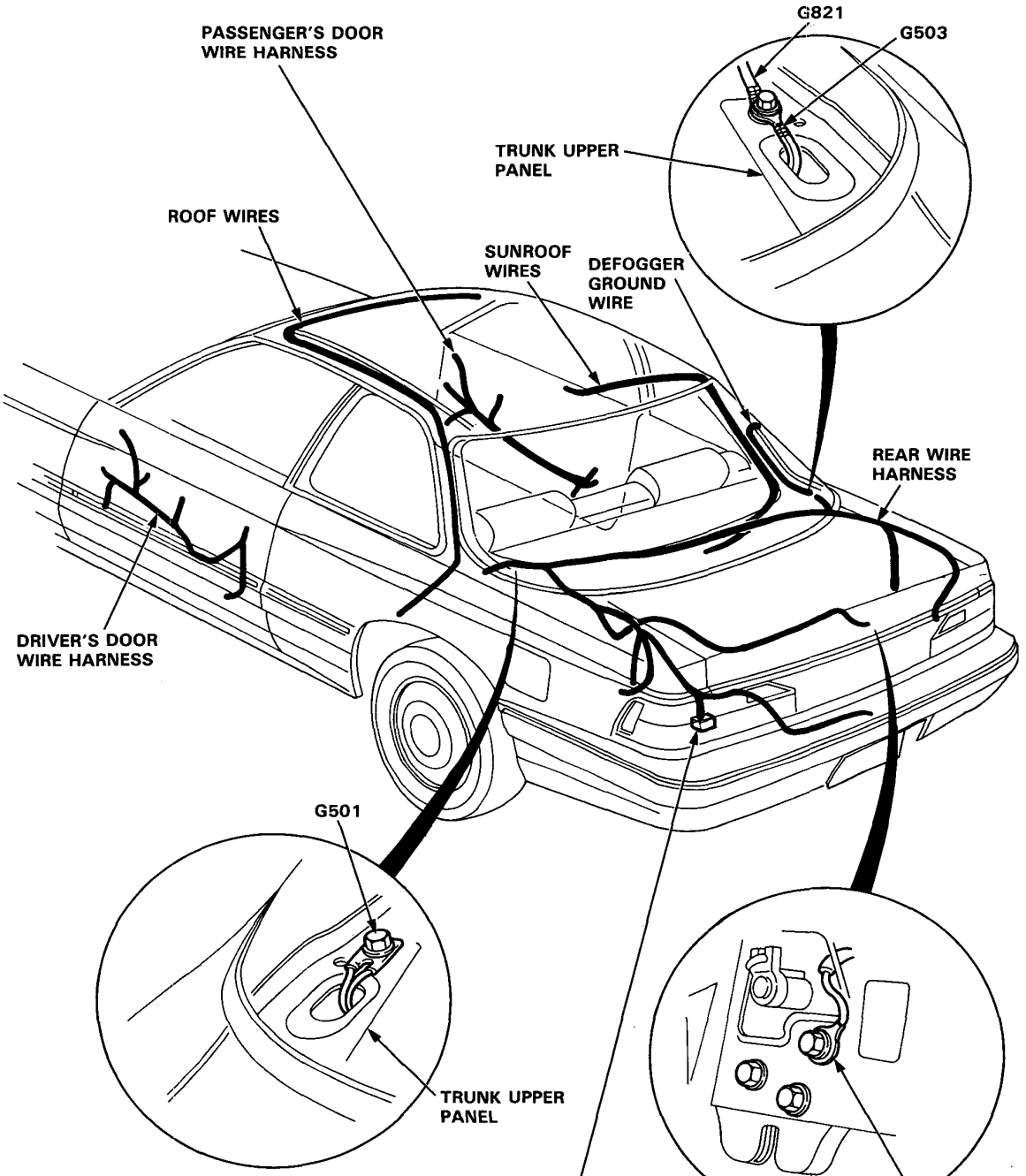

(EC only)

NOTE: When connecting the 6-P connector to the trailer connector, make sure that the turn signal circuits of the trailer have relay circuits.

Connector Capacitance

Turn signal relays	: 0.1 A max.
Brake lights	: 21 W x 2 max.
Taillight	: 21 W x 2 max.

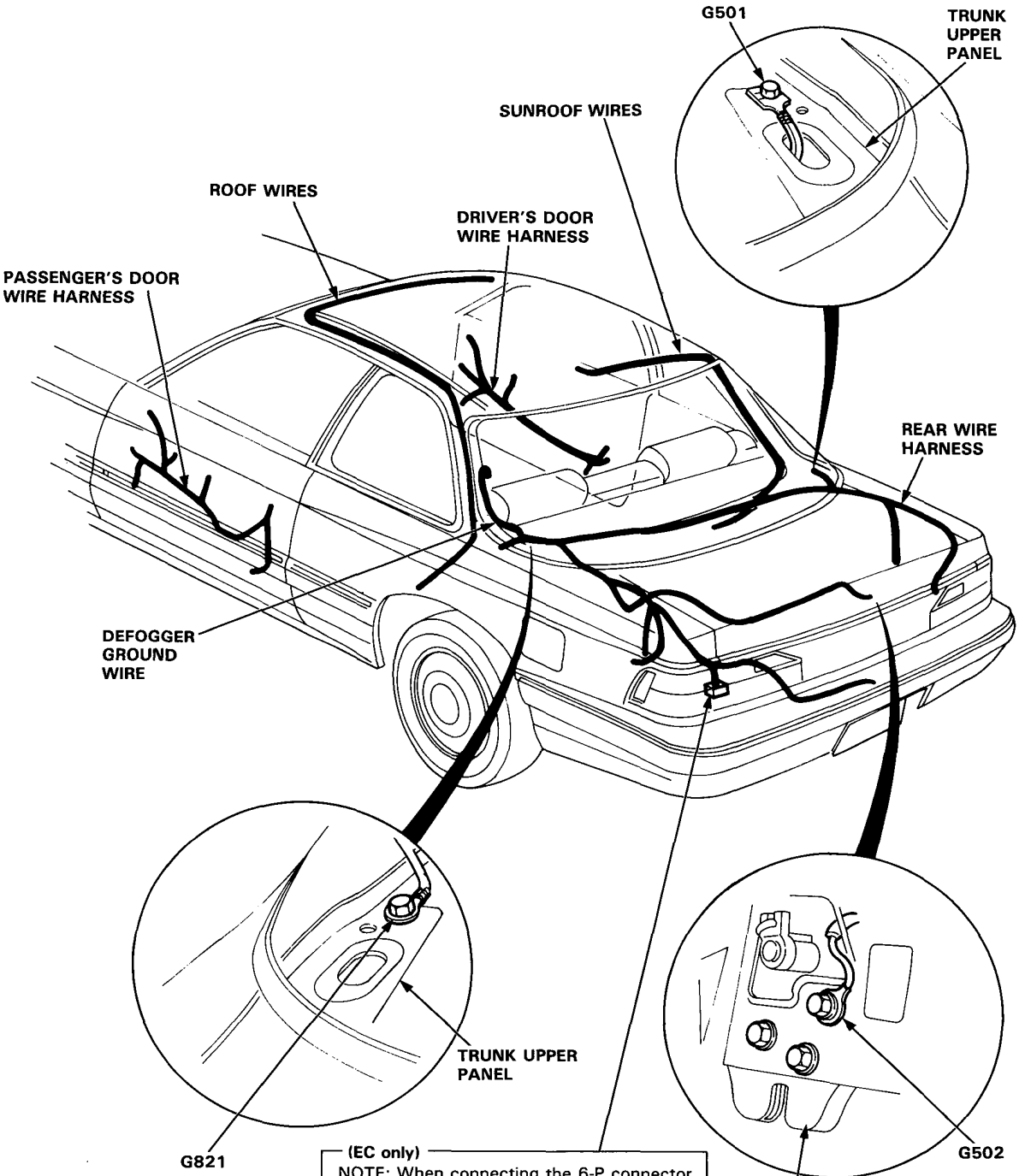

(EC only)
NOTE: When connecting the 6-P connector to the trailer connector, make sure that the trun signal circuits of the trailer have relay circuits.

Connector Capacitance

Turn signal relays	**: 0.1 A max.**
Brake lights	**: 21 W x 2 max.**
Taillight	**: 21 W x 2 max.**

Wire Harness and Ground Locations

Dashboard (LHD)

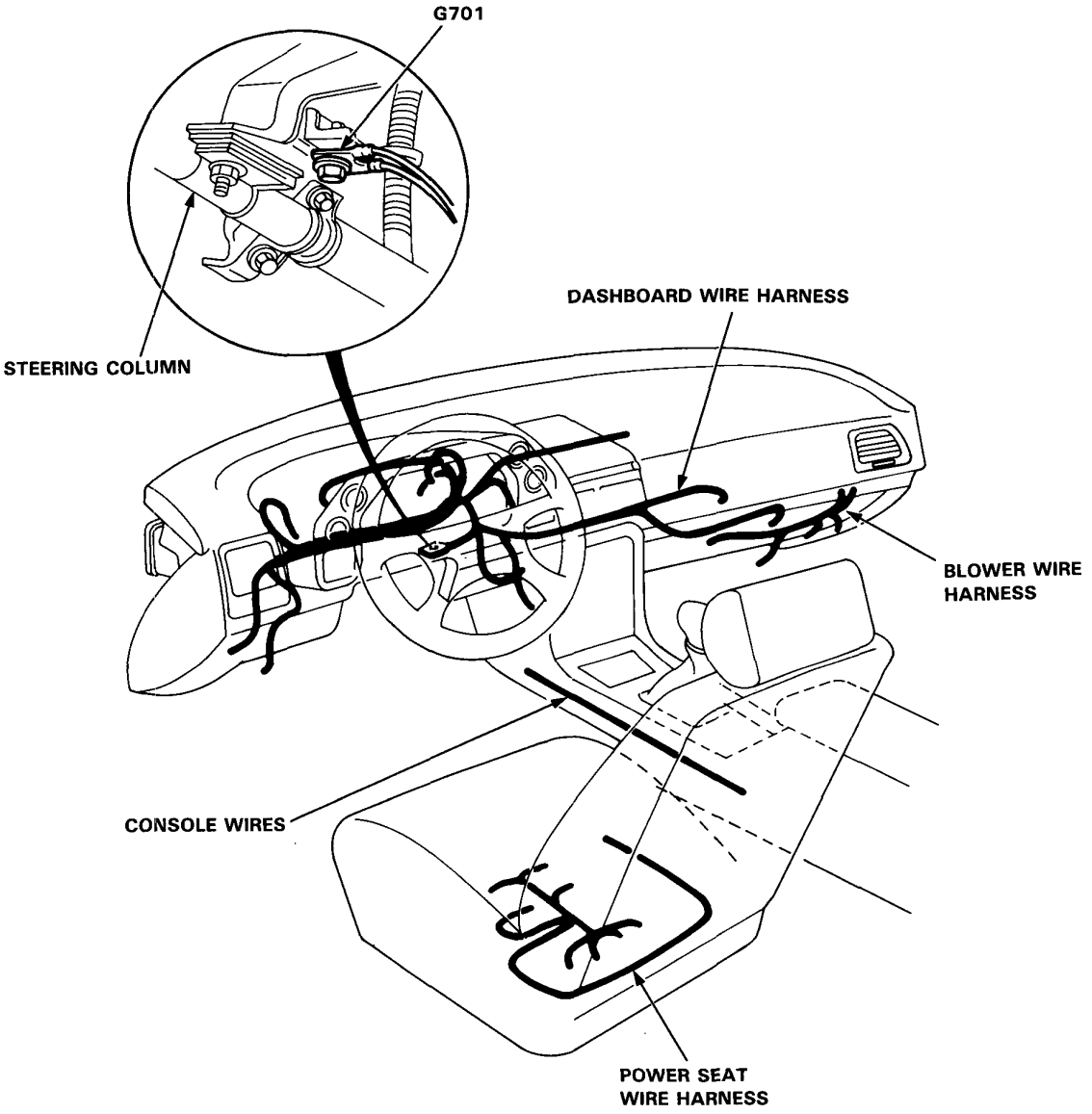

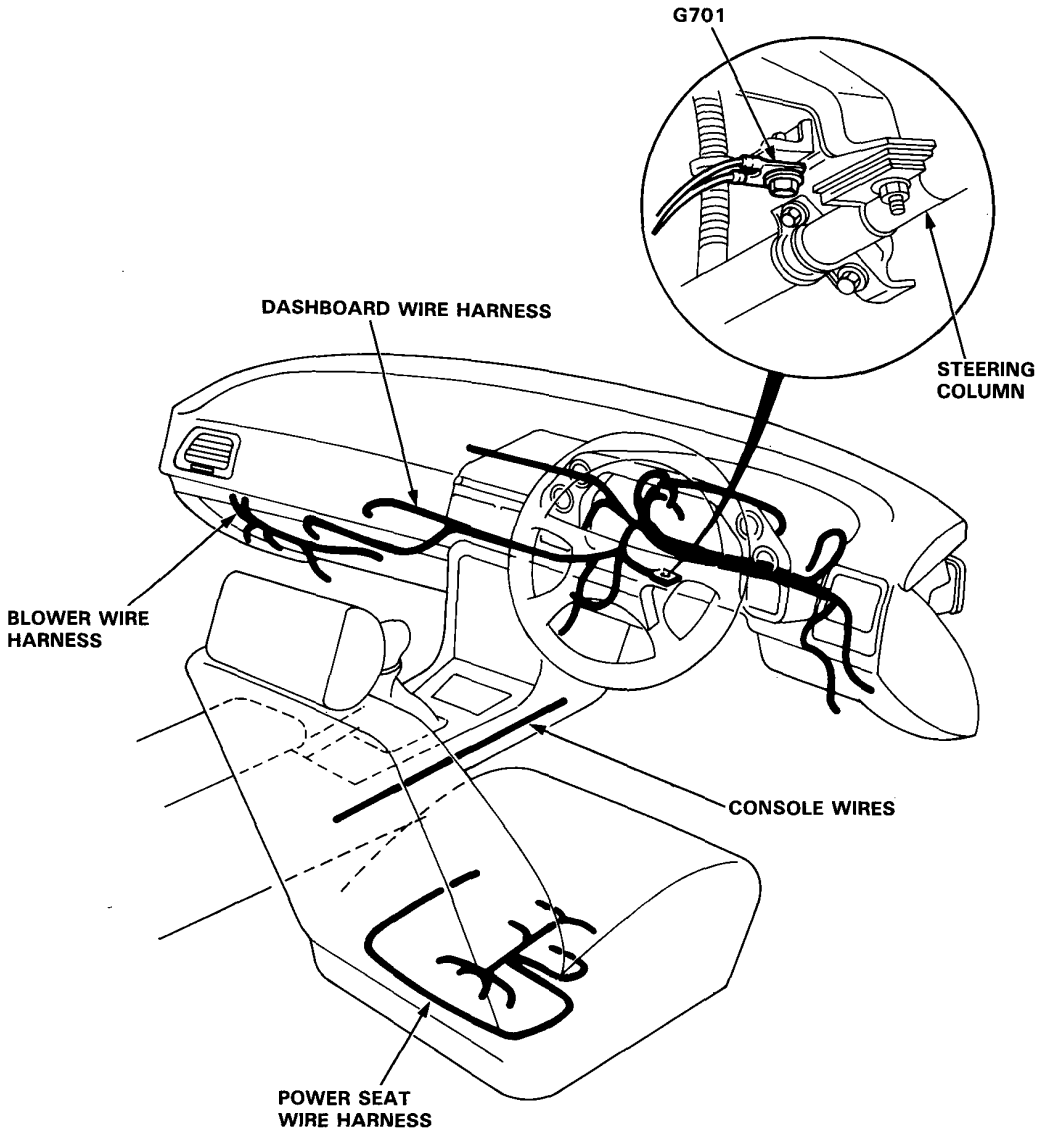
G701
DASHBOARD WIRE HARNESS
STEERING COLUMN
BLOWER WIRE HARNESS
CONSOLE WIRES
POWER SEAT WIRE HARNESS

Fuse/Relay Box (LHD)

Fuse Box (Located under dash, left side):

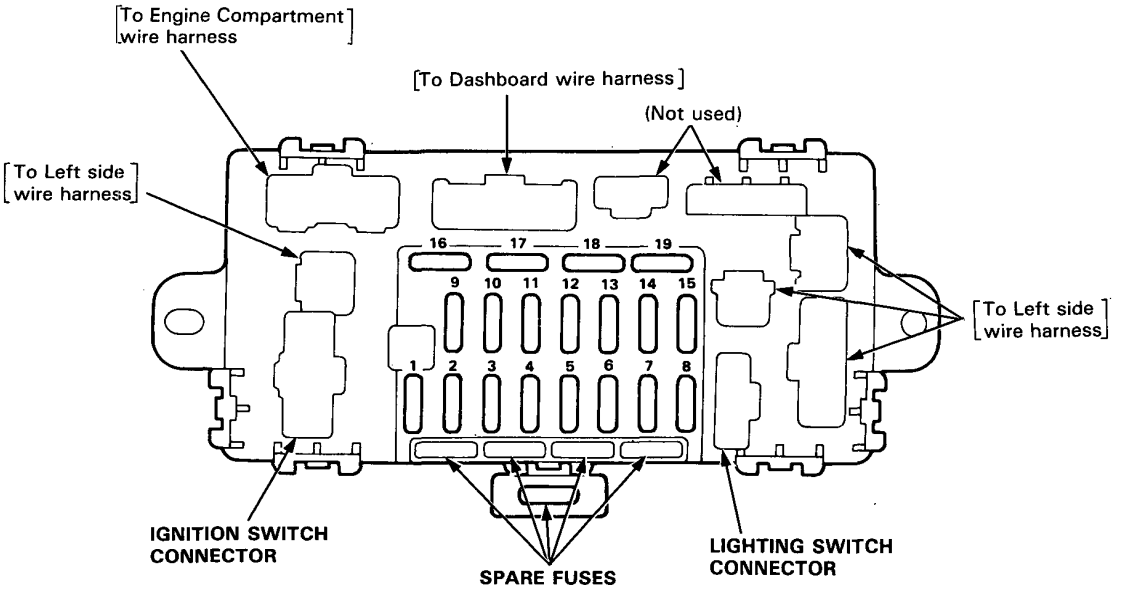

Relay Box (Located in engine compartment, left side):

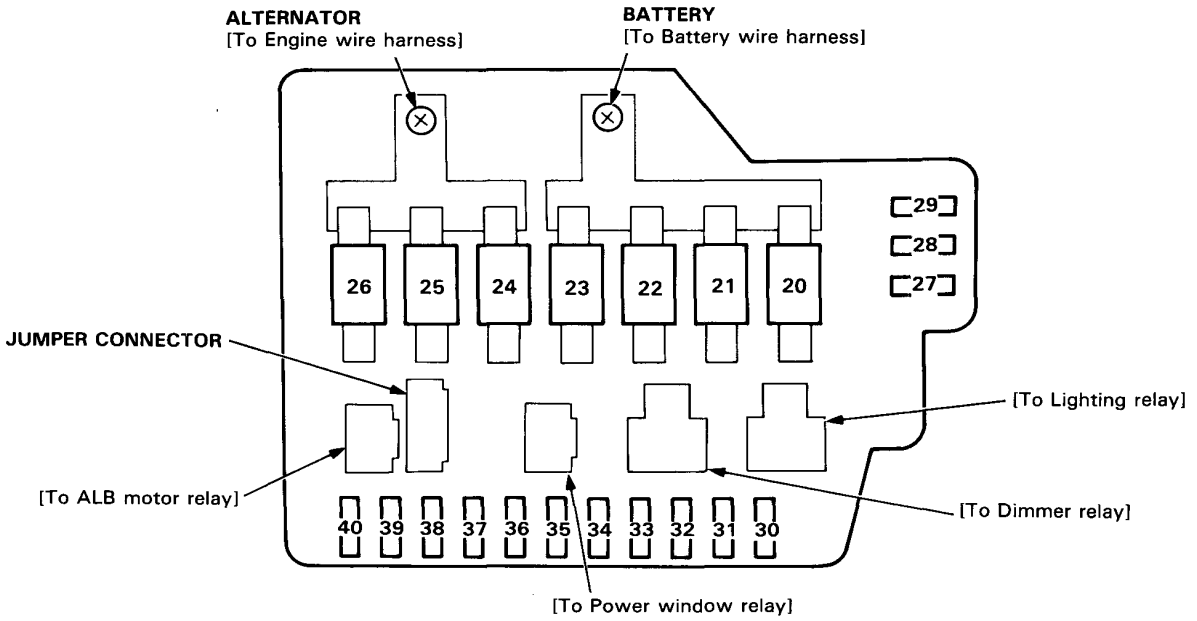

(RHD)

Fuse Box (Located under dash, right side):

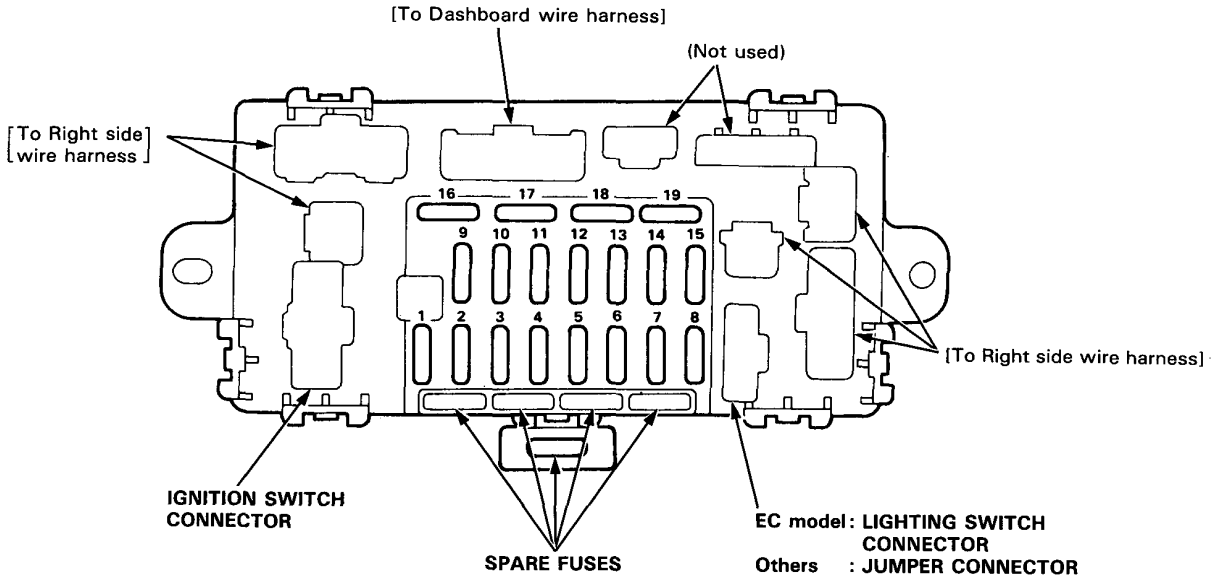

Relay Box (Located in engine compartment, left side):

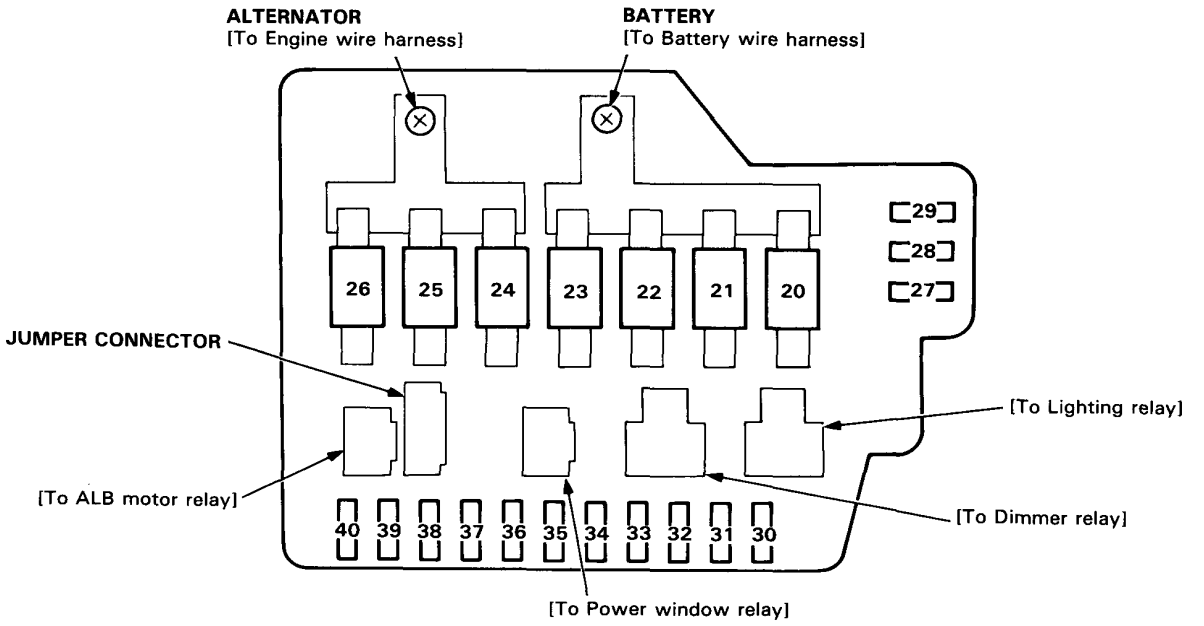

Power Distribution

Circuit Identification

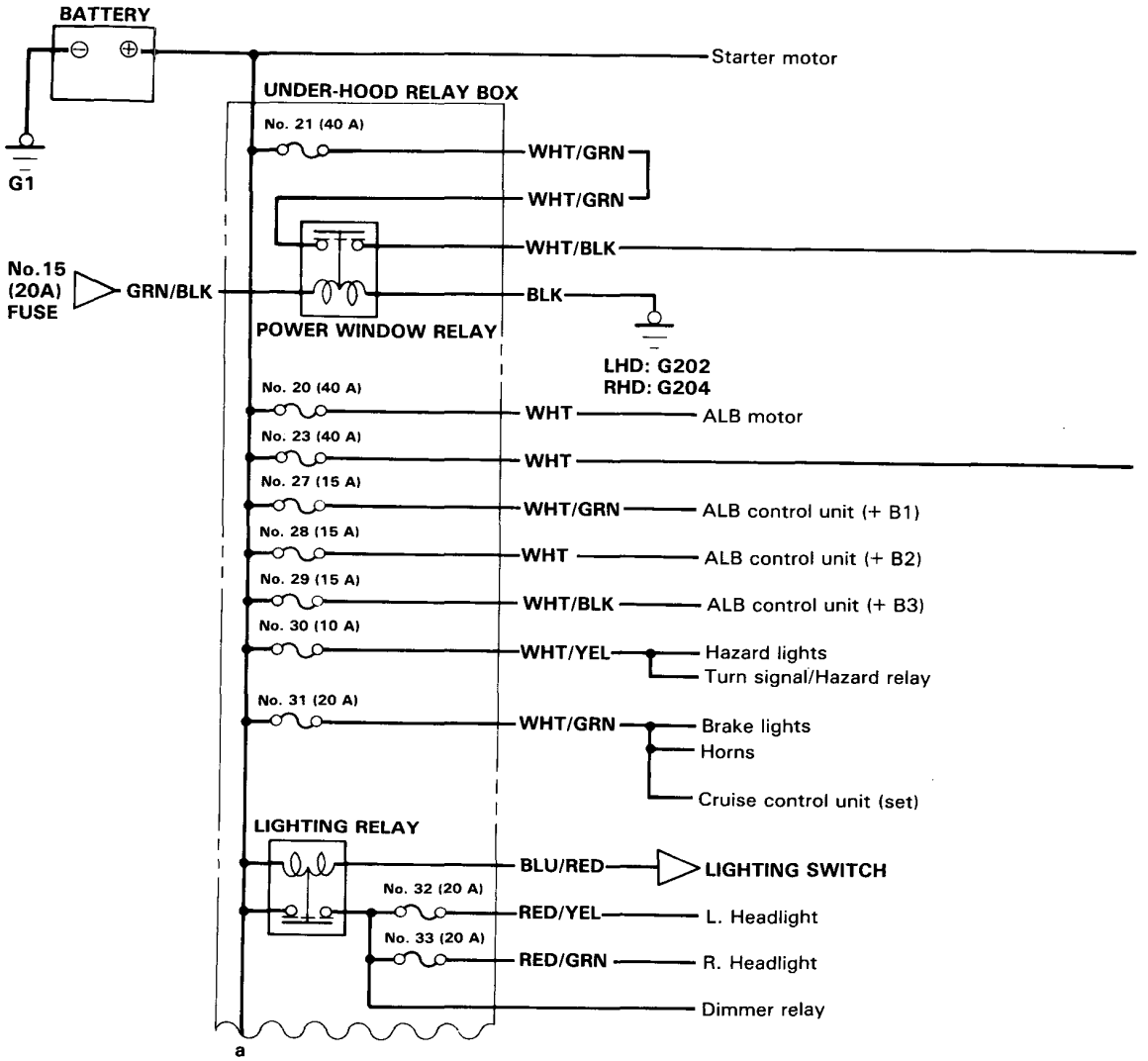

(To page 16-20)

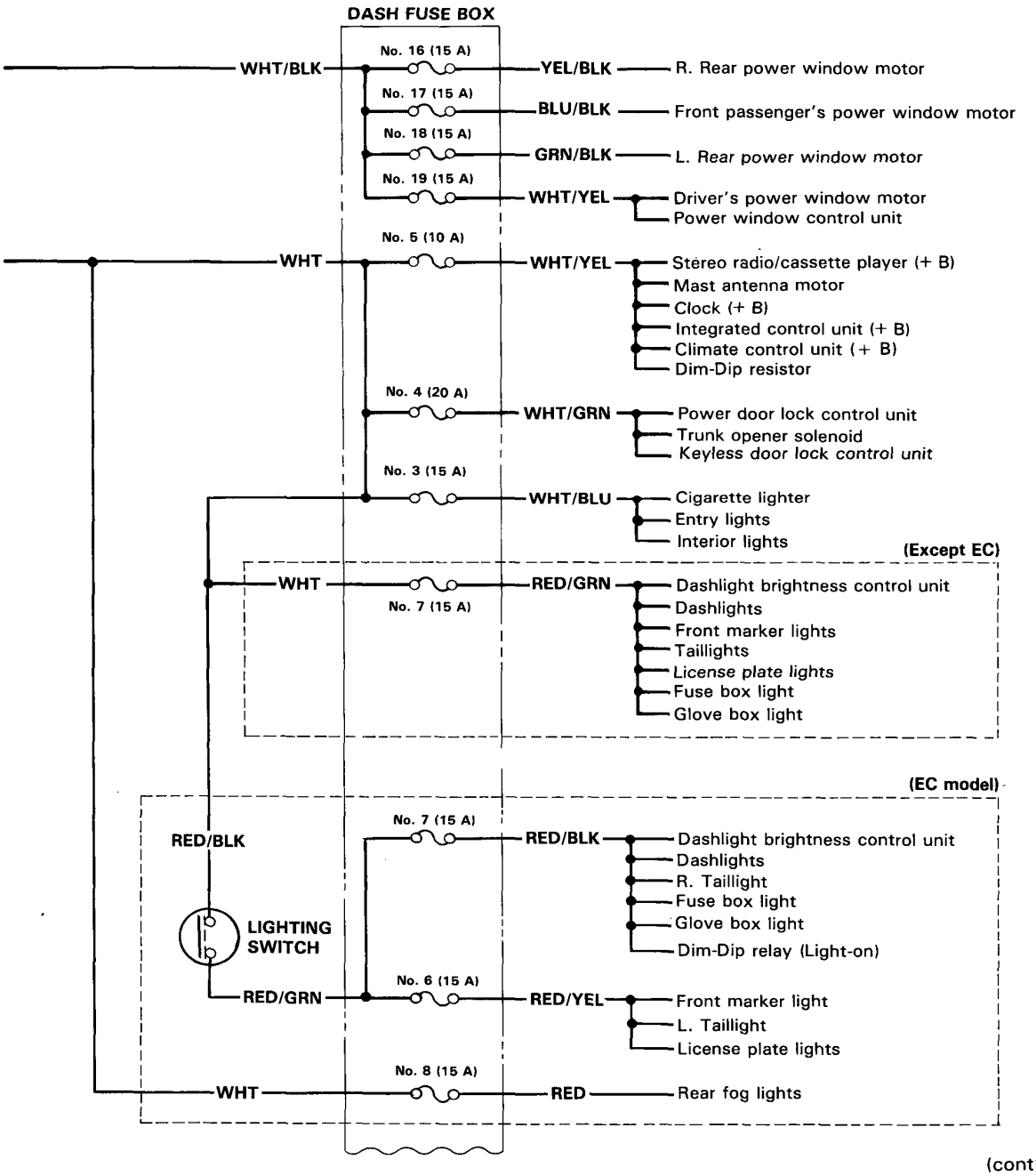
DASH FUSE BOX
No. 16 (15 A)
WHT/BLK
YEL/BLK
R. Rear power window motor
No. 17 (15 A)
BLU/BLK
Front passenger's power window motor
No. 18 (15 A)
GRN/BLK
L. Rear power window motor
No. 19 (15 A)
WHT/YEL
Driver's power window motor
Power window control unit
No. 5 (10 A)
WHT
WHT/YEL
Stereo radio/cassette player (+ B)
Mast antenna motor
Clock (+ B)
Integrated control unit (+ B)
Climate control unit (+ B)
Dim-Dip resistor
No. 4 (20 A)
WHT/GRN
Power door lock control unit
Trunk opener solenoid
Keyless door lock control unit
No. 3 (15 A)
WHT/BLU
Cigarette lighter
Entry lights
Interior lights
(Except EC)
WHT
No. 7 (15 A)
RED/GRN
Dashlight brightness control unit
Dashlights
Front marker lights
Taillights
License plate lights
Fuse box light
Glove box light
(EC model)
RED/BLK
No. 7 (15 A)
RED/BLK
Dashlight brightness control unit
Dashlights
R. Taillight
Fuse box light
Glove box light
Dim-Dip relay (Light-on)
LIGHTING SWITCH
RED/GRN
No. 6 (15 A)
RED/YEL
Front marker light
L. Taillight
License plate lights
No. 8 (15 A)
WHT
RED
Rear fog lights

(cont'd)

Power Distribution

Circuit Identification (cont'd)

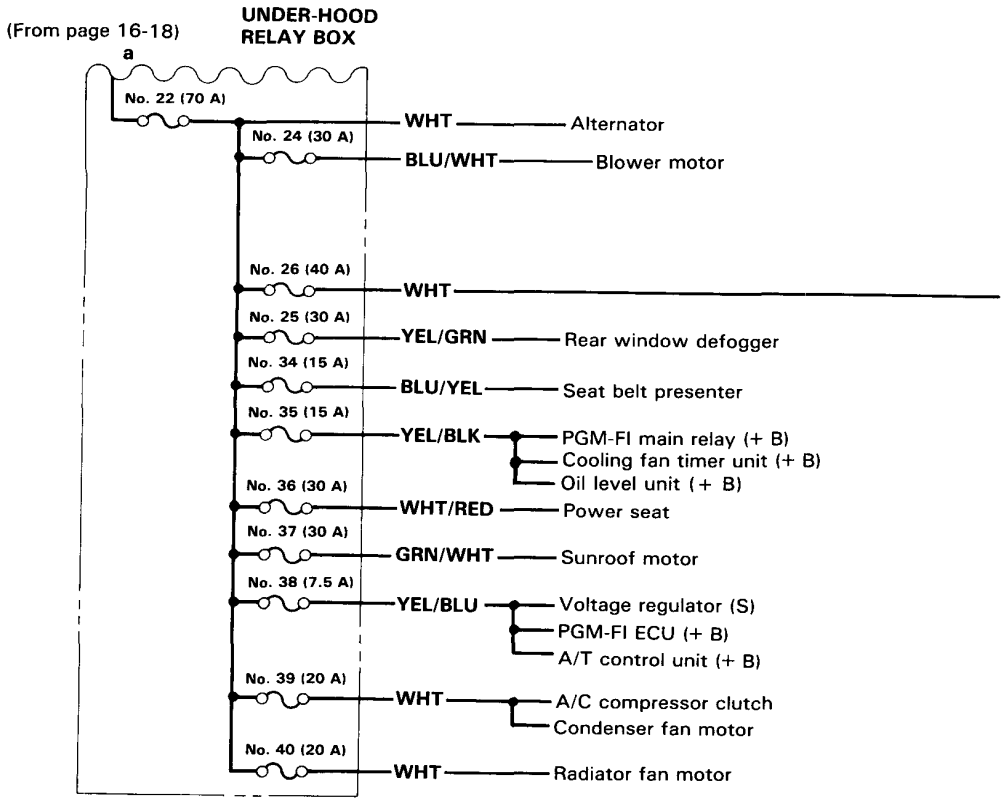

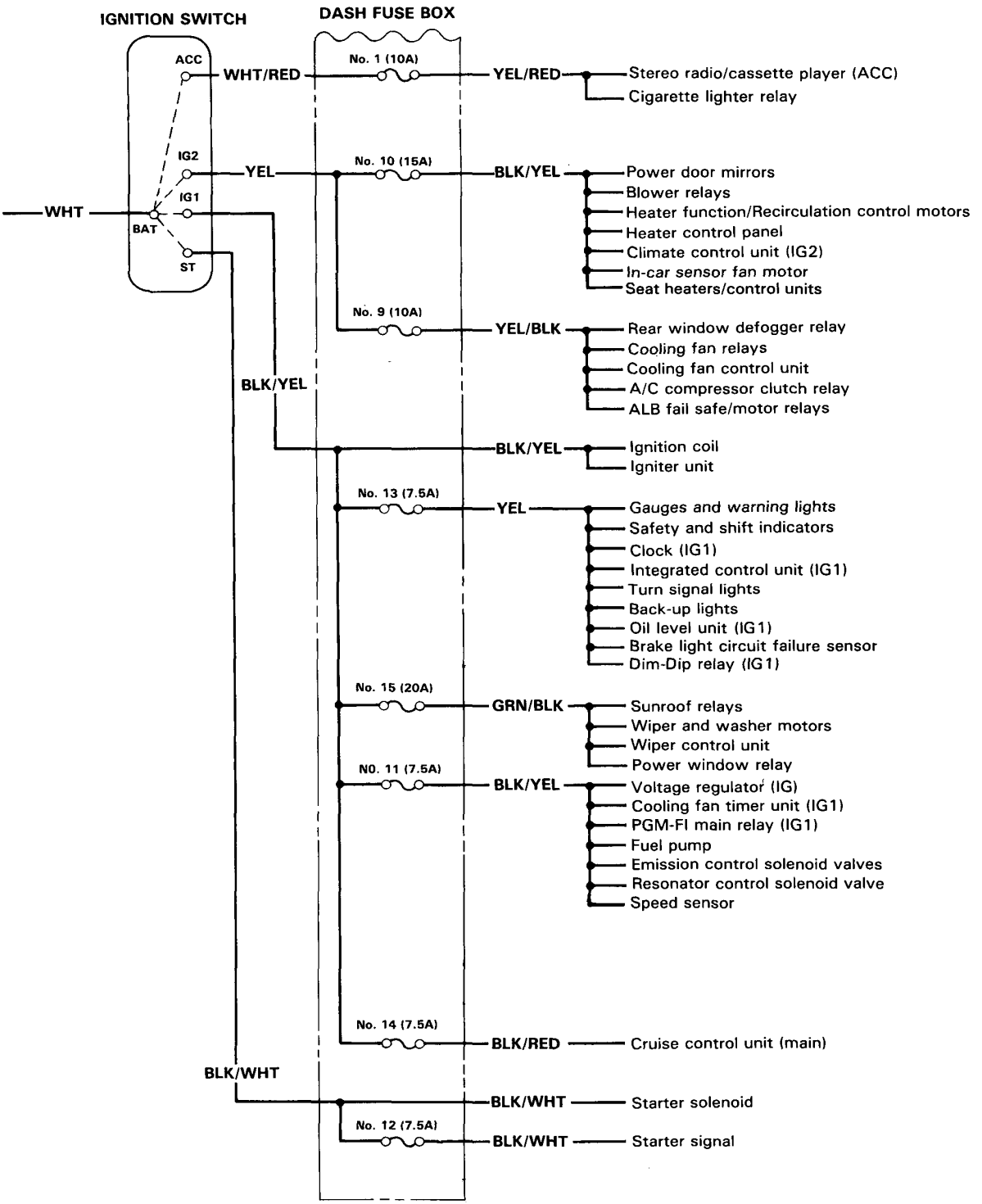
IGNITION SWITCH
DASH FUSE BOX
ACC
IG2
IG1
BAT
ST
WHT
WHT/RED
YEL
BLK/YEL
BLK/WHT
No. 1 (10A)
YEL/RED
Stereo radio/cassette player (ACC)
Cigarette lighter relay
No. 10 (15A)
BLK/YEL
Power door mirrors
Blower relays
Heater function/Recirculation control motors
Heater control panel
Climate control unit (IG2)
In-car sensor fan motor
Seat heaters/control units
No. 9 (10A)
YEL/BLK
Rear window defogger relay
Cooling fan relays
Cooling fan control unit
A/C compressor clutch relay
ALB fail safe/motor relays
BLK/YEL
Ignition coil
Igniter unit
No. 13 (7.5A)
YEL
Gauges and warning lights
Safety and shift indicators
Clock (IG1)
Integrated control unit (IG1)
Turn signal lights
Back-up lights
Oil level unit (IG1)
Brake light circuit failure sensor
Dim-Dip relay (IG1)
No. 15 (20A)
GRN/BLK
Sunroof relays
Wiper and washer motors
Wiper control unit
Power window relay
N0. 11 (7.5A)
BLK/YEL
Voltage regulator (IG)
Cooling fan timer unit (IG1)
PGM-FI main relay (IG1)
Fuel pump
Emission control solenoid valves
Resonator control solenoid valve
Speed sensor
No. 14 (7.5A)
BLK/RED
Cruise control unit (main)
BLK/WHT
Starter solenoid
No. 12 (7.5A)
BLK/WHT
Starter signal

Ground Distribution

Circuit Identification (LHD)

NOTE: See page 16-9 for illustrated ground locations.

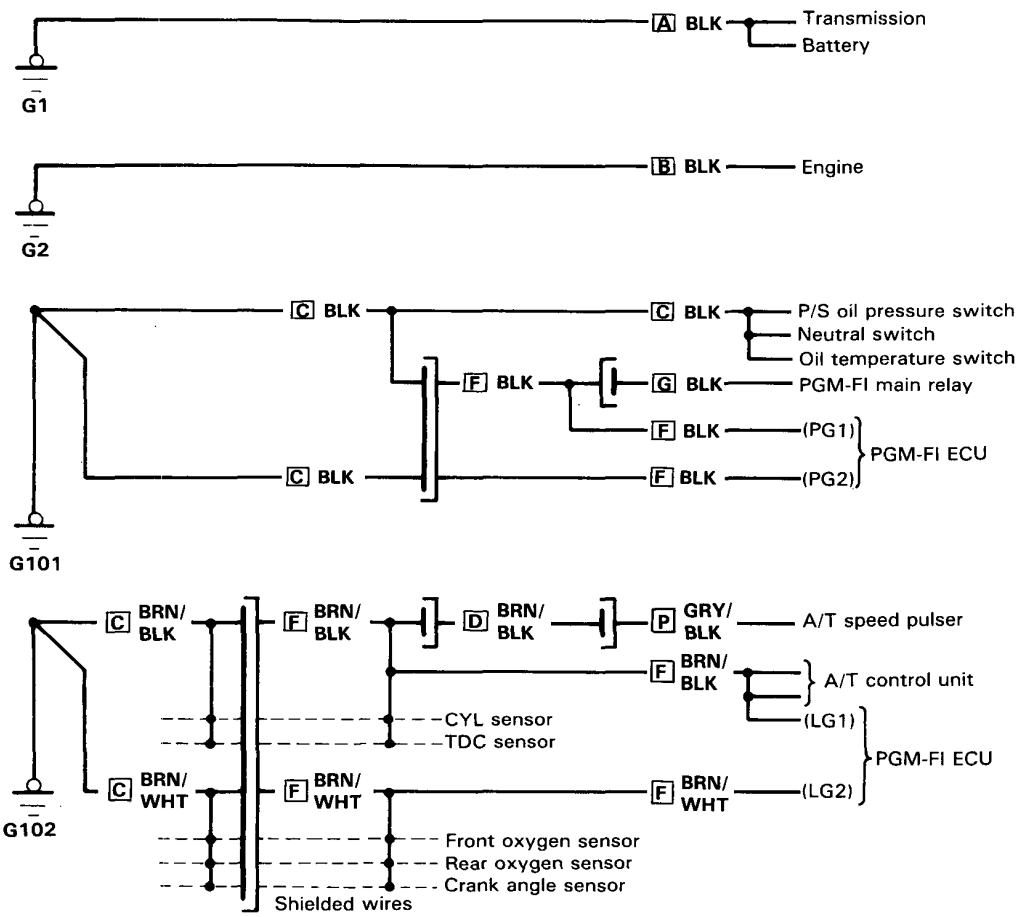

A: Battery ground wire
B: Engine ground wire
C: Engine wire harness
D: Engine compartment wire harness
F: Right side wire harness
G: Left side wire harness
P: Battery wire harness

(RHD)

NOTE: See page 16-9 for illustrated ground locations.

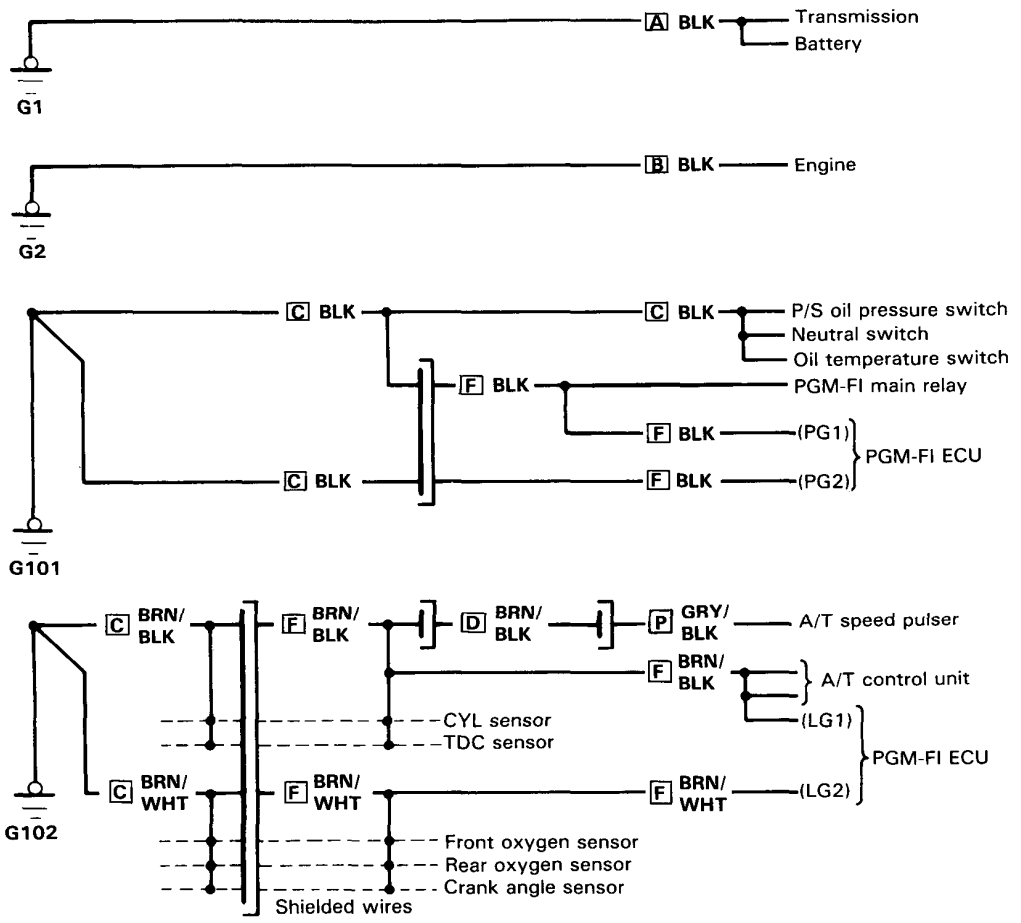

A: Battery ground wire
B: Engine ground wire
C: Engine wire harness
D: Engine compartment wire harness
F: Right side wire harness
P: Battery wire harness

(cont'd)

Ground Distribution

Circuit Identification (LHD)

NOTE: See page 16-9 for illustrated ground locations.

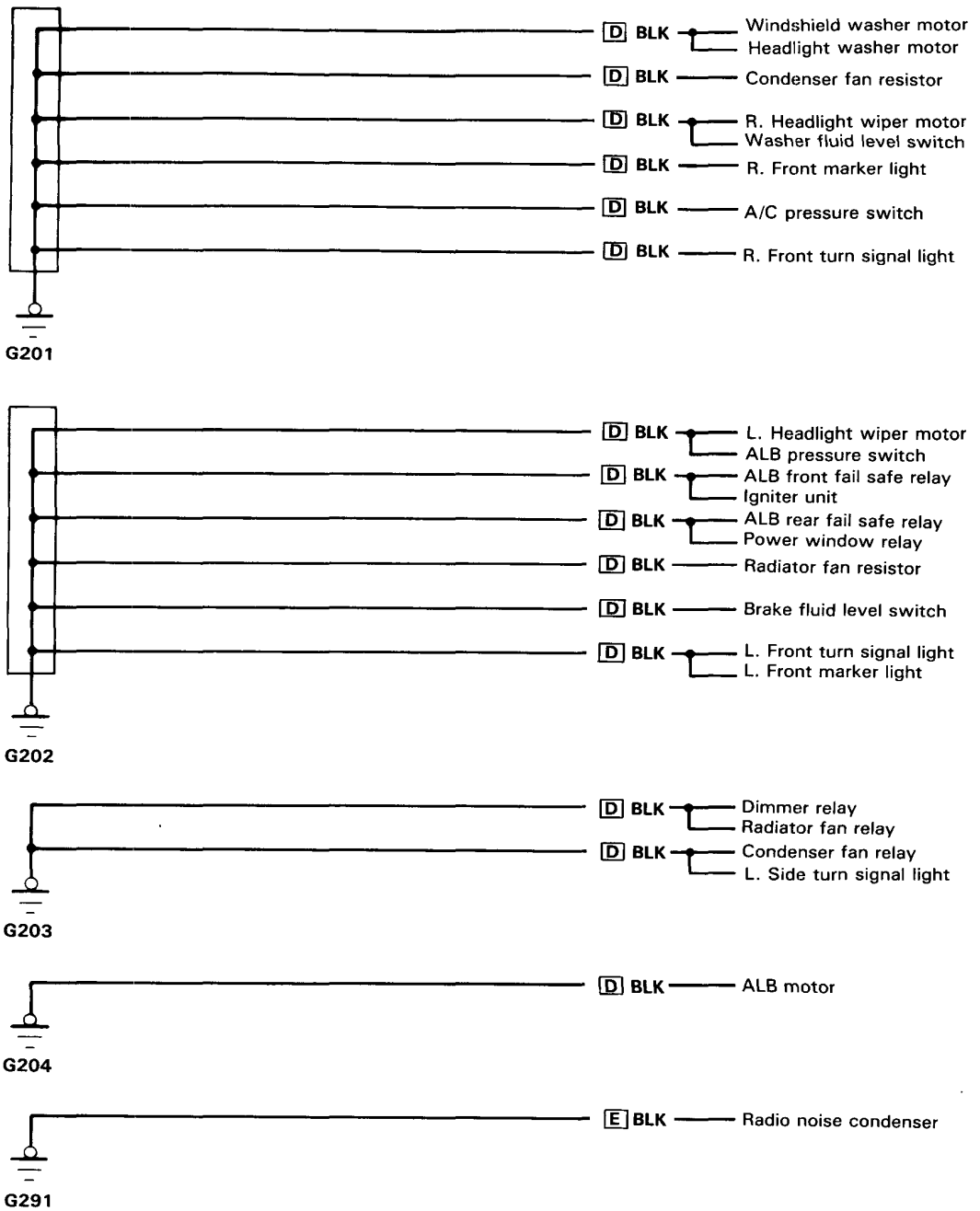

D: Engine compartment wire harness
E: Radio condenser ground wire

(RHD)

NOTE: See page 16-9 for illustrated ground locations.

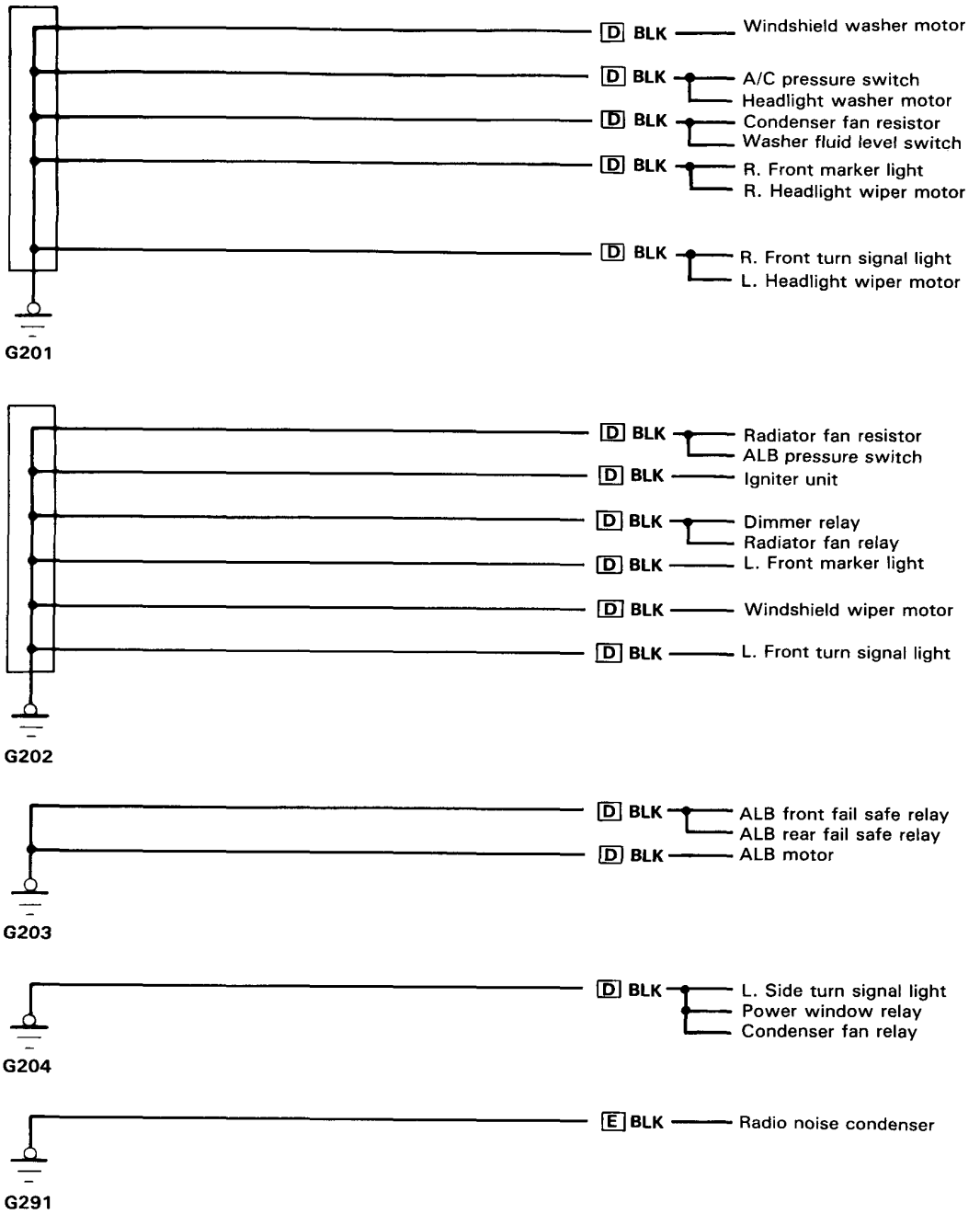

D: Engine compartment wire harness
E: Radio condenser ground wire

(cont'd)

Ground Distribution

Circuit Identification (LHD)

NOTE: See pages 16-9 and 10 for illustrated ground locations.

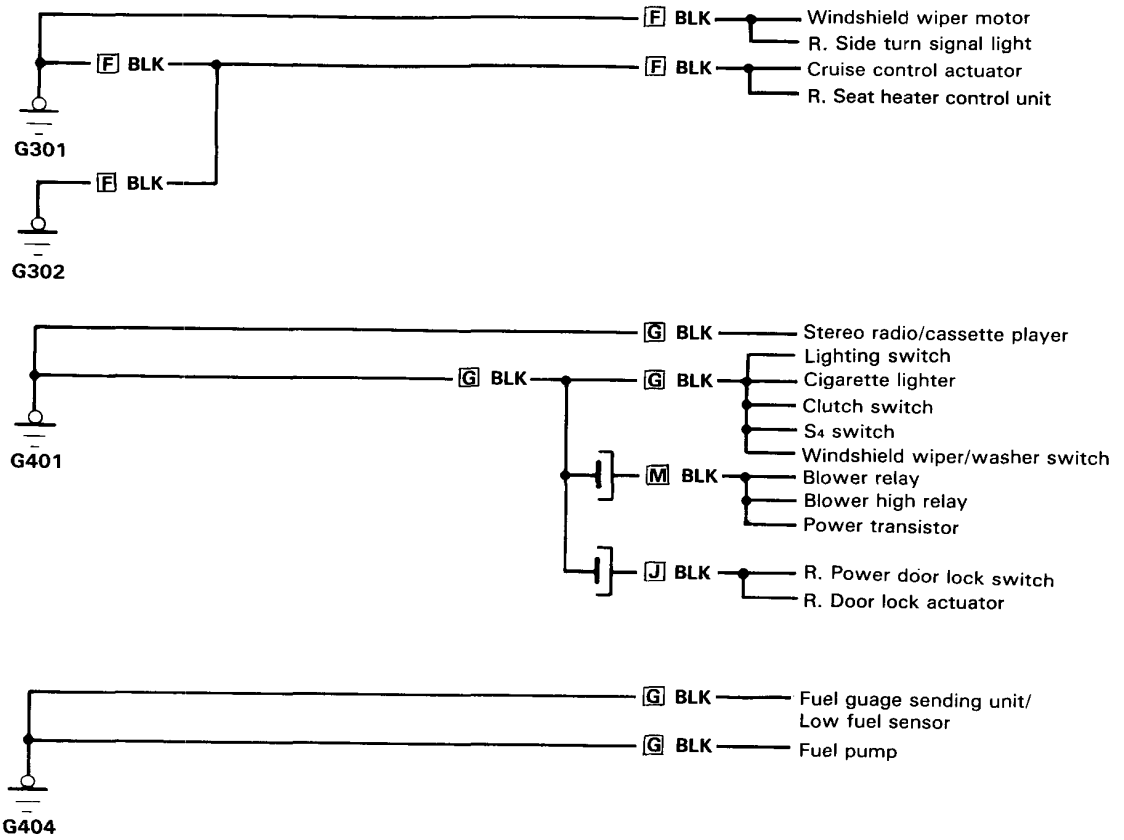

F: Right side wire harness
G: Left side wire harness
J: Passenger's door wire harness
M: Blower wire harness

(RHD)

NOTE: See pages 16-9, 11 and 13 for illustrated ground locations.

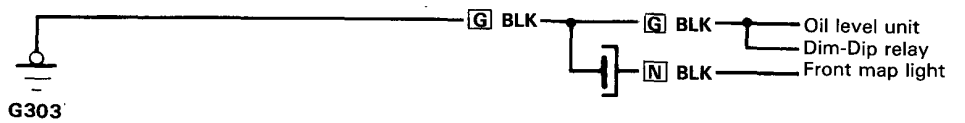

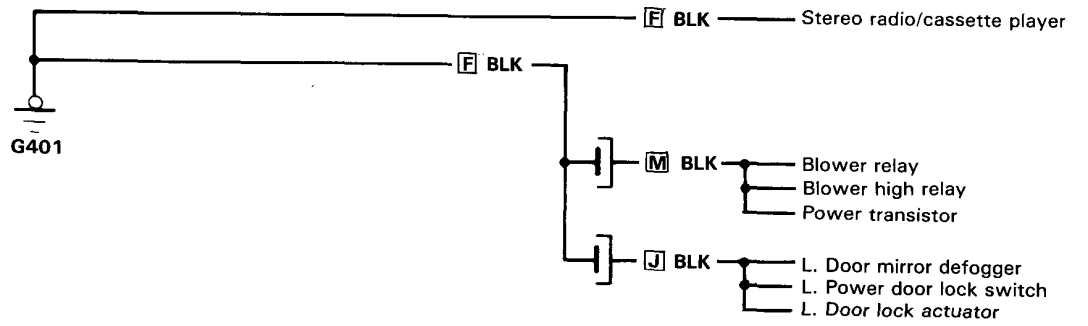

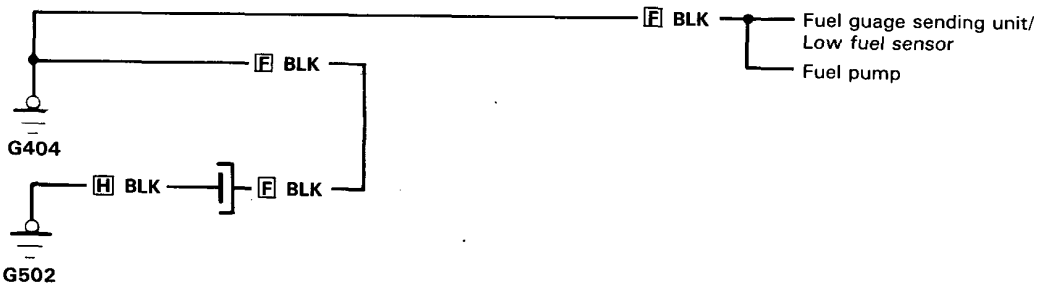

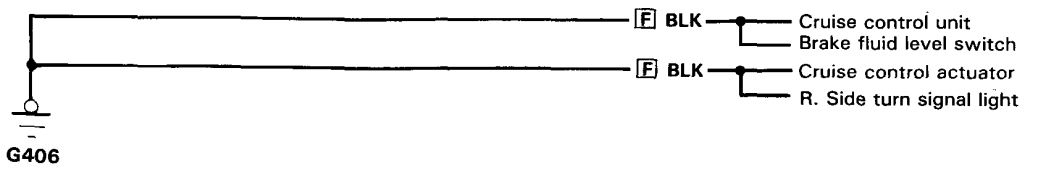

F: Right side wire harness
G: Left side wire harness
H: Rear wire harness
J: Passenger's door wire harness
M: Blower wire harness
N: Roof wires

(cont'd)

Ground Distribution

Circuit Identification (LHD)

NOTE: See pages 16-10 and 12 for illustrated ground locations.

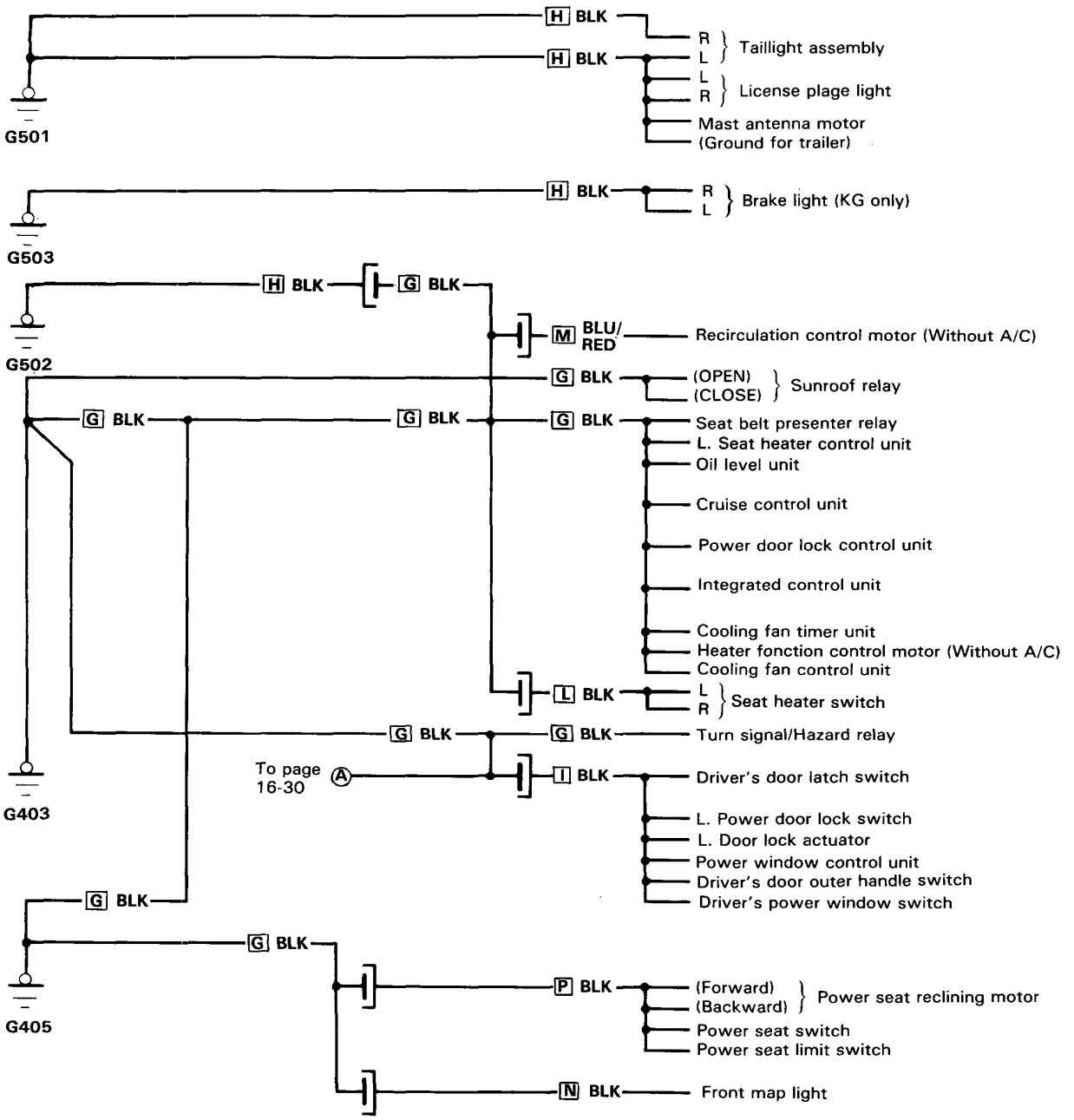

G: Left side wire harness
H: Rear wire harness
I: Driver's door wire harness
L: Console wires
M: Blower wire harness
N: Roof wires
P: Power seat wire harness

(RHD)

NOTE: See pages 16-11 and 13 for illustrated ground locations.

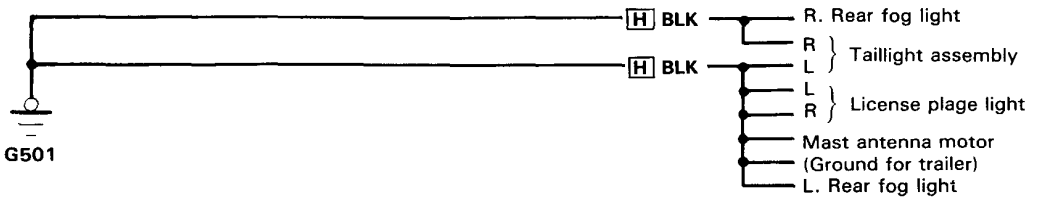

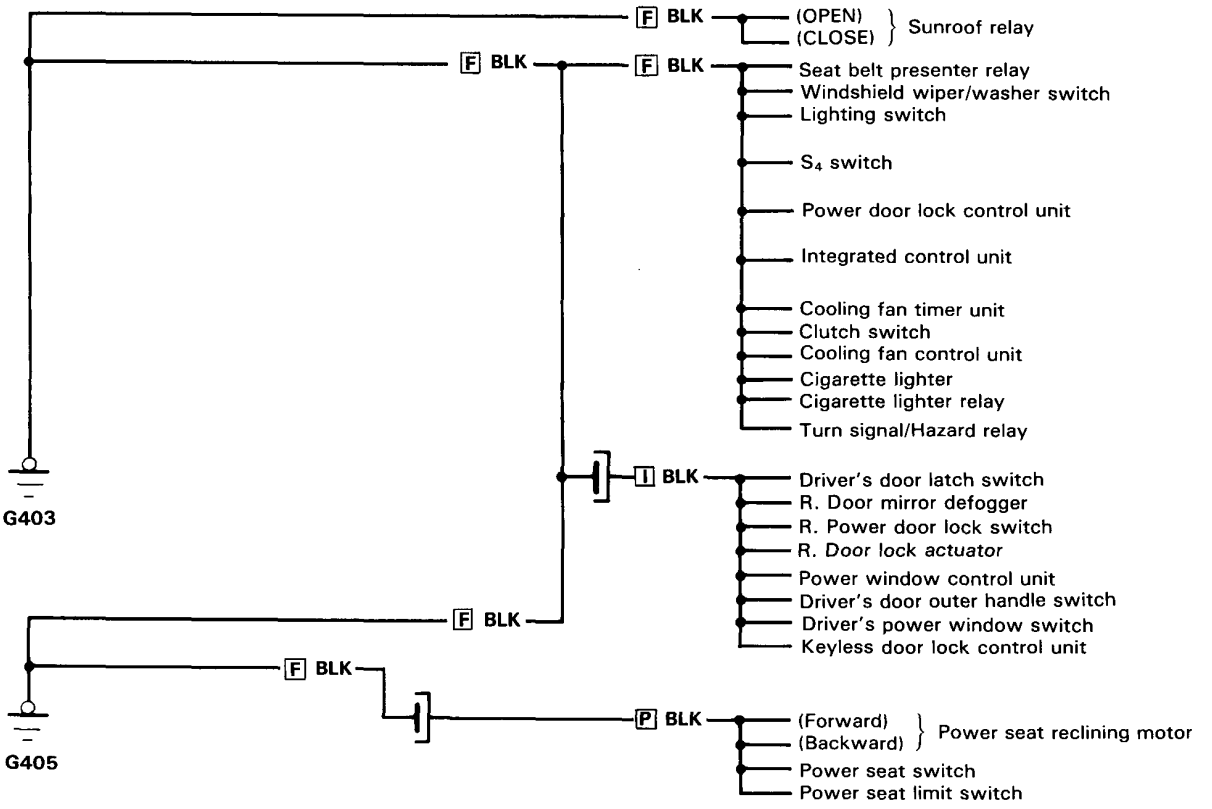

F: Right side wire harness
H: Rear wire harness
I: Driver's door wire harness
P: Power seat wire harness

(cont'd)

Ground Distribution

Circuit Identification (LHD)

NOTE: See pages 16-12 and 14 for illustrated ground locations.

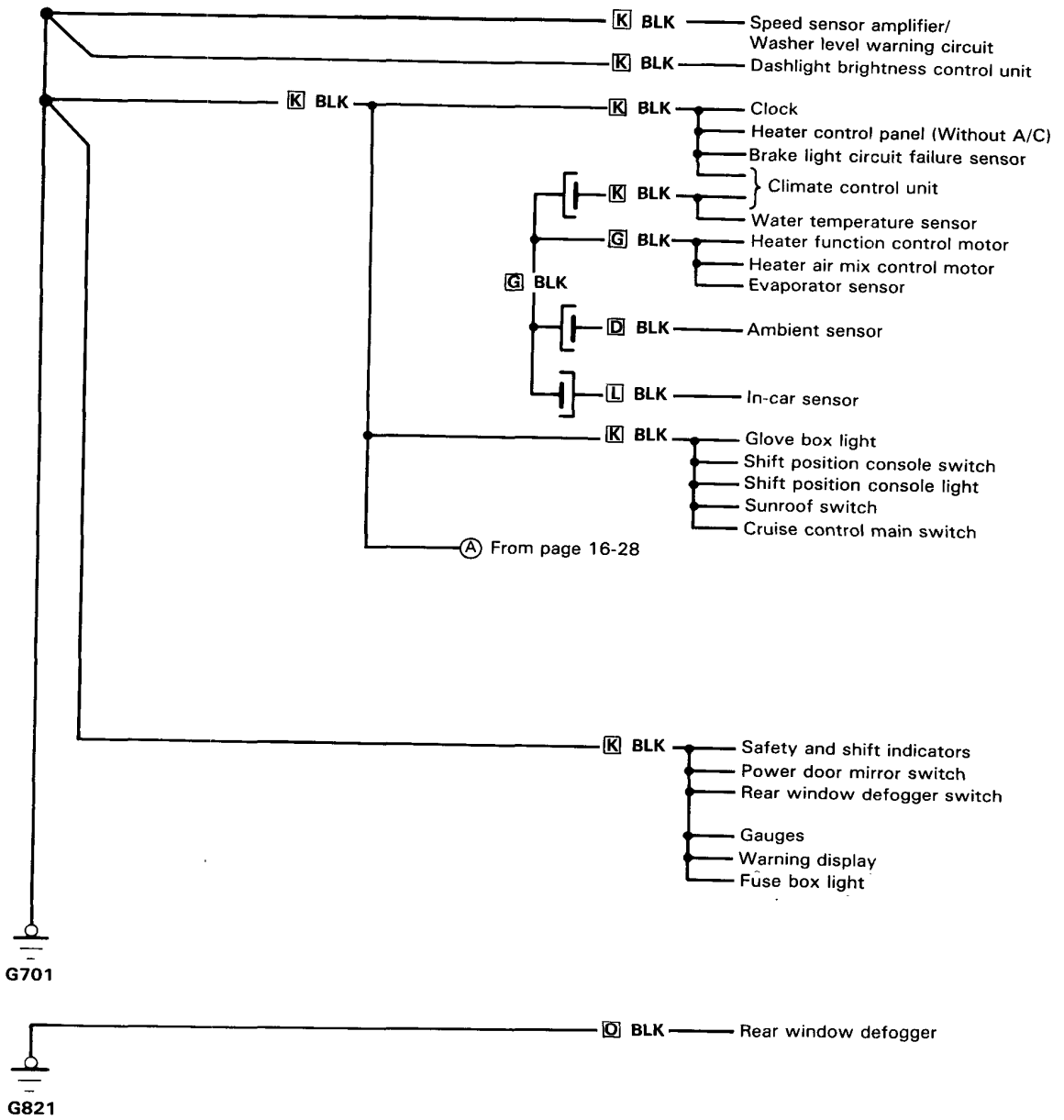

D: Engine compartment wire harness
G: Left side wire harness
K: Dashboard wire harness
L: Console wires
O: Defogger ground wire

(RHD)

NOTE: See pages 16-13 and 15 for illustrated ground locations.

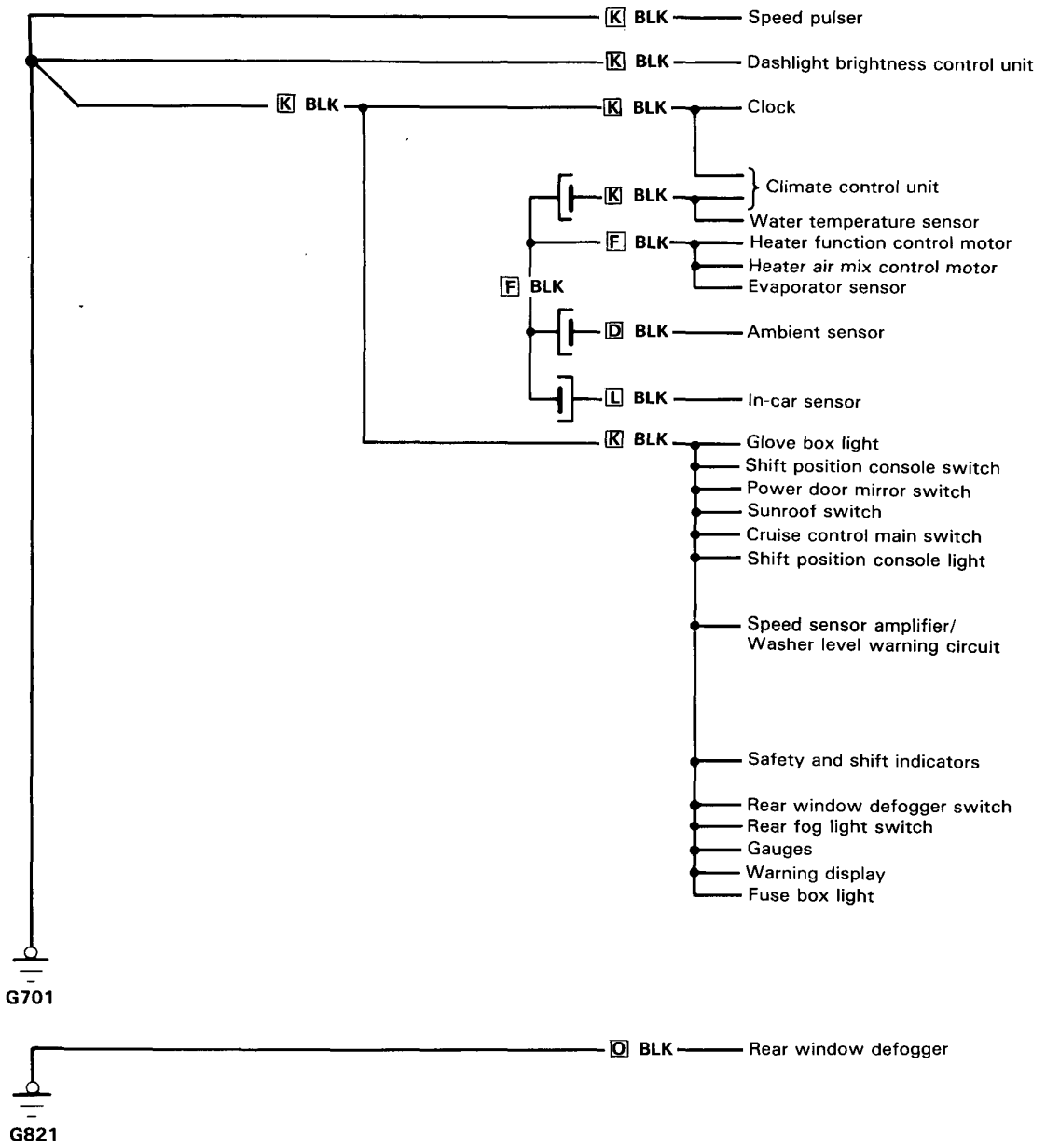

D: Engine compartment wire harness
F: Right side wire harness
K: Dashboard wire harness
L: Console wires
O: Defogger ground wire

Test

NOTE: To get accurate results, the temperature of the electrolyte must be between 15 and 38°C (59 and 100°F) before testing.

Test Equipment Required:

- Battery tester with:
  Voltmeter with 0–18 V scale, Ammeter with 0–100 A and 0–500 A scales, and a carbon pile with 0–300 W.
- 12 V Battery Charger:
  Fast charge capability of 50 A and slow charge capability of 5 A.

Test Procedure:

WARNING Keep sparks, flames and cigarettes away while charging battery.

CAUTION: Battery electrolyte is a sulfuric acid solution.

- If it spills on painted surfaces, clothing, or skin, rinse it off with water immediately to minimize the damage.
- Always wear safety goggles or a face shield when servicing a battery.

1. Check for damage: If the case is cracked or the posts are loose, replace the battery.
2. Check indicator (for basic charge condition): Blue or Green is OK. If the indicator is red, peel the tape off, remove the caps, and add distilled water; then reinstall the caps and tape. If the indicator is clear, go to step 3.

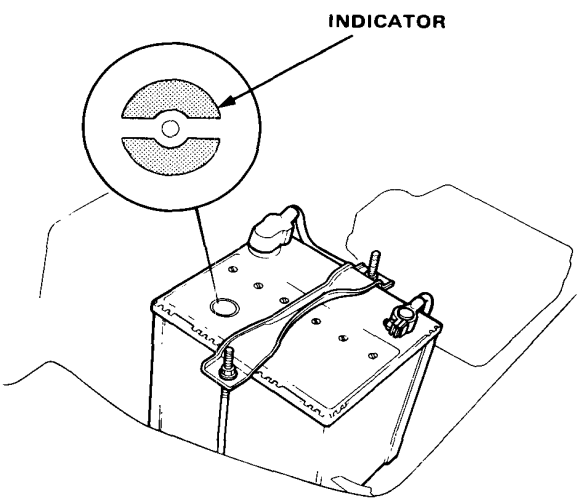

3. Test battery load capacity by connecting a battery tester, and applying a load of 3 times the battery ampere hour rating.
   When the load has been applied for exactly 15 seconds, the battery voltage reading should stay above 9.6 V.

   - If the reading stays above 9.6 V, the battery is OK; clean its terminals and case, and reinstall it.
   - If the reading is between 6.5 and 9.6 V, fast charge the battery by connecting a battery charger, for 3 minutes at an initial rate of 40 amps.

   CAUTION: Amperage will drop as voltage increases; do not increase the amperage to compensate or you may damage the battery.

   Watch the battery voltage during the entire 3 minutes; the highest reading should stay below 15.5 V.

   – If the reading stays below 15.5 V, the battery is OK; clean its terminals and case, and reinstall it.

   – If the reading exceeds 15.5 V any time during the 3 minutes of fast charge, the battery is no good; replace it.

   - If the reading drops below 6.5 V, slow charge the battery by connecting a battery and charge at 5 amps for no more than 24 hours, (or until the indicator shows full charge, or the specific gravity of the electrolyte is at least 1.250).
     Then test load capacity again.

     – If the voltage stays above 9.6 V, the battery is OK; clean its terminals and case, and reinstall it.

     – If the voltage still drops below 6.5 V, the battery is no good; replace it.

Ignition Switch

Test

1. Disconnect the 7-P connector from the dash fuse box.

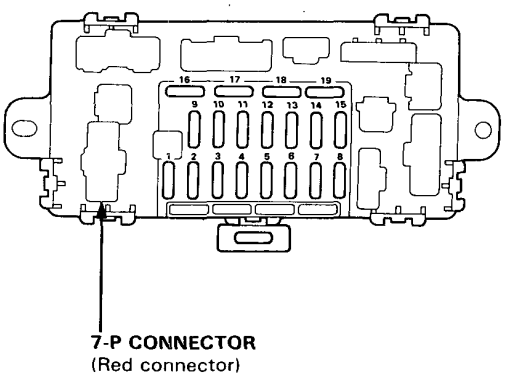

2. Check for continuity between the terminals in each switch position according to the table.

Terminal / Position	WHT/RED (ACC)	WHT (BAT)	BLK/YEL (IG1)	YEL (IG2)	BLK/WHT (ST)
0 (LOCK)					
I (ACC)	○——	——○			
II (ON)	○——	——○——	——○——	——○	
III (ST)		○——	——○——	——	——○

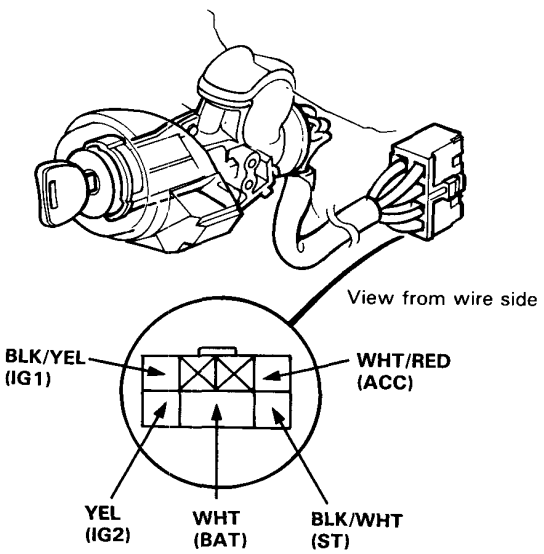

Electrical Switch Replacement

1. Remove the steering column lower cover.
2. Disconnect the 7-P connector from the dash fuse box.
3. Insert the key and turn it to "0 (LOCK)."
4. Remove the 2 screws and replace the base of the switch.

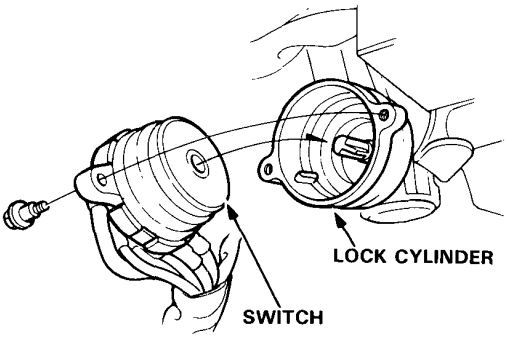

Lock Cylinder Replacement

1. Remove the steering column covers.
2. Remove the bulb/socket from the key light case by turning the socket 45°, then remove the screw and the key light case from the lock body.
3. Turn the ignition key to "I (ACC)."
4. Push the pin in and remove the lock cylinder from the lock body.

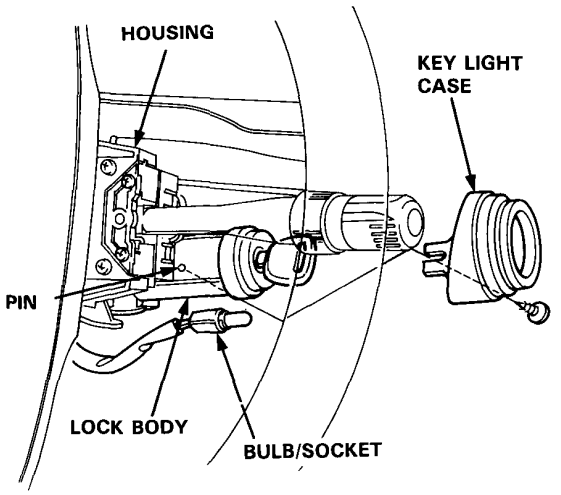

5. Turn the key to "0 (LOCK)" and align the lock cylinder with the lock body.
6. Turn the key almost to "I (ACC)" and insert the lock cylinder until the pin touches the body.
7. Turn the key to the "I (ACC)", push the pin and insert the lock cylinder into the lock body until the pin clicks into place.

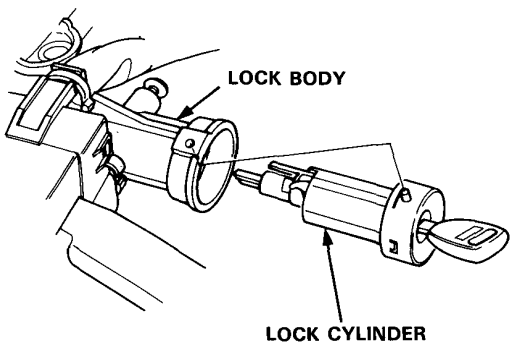

Steering Lock Replacement

1. Remove the steering column covers.
2. Center punch each of the 2 shear bolts and drill their heads off with a 3/16 in. drill bit.

   CAUTION: Do not damage the switch body when removing the shear bolt heads.

3. Remove the shear bolts from the switch body.

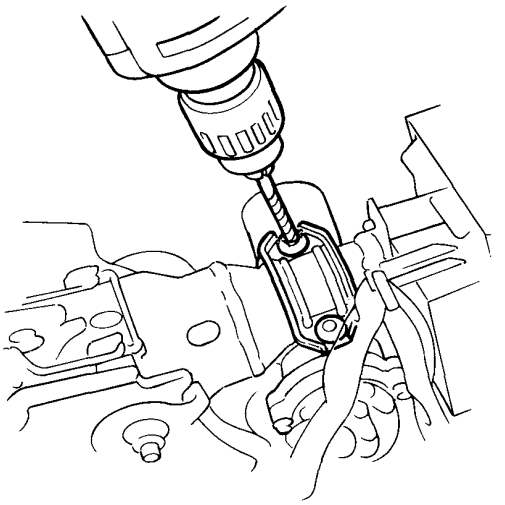

4. Install the new ignition switch without the key inserted.
5. Loosely tighten the new shear bolts.

   NOTE: Make sure the projection on the ignition switch is aligned with the hole in the steering column.

6. Insert the ignition key and check for proper operation of the steering wheel lock and that the ignition key turns freely.
7. Tighten the shear bolts until the hex heads twist off.

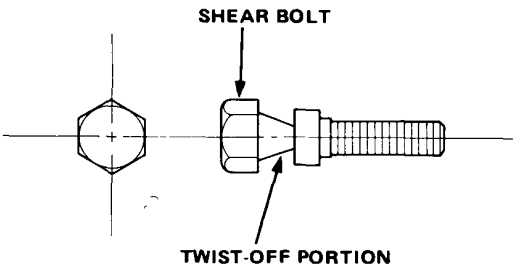

Component Location Index

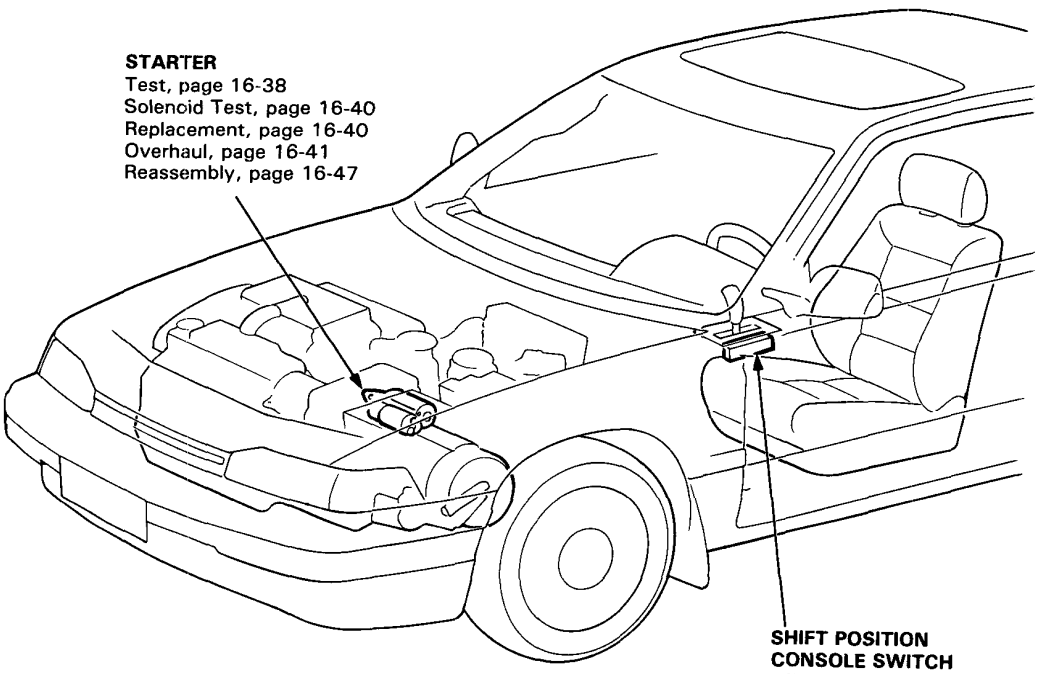

Circuit Diagram

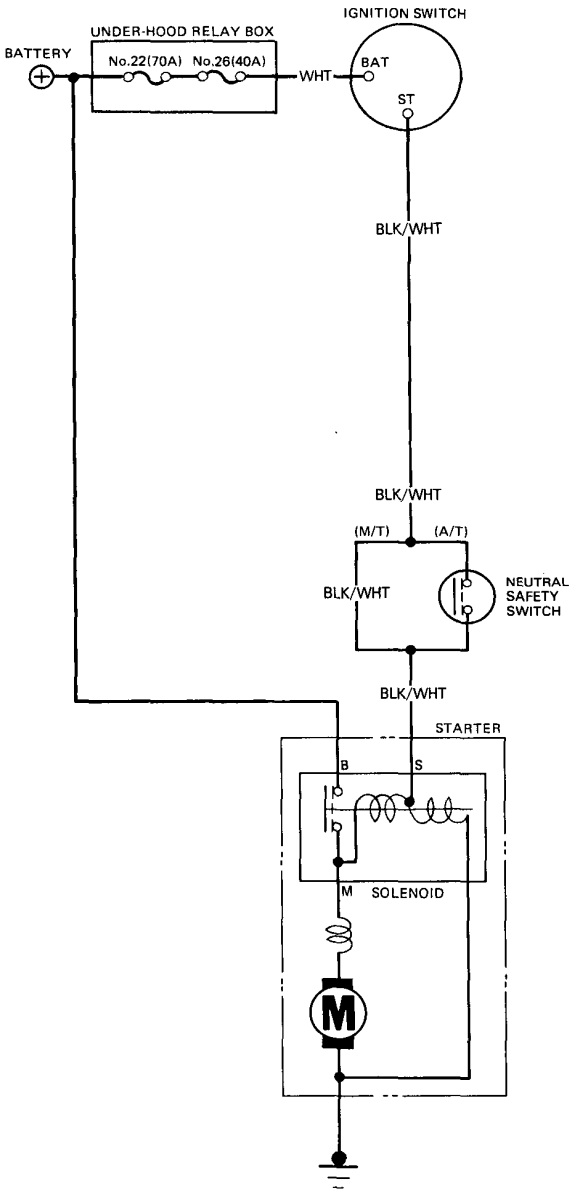

Starter Test

NOTE: The air temperature must be between 15 and 38°C (59 and 100°F) before testing.

Recommended Procedure:

Use a starter system tester.
Connect and operate the equipment in accordance with manufacturer's instructions.
Test and troubleshoot as described.

Alternate Procedure:

- Use the following equipment:
  - Ammeter, 0–400 A
  - Voltmeter, 0–20 V (accurate within 0.1 volt)
  - Tachometer, 0–1200 min^{-1}(rpm)
- Hook up voltmeter and ammeter as shown.

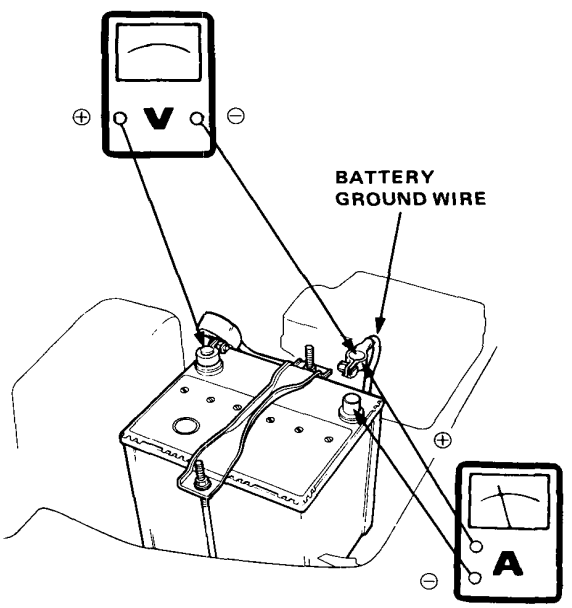

1. Disconnect the primary lead connector from the ignition coil.

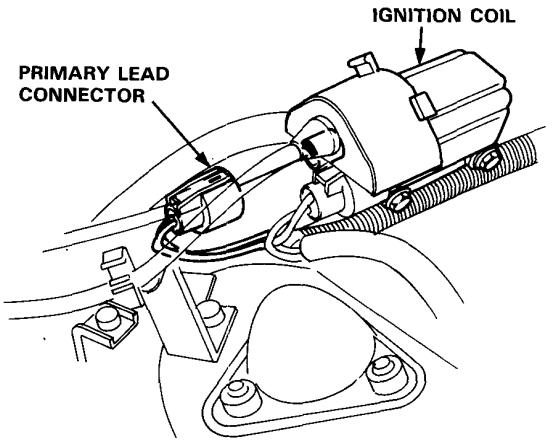

2. Check the starter engagement:
   Turn the ignition switch to "Start." The starter should crank the engine.
   - If the starter does not crank the engine, check the battery, battery positive wire and ground, and the wire connections for looseness or corrosion.
   - Test again.
     If the starter still does not crank the engine, bypass the ignition switch circuit as follows:
     Unplug the connector (BLK/WHT wire) from the starter. Connect a jumper wire from the battery positive (+) terminal to the solenoid terminal. The starter should crank the engine.

Nippon Denso:

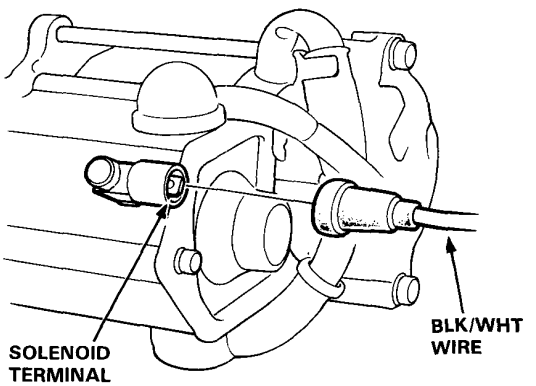

Mitsuba:

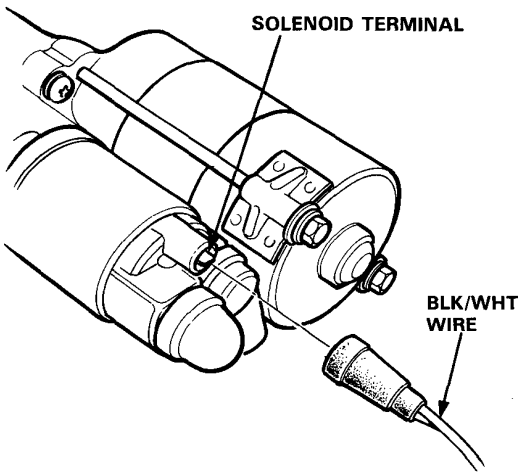

– If the starter still does not crank the engine, remove the starter and diagnose its internal problems.

– If the starter cranks the engine, check for an open in the BLK/WHT wire circuit between the starter and ignition switch, and connectors. Check the ignition switch. On cars with automatic transmission, check the shift position console switch (neutral safety switch) and connector.

3. Check for wear or damage:
The starter should crank the engine smoothly and steadily.

If the starter engages, but cranks the engine erratically, remove the starter motor. Inspect the starter, drive gear, and flywheel ring gear for damage.
Check the drive gear overrunning clutch for binding or slipping when the armature is rotated with the drive gear held. Replace the gears if damaged.

4. Check cranking voltage and current draw:
Voltage should be no less than specified volts as below.

1.4 kW: 8.5 volts
1.6 kW: 8.0 volts

Current should be no greater than 350 amperes.

If voltage is too low, or current draw too high, check for:

- Battery fully charged.
- Open circuit in starter armature commutator segments.
- Starter armature dragging.
- Shorted armature winding.
- Excessive drag in engine.

5. Check cranking rpm:
Engine speed during cranking should be above 100 min^{-1} (rpm).

- Loose battery or starter terminals.
- Excessively worn starter brushes.
- Open circuit in commutator segments.
- Dirty or damaged helical spline or drive gear.
- Defective drive gear overrunning clutch.

6. Check the starter disengagement:
Turn the ignition switch to "Start" and release to "Run." The starter drive gear should disengage from the flywheel ring gear.

If the drive gear hangs up on the flywheel ring gear, check:

- Solenoid plunger and switch for malfunction.
- Drive gear assembly for dirty or damaged overrunning clutch.

Starter Solenoid Test

1. Check the hold-in coil for continuity between the S terminal and the armature housing (ground).
   Coil is OK if there is continuity.

2. Check the pull-in coil for continuity between the S and M terminals.
   Coil is OK if there is continuity.

Nippon Denso:

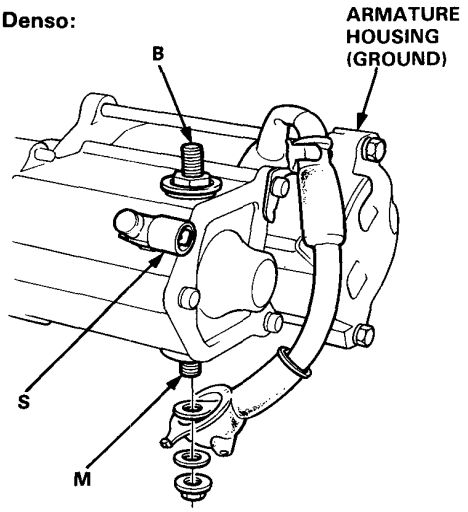

Mitsuba:

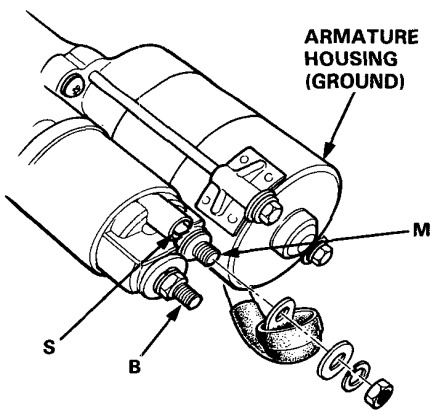

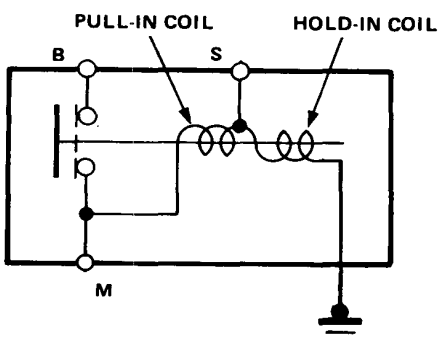

Starter Replacement

1. Disconnect the ground wire from the battery negative (–) post.

2. Disconnect the starter cable from the B terminal on the solenoid, and the BLK/WHT wire from the S terminal.

3. Remove the 2 bolts holding the starter, and remove the starter.

Nippon Denso:

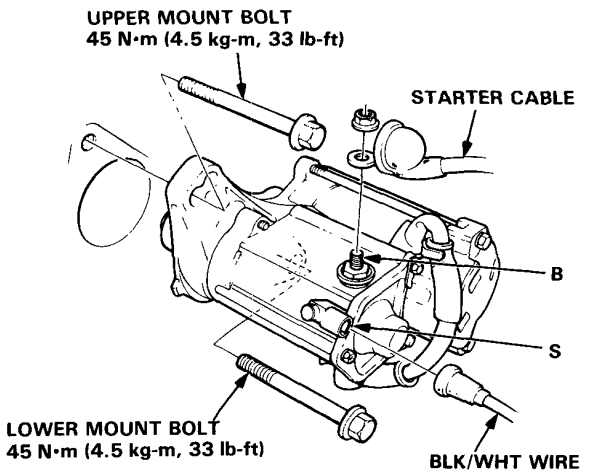

Mitsuba:

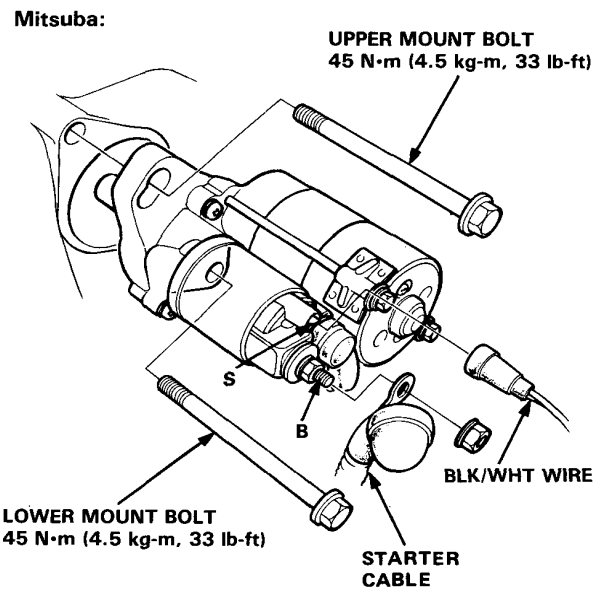

Starter Overhaul (Gear Reduction 1.6 kW, Nippon Denso)

CAUTION: ***Disconnect the ground wire from the battery post before removing the starter.***

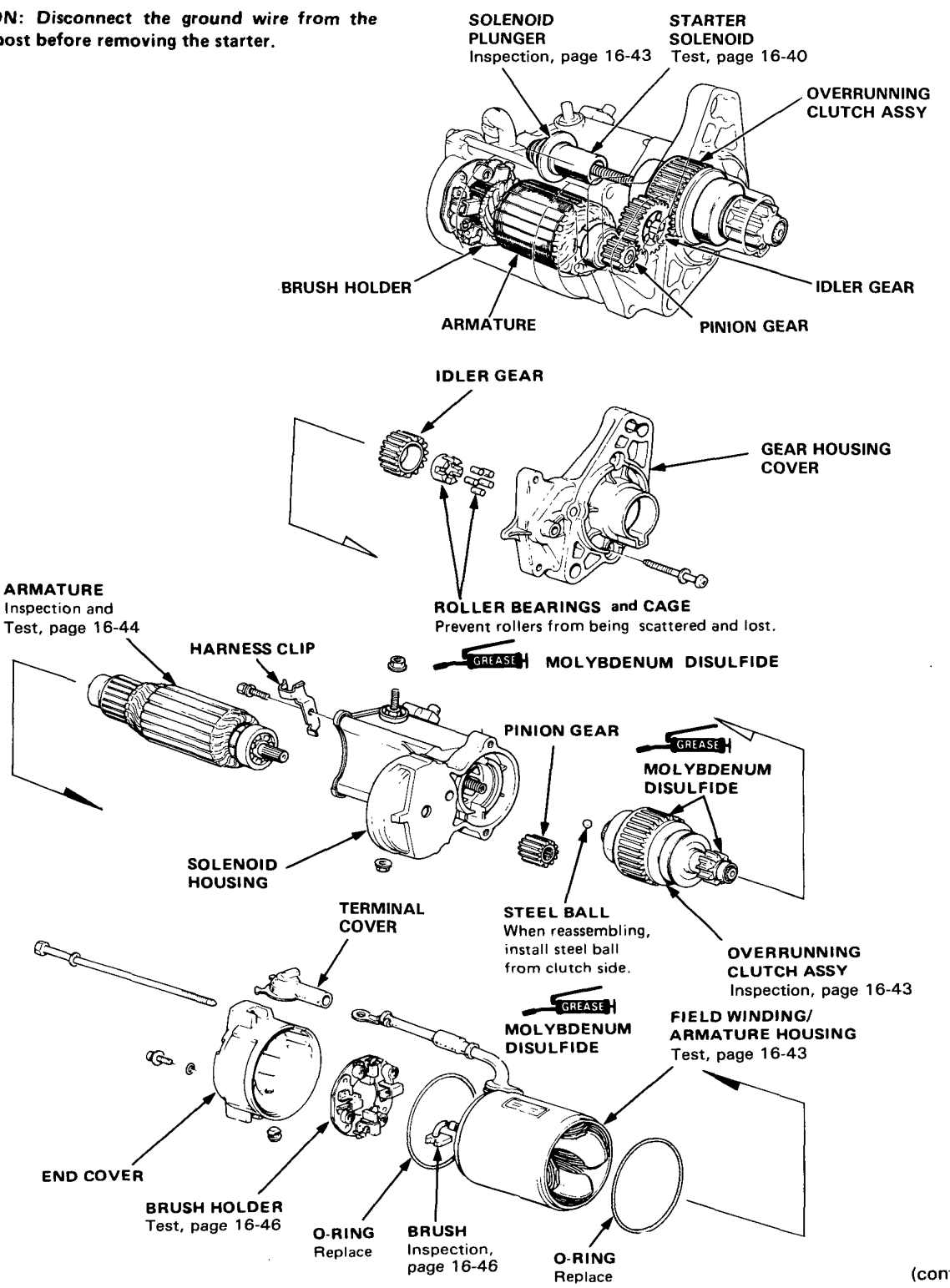

(cont'd)

Starter Overhaul (Gear Reduction 1.4 kW, Mitsuba)

CAUTION: Disconnect the ground wire from the battery post before removing the starter.

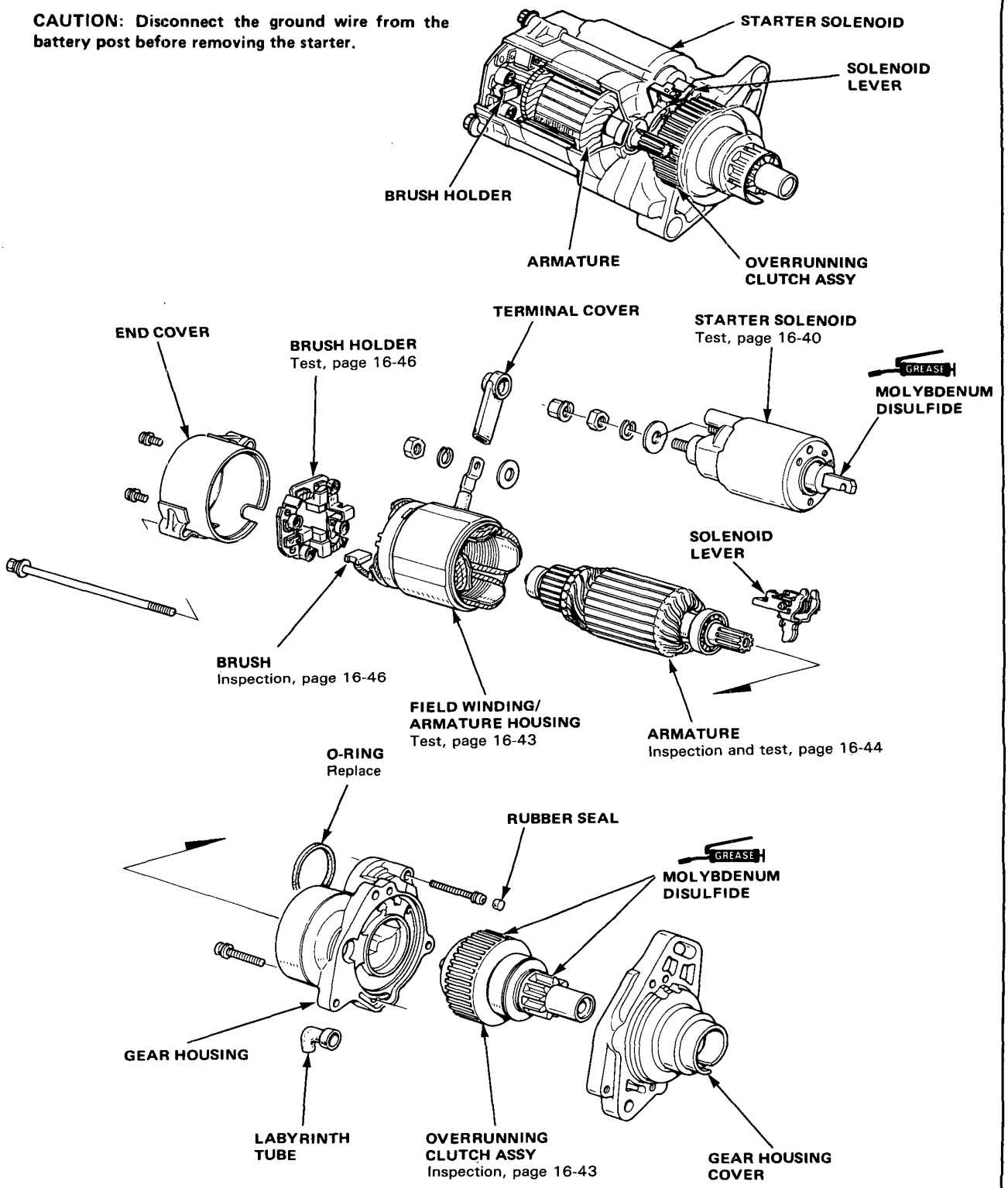

Overrunning Clutch Inspection

Move the overrunning clutch along the shaft.

If it doesn't move freely, or if the clutch slips when the armature is rotated while holding the drive gear, replace the clutch assembly.

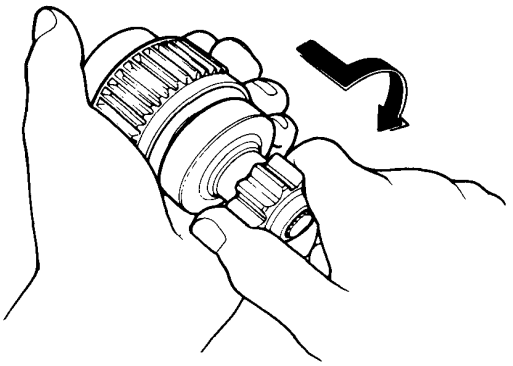

If the gear is worn or damaged, replace the overrunning clutch assembly; the gear is not available separately.

NOTE: Check condition of the flywheel or torque converter ring gear if the starter drive gear teeth are damaged.

Starter Field Winding Test

1. Check for continuity between the brushes. If no continuity, replace the armature housing.
2. Check for continuity between each brush and the armature housing (ground).
   If continuity exists, replace the armature housing.

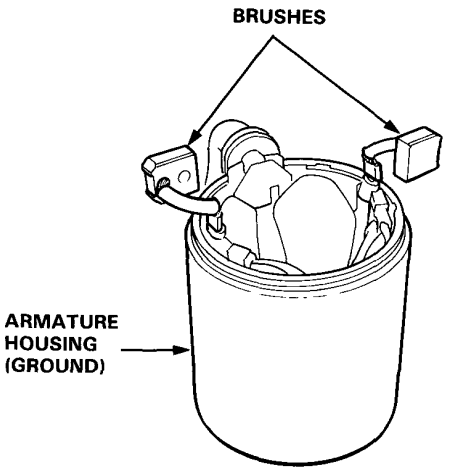

Solenoid Plunger Inspection

Check the contact points, and face of the starter solenoid plunger for burning, pitting or any other defects. If surfaces are rough, recondition with a strip of #500 or #600 sandpaper.

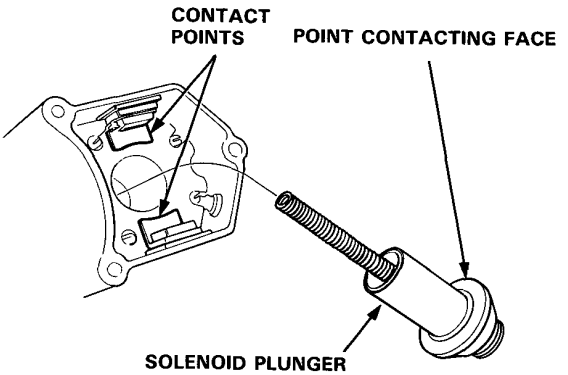

Armature Inspection and Test

1. Inspect the armature for wear or damage due to contact with the field coil magnets.

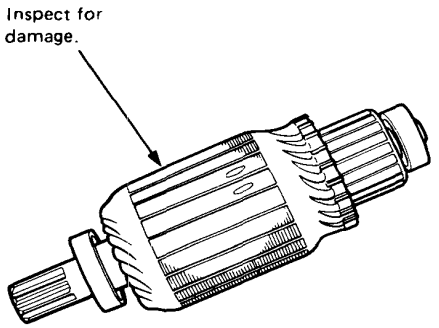

2. A dirty or burnt commutator surface may be resurfaced with emery cloth or a lathe within the following specifications.

Commutator Diameter

Standard (New):
Nippon Denso: 29.9–30.0 mm (1.8 in)
Mitsuba: 28.0–28.1 mm (1.11 in)
Service Limit:
Nippon Denso: 29.0 mm (1.14 in)
Mitsuba: 27.5 mm (1.08 in)

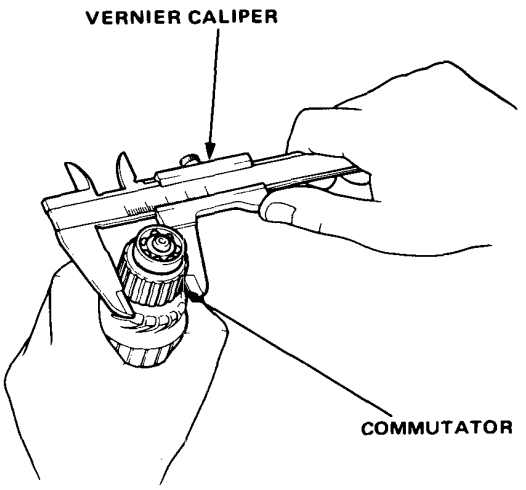

Commutator Runout

Standard (New):
Nippon Denso: 0–0.05 mm (0–0.002 in)
Mitsuba: 0–0.02 mm (0–0.001 in)
Service Limit:
Nippon Denso: 0.40 mm (0.016 in)
Mitsuba: 0.05 mm (0.002 in)

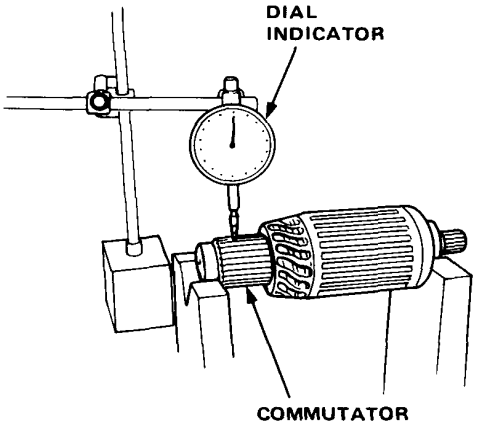

3. If the commutator runout and diameter are within limits, check the commutator for damage or for carbon dust or brass chips between the segments.

4. If surface is dirty, recondition it with a #500 or #600 sandpaper. Then, check mica depth. If necessary, undercut mica with a hacksaw blade to achieve proper depth.

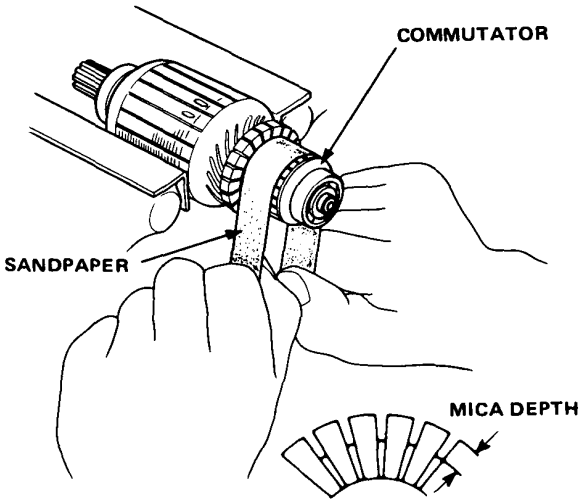

Commutator Mica Depth

Standard (New):
Nippon Denso: 0.5—0.8 mm (0.019—0.031 in)
Mitsuba: 0.4—0.5 mm (0.016—0.020 in)
Service Limit:
Nippon Denso: 0.20 mm (0.008 in)
Mitsuba: 0.15 mm (0.006 in)

5. Check for continuity between each segment of the commutator. If an open circuit exists between any segment, replace the armature.

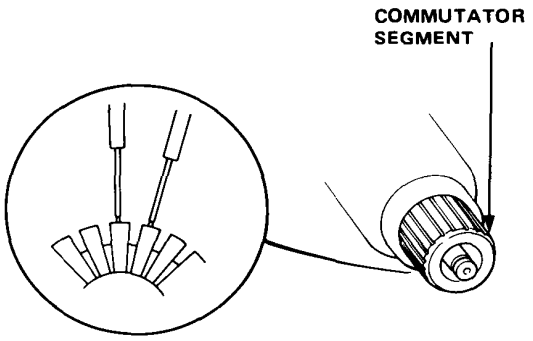

6. Place the armature on an armature tester. Hold a hacksaw blade on the armature core.

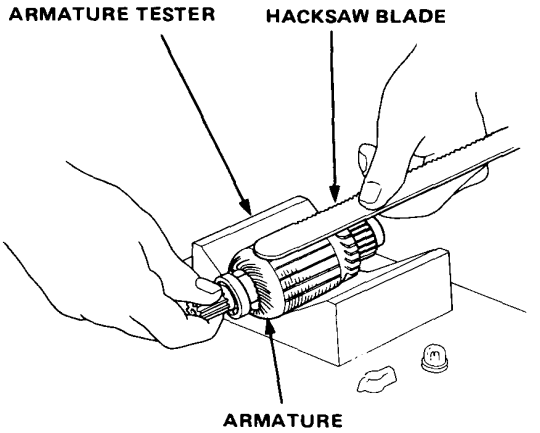

If the blade is attracted to the core or vibrates while core is turned, the armature is shorted. Replace the armature.

7. With an ohmmeter, check that no continuity exists between the commutator and armature coil core, and between the commutator and armature shaft. If continuity exists, replace the armature.

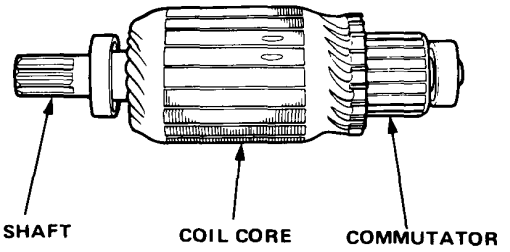

Starter Brush Holder Test

1. Check that there is no continuity between the ⊕ and ⊖ brush holders.
   If continuity exists, replace the brush holder assembly.

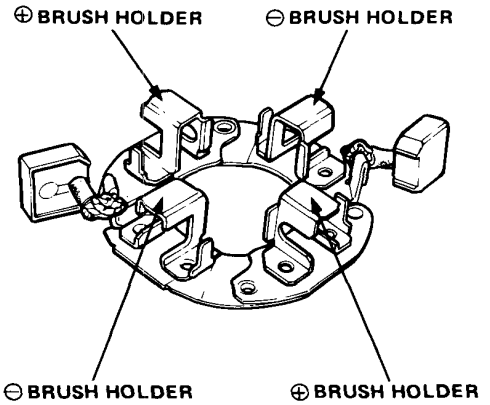

2. Insert the brush into the brush holder, and bring the brush into contact with commutator, then attach a spring scale to the spring. Measure the spring tension at the moment the spring lifts off the brush.

Spring Tension:
Nippon Denso: 17.0–24.0 N (1.7–2.4 kg, 3.7–5.3 lb)
Mitsuba: 18.5–23.5 N (1.8–2.4 kg, 4.0–5.1 lb)

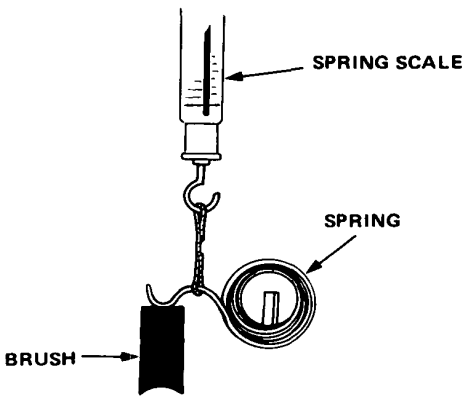

Starter Brush Inspection

Measure brush length. If not within service limit, replace the armature housing and brush holder assembly.

Brush Length

Standard (New):
Nippon Denso: 15.0–15.5 mm (0.59–0.61 in)
Mitsuba: 14.3–14.7 mm (0.56–0.58 in)
Service Limit:
Nippon Denso: 10.0 mm (0.39 in)
Mitsuba: 9.3 mm (0.37 in)

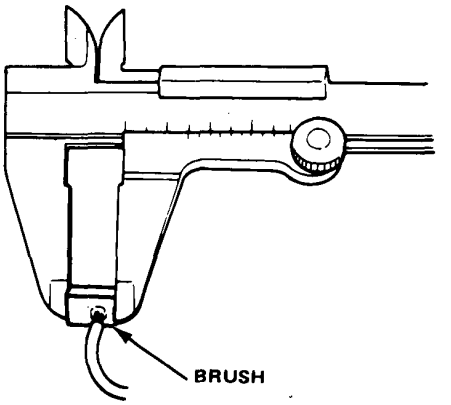

NOTE: To seat new brushes after installing them in their holders, slip a strip of #500 or #600 sandpaper, with the grit side up, over the commutator, and smoothly rotate the armature. The contact surface of the brushes will be sanded to same contour as the commutator.

Starter Reassembly

Reassemble the starter in the reverse order of disassembly.

1. Pry back each brush spring with a screwdriver, then position the brush about halfway out of its holder, and release the spring to hold it there.

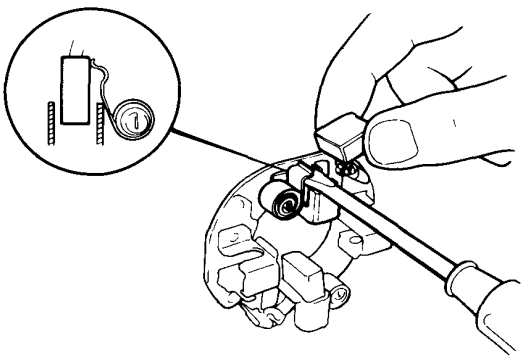

2. Install the armature in the housing. Next pry back each brush spring again and push the brush down until it seats against the commutator, then release the spring against the end of the brush.

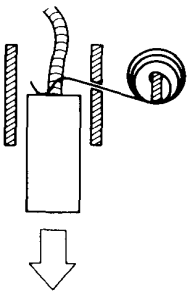

3. Install the end cover on the brush holder.

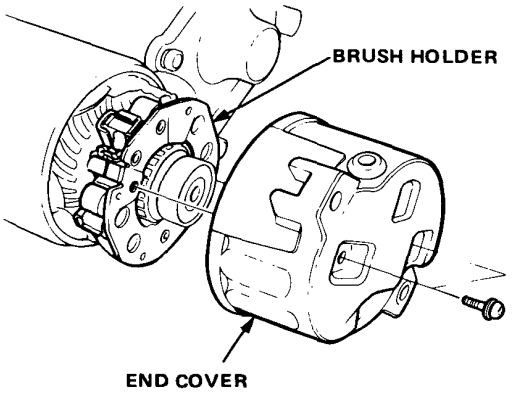

Component Location Index

- **IGNITION TIMING CONTROL SYSTEM**
  Troubleshooting, section 6
  Inspection and Setting, page 16-50

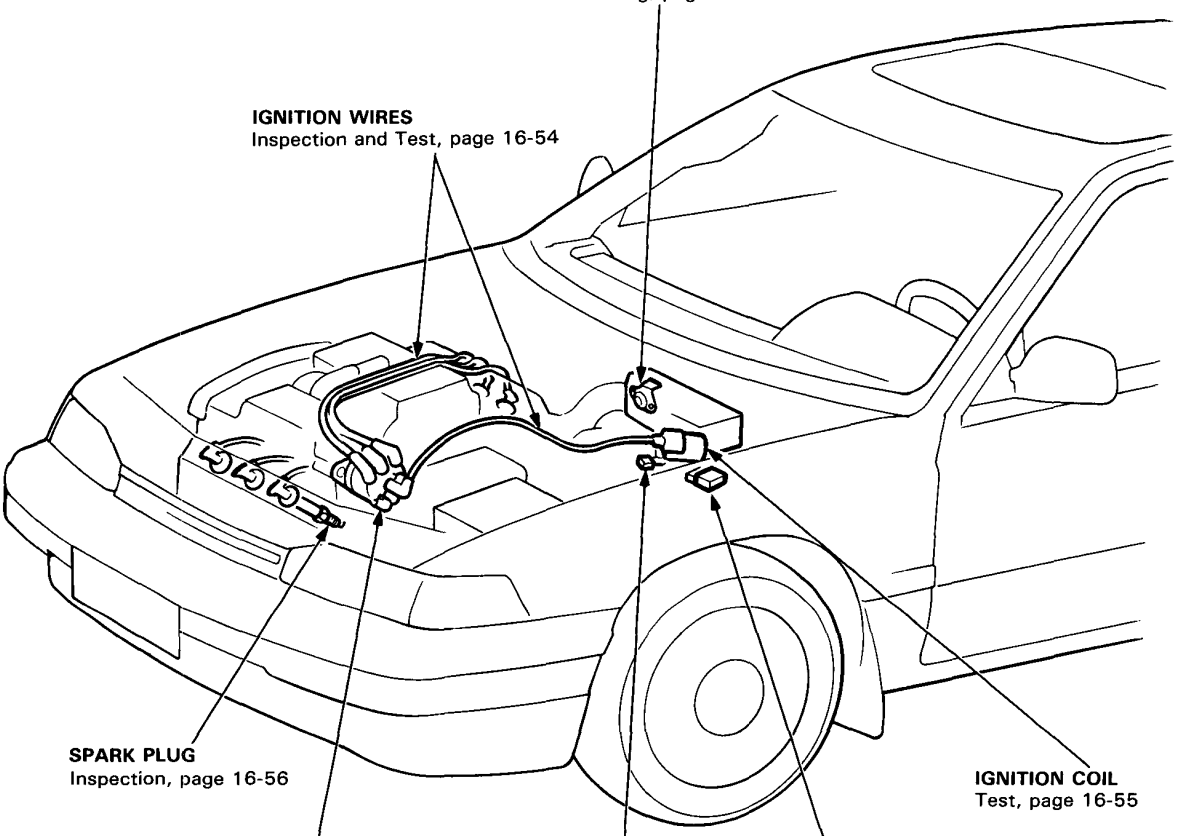

Circuit Diagram

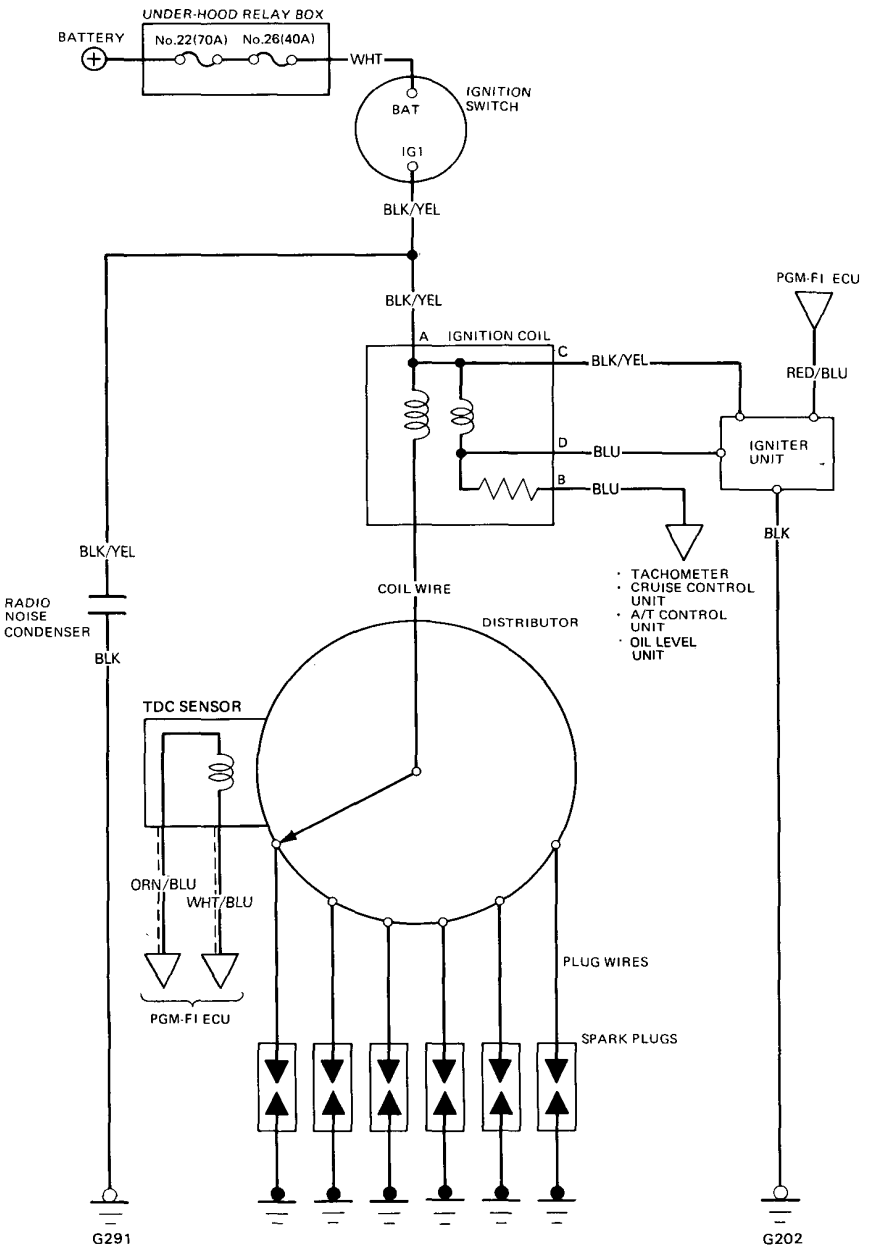

Ignition Timing Inspection and Setting

1. Start the engine and allow it to warm up (cooling fan comes on).

2. Connect a timing light to the engine; while the engine idles, point the light toward the pointer on the timing belt cover.

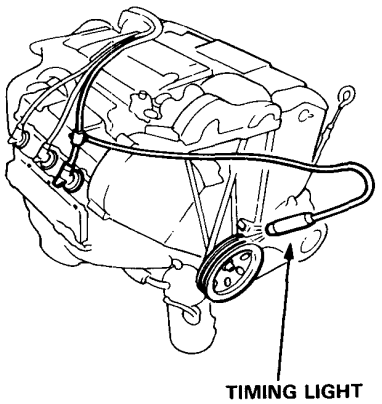

3. Inspection ignition timing at idle.

   Ignition Timing:
   15 ± 2° BTDC (RED)
   KF, KB, KE, KQ: at 720 ± 50 min⁻¹ (rpm) in neutral
   KG, KX: at 680 ± 50 min⁻¹ (rpm) in neutral

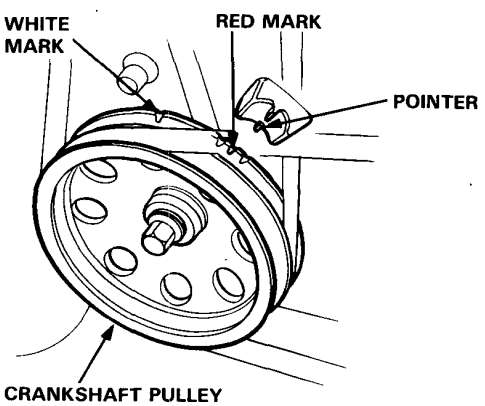

4. Adjust ignition timing, if necessary, by turning the adjusting screw on the ignition timing adjuster in the control box.

5. Remove the control box uppor and lower covers.

   NOTE: LHD shown, RHD similar.

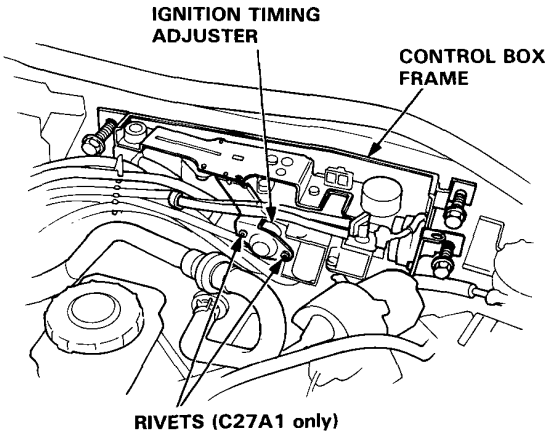

6. For C27A1 engine only, drill the 2 rivets off with a 3/16 in. drill bit, then separate the stay cover from the adjuster.

   CAUTION: Do not damage the adjuster when removing the rivets.

7. Adjust as necessary by turning the adjusting screw on the adjuster; turn the adjusting screw counterclockwise to retard the timing, or clockwise to advance the timing.

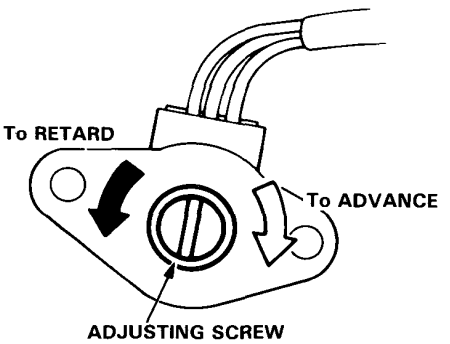

8. After adjusting, reinstall the stay cover to the ignition timing adjuster with new rivets, then reinstall the adjuster to the control box.

Distributor Removal/Installation

Removal

1. Remove the engine wire harness and connectors from the distributor.

2. Disconnect the spark plug wires and coil wire from the distributor cap.

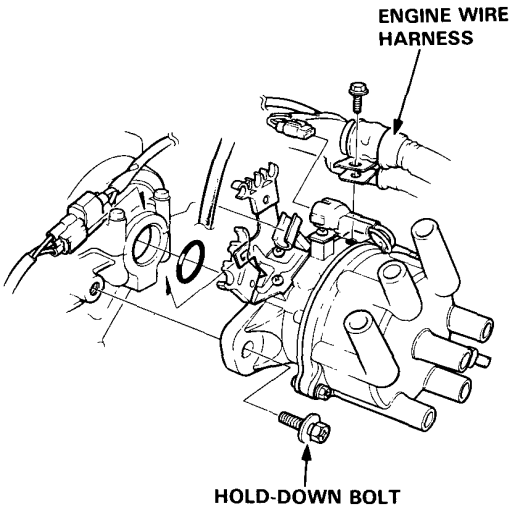

3. Remove the distributor hold-down bolt, then remove the distributor from the cylinder head.

Installation

1. Coat a new O-ring with engine oil then install it.

2. Slip the distributor into position.

   NOTE: The lugs on the end of the distributor and its mating grooves in the camshaft end are both offset to eliminate the possibility of installing the distributor 180° out of time.

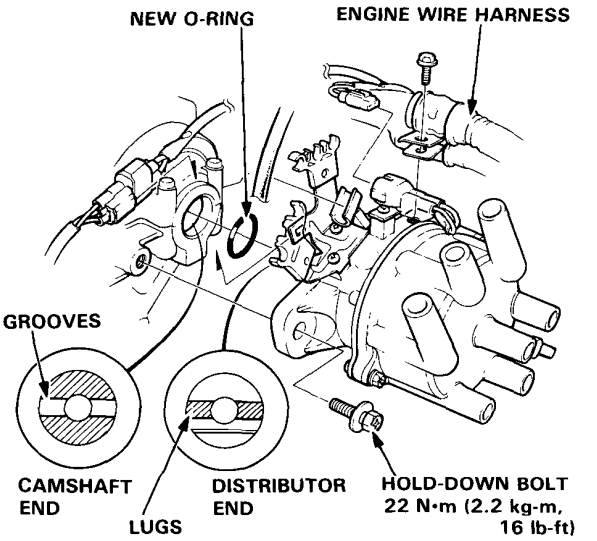

3. Install the hold-down bolt and tighten.

4. Connect the engine wire harness and connector to the distributor.

5. Connect the coil wire and the spark plug wires as shown.

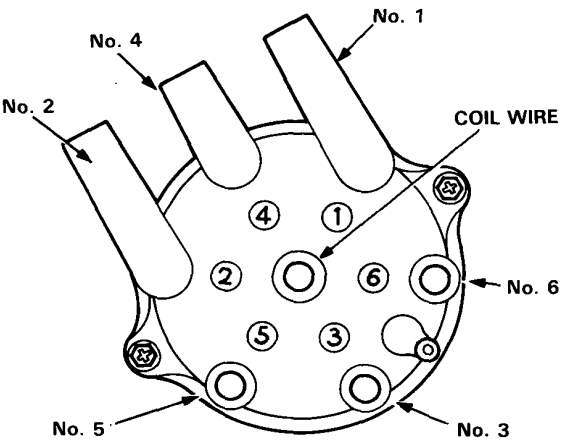

Distributor Overhaul

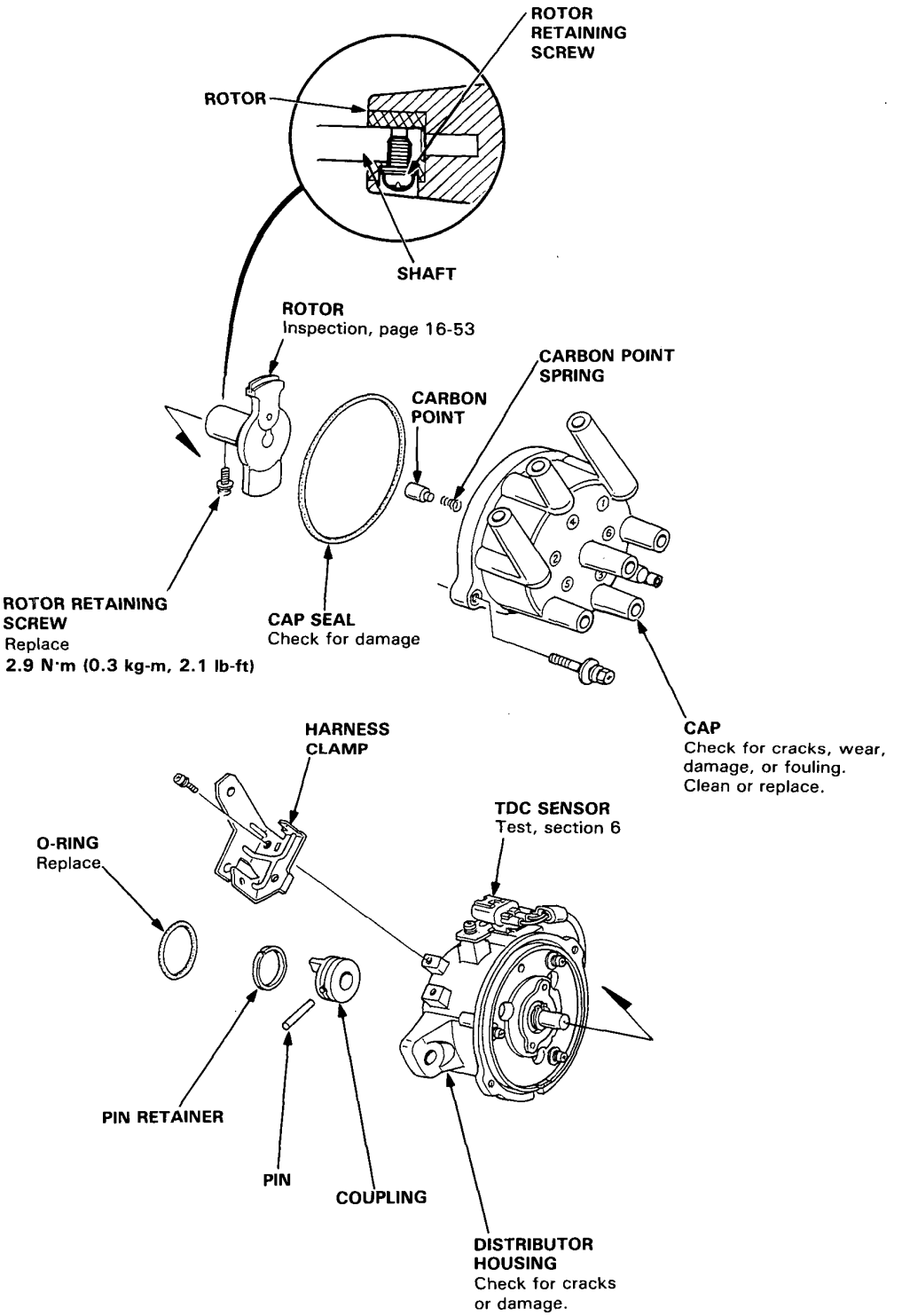

Distributor Top End Inspection

1. Check for rough or pitted rotor and cap terminals.
2. Scrape or file off the carbon deposits.
   Smooth the rotor terminal with an oil stone or #600 sandpaper if rough.
3. Check the distributor cap for cracks, wear and damages. If necessary, clean or replace it.

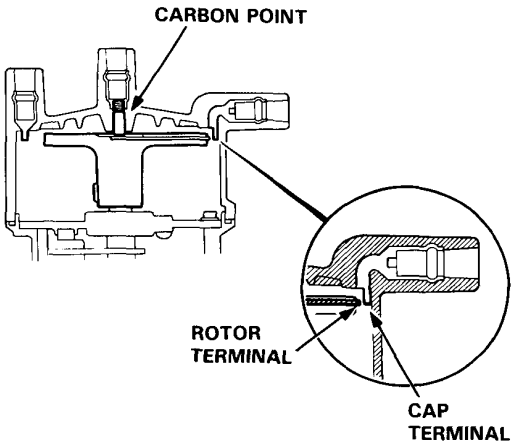

Distributor Reassembly

Reassembly the distributor in the reverse order of disassembly.

1. Install the rotor, then turn it so that it faces in the direction shown (toward the No.1 cylinder).

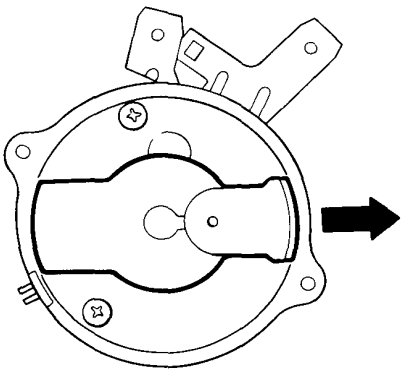

2. Set the thrust washer and coupling on the shaft.
3. Check that the rotor is still pointing toward the No.1 cylinder, then align the index mark on the housing with the index mark on the coupling.

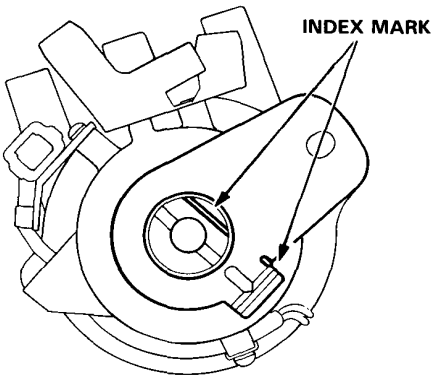

4. Drive in the pin and secure it with the pin retainer.

Radio Condenser Capacity Test

1. Use a commercially available condenser tester. Connect the tester probes and measure the condenser capacity.

   Condenser Capacity: 0.47 ± 0.09 microfarads (μF)

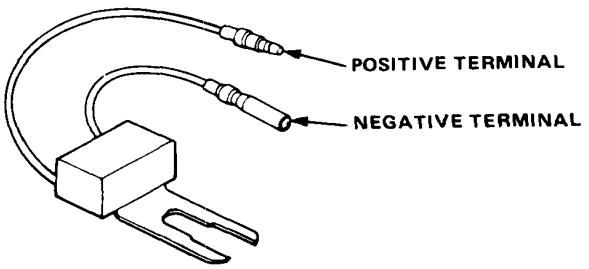

   NOTE: The radio condenser is intended to reduce ignition noise; however, condenser failure may cause the engine to stop running.

2. If not within the specifications, replace the radio condenser.

Ignition Wire Inspection and Test

CAUTION: Carefully remove the ignition wires by pulling on the rubber boots. Do not bend the wire or the conductor may be broken.

1. Check the condition of the wire terminals. If any terminal is corroded, clean it, and if it is broken or distorted, replace the wire.

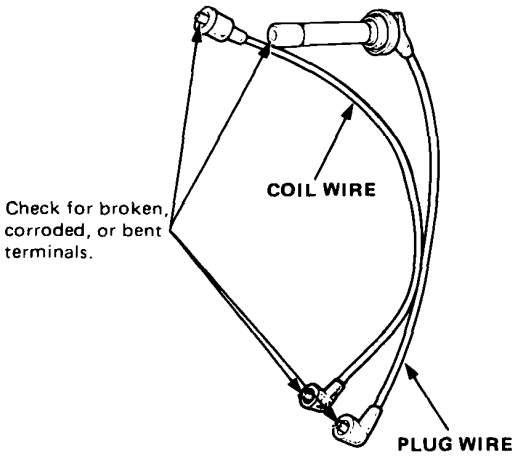

2. Connect ohmmeter probes and measure resistance.

   Ignition Wire Resistance:
   25,000 ohms max. at 20°C (70°F)

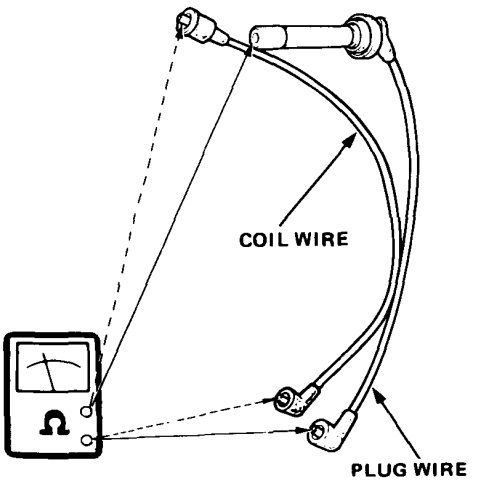

3. If resistance exceeds 25,000 ohms, replace the ignition wire.

Ignition Coil Test

1. With the ignition switch OFF, disconnect the primary connectors and the coil wire.

2. Using an ohmmeter, measure resistance between the terminals. Replace the coil if the resistance is not within specifications.

   NOTE: Resistance will vary with the coil temperature; specifications are at 20°C (70°F).

   Primary Winding Resistance
   (between the A and D terminals):
   0.3–0.4 ohms
   Secondary Winding Resistance
   (between the A and secondary winding terminals):
   9,040–13,560 ohms
   Resistance between the B and D terminals:
   2,090–2,310 ohms

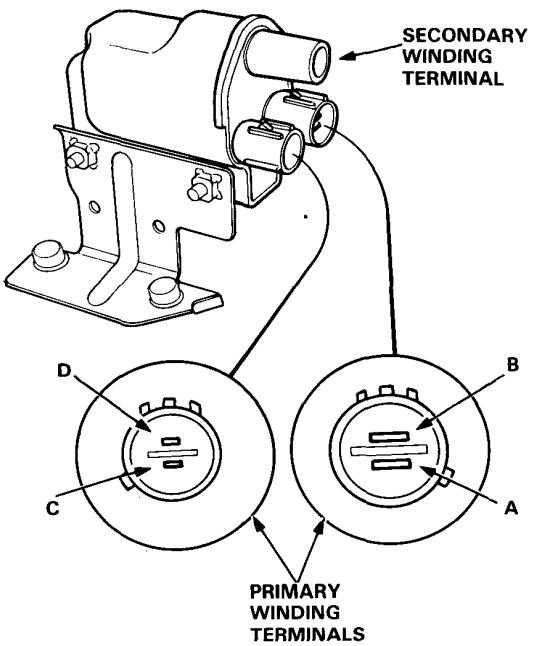

3. Check for continuity between the A and C terminals.
   Replace the coil if there is no continuity.

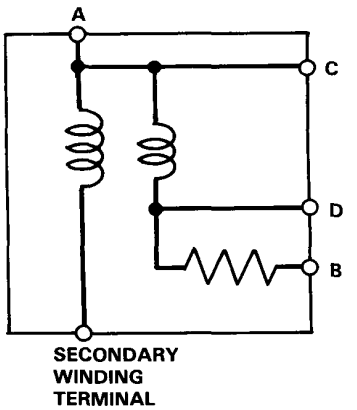

Distributor Removal/Installation

Removal

1. Remove the engine wire harness and connectors from the distributor.

2. Disconnect the spark plug wires and coil wire from the distributor cap.

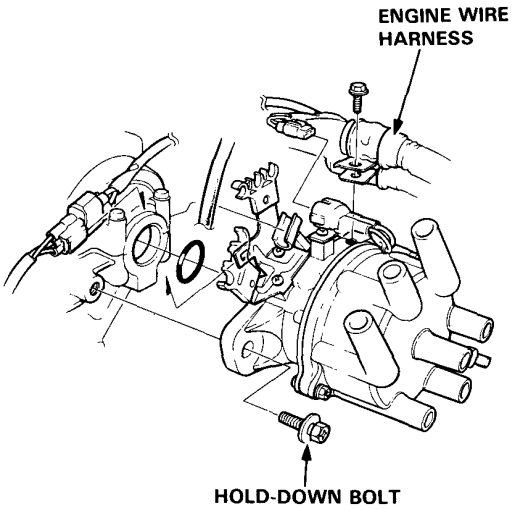

3. Remove the distributor hold-down bolt, then remove the distributor from the cylinder head.

Installation

1. Coat a new O-ring with engine oil then install it.

2. Slip the distributor into position.

   NOTE: The lugs on the end of the distributor and its mating grooves in the camshaft end are both offset to eliminate the possibility of installing the distributor 180° out of time.

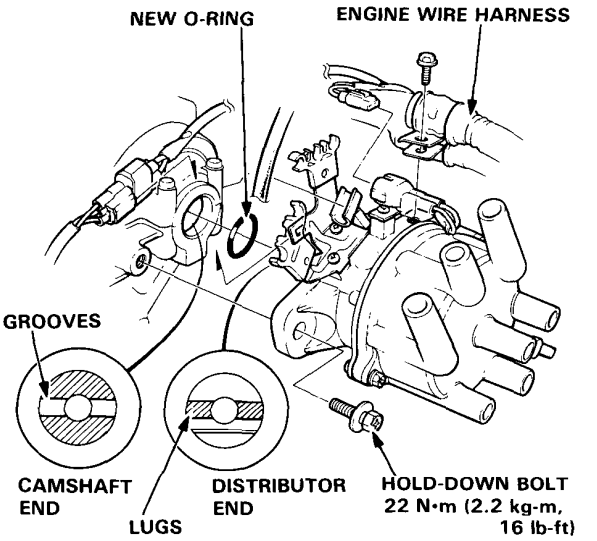

3. Install the hold-down bolt and tighten.

4. Connect the engine wire harness and connector to the distributor.

5. Connect the coil wire and the spark plug wires as shown.

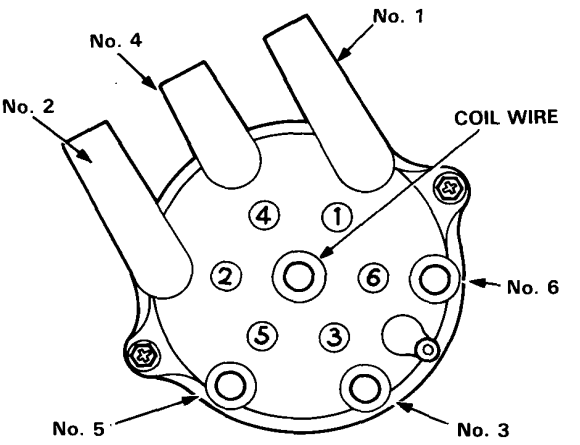

Spark Plug Inspection

1. Inspect the electrodes and ceramic insulator for:

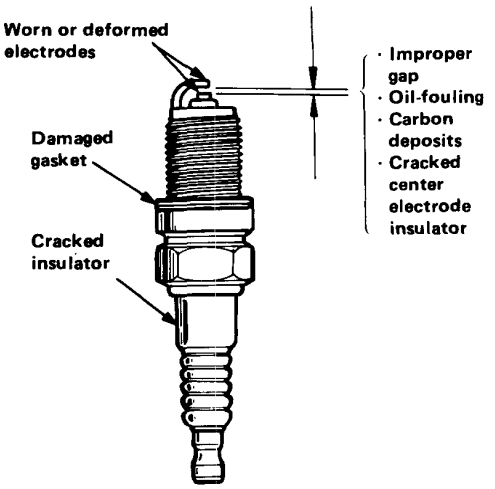

Burned or worn electrodes may be caused by:
- Lean fuel mixture
- Advanced ignition timing
- Loose spark plug
- Plug heat range too high
- Insufficient cooling

Fouled plug may be caused by:
- Rich fuel mixture
- Retarded ignition timing
- Oil in combustion chamber
- Incorrect spark plug gap
- Plug heat range too low
- Excessive idling/low speed running
- Clogged air cleaner element
- Deteriorated ignition coil or ignition wires

2. Replace the plug if the center electrode is rounded as shown below:

Spark Plug:
BCPR6E-11 (NGK), Q20PR-U11 (ND)
BCPR6EY-N11 (NGK)*2
BCPR7E-11 (NGK), Q22PR-U11 (ND)
BCPR7EY-N11 (NGK)*2
BCPR5E-11 (NGK)*1, Q16PR-U11 (ND)*1
BCPR5EY-N11 (NGK)*1
(or equivalent)

***1: KQ only**
***2: With catalytic converter**

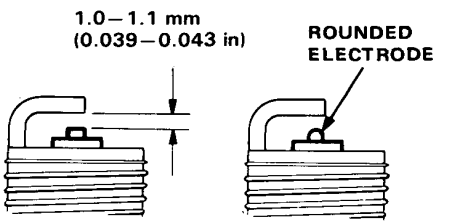

3. Adjust the gap with a suitable gapping tool.

Electrode Gap: 1.0–1.1 mm (0.039–0.043 in)

4. Screw the plugs into the cylinder head finger tight, then torque them to 22 N·m (2.2 kg-m, 16 lb-ft).

NOTE: Apply a small quantity of anti-seize compound to the plug threads before installing.

Component Location Index

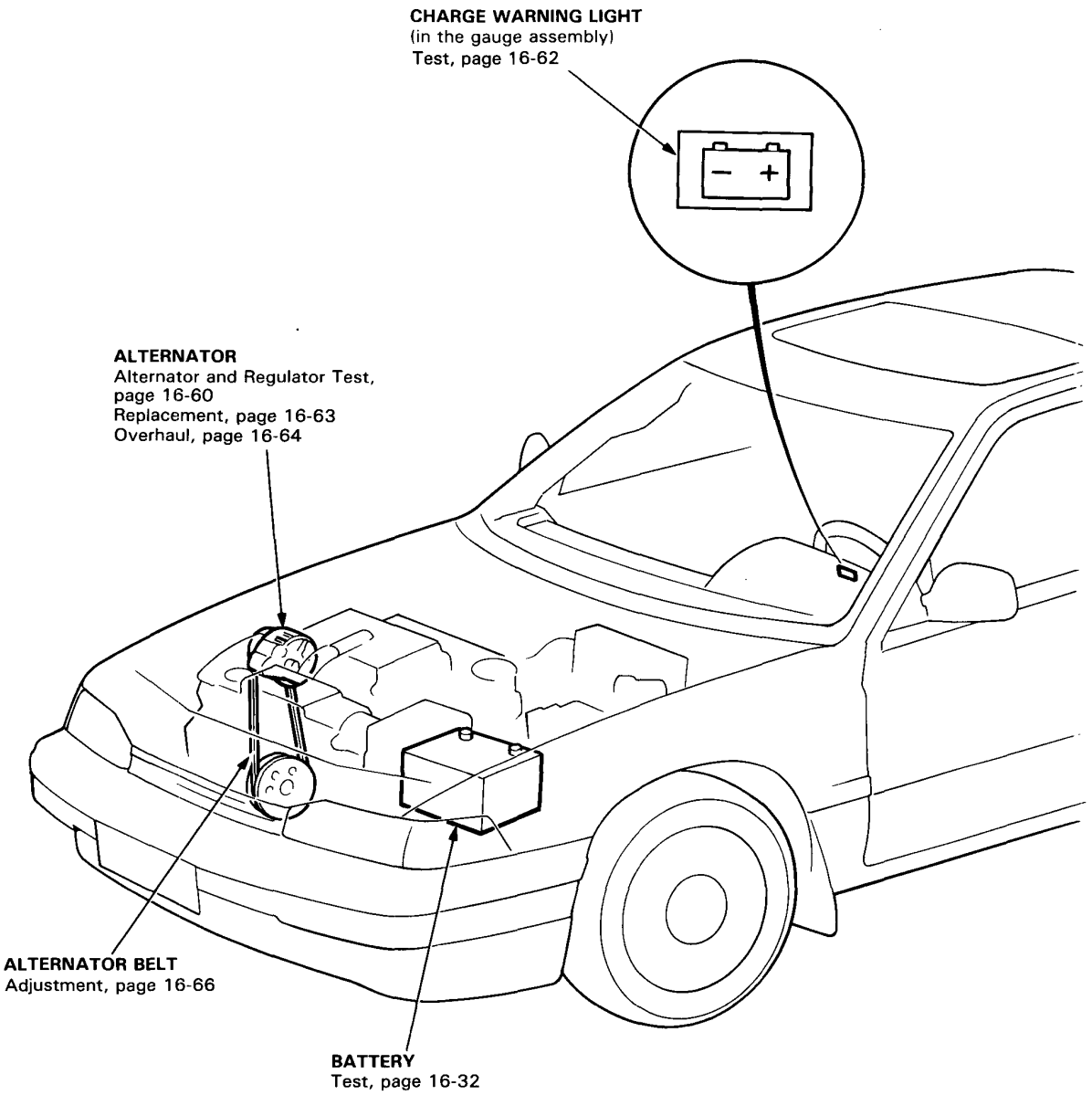

Circuit Diagram

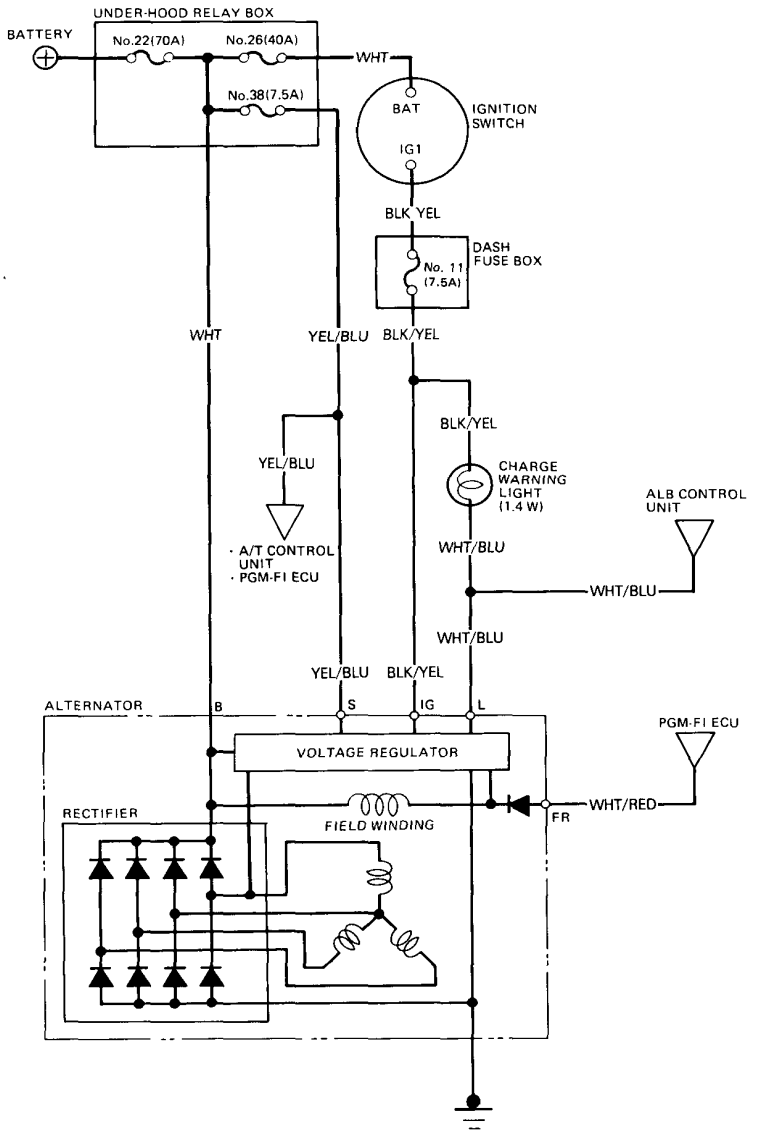

Alternator and Regulator Test

1. First make sure you have a good battery, and that the alternator belt is tight and in good condition. Also make sure the connections at the alternator and main fuses are good. Next, check the No.11 (7.5 A) fuse in the dash fuse box and the No.38 (7.5 A) fuse in the under-hood relay box. (If blown, the charge warning light will come on even if the system's working properly.)

2. Disconnect the alternator connector from the alternator.
   With the ignition switch on, there should be battery voltage between the IG (BLK/YEL) terminal and body ground, and between the S (YEL/BLU) terminal and body ground.

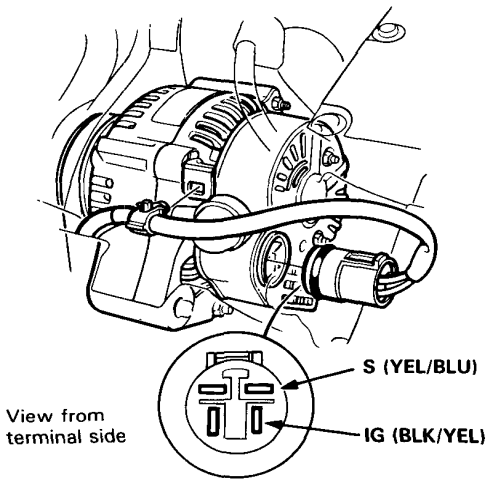

- If there is no voltage, check for an open in the BLK/YEL wire between the dash fuse box and the voltage regulator, or the YEL/BLU wire between the under-hood relay box and the voltage regulator.

- If there is battery voltage, go to step 3.

3. If these check OK, connect a voltmeter between the alternator B terminal and body ground, and an ammeter (100 amp capacity or higher) between the alternator B terminal and the WHT wire as shown. (An inductive pick up can be used instead of disconnecting the WHT wire.)

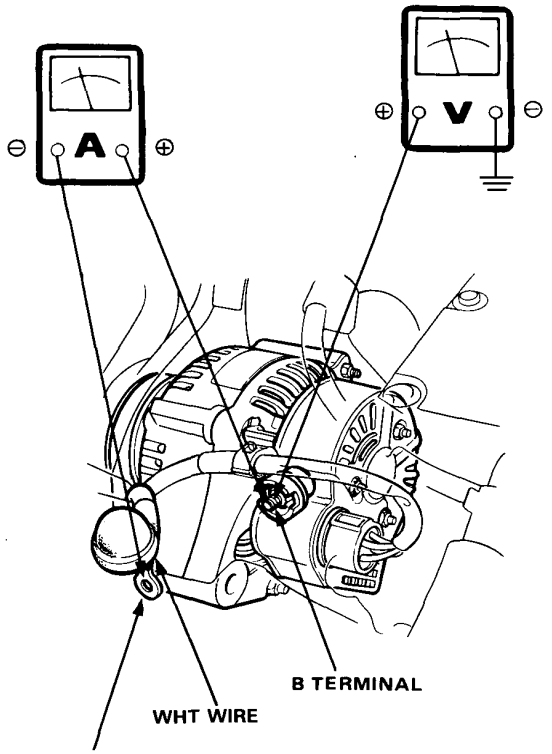

To avoid shorting to ground, cover at the terminal with an insulator.

4. Start the engine, and turn on the headlights, blower motor, rear window defogger, etc.

   NOTE: If voltage stays above 13.5 V, apply electrical load more to lower the voltage to less than 13.5 V.
   If the voltage exceeds 16 V, stop the engine and replace the voltage regulator.

5. Compare the readings to the chart below. If no output or below specification, go to step 7. If output is within specification, go to step 6.

   NOTE: Subtract 5 to 10 amperes from the maximum reading due to engine operation.

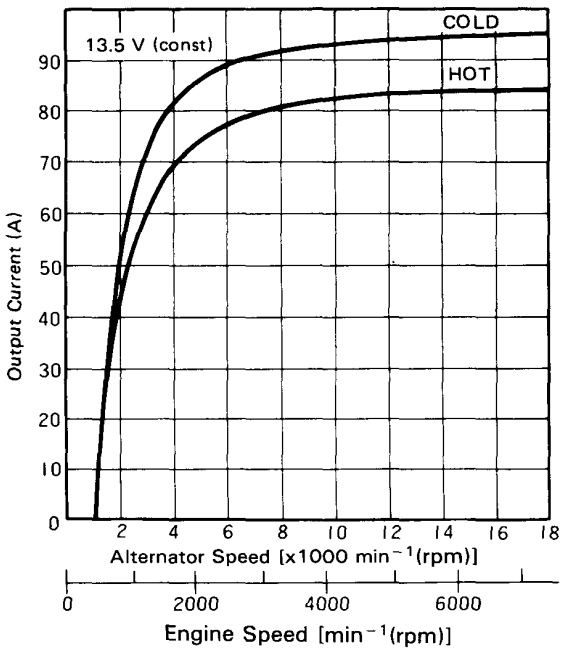

6. Turn off all loads in step 4, then measure the alternator output voltage at 1,500 min^{-1}(rpm).

   - If the voltage is between 13.9 V and 15.1 V, the alternator and regulator are OK.
     If the charge warning light is still on, proceed to the Charge Warning Light Test (see page 16-62).

7. Perform full field test: Insert a short screwdriver into the full field access hole at the back of the alternator. While it's touching the brush screw, ground the screwdriver with a jumper lead to a convenient clean ground.
   Note the amperage while grounding the screwdriver.

   CAUTION: Ground the screwdriver for as short a time as possible. Do not exceed the maximum recommended voltage (16 V). There could possibly be damage to electrical components in the system.

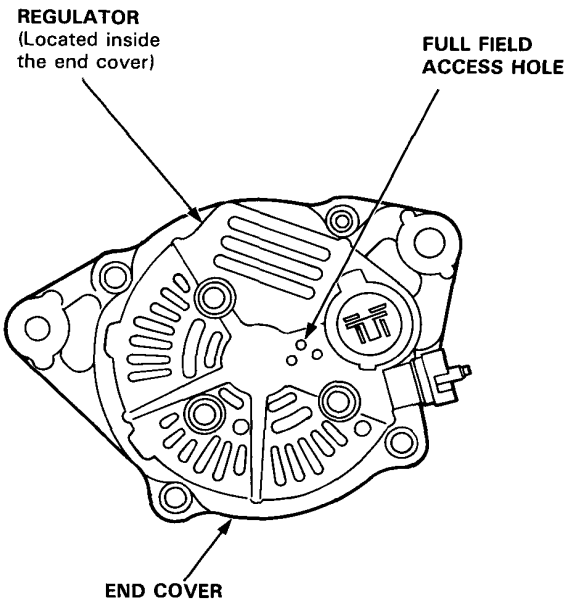

8. Now compare the amperage reading from the full - field test with the specifications shown in the graph of the alternator output.

   - If the amperage is within specification, replace the regulator.
   - If the amperage is not within specification, replace the alternator.

Cooling Fan Control

Component Location Index

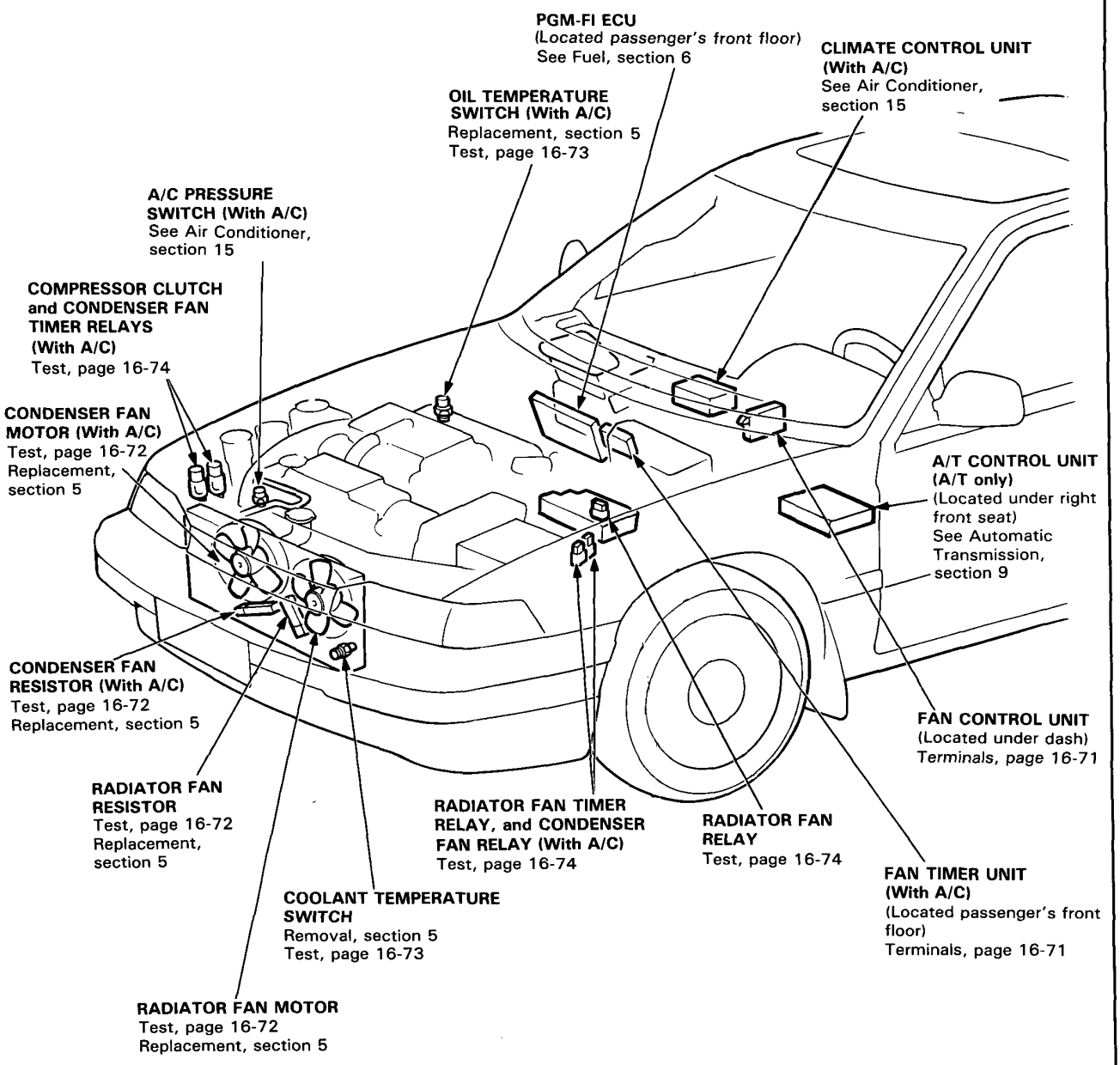

Cooling Fan Control

Circuit Diagram (With A/C)

NOTE: Several different wires have the same color. They have been given a number suffix to distinguish them (for example YEL/BLK¹ and YEL/BLK² are not the same).

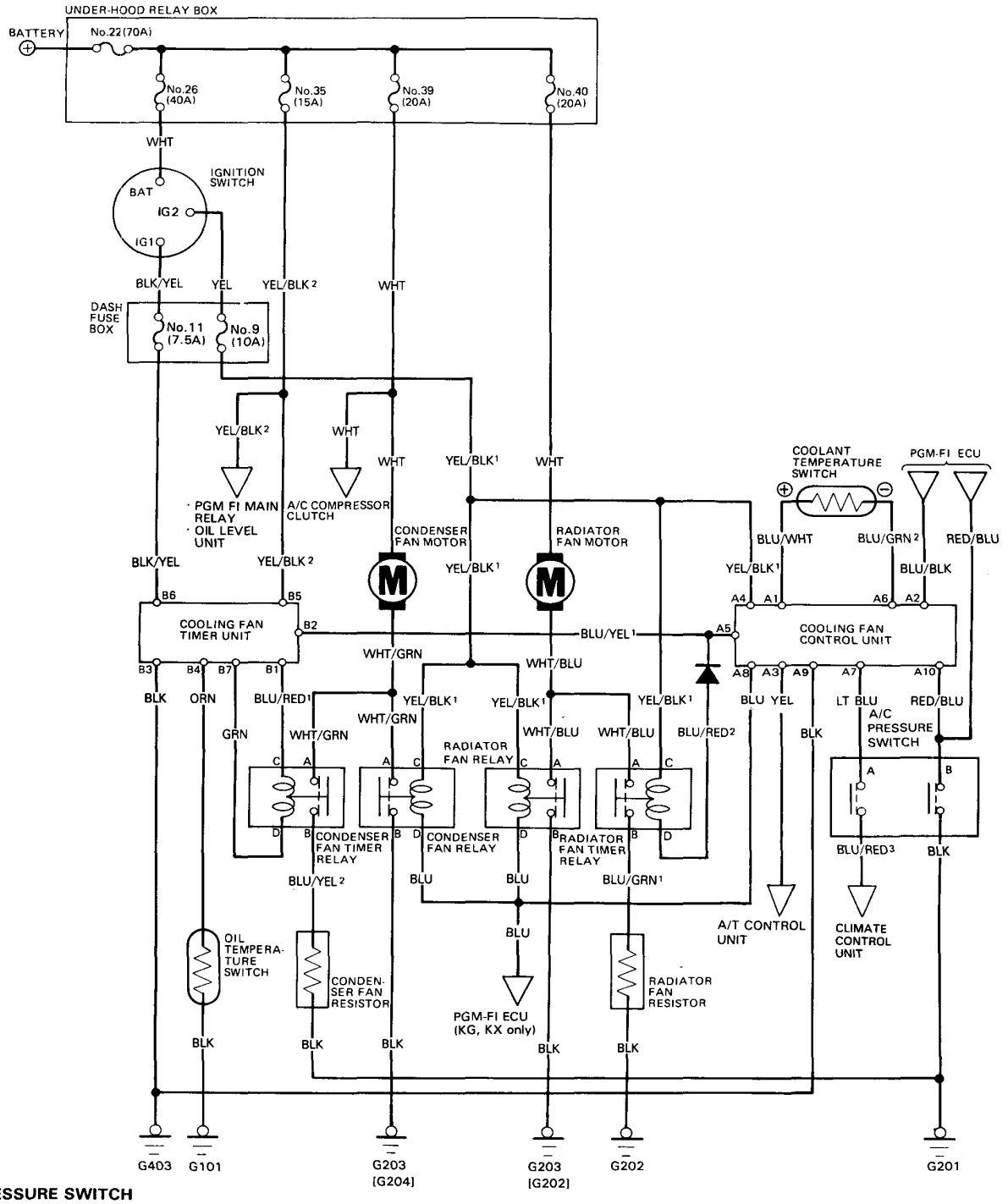

A/C PRESSURE SWITCH

A: ON between 210 kPa (2.1 kg/cm², 30 psi) and 2700 kPa (27 kg/cm², 384 psi)

B: ON below 1350 kPa (13.5 kg/cm², 192 psi)

[ ]: RHD

(Without A/C)

NOTE: Several different wires have the same color. They have been given a number suffix to distinguish them (for example BLU/GRN[1] and BLU/GRN[2] are not the same).

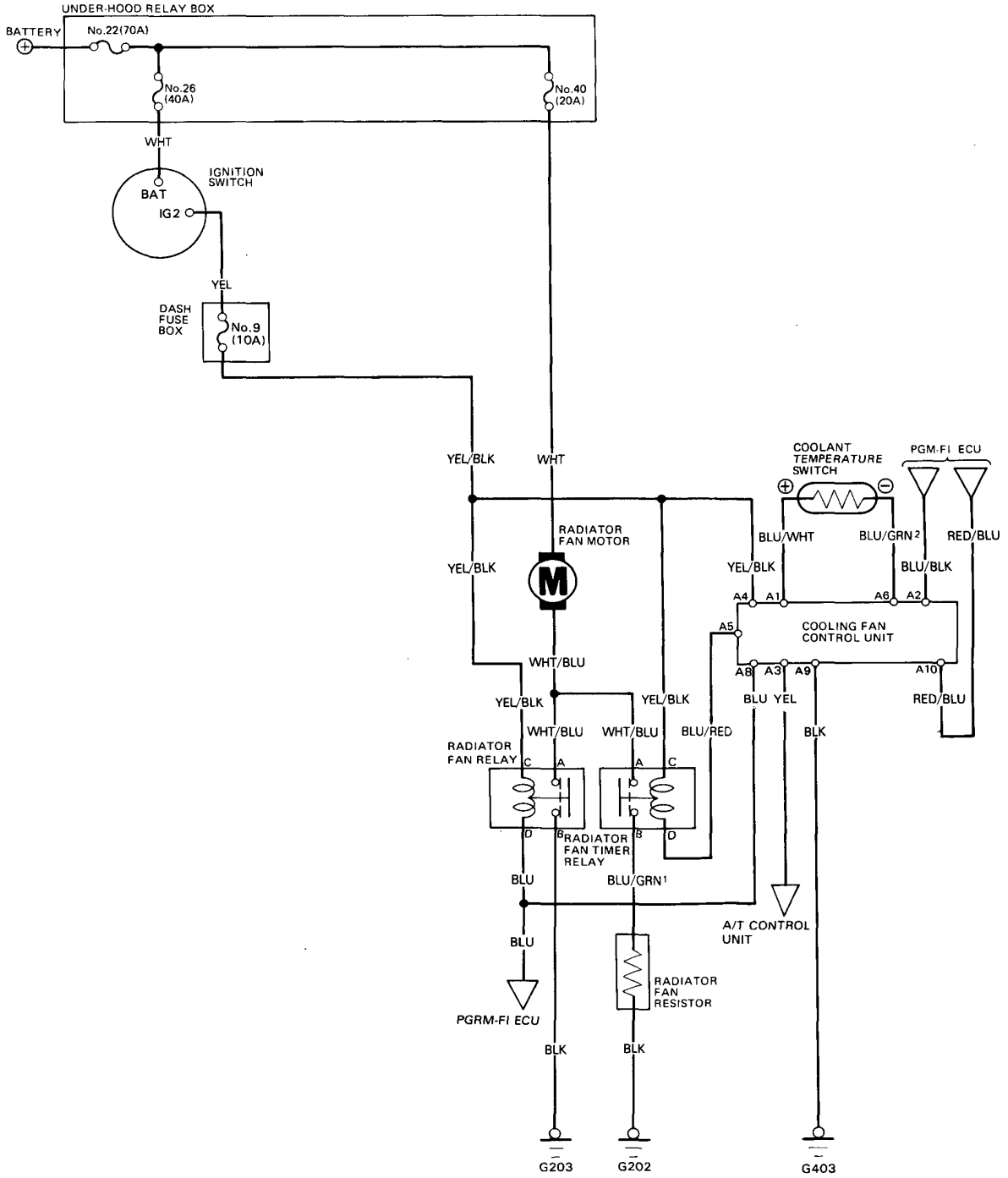

Cooling Fan Control

Troubleshooting

NOTE: The numbers in the table show the troubleshooting sequence.

With A/C:

Symptom \ Item to be inspected		Blown No. 39 (20 A) or No. 40 (20 A) fuse (in the under-hood relay box)	Radiator fan or condenser fan motor	Blown No. 9 (10A) fuse (in the dash fuse box)	Coolant temperature switch	Faulty fan control unit	Blown No. 35 (15 A) fuse (in the under-hood relay box)	Resistor	Relay	Faulty fan timer unit	A/C and PGM-FI systems	Blown No. 11 (7.5 A) fuse (in the dash fuse box)	Faulty A/C pressure switch or oil temperature switch	Poor ground	Open circuit in wires or loose or disconnected terminals
Only one fan operates (with engine and A/C ON).		1	2												WHT, WHT/GRN or WHT/BLU
Fans do not rotate.	Under all conditions.			1	2	3								G403	BLU/WHT, BLU/GRN[2] or YEL/BLK[1]
	At low speed.					4	2	3	1	5				G201,G202 or G403	BLU/YEL[1], BLU/YEL[2], BLU/RED[1], BLU/RED[2], YEL/BLK[1], YEL/BLK[2], BLU/GRN[1] or GRN
	At high speed.				2	3			1					G203 [G202 or 204]	YEL/BLK[1] or BLU
Compressor clutch does not engage as necessary.					2	3					1				LT BLU, BLU/RED[3] or BLU/BLK
Fan timer unit falls to function properly.										3		1	2	G101 or G201	ORN or RED/BLU

[ ]: RHD

Without A/C:

Fan does not rotate.	Under all conditions.			1	2	3								G403	WHT or WHT/BLU
	At low speepd.					3		2	1					G202	BLU/RED, YEL/BLK or BLU/GRN[1]
	At high speed.				2	3			1					G203	YEL/BLK or BLU

Control Unit Terminals

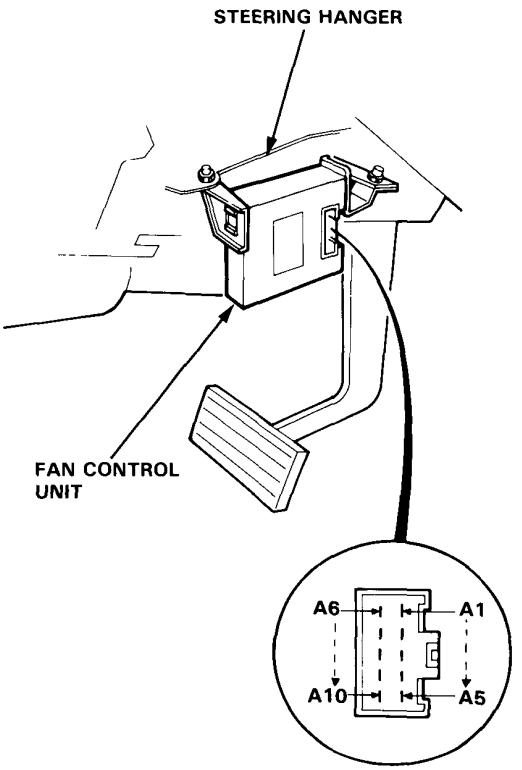

Terminal	Wire	Destination
A1	BLU/WHT	Coolant temperature switch ⊕
A2	BLU/BLK	A/C cut signal (To PGM-FI ECU)
A3	YEL	Lock-up control signal (To A/T control unit)
A4	YEL/BLK	IG2 (Main power supply)
A5	BLU/YEL [BLU/RED]	Condenser [and radiator] fan timer relays ⊖
A6	BLU/GRN	Coolant temperature switch ⊖
A7	LT BLU	A/C pressure switch A
A8	BLU	Radiator and condenser fan relays ⊖
A9	BLK	Ground
A10	RED/BLU	A/C pressure switch B

[ ]: LHD

Timer Unit Terminals

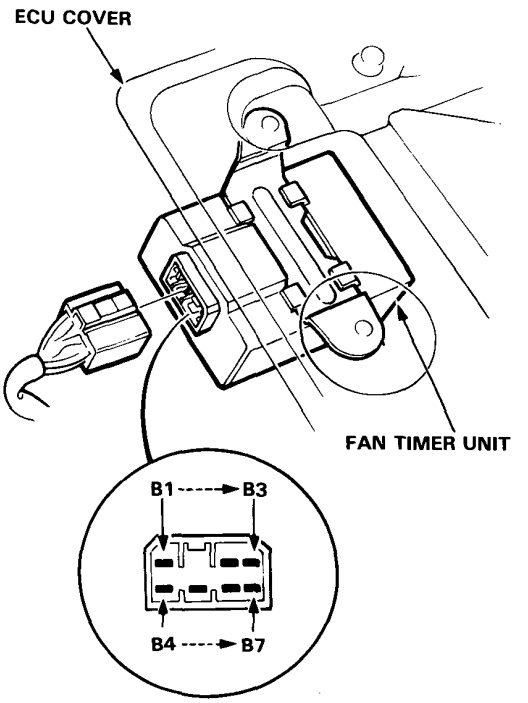

Terminal	Wire	Destination
B1	BLU/RED	Condenser fan timer relay ⊕
B2	BLU/YEL	Power supply (For condenser fan timer relay with ignition switch ON)
B3	BLK	Ground
B4	ORN	Oil temperature switch
B5	YEL/BLK	Power supply (For condenser fan timer relay with ignition switch OFF)
B6	BLK/YEL	IG1 (Timer reset signal)
B7	GRN	Condenser fan timer relay ⊖

Cooling Fan Control

Fan Motor Test

1. Disconnect the 2-P connector from the fan motor.
2. Test motor operation by connecting battery positive to the A terminal, and negative to the B terminal.
3. If the motor fails to run smoothly, replace it.

Radiator Fan Motor:

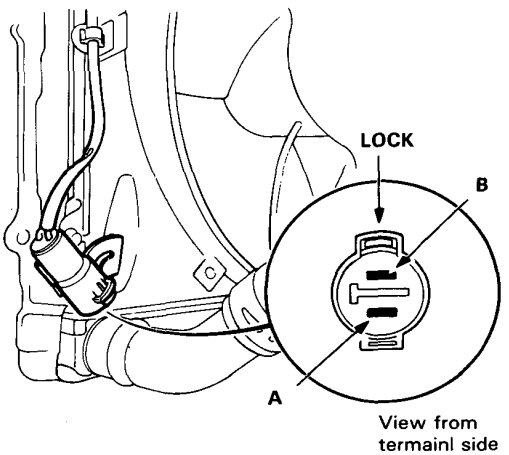

Condenser Fan Motor:

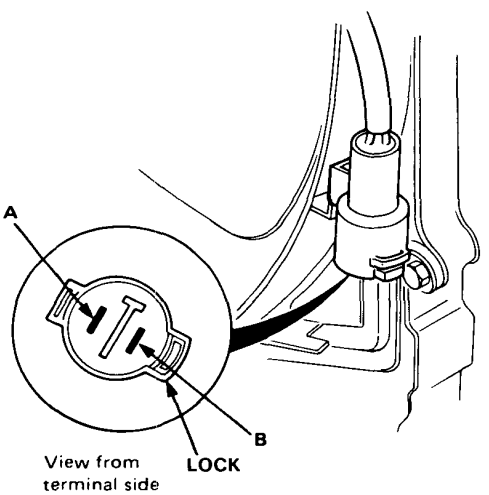

Resistor Test

1. Disconnect the 2-P connector from the resistor.
2. Using an ohmmeter, measure resistance between the A and B terminals. Replace the resistor if the resistance is not within specifications.

   NOTE: Resistance will vary with the resistor temperature; specifications are at 20°C (70°F).

Radiator Fan Resistor
Resistance: 0.9—1.1 ohms

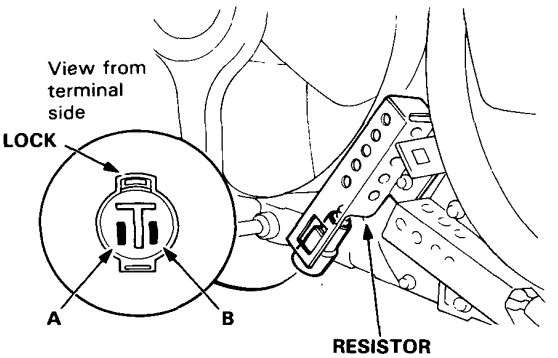

Condenser Fan Resistor
Resistance: 0.5—0.7 ohms

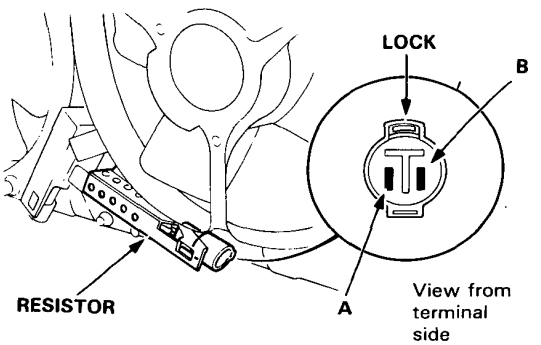

Coolant Temperature Switch Test

1. Remove the coolant temperature switch from the radiator.
2. Suspend the coolant temperature switch in a container of coolant as shown.

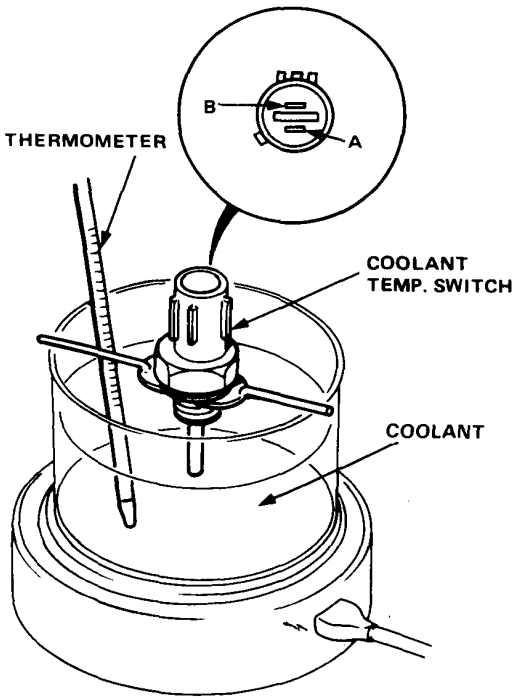

3. Heat the coolant and check coolant temperature with a thermometer (see table below).
4. Measure the resistance between the A and B terminals according to the table.

Temperature	84°C (183°F)	90°C (194°F)	108°C (226°F)	110°C (230°F)
Resistance (kΩ)	1.047–1.255	0.872–1.024	0.518–0.574	0.489–0.541

5. If unable to obtain the above readings, replace the temperature switch.

Oil Temperature Switch Test

1. Remove the oil temperature switch from the cylinder head.
2. Suspend the oil temperature switch in a container of coolant as shown.

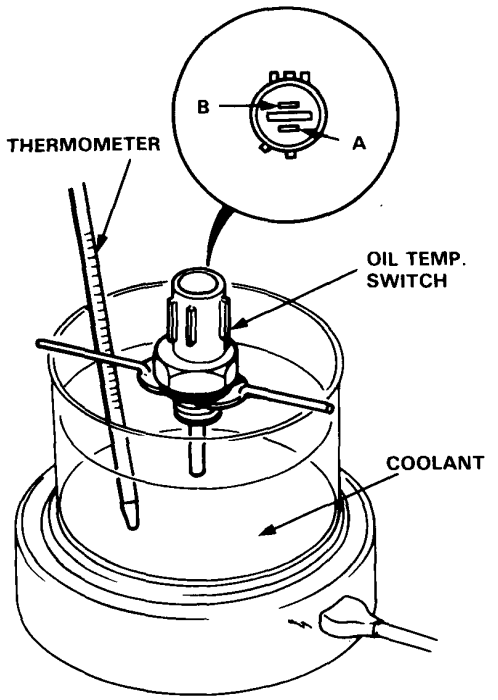

3. Heat the coolant and check coolant temperature with a thermometer (see table below).
4. Check for continuity between the A and B terminals according to the table.

Temperature \ Terminal		A	B
Above	101–109°C (214–228°F)	○	○
Below	80.5–95.5°C (177–204°F)		

Cooling Fan Control

Relay Test

There should be continuity between the A and B terminals when the battery is connected to the C and D terminals.
There should be no continuity when the battery is disconnected.

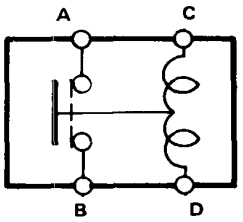

B-Type:

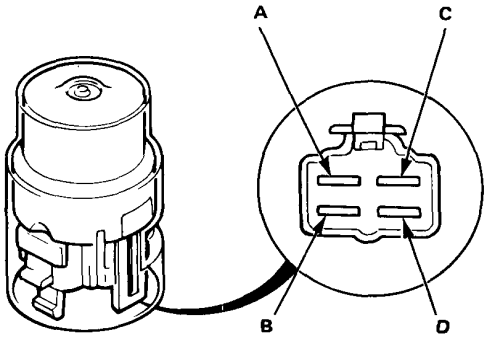

A-Type:

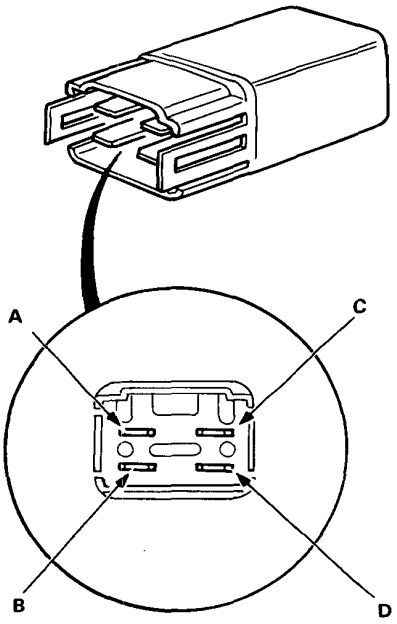

C-Type:

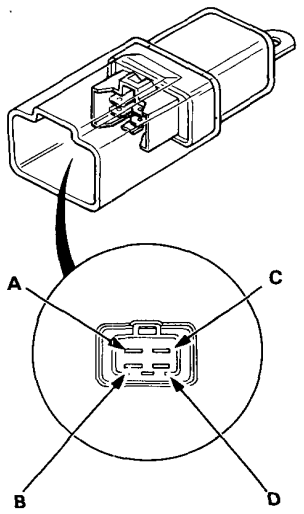

Gauge Assembly

Gauge/Indicator Location Index

GAUGE ASSEMBLY
Removal, page 16-79
Disassembly, page 16-80

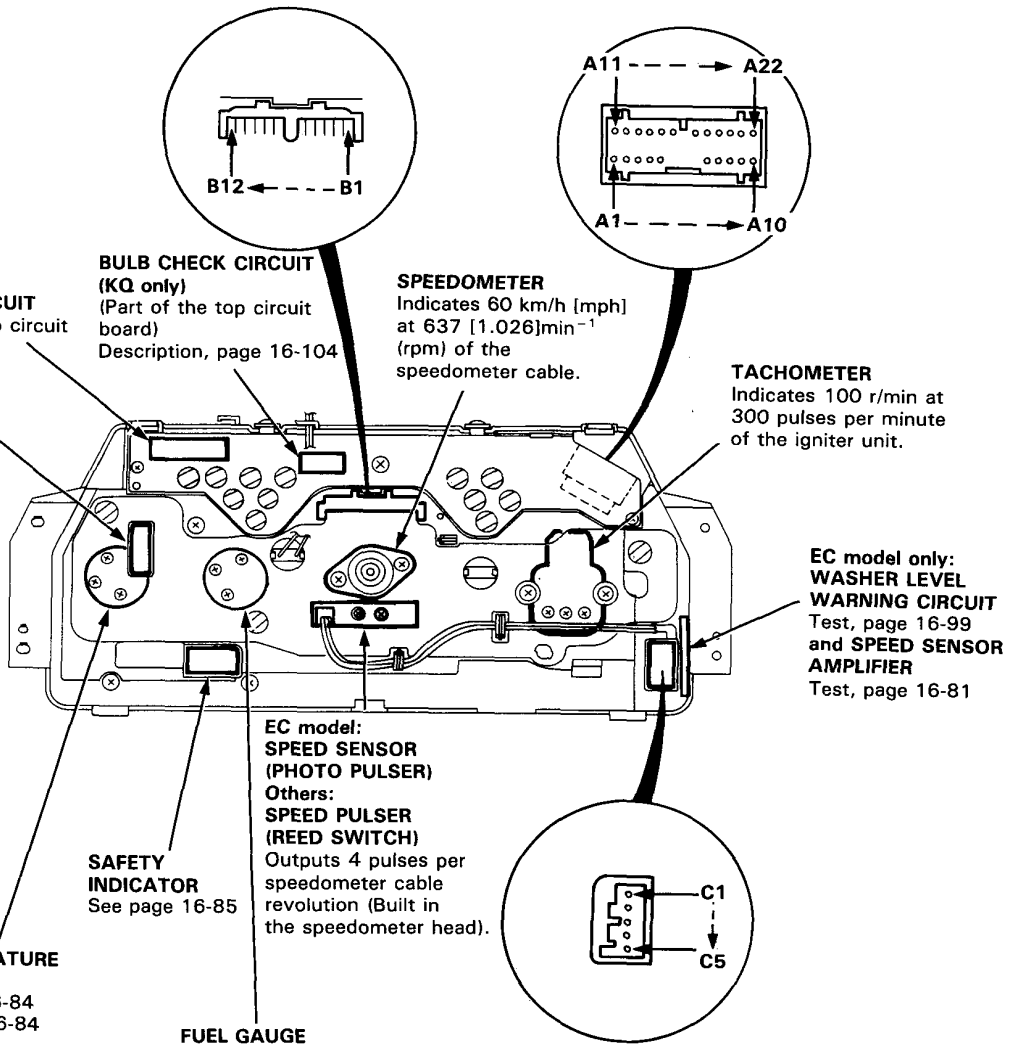

BULB CHECK CIRCUIT (KQ only)
(Part of the top circuit board)
Description, page 16-104

DIMMING CIRCUIT
(Part of the top circuit board)

SHIFT LEVER POSITION INDICATOR
See page 16-94

SPEEDOMETER
Indicates 60 km/h [mph] at 637 [1.026]min^{-1} (rpm) of the speedometer cable.

TACHOMETER
Indicates 100 r/min at 300 pulses per minute of the igniter unit.

EC model only: WASHER LEVEL WARNING CIRCUIT
Test, page 16-99
and SPEED SENSOR AMPLIFIER
Test, page 16-81

EC model: SPEED SENSOR (PHOTO PULSER)
Others: SPEED PULSER (REED SWITCH)
Outputs 4 pulses per speedometer cable revolution (Built in the speedometer head).

SAFETY INDICATOR
See page 16-85

COOLANT TEMPERATURE GAUGE
Gauge Test, page 16-84
Sender Test, page 16-84

FUEL GAUGE
Gauge Test, page 16-82
Sending Unit Test/Replacement, page 16-83

Gauge Assembly

Circuit Diagram

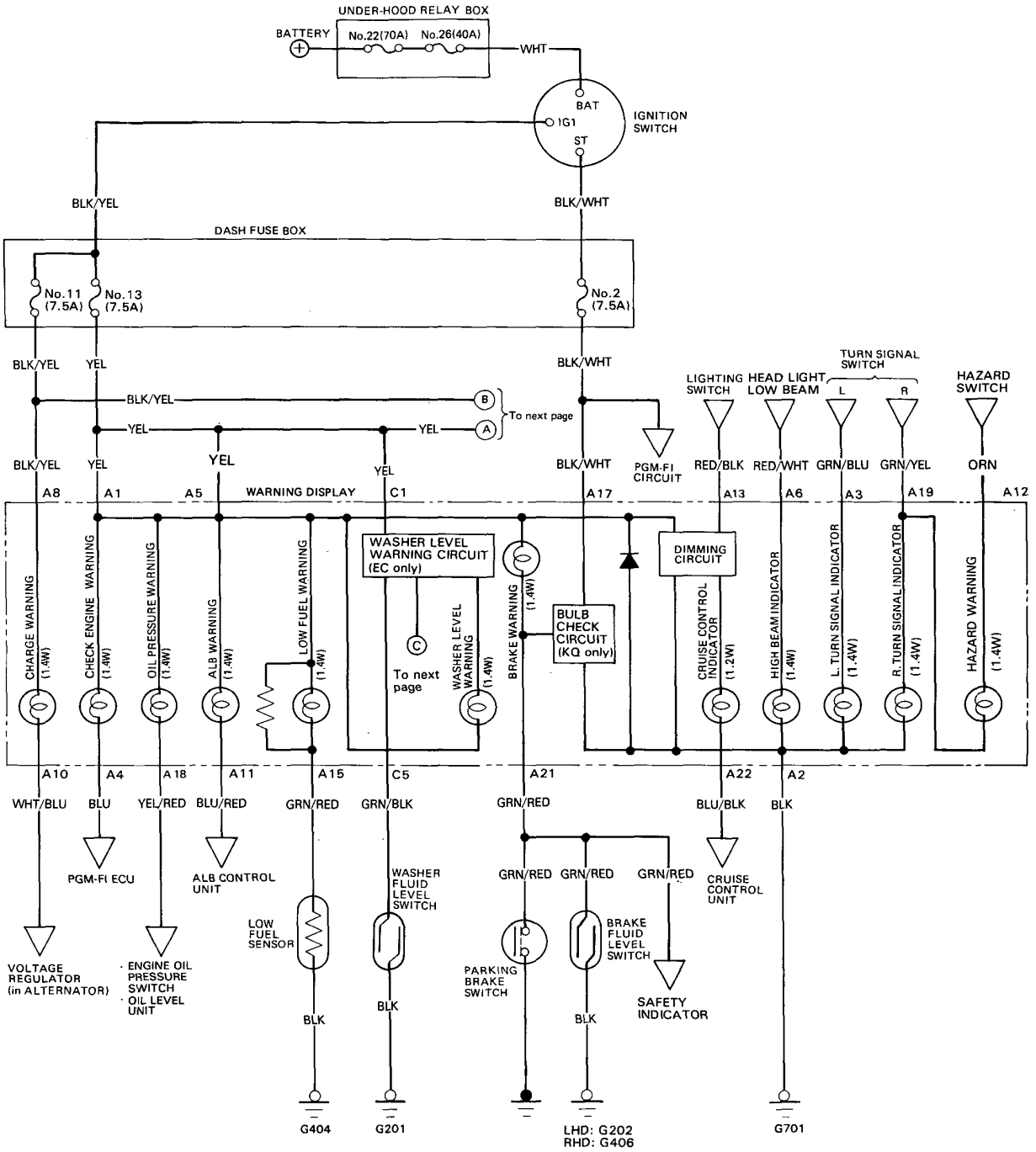

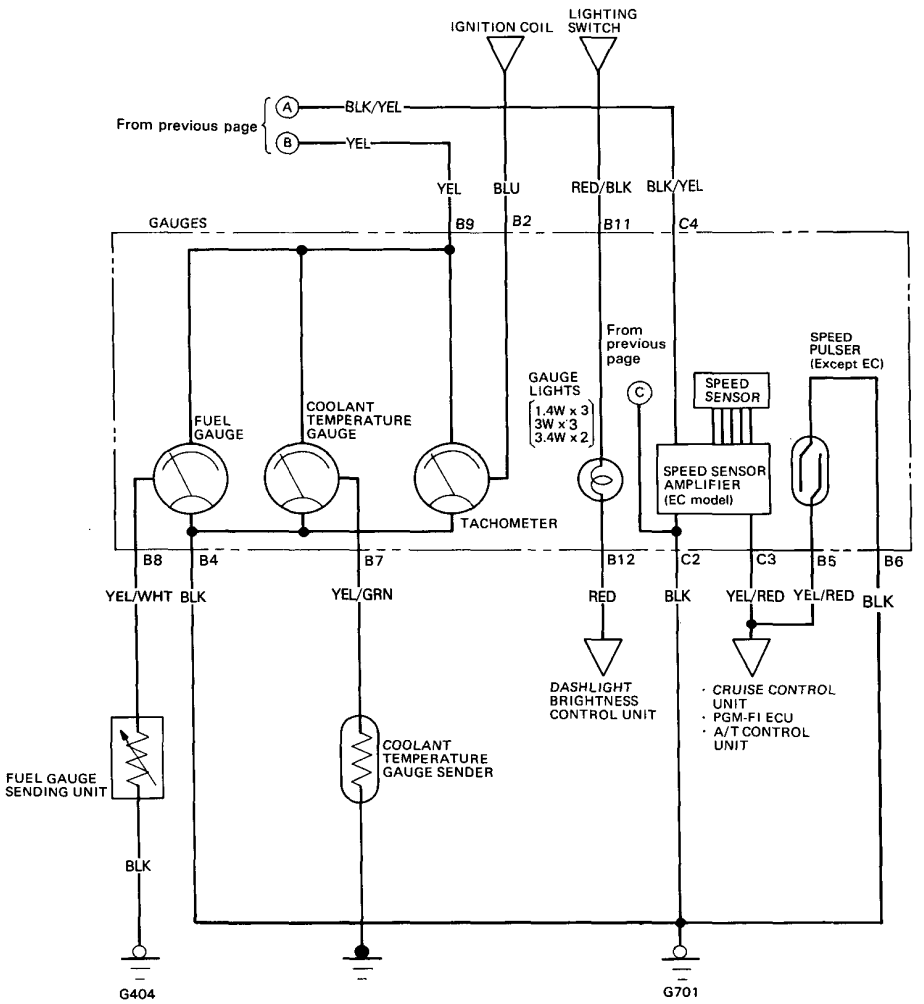
IGNITION COIL
LIGHTING SWITCH
From previous page
A
BLK/YEL
B
YEL
YEL
BLU
RED/BLK
BLK/YEL
GAUGES
B9
B2
B11
C4
From previous page
SPEED PULSER (Except EC)
GAUGE LIGHTS
1.4W x 3
3W x 3
3.4W x 2
C
SPEED SENSOR
FUEL GAUGE
COOLANT TEMPERATURE GAUGE
SPEED SENSOR AMPLIFIER (EC model)
TACHOMETER
B8
B4
B7
B12
C2
C3
B5
B6
YEL/WHT
BLK
YEL/GRN
RED
BLK
YEL/RED
YEL/RED
BLK
DASHLIGHT BRIGHTNESS CONTROL UNIT
· CRUISE CONTROL UNIT
· PGM-FI ECU
· A/T CONTROL UNIT
FUEL GAUGE SENDING UNIT
COOLANT TEMPERATURE GAUGE SENDER
BLK
G404
G701

Gauge Assembly

Bulb Locations

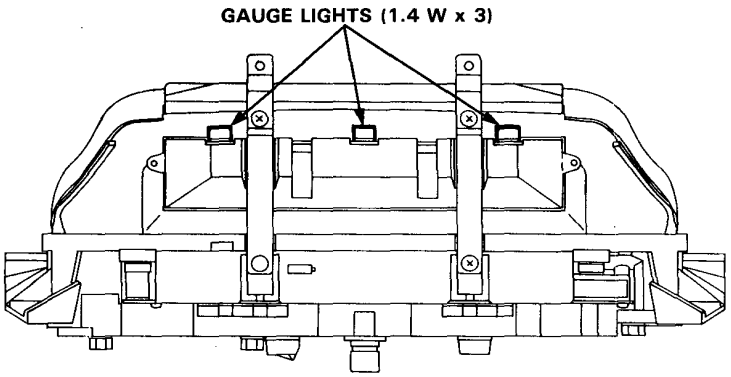

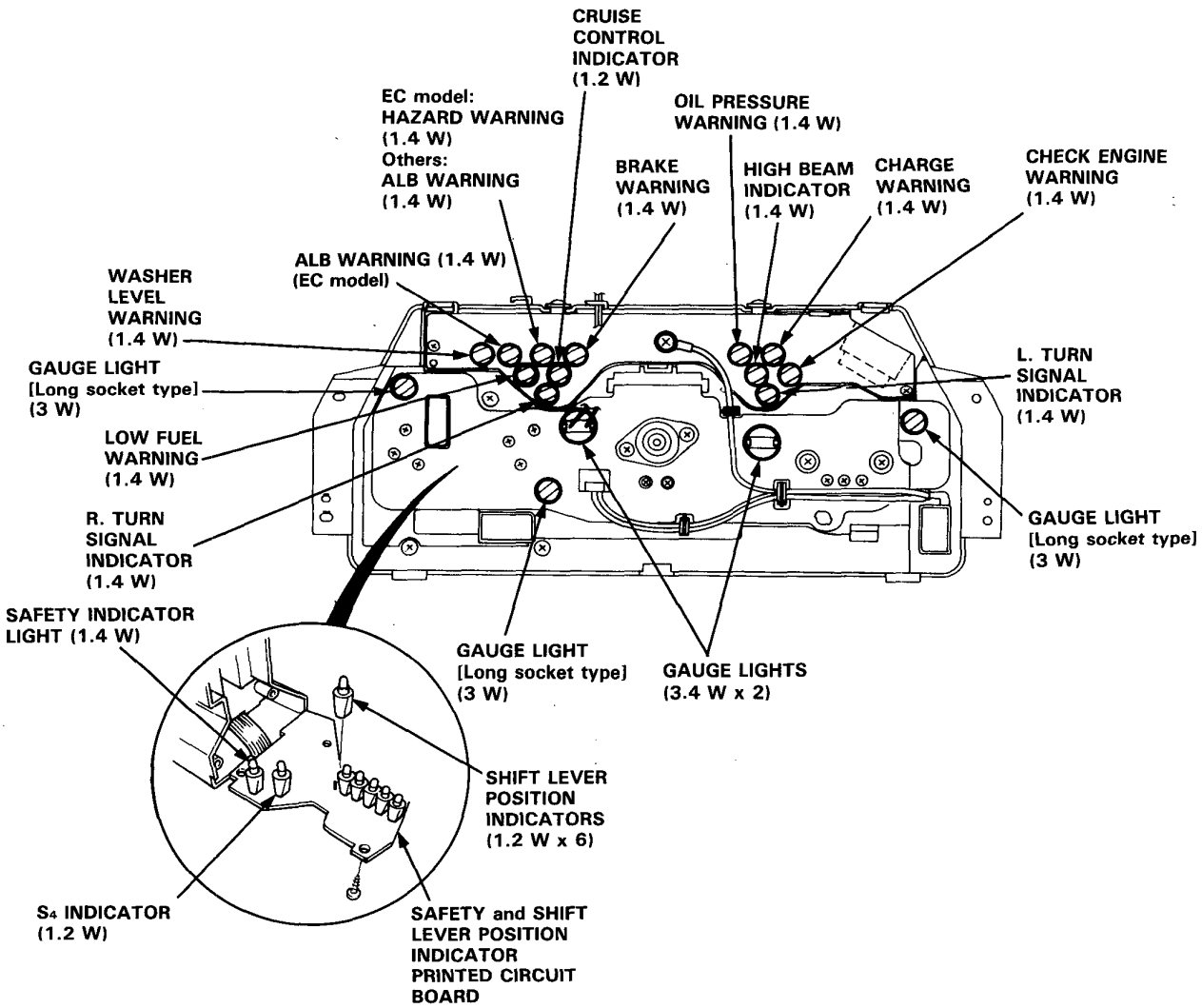

Removal

1. Remove the 4 screws, then remove the instrument panel from the dashboard.

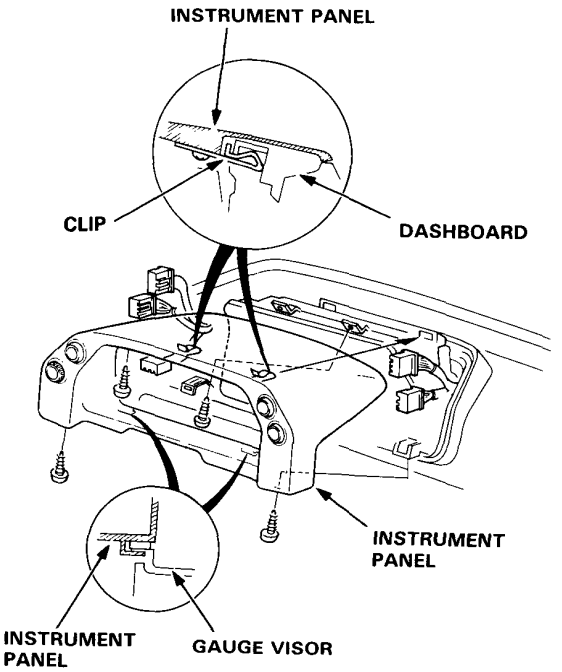

2. Remove the 4 screws, then pull the gauge assembly out half-way and disconnect the speedometer cable and connectors.

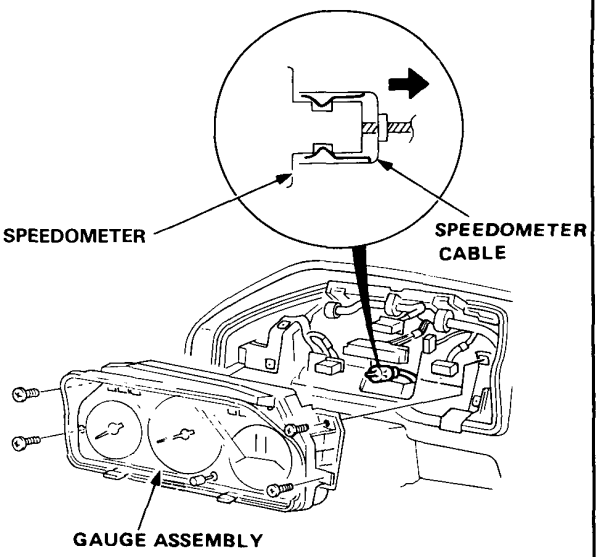

Gauge Assembly

Disassembly

NOTE: Handle the terminals and printed circuits carefully to avoid damaging them.

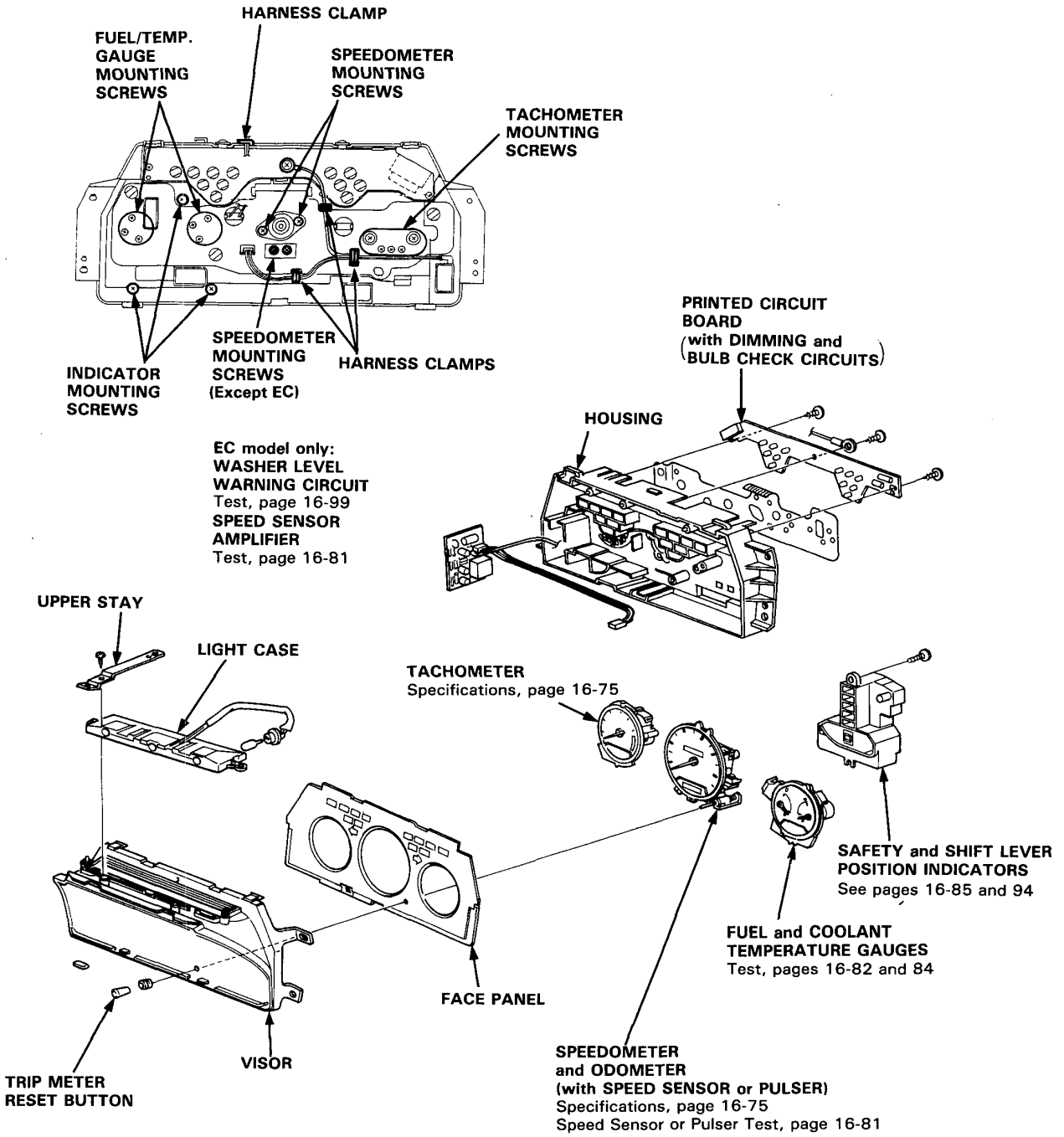

Speed Sensor Test

1. Remove the gauge assembly from the dashboard leaving the 5-P (LT BLU) connector connected to the speed sensor amplifier.

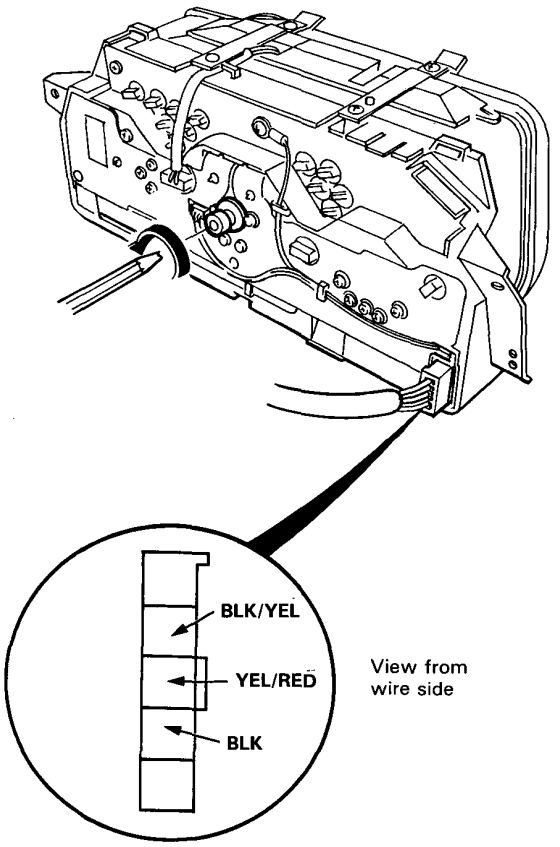

2. Check voltage between the BLK/YEL terminal and body ground with the ignition switch ON.
   There should be battery voltage.

3. Check for continuity between the BLK terminal and body ground.
   There should be continuity.

4. Connect the voltmeter positive probe to the BLK/YEL terminal and the negative probe to the YEL/RED terminal.

5. Break the lead off a pencil tip, then insert a pencil into the speedometer cable connector socket and turn it with the ignition switch ON. There should be 0-12-0-12 V repeatedly.

Speed Pulser Test

1. Remove the gauge assembly from the dashboard, then turn it over.

2. Break the lead off a pencil tip, then insert a pencil into the speedometer cable connector socket and turn it.
   There should be continuity 4 times between the ⊕ and ⊖ terminals per revolution.

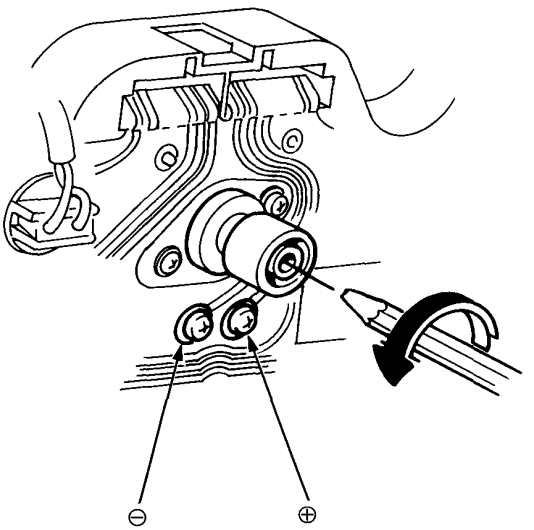

Gauge Test

NOTE: Refer to page 16-77 for wiring description of the fuel gauge circuit.

1. Remove the maintenance access cover in the luggage area.

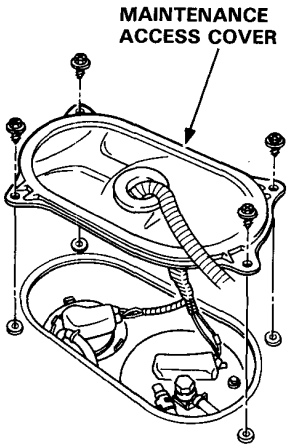

2. Disconnect the 3-P connector from the sending unit.

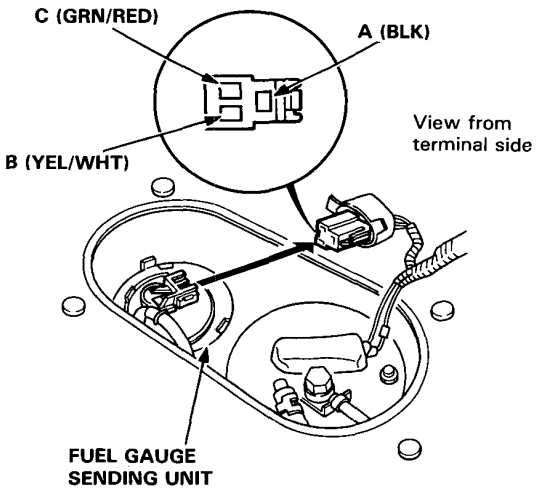

3. Connect the voltmeter positive probe to the B (YEL/WHT) terminal and the negative probe to the A (BLK) terminal, then turn the ignition switch ON. There should be battery voltage.

- If the voltage is specified, go to step 4.
- If the voltage is not specified, check for:
  - Blown No.13 (7.5 A) fuse in the dash fuse box.
  - An open in the YEL, YEL/WHT or BLK wire.
  - Poor ground (G404 or G701).

4. Turn the ignition switch OFF. Attach a jumper wire between the B (YEL/WHT) and A (BLK) terminals.

5. Turn the ignition switch ON.
   Check that the pointer of the fuel gauge starts moving toward "F" mark.

   CAUTION: Turn the ignition switch OFF before the pointer reaches "F" mark on the gauge dial. Failure to turn the ignition switch OFF before the pointer reaches the "F" mark may cause damage to the fuel gauge.

   NOTE: The fuel gauge is a bobbin (cross coil) type, hence the fuel level is continuously indicated even when the ignition switch is OFF, and the pointer moves more slowly than that of a bimetal type.

   - If the pointer of the fuel gauge does not swing at all, replace the gauge.
   - Inspect the fuel gauge sending unit if the gauge is OK.

Sending Unit Test/Replacement

WARNING Do not smoke while working on fuel system. Keep open flame away from work area.

1. Remove the maintenance access cover in the luggage area.
2. Check that the ignition switch is off, then disconnect the 3-P connector and the breather hose from the fuel gauge sending unit.
3. Remove the fuel gauge sending unit.

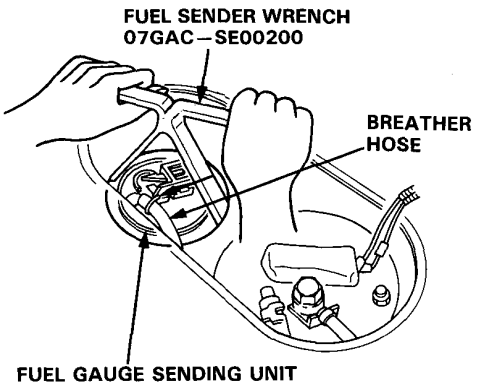

4. Measure the resistance between the A and B terminals at E (EMPTY), 1/2 (HALF FULL) and F (FULL) by moving the float.

Float Position	E	1/2	F
Resistance (Ω)	105–110	25.5–39.5	2–5

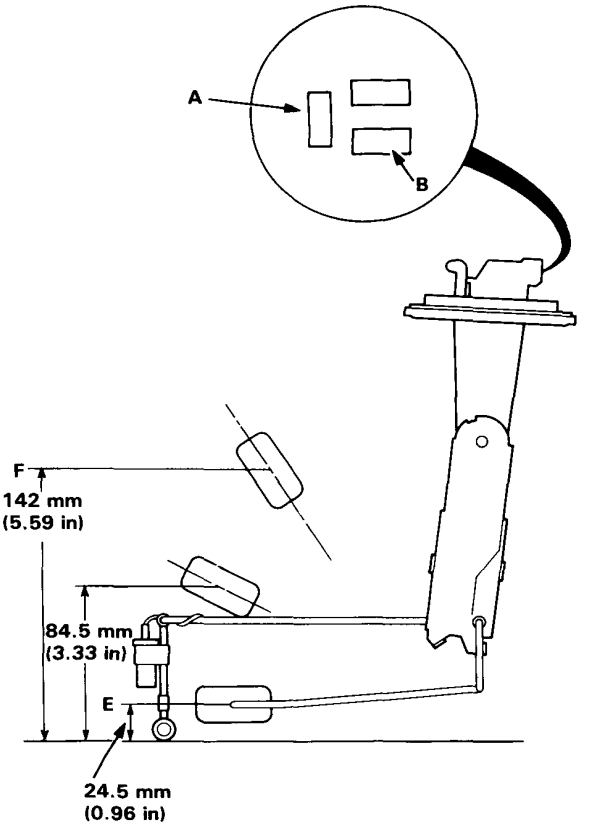

5. If unable to obtain the above readings, replace the fuel gauge sending unit.

Coolant Temperature Gauge

Gauge Test

NOTE: Refer to page 16-77 for wiring description of the coolant temperature gauge circuit.

1. Make sure the ignition switch is OFF, then disconnect the YEL/GRN wire from the coolant temperature gauge sender and ground it with a jumper wire.

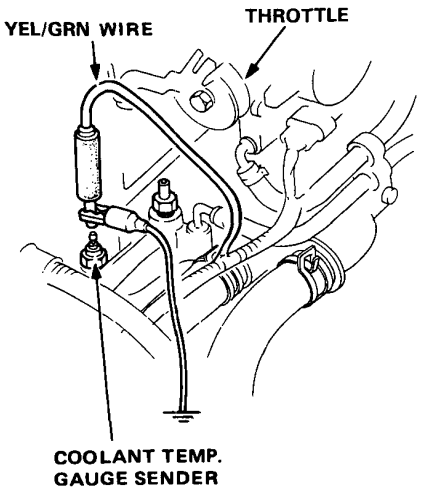

2. Turn the ignition switch ON.
   Check that the pointer of the coolant temperature gauge starts moving toward "H" mark.

   CAUTION: Turn the ignition switch OFF before the pointer reaches "H" mark on the gauge dial. Failure to turn the ignition OFF quickly enough may cause damage to the gauge.

   - If the pointer of the gauge does not swing at all, check for:
     - Blown No. 13 (7.5 A) fuse in the dash fuse box.
     - An open in the YEL or YEL/GRN wire.

     Replace the coolant temperature gauge if the fuse and wiring are normal.

   - Inspect the gauge sender if the gauge is OK.

Sender Test

1. Disconnect the YEL/GRN wire from the sender.
2. With the engine cold, use an ohmmeter to measure resistance between the positive terminal and the engine (ground).

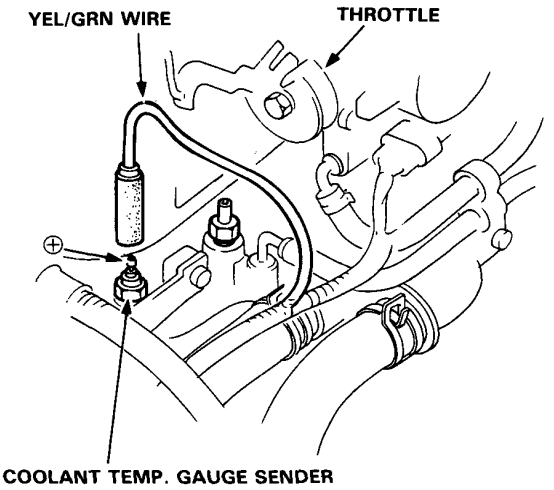

3. Check the temperature of the coolant.
4. Run the engine and measure the change in resistance with the engine at operting temperature (cooling fan comes on).

Temperature	54°C (129°F) ["C" mark]	85°C (185°F)–100°C (212°F)
Resistance (Ω)	158	32–49

5. If obtained readings are substantially different from specifications above, replace the gauge sender.

Safety Indicator

Component Location Index

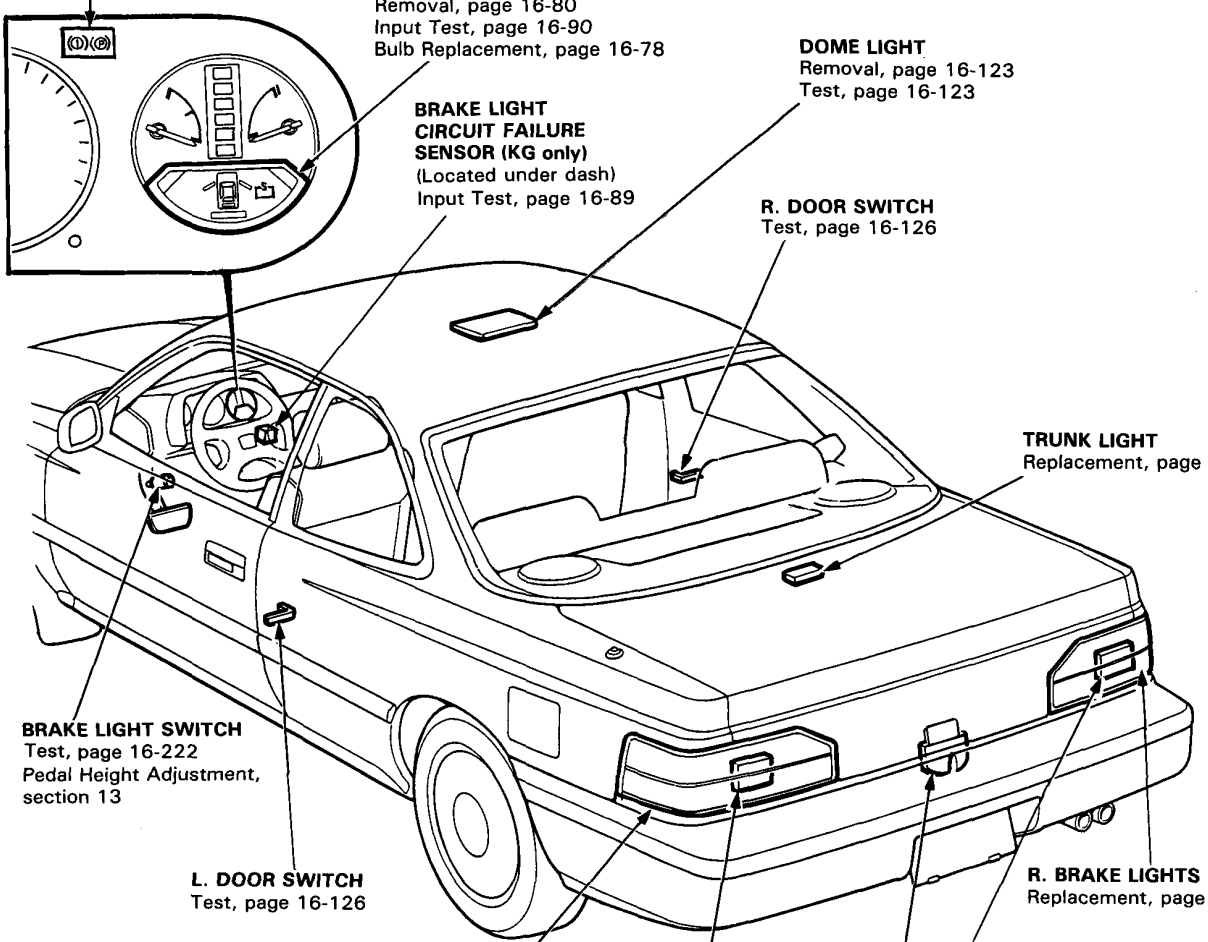

BRAKE WARNING LIGHT
(in the gauge assembly)
Gauge Assembly, page 16-76

SAFETY INDICATOR
Troubleshooting, page 16-88
Removal, page 16-80
Input Test, page 16-90
Bulb Replacement, page 16-78

BRAKE LIGHT CIRCUIT FAILURE SENSOR (KG only)
(Located under dash)
Input Test, page 16-89

DOME LIGHT
Removal, page 16-123
Test, page 16-123

R. DOOR SWITCH
Test, page 16-126

TRUNK LIGHT
Replacement, page 16-125

BRAKE LIGHT SWITCH
Test, page 16-222
Pedal Height Adjustment, section 13

L. DOOR SWITCH
Test, page 16-126

L. BRAKE LIGHTS
Replacement, page 16-121

L. BRAKE LIGHT FAILURE SENSOR
(in the left taillight)
Test, page 16-92

R. BRAKE LIGHTS
Replacement, page 16-121

R. BRAKE LIGHT FAILURE SENSOR
(in the right taillight)
Test, page 16-92

TRUNK LATCH SWITCH
Test/Replacement, page 16-125

Safety Indicator

Circuit Diagram

NOTE: Several different wires have the same color. They have been given a number suffix to distinguish them (for example WHT/GRN[1] and WHT/GRN[2] are not the same).

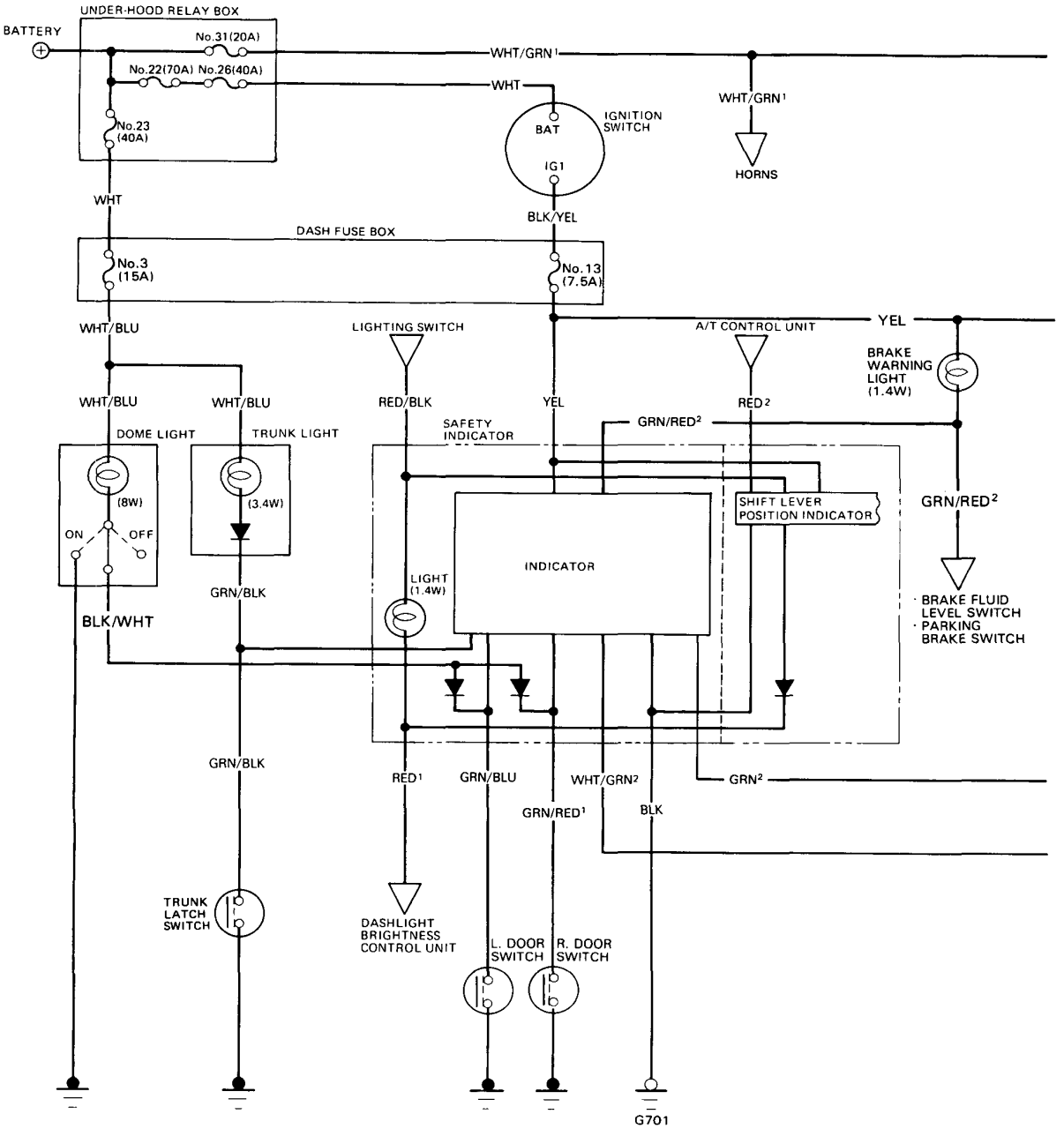

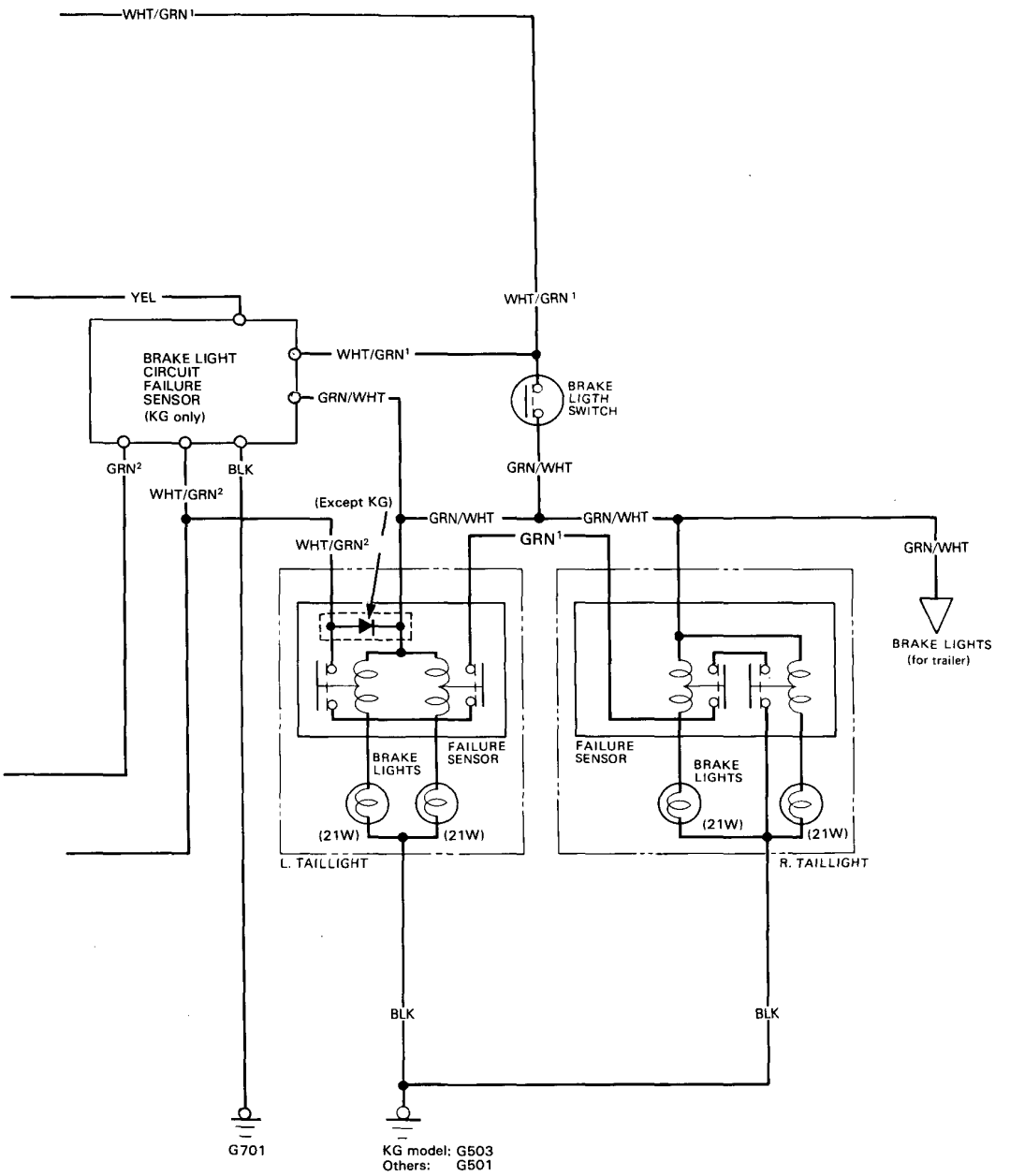
WHT/GRN 1
YEL
BRAKE LIGHT CIRCUIT FAILURE SENSOR (KG only)
WHT/GRN1
GRN/WHT
WHT/GRN 1
BRAKE LIGTH SWITCH
GRN2
BLK
WHT/GRN2
(Except KG)
GRN/WHT
GRN/WHT
WHT/GRN2
GRN1
GRN/WHT
BRAKE LIGHTS (for trailer)
BRAKE LIGHTS
FAILURE SENSOR
(21W)
(21W)
L. TAILLIGHT
FAILURE SENSOR
BRAKE LIGHTS
(21W)
(21W)
R. TAILLIGHT
BLK
BLK
G701
KG model: G503
Others: G501

Safety Indicator

Troubleshooting

NOTE: The numbers in the table show the troubleshooting sequence.

Symptom \ Items to be inspected	Brown No. 13 (7.5 A) fuse (in the desh fuse box)	Blown bulb	Door switch	Blown No. 3 (15 A) fuse (in the dash fuse box)	Trunk latch switch	Brake light failure sensor	Safety indicator (diodes)	Safety indicator input	Brake light circuit failure sensor	Poor ground	Open circuit in wires or loose or disconnected terminals
No indicators operate.	1							2		G701	YEL
Indicator panel illumination not lit with lighting switch ON.		1									RED/BLK or RED
Warning lights fail to come on when ignition switch is turned to ON.								1			
Door warning lights not lit with doors opened.			1					2			GRN/BLU or GRN/RED
Trunk warning light not lit with trunk lid opened.				1	2			3			GRN/BLK
Brake light warning light not lit with blown brake light bulb.								1	[2]		WHT/GRN[2] or GRN[1]
Brake light warning light remains on with good brake light bulbs.						1		2	[3]	G501 (G503 or G701)	(WHT/GRN[1], GRN/WHT[1] or GRN[2])
Dome light not operated with door opened. (When switch position is in MIDDLE)							1				BLK/WHT

[ ]: KG model only

Brake Light Circuit Failure Sensor Test

Remove the dashboard lower panel and disconnect the 6-P connector from the circuit failure sensor.
Make the following input tests at the harness pins.

NOTE:

- Several different wires have the same color. They have been given a number suffix to distinguish them (for example WHT/GRN[1] and WHT/GRN[2] are not the same).
- Recheck the connections between the 6-P connector and the sensor, then replace the sensor if all input tests prove OK.

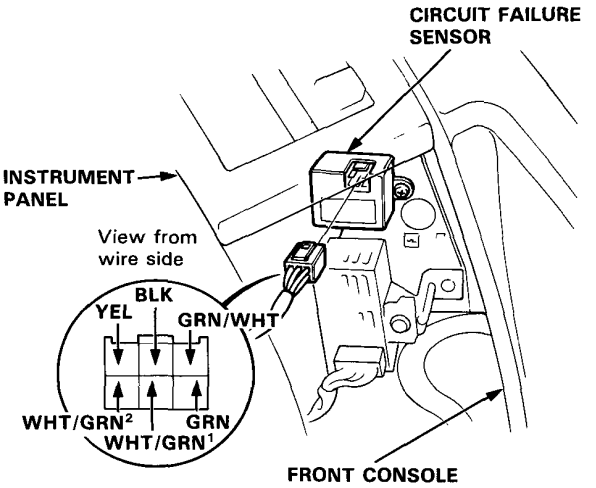

No.	Wire	Test condition	Test: desired result	Possible cause (if result is not obtained)
1	BLK	Under all conditions.	Check for continuity to ground: should be continuity.	• Poor ground (G701) • An open in the wire.
2	YEL	Ignition switch ON.	Check for voltage to ground: should be battery voltage.	• Blown No.13 (7.5 A) fuse. • An open in the wire.
3	WHT/GRN[1]	Under all conditions.	Check for voltage to ground: should be battery voltage.	• Blown No.31 (20 A) fuse. • An open in the wire.
4	GRN/WHT	Brake pedal pushed, then released.	Check for voltage to ground: should be battery voltage with the pedal pushed and 0V with the pedal released.	• Faulty brake light switch. • An open in the wire.
5	WHT/GRN[2]	Ignition switch ON and brake pedal released, then brake pedal pushed.	Check for voltage to ground: should be 7 V or more with the pedal released, and 3 V or less with the pedal pushed.	• Poor ground (G503). • Blown brake light bulb. • Faulty brake light failure sensor. • Faulty safety indicator. • An open in the wire.
6	GRN	Ignition switch ON.	Attach to ground: Brake light warning light in the safety indicator should come on.	• Faulty safety indicator. • An open in the wire.

Safety Indicator

Indicator Input Test

Remove the gauge assembly from the dashboard to disconnect the 16-P connector from the indicator.
Make the following input tests at the harness pins.
If all tests prove OK, yet the indicator still fails to work, replace the indicator assembly.

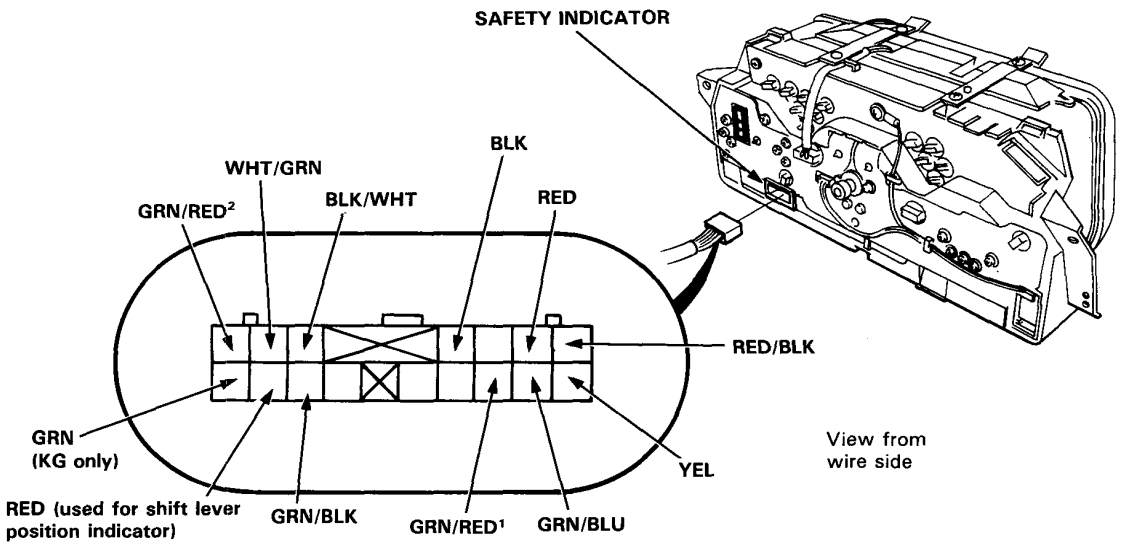

No.	Wire	Test condition	Test: desired result	Possible cause (if result is not obtained)
1	BLK	Under all conditions.	Check for continuity to ground: should be continuity.	• Poor ground (G701). • An open in the wire.
2	YEL	Ignition switch ON.	Check for voltage to ground: should be battery voltage.	• Blown No. 13 (7.5A) fuse. • An open in the wire.
3	WHT/GRN	Brake pedal pushed.	Check for continuity to ground: should be continuity with the pedal pushed.	• Blown No. 31 (20A) fuse. • Faulty brake light switch. • Blown brake light bulbs. • Faulty brake light failure sensors. • Poor ground. (KG model: G503, Others: G501) • An open in the WHT/GRN or GRN/WHT wire.
4	GRN/BLK	Trunk lid opened.	Check for continuity to ground: should be continuity. NOTE: Before testing, remove No. 3 (15A) fuse.	• Faulty trunk latch switch. • An open in the wire.
5	RED/BLK and RED	Light switch ON and dashlight brightness control dial in full bright.	Check for voltage between RED/BLK (+) and RED (−) terminals: should be battery voltage.	• Faulty dashlight brightness control system. • An open in the wire.
6	GRN/BLU	Left door opened.	Check for continuity to ground: should be continuity. NOTE: Before testing, remove No. 3 (15A) fuse.	• Faulty door switch. • An open in the wire.
	GRN/RED[1]	Right door opened.		
7	BLK/WHT	Dome light switch in MIDDLE position.	Attach to ground: Dome light should come on.	• Blown No. 3 (15A) fuse. • Faulty dome light. • An open in the WHT/BLU or BLK/WHT wire.
8	GRN/RED[2]	Ignition switch ON.	Attach to ground: Brake warning light in the gauge assembly should come on.	• Blown bulb. • An open in the wire.

KG model only:

9	GRN	With brake pedal released, ignition switch OFF to ON.	Check for voltage between YEL (+) and GRN (−) terminals: should be battery voltage as the ignition switch is turned ON, then 0V with the brake pedal pushed.	• Faulty brake light circuit failure sensor.

Safety Indicator

Circuit Diagram

NOTE: Several different wires have the same color. They have been given a number suffix to distinguish them (for example WHT/GRN[1] and WHT/GRN[2] are not the same).

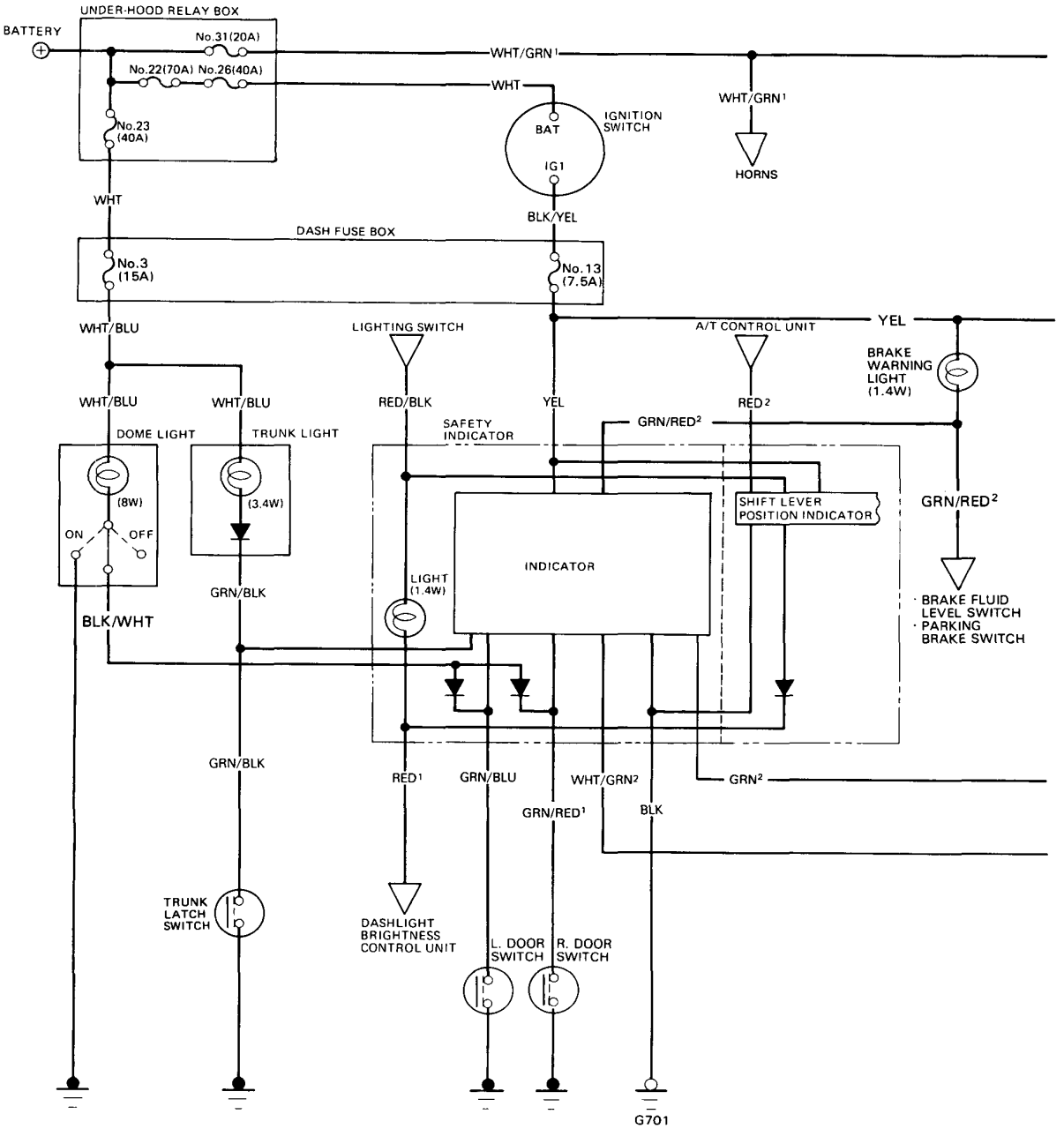

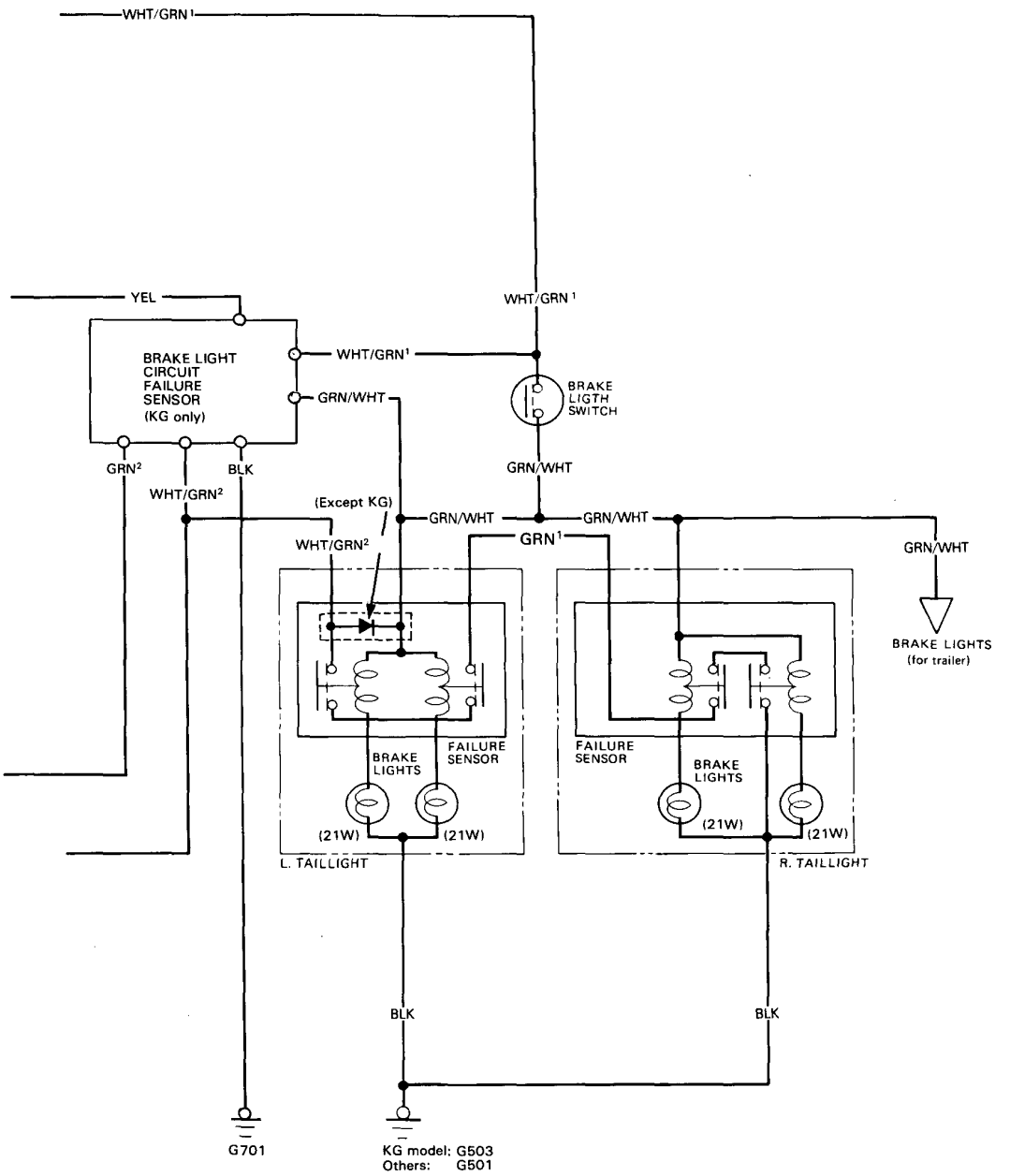
WHT/GRN 1
YEL
BRAKE LIGHT CIRCUIT FAILURE SENSOR (KG only)
WHT/GRN1
GRN/WHT
WHT/GRN 1
BRAKE LIGTH SWITCH
GRN2
BLK
WHT/GRN2
(Except KG)
GRN/WHT
GRN/WHT
WHT/GRN2
GRN1
GRN/WHT
BRAKE LIGHTS (for trailer)
BRAKE LIGHTS
FAILURE SENSOR
(21W)
(21W)
L. TAILLIGHT
FAILURE SENSOR
BRAKE LIGHTS
(21W)
(21W)
R. TAILLIGHT
BLK
BLK
G701
KG model: G503
Others: G501

Safety Indicator

Troubleshooting

NOTE: The numbers in the table show the troubleshooting sequence.

Symptom \ Items to be inspected	Brown No. 13 (7.5 A) fuse (in the desh fuse box)	Blown bulb	Door switch	Blown No. 3 (15 A) fuse (in the dash fuse box)	Trunk latch switch	Brake light failure sensor	Safety indicator (diodes)	Safety indicator input	Brake light circuit failure sensor	Poor ground	Open circuit in wires or loose or disconnected terminals
No indicators operate.	1							2		G701	YEL
Indicator panel illumination not lit with lighting switch ON.		1									RED/BLK or RED
Warning lights fail to come on when ignition switch is turned to ON.								1			
Door warning lights not lit with doors opened.			1					2			GRN/BLU or GRN/RED
Trunk warning light not lit with trunk lid opened.				1	2			3			GRN/BLK
Brake light warning light not lit with blown brake light bulb.								1	[2]		WHT/GRN[2] or GRN[1]
Brake light warning light remains on with good brake light bulbs.						1		2	[3]	G501 (G503 or G701)	(WHT/GRN[1], GRN/WHT[1] or GRN[2])
Dome light not operated with door opened. (When switch position is in MIDDLE)							1				BLK/WHT

[ ]: KG model only

Brake Light Circuit Failure Sensor Test

Remove the dashboard lower panel and disconnect the 6-P connector from the circuit failure sensor.
Make the following input tests at the harness pins.

NOTE:

- Several different wires have the same color. They have been given a number suffix to distinguish them (for example WHT/GRN[1] and WHT/GRN[2] are not the same).
- Recheck the connections between the 6-P connector and the sensor, then replace the sensor if all input tests prove OK.

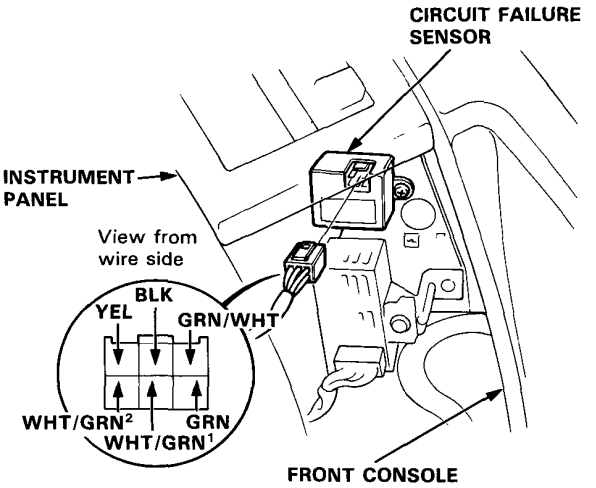

No.	Wire	Test condition	Test: desired result	Possible cause (if result is not obtained)
1	BLK	Under all conditions.	Check for continuity to ground: should be continuity.	• Poor ground (G701) • An open in the wire.
2	YEL	Ignition switch ON.	Check for voltage to ground: should be battery voltage.	• Blown No.13 (7.5 A) fuse. • An open in the wire.
3	WHT/GRN[1]	Under all conditions.	Check for voltage to ground: should be battery voltage.	• Blown No.31 (20 A) fuse. • An open in the wire.
4	GRN/WHT	Brake pedal pushed, then released.	Check for voltage to ground: should be battery voltage with the pedal pushed and 0V with the pedal released.	• Faulty brake light switch. • An open in the wire.
5	WHT/GRN[2]	Ignition switch ON and brake pedal released, then brake pedal pushed.	Check for voltage to ground: should be 7 V or more with the pedal released, and 3 V or less with the pedal pushed.	• Poor ground (G503). • Blown brake light bulb. • Faulty brake light failure sensor. • Faulty safety indicator. • An open in the wire.
6	GRN	Ignition switch ON.	Attach to ground: Brake light warning light in the safety indicator should come on.	• Faulty safety indicator. • An open in the wire.

Safety Indicator

Indicator Input Test

Remove the gauge assembly from the dashboard to disconnect the 16-P connector from the indicator.
Make the following input tests at the harness pins.
If all tests prove OK, yet the indicator still fails to work, replace the indicator assembly.

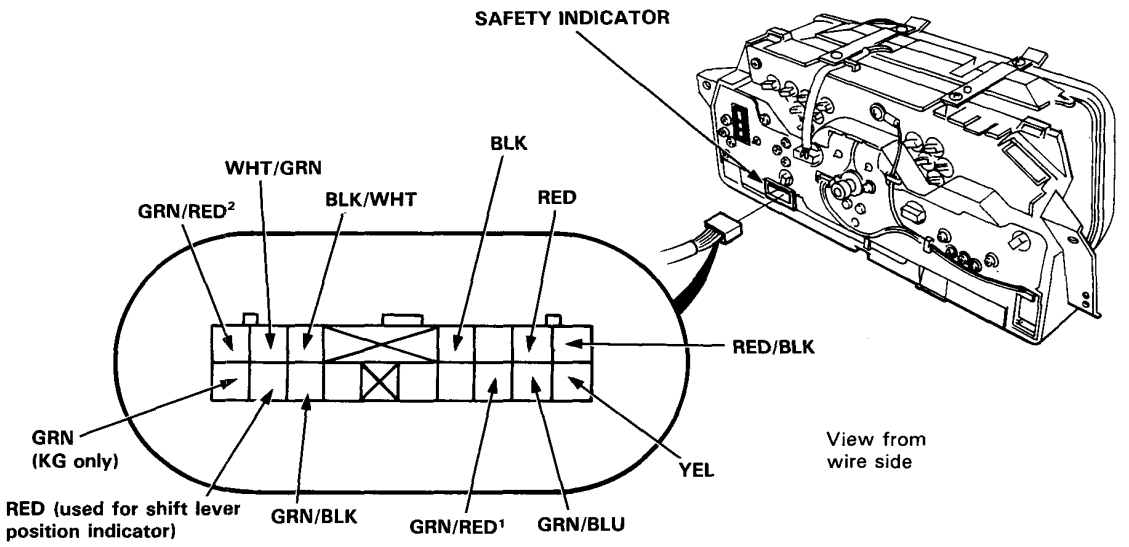

No.	Wire	Test condition	Test: desired result	Possible cause (if result is not obtained)
1	BLK	Under all conditions.	Check for continuity to ground: should be continuity.	• Poor ground (G701). • An open in the wire.
2	YEL	Ignition switch ON.	Check for voltage to ground: should be battery voltage.	• Blown No. 13 (7.5A) fuse. • An open in the wire.
3	WHT/GRN	Brake pedal pushed.	Check for continuity to ground: should be continuity with the pedal pushed.	• Blown No. 31 (20A) fuse. • Faulty brake light switch. • Blown brake light bulbs. • Faulty brake light failure sensors. • Poor ground. (KG model: G503, Others: G501) • An open in the WHT/GRN or GRN/WHT wire.
4	GRN/BLK	Trunk lid opened.	Check for continuity to ground: should be continuity. NOTE: Before testing, remove No. 3 (15A) fuse.	• Faulty trunk latch switch. • An open in the wire.
5	RED/BLK and RED	Light switch ON and dashlight brightness control dial in full bright.	Check for voltage between RED/BLK (+) and RED (−) terminals: should be battery voltage.	• Faulty dashlight brightness control system. • An open in the wire.
6	GRN/BLU	Left door opened.	Check for continuity to ground: should be continuity. NOTE: Before testing, remove No. 3 (15A) fuse.	• Faulty door switch. • An open in the wire.
	GRN/RED[1]	Right door opened.		
7	BLK/WHT	Dome light switch in MIDDLE position.	Attach to ground: Dome light should come on.	• Blown No. 3 (15A) fuse. • Faulty dome light. • An open in the WHT/BLU or BLK/WHT wire.
8	GRN/RED[2]	Ignition switch ON.	Attach to ground: Brake warning light in the gauge assembly should come on.	• Blown bulb. • An open in the wire.

KG model only:

9	GRN	With brake pedal released, ignition switch OFF to ON.	Check for voltage between YEL (+) and GRN (−) terminals: should be battery voltage as the ignition switch is turned ON, then 0V with the brake pedal pushed.	• Faulty brake light circuit failure sensor.

Safety Indicator

Brake Light Failure Sensor Test

1. First make sure the brake lights come on when the brake pedal is pressed.

   - If none of the brake lights come on, check the brake light circuit (see page 16-119).

   - If one of the brake lights does not comes on, check whether the bulb is blown. If the bulb is OK, go to step 2.

   - If all the brake lights come on, go to step 2.

2. Open the trunk lid and the maintenance lid of the left taillight. Make sure the BRAKE LAMP of the safety indicator does not come on when the No. 1 terminal of the 6-P connector is grounded and the ignition switch is turned OFF to ON.

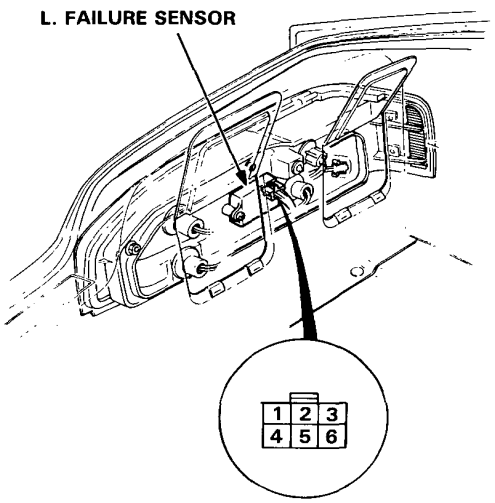

View from wire side

   - If the BRAKE LAMP comes on, check for an open in the No. 1 wire between the safety indicator and the left failure sensor and whether the safety indicator has a problem.

   - If the BRAKE LAMP does not come on, go to step 3.

3. Make sure the BRAKE LAMP does not come on when the ignition switch is turned OFF to ON with the No.3 terminal of the 6-P connector grounded and the brake peal pressed.

   - If the BRAKE LAMP comes on, replace the left failure sensor.

   - If the BRAKE LAMP does not come on, go to step 4.

4. Open the maintenance lid of the right taillight. Make sure the BRAKE LAMP does not come on when the ignition switch is turned OFF to ON with the No.7 terminal of the 6-P connector grounded and the brake pedal pressed.

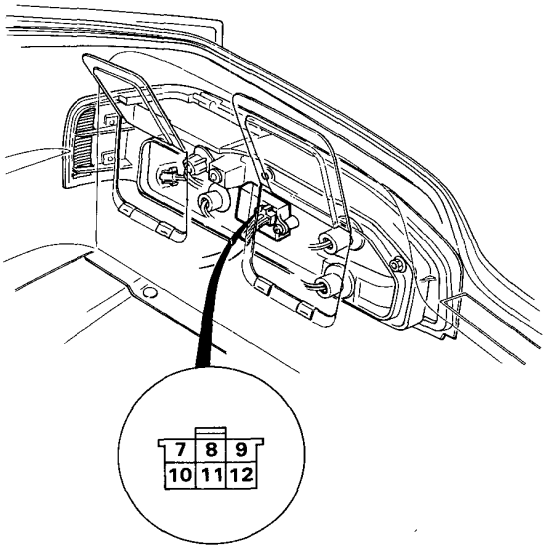

View from wire side

   - If the BRAKE LAMP comes on, there is an open in the No. 7 wire between the left failure sensor and the right failure sensor.

   - If the BRAKE LAMP does not come on, go to step 5.

5. Make sure the BRAKE LAMP does not come on when the ignition switch is turned OFF to ON with the No.9 terminal of the 6-P connector grounded and the brake pedal pressed.

   - If the BRAKE LAMP comes on, replace the right failure sensor.

   - If the BRAKE LAMP does not come on, check for an open in the No. 9 wire between the right failure sensor and ground, and check whether the G501 (G503 for KG model) terminal is poor.

Safety Indicator

Brake Light Failure Sensor Test

1. First make sure the brake lights come on when the brake pedal is pressed.

   - If none of the brake lights come on, check the brake light circuit (see page 16-119).

   - If one of the brake lights does not comes on, check whether the bulb is blown. If the bulb is OK, go to step 2.

   - If all the brake lights come on, go to step 2.

2. Open the trunk lid and the maintenance lid of the left taillight. Make sure the BRAKE LAMP of the safety indicator does not come on when the No. 1 terminal of the 6-P connector is grounded and the ignition switch is turned OFF to ON.

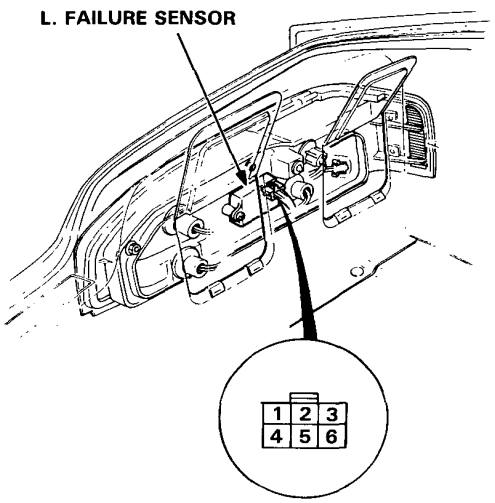

View from wire side

   - If the BRAKE LAMP comes on, check for an open in the No. 1 wire between the safety indicator and the left failure sensor and whether the safety indicator has a problem.

   - If the BRAKE LAMP does not come on, go to step 3.

3. Make sure the BRAKE LAMP does not come on when the ignition switch is turned OFF to ON with the No.3 terminal of the 6-P connector grounded and the brake peal pressed.

   - If the BRAKE LAMP comes on, replace the left failure sensor.

   - If the BRAKE LAMP does not come on, go to step 4.

4. Open the maintenance lid of the right taillight. Make sure the BRAKE LAMP does not come on when the ignition switch is turned OFF to ON with the No.7 terminal of the 6-P connector grounded and the brake pedal pressed.

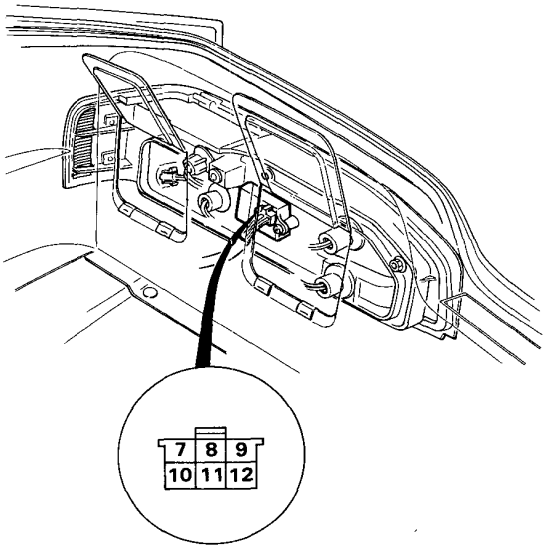

View from wire side

   - If the BRAKE LAMP comes on, there is an open in the No. 7 wire between the left failure sensor and the right failure sensor.

   - If the BRAKE LAMP does not come on, go to step 5.

5. Make sure the BRAKE LAMP does not come on when the ignition switch is turned OFF to ON with the No.9 terminal of the 6-P connector grounded and the brake pedal pressed.

   - If the BRAKE LAMP comes on, replace the right failure sensor.

   - If the BRAKE LAMP does not come on, check for an open in the No. 9 wire between the right failure sensor and ground, and check whether the G501 (G503 for KG model) terminal is poor.

Shift Lever Position Indicator

Component Location Index

• **A/T CONTROL SYSTEM**
See Automatic Transmission, section 9

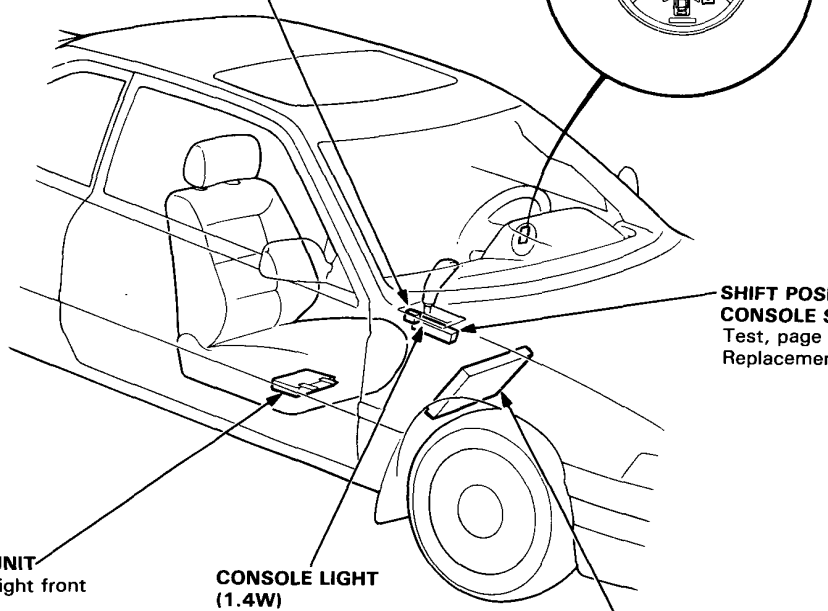

S4 INDICATOR
(in the safety indicator)
Troubleshooting, section 9
Bulb Replacement, page 16-78

SHIFT LEVER POSITION INDICATOR
Removal, page 16-80
Input Test, page 16-96
Bulb Replacement, page 16-78

S4 SWITCH
See Automatic Transmission, section 9

SHIFT POSITION CONSOLE SWITCH
Test, page 16-98
Replacement, page 16-99

A/T CONTROL UNIT
(Located under right front seat)
See Automatic Transmission, section 9

CONSOLE LIGHT (1.4W)

PGM—FI ECU
(Located passenger's front floor)
See Fuel, section 6

Circuit Diagram

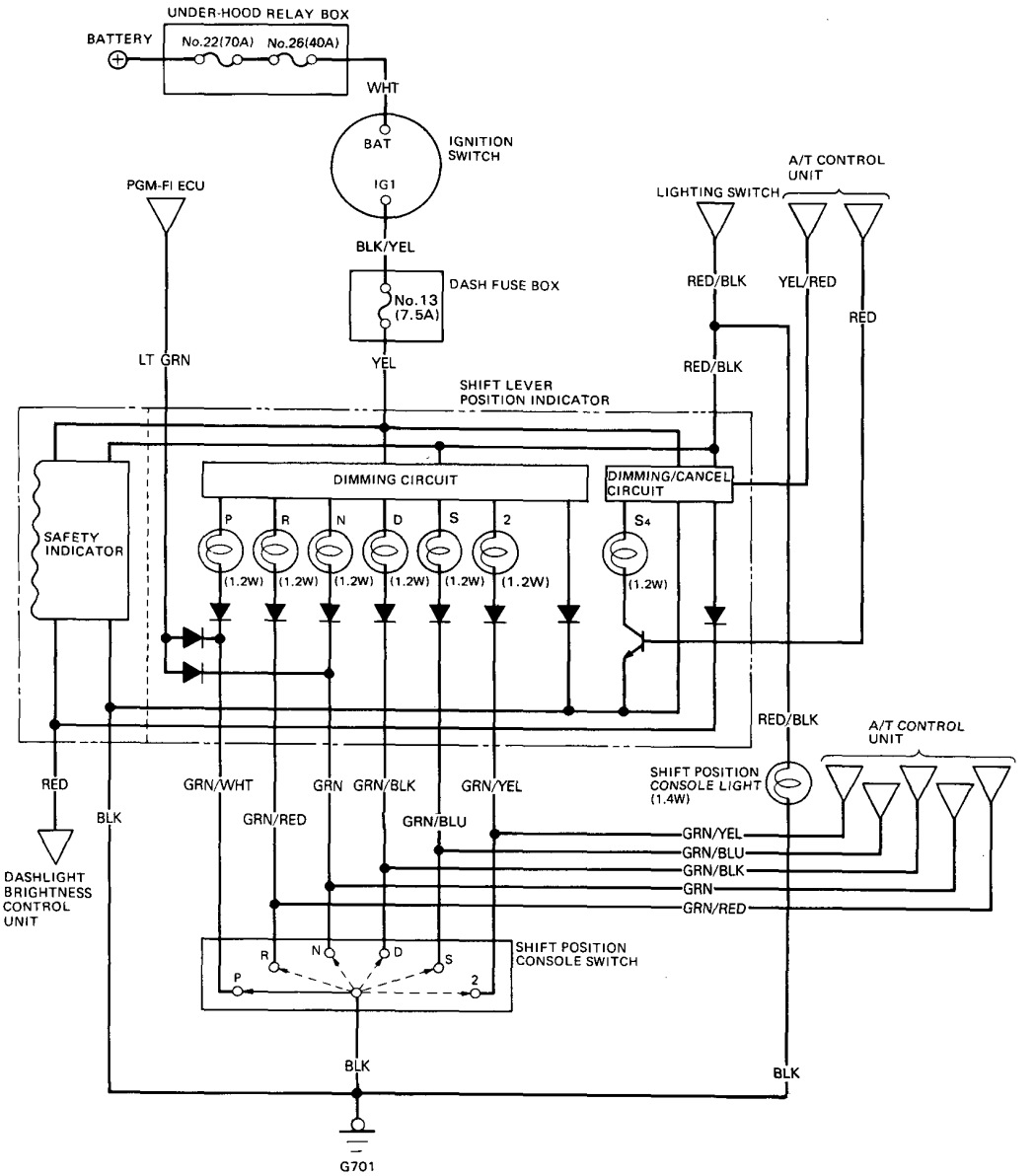

Shift Lever Position Indicator

Indicator Input Test

Remove the gauge assembly from the dashboard to disconnect the 10-P and 16-P connectors from the indicators.
Make the following input tests at the harness pins.
If all tests prove OK, yet the indicator still fails to work, replace the indicator assembly.

NOTE: Several different wires have the same color. They have been given a number suffix to distinguish them (for example RED[1] and RED[2] are not the same).

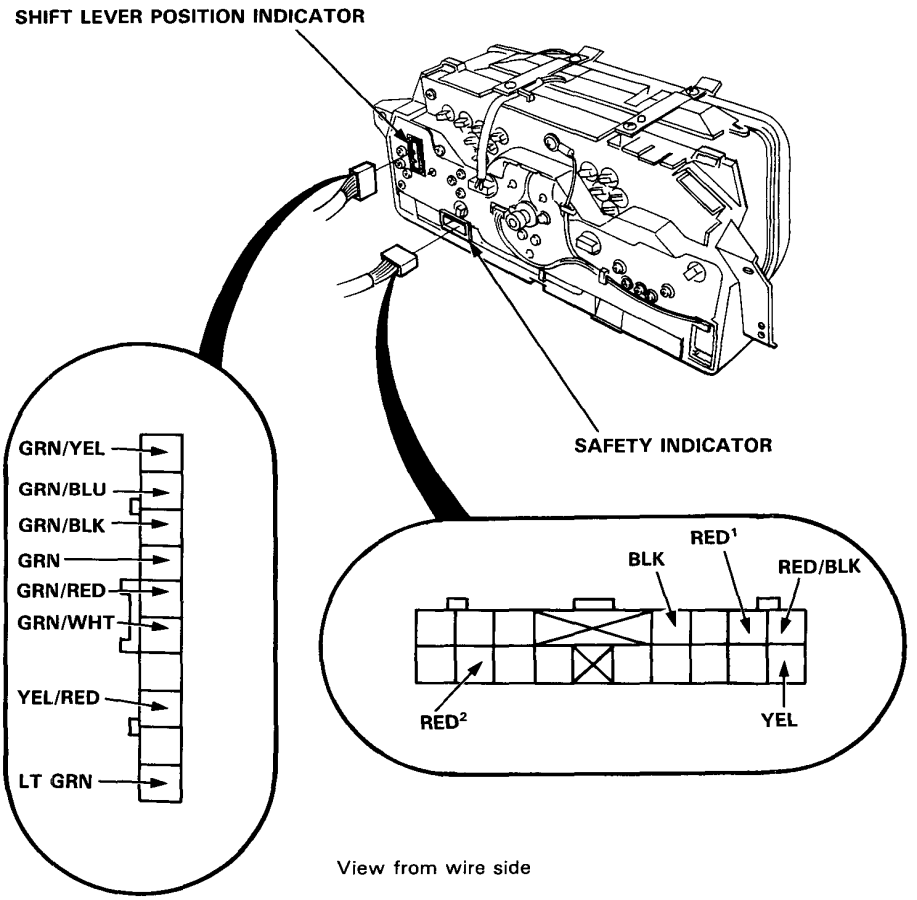

View from wire side

No.	Wire	Test condition	Test: desired result	Possible cause (if result is not obtained)
1	BLK	Under all conditions.	Check for continuity to ground: should be continuity.	• Poor ground (G701). • An open in the wire.
2	YEL	Ignition switch ON.	Check for voltage to ground: should be battery voltage.	• Blown No. 13 (7.5A) fuse. • An open in the wire.
3	GRN/WHT	Shift lever position in P.	Check for continuity to ground: should be continuity.	• Faulty shift position console switch. • Poor ground (G701). • An open in the wire.
	GRN/RED	Shift lever position in R.		
	GRN	Shift lever position in N.		
	GRN/BLK	Shift lever position in D.		
	GRN/BLU	Shift lever position in S.		
	GRN/YEL	Shift lever position in 2.		
4	RED/BLK and RED[1]	Lighting switch ON and dashlight brightness control dail on full bright.	Check for voltage between RED/BLK and RED[1] termminals: should be battery voltage.	• Faulty dashlight brightness control system. • An open in the wire.
5	LT GRN	Ignition switch ON.	Check for voltage to ground: should be about 10V.	• Faulty PGM-FI system. • An open in the wire.
6	YEL/RED or RED[2]	Ignition switch ON, S_4 switch ON and shift lever position switch in S.	Check for voltage to ground: should be battery voltage between RED[2] terminal and ground when the pilot light in the S_4 switch is on.	• Faulty A/T control system. • Faulty S_4 switch. • An open in the wire.

Shift Lever Position Indicator

Console Switch Test

1. Remove the front console and the center instrument panel, then disconnect the 10-P and 2-P connectors from the console switch.
2. Check for continuity between the terminals in each switch position according to the tables.

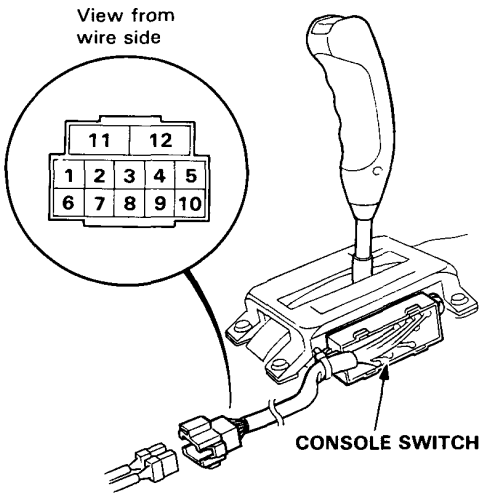

Indicator Switch

Terminal / Position	1	9	8	3	10	6	7
2	○	○					
S	○		○				
D	○			○			
N	○				○		
R	○					○	
P	○						○

(Internal connection)

Shift Position Switch (for cruise control)

1	2
○	○
○	○
○	○

Neutral Safety Switch

Terminal / Position	11	12
2		
S		
D		
N	○	○
R		
P	○	○

Back-up Light Switch

4	5
○	○

Console Switch Replacement

1. Remove the front console and the center instrument panel, then disconnect the 10-P and 2-P connectors from the console switch.

2. Remove the 2 bolts to replace the console switch.

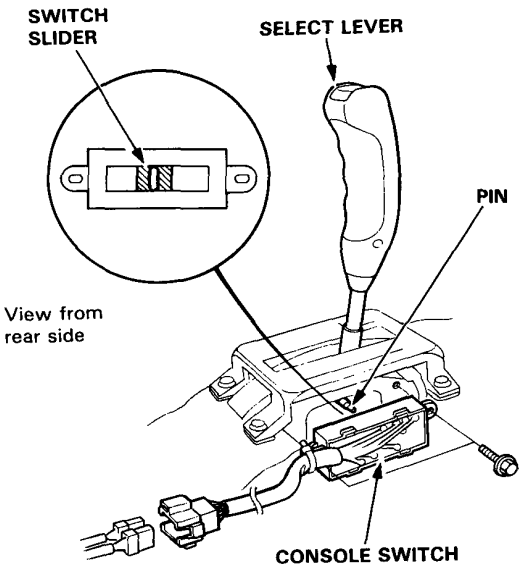

4. Position the switch slider to "Neutral" as shown above.

5. Shift the select lever to "Neutral", then slip the console switch into position.

6. Tighten the switch with the 2 bolts.

Warning Light Test

NOTE: Refer to page 16-76 for wiring description of the washer level warning circuit.

1. Turn the ignition switch on.
   If the washer level warning light comes on, check the washer fluid level, and add washer fluid if necessary.

2. Remove the front bumper, then disconnect the 2-P connector from the washer fluid level switch. Connect the A (GRN/BLK) terminal to the B (BLK) terminal with a jumper wire.
   The warning light should come on as the ignition switch is turned on.

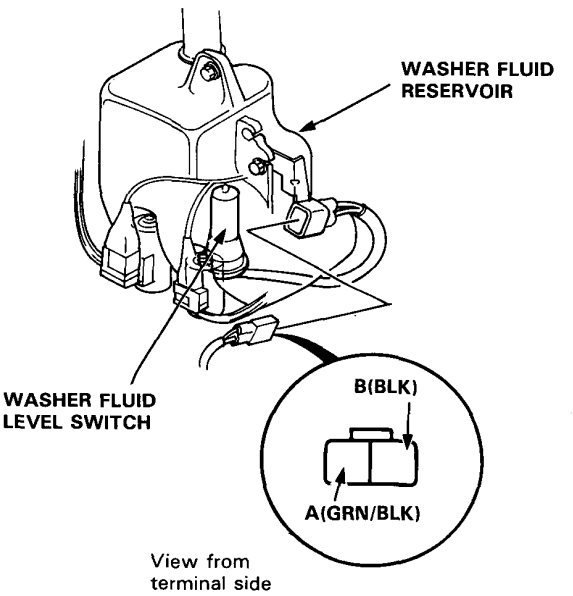

- If the light comes on, the problem is the washer fluid level switch.

- If the light does not come on, check for:
  - Poor ground (G201 or G701).
  - No power to the warning circuit.
  - An open in the GRN/BLK wire to the gauge assembly.
  - Bad bulb.
  - Faulty warning circuit.

Console Switch Replacement

1. Remove the front console and the center instrument panel, then disconnect the 10-P and 2-P connectors from the console switch.

2. Remove the 2 bolts to replace the console switch.

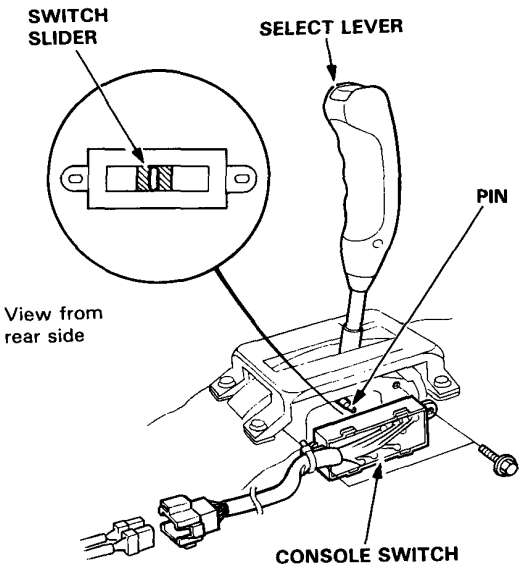

4. Position the switch slider to "Neutral" as shown above.

5. Shift the select lever to "Neutral", then slip the console switch into position.

6. Tighten the switch with the 2 bolts.

Warning Light Test

NOTE: Refer to page 16-76 for wiring description of the washer level warning circuit.

1. Turn the ignition switch on.
   If the washer level warning light comes on, check the washer fluid level, and add washer fluid if necessary.

2. Remove the front bumper, then disconnect the 2-P connector from the washer fluid level switch. Connect the A (GRN/BLK) terminal to the B (BLK) terminal with a jumper wire.
   The warning light should come on as the ignition switch is turned on.

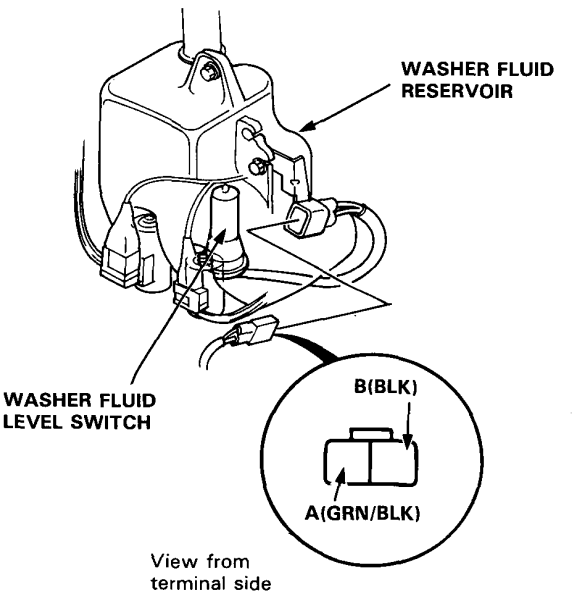

- If the light comes on, the problem is the washer fluid level switch.

- If the light does not come on, check for:
  - Poor ground (G201 or G701).
  - No power to the warning circuit.
  - An open in the GRN/BLK wire to the gauge assembly.
  - Bad bulb.
  - Faulty warning circuit.

Integrated Control Unit

Circuit Diagram

NOTE: Several different wires have the same color. They have been given a number suffix to distinguish them (for example YEL/GRN[1] and YEL/GRN[2] are not the same).

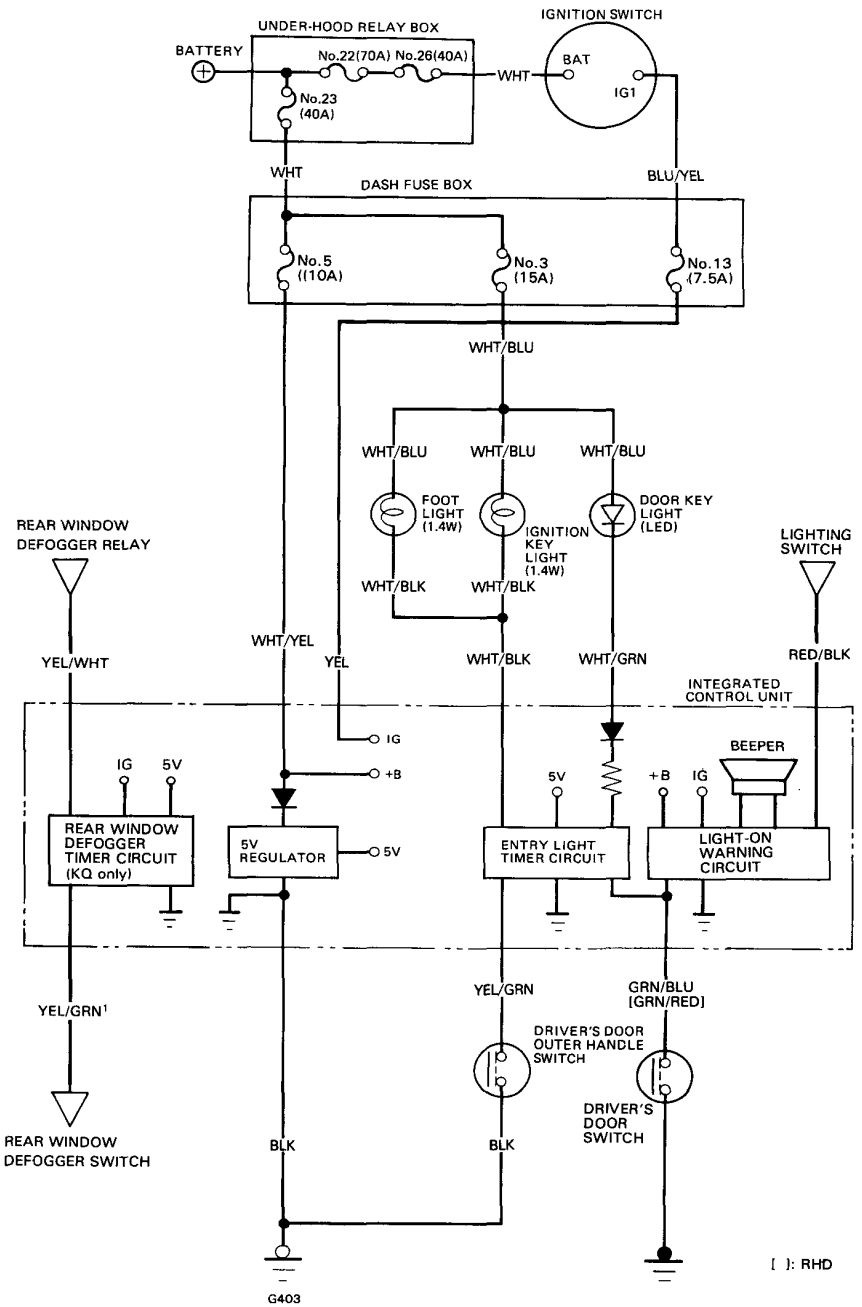

Input Test

Description:
A multi-function control unit located under the driver's side of the dashboard, integrates the functions of the entry light timer, light-on warning and rear window defogger timer onto one circuit board, sharing common circuit functions.

Input Test:
Remove the dashboard lower panel, and the dash relay holder from the bracket, to disconnect the 13-P connector from the control unit.
Make the following input tests at the harness pins.
If all tests prove OK, yet the system still fails to work, replace the control unit.

NOTE: Several different wires have the same color. They have been given a number suffix to distinguish them (for example YEL/GRN[1] AND YEL/GRN[2] are not the same).

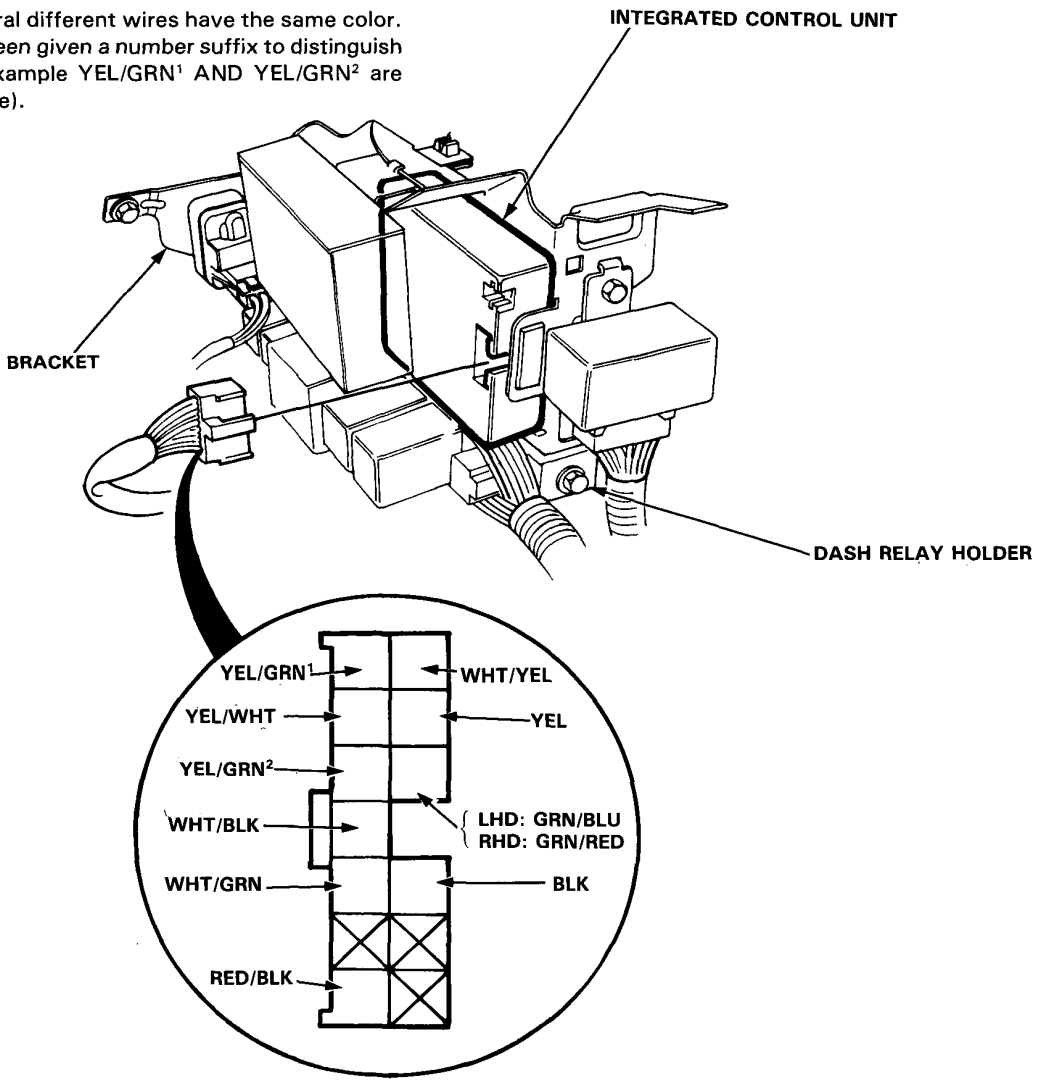

View from wire side

(cont'd)

Input Test (cont'd)

Entry Light Timer System:

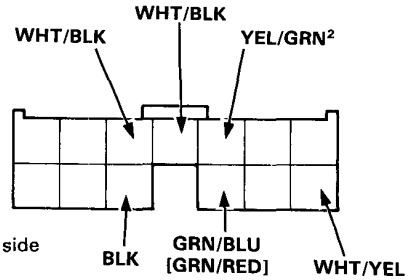

View from wire side

No.	Wire	Test condition	Test: desired result	Possible cause (if result is not obtained)
1	BLK	Under all conditions.	Check for continuity to ground: should be continuity.	• Poor ground (G403). • An open in the wire.
2	WHT/YEL	Under all conditions.	Check for voltage to ground: should be battery voltage.	• Blown No. 5 (10A) fuse. • An open in the wire.
3	YEL/GRN²	Driver's door outer handle pulled.	Check for continuity to ground: should be continuity as the outer handle is pulled.	• Faulty outer handle switch. • Poor ground (G403). • An open in the wire.
4	WHT/BLK	Under all conditions.	Attach to ground: Ignition key and foot lights should come on.	• Blown bulb or No. 3 (15A) fuse. • An open in the wire.
5	GRN/BLU [GRN/RED]	Driver's door opened.	Check for continuity to ground: should be continuity. NOTE: Before testing, remove No. 3 (15A) fuse.	• Faulty driver's door switch. • An open in the wire.
6	WHT/GRN	Under all conditions.	Check for voltage to ground: should be about 10V.	• Faulty door key light. • An open in the wire.

[ ]: RHD

Light-on Warning System:

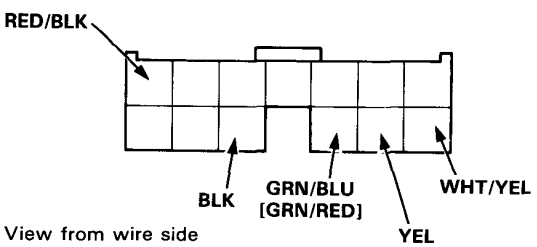

View from wire side

No.	Wire	Test condition	Test: desired result	Possible cause (if result is not obtained)
1	BLK	Under all conditions.	Check for continuity to ground: should be continuity.	• Poor ground (G403). • An open in the wire.
2	WHT/YEL	Under all conditions.	Check for voltage to ground: should be battery voltage.	• Blown No. 5 (10A) fuse. • An open in the wire.
3	YEL	Ignition switch ON.	Check for voltage to ground: should be battery voltage.	• Blown No. 13 (7.5A) fuse. • An open in the wire.
4	GRN/BLU [GRN/RED]	Left door opened.	Check for continuity to ground: should be continuity. NOTE: Before testing, remove No. 3 (15A) fuse.	• Faulty driver's door switch. • An open in the wire.
5	RED/BLK	Lighting switch ON.	Check for voltage to ground: should be battery voltage.	• Blown No. 7 (15A) fuse. • Faulty lighting switch. • An open in the wire.

[ ]: RHD

Rear Window Defogger Timer System:

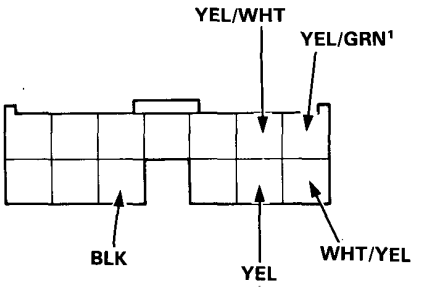

View from wire side

No.	Wire	Test condition	Test: desired result	Possible cause (if result is not obtained)
1	BLK	Under all conditions.	Check for continuity to ground: should be continuity.	• Poor ground (G403). • An open in the wire.
2	YEL	Ignition switch ON.	Check for voltage to ground: should be battery voltage.	• Blown No. 13 (7.5A) fuse. • An open in the wire.
3	WHT/YEL	Under all conditions.	Check for voltage to ground: should be battery voltage.	• Blown No. 5 (10A) fuse. • An open in the wire.
4	YEL/GRN¹	Defogger switch pushed.	Check for continuity to ground: should be continuity as the switch is pushed.	• Faulty defogger switch. • Poor ground (G701). • An open in the wire.
5	YEL/WHT	Ignition switch ON.	Attach to ground: Rear window defogger should work and the defogger switch indicator light should come on.	• Blown No. 9 (10A) fuse. • Faulty defogger relay. • Blown bulb. • An open in the wire.

Light-on Warning System

Description

NOTE: Refer to page 16-100 for wiring description of the light-on warning circuit, and page 16-101 for the input test of the warning circuit.

When the ignition key is turned to "Off" position and removed, with the lights on, voltage is applied to the warning circuit on the integrated control unit. When you open the driver's door, the warning circuit senses ground through the closed door switch.
With voltage at the RED/BLK terminal, ground at the GRN/BLU (or GRN/RED) terminal and no voltage at the YEL terminal, the beeper in the integrated control unit is activated to remind the driver to turn off the lights.

Brake Warning System

Description

NOTE: Refer to page 16-76 for wiring description of the circuit check system.

Description:
The brake warning light goes on if the parking brake is applied, if the brake fluid level is low and if the brake light bulb is blown (and for KQ only, as a circuit test while cranking the engine).

Parking Brake:
With the ignition switch in "Run" or "Start", and the parking brake switch closed, the brake warning light operates to remind the driver that the parking brake is applied.

Brake Fluid Level:
With the ignition switch in "Run" or "Start", and the brake fluid level switch closed, the brake warning light operates to warn the driver of low brake fluid level in the brake master cylinder.

NOTE: Low fluid level indicates brake wear or system leaks; check brake pad wear before adding fluid.

Circuit Check (KQ only):
With the ignition switch in "Start" voltage is applied through the No. 2 (7.5A) fuse in the dash fuse box to the circuit check built into the top circuit board in the gauge assembly. The circuit check circuit transistor is on, and current flows through the No. 13 (7.5A) fuse in the dash fuse box, the brake warning light and the circuit check transistor to ground. The brake warning light operates. This operation tests the brake warning circuit and bulb.

Brake Fluid Level Switch Test

1. Remove the reservoir cap. Check that the float moves up and down freely.
   Replace the reservoir cap assembly if the float does not move freely.

2. Check for continuity between the terminals with the float up and down.
   There should be continuity with the float down and no continuity with the float up.
   Replace the reservoir cap assembly if necessary.

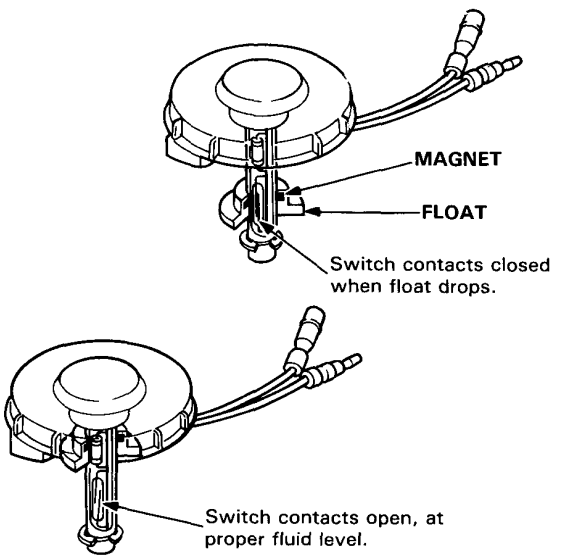

Parking Brake Switch Test

1. Remove the center console and disconnect the connector from the switch.

2. There should be continuity between the positive terminal and body ground with the brake lever up.
   There should be no continuity with the brake lever down.

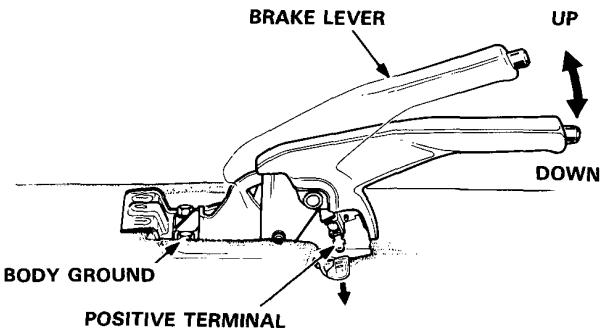

Warning Light Test

NOTE: Refer to page 16-76 for wiring description of the low fuel warning circuit.

1. Park car on level ground.

   WARNING Do not smoke while working on fuel system. Keep open flame away from work area. *Drain fuel only into an approved container.*

2. Drain fuel tank into an approved container.
   Then install the drain bolt with a new washer.

3. Add less than 11 ℓ (2.9 U.S. Gal, 2.4 Imp. Gal) of fuel and turn the ignition switch on.
   The low fuel warning light should come on within 4 minutes.

4. Then add one more gallon of fuel [approx. 4 ℓ (1.1 U.S. Gal, 0.9 Imp. Gal)].
   The light should go out within 4 minutes.

   - If the warning light did not come on in step 3, remove the maintenance access cover and disconnect the 3-P connector from the fuel gauge sending unit. Connect the C (GRN/RED) terminal to the A (BLK) terminal with a jumper wire.
     - If the light comes on, the problem is either the sending unit or its ground.
     - If the light does not come on, the problem is an open in the GRN/RED wire to the gauge assembly, no power to the gauge or bad bulb.

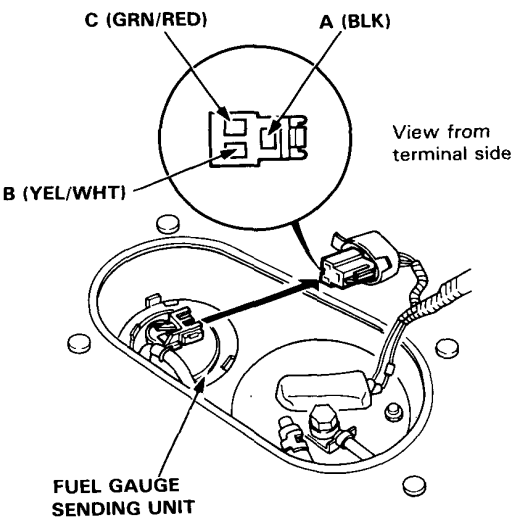

Brake Fluid Level Switch Test

1. Remove the reservoir cap. Check that the float moves up and down freely.
   Replace the reservoir cap assembly if the float does not move freely.

2. Check for continuity between the terminals with the float up and down.
   There should be continuity with the float down and no continuity with the float up.
   Replace the reservoir cap assembly if necessary.

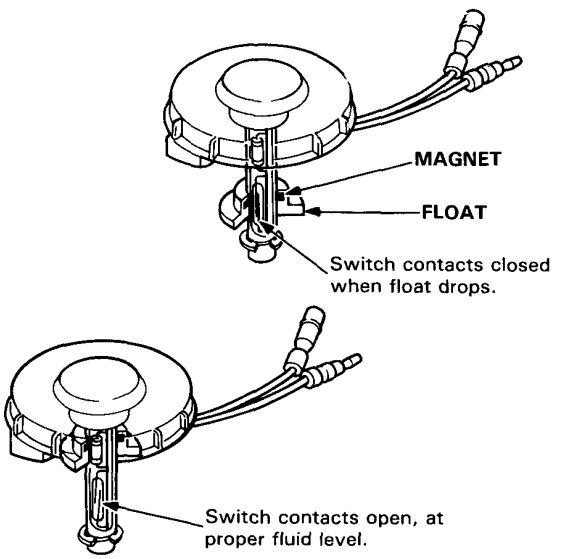

Parking Brake Switch Test

1. Remove the center console and disconnect the connector from the switch.

2. There should be continuity between the positive terminal and body ground with the brake lever up.
   There should be no continuity with the brake lever down.

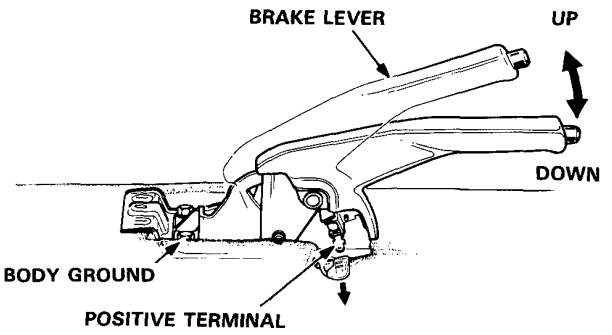

Warning Light Test

NOTE: Refer to page 16-76 for wiring description of the low fuel warning circuit.

1. Park car on level ground.

   WARNING Do not smoke while working on fuel system. Keep open flame away from work area. *Drain fuel only into an approved container.*

2. Drain fuel tank into an approved container.
   Then install the drain bolt with a new washer.

3. Add less than 11 ℓ (2.9 U.S. Gal, 2.4 Imp. Gal) of fuel and turn the ignition switch on.
   The low fuel warning light should come on within 4 minutes.

4. Then add one more gallon of fuel [approx. 4 ℓ (1.1 U.S. Gal, 0.9 Imp. Gal)].
   The light should go out within 4 minutes.

   - If the warning light did not come on in step 3, remove the maintenance access cover and disconnect the 3-P connector from the fuel gauge sending unit. Connect the C (GRN/RED) terminal to the A (BLK) terminal with a jumper wire.
     - If the light comes on, the problem is either the sending unit or its ground.
     - If the light does not come on, the problem is an open in the GRN/RED wire to the gauge assembly, no power to the gauge or bad bulb.

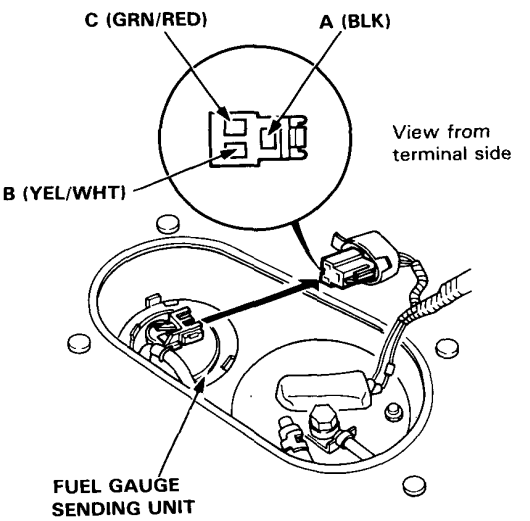

Oil Pressure/Level Warning System

Component Location Index

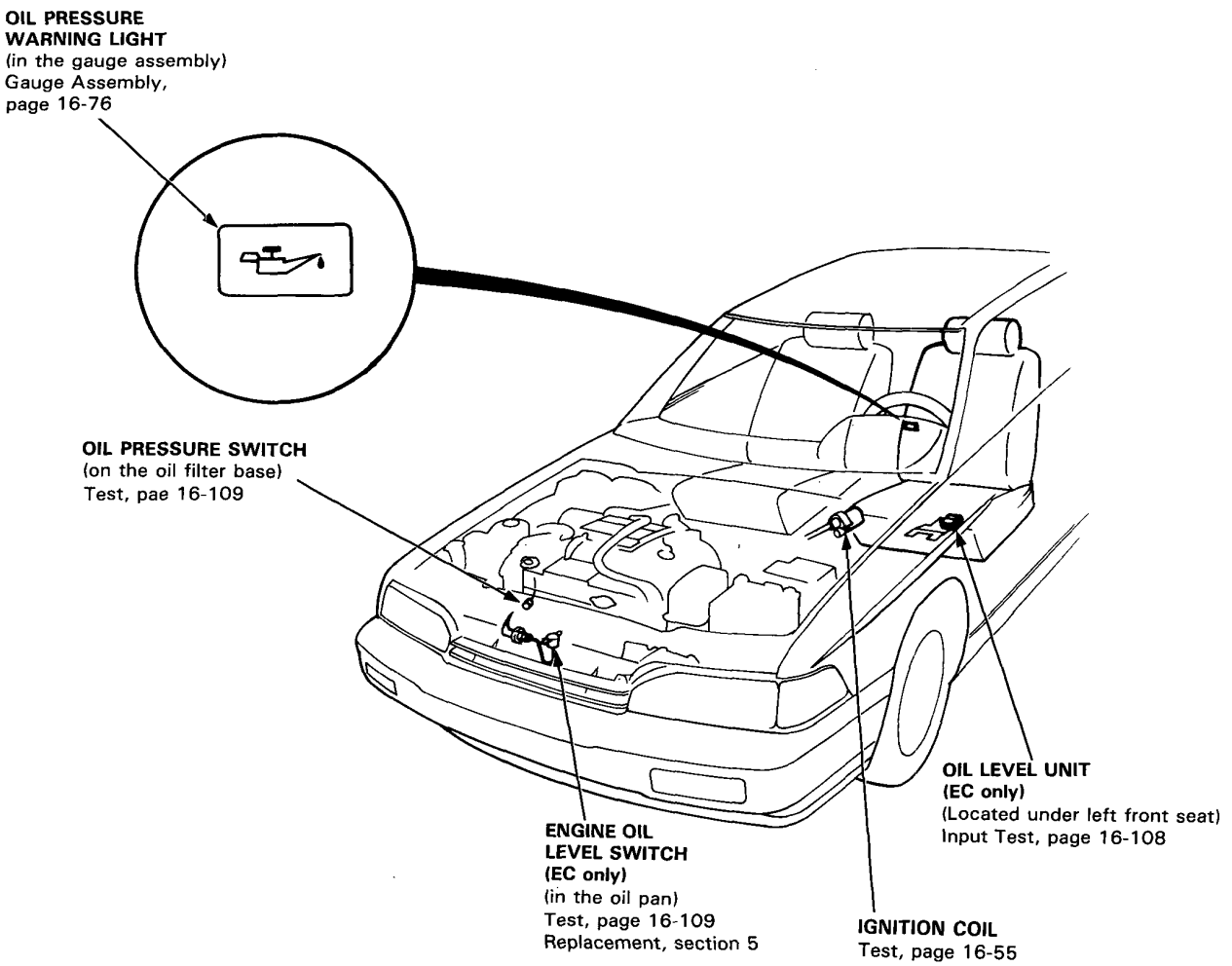

Circuit Diagram

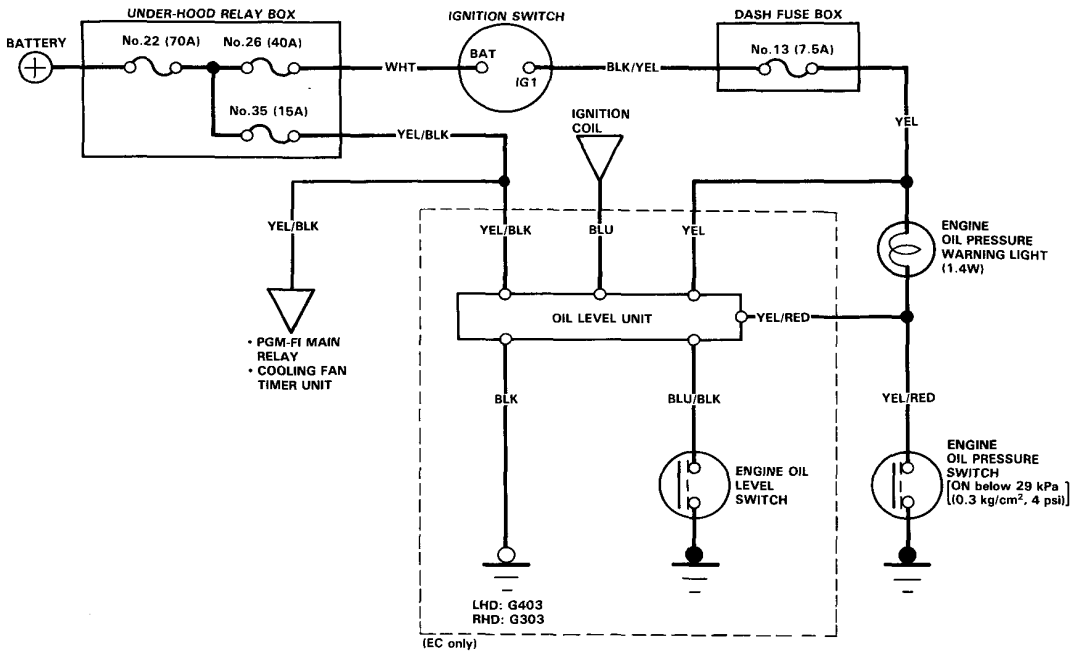

Troubleshooting

NOTE: The numbers in the table show the troubleshooting sequence.

Symptom \ Items to be inspected	Insuficient engine oil	Blown No. 35 (15A) fuse (in the under-hood relay box)	Blown No. 13 (7.5A) fuse (in the dash fuse box)	Blown warning light buld	Oil level switch	Oil pressure switch	Lubricating system	Oil lever unit input	Poor ground	Open circuit in wires or loose or disconnected terminals
Warning light fails to come on when ignition switch is turned to ON.			1	2		3				YEL/RED
Warning light stays on when engine runs.	1					2	3			

EC model only:

Warning light flashes with ignition switch ON.	1									
Warning light does not flash with low oil level.		1	2		3			4	LHD: G403 RHD: G303	YEL, YEL/BLK or BLU/BLK
Warning light flashes when engine runs.	1							2		BLU

Oil Pressure/Level Warning System

Oil Level Unit Input Test

Disconnect the 6-P connector from the control unit. Make the following input tests at the harness pins.

NOTE: Recheck the connections between the 6-P connector and the unit, the replace the control unit if all input tests prove OK.

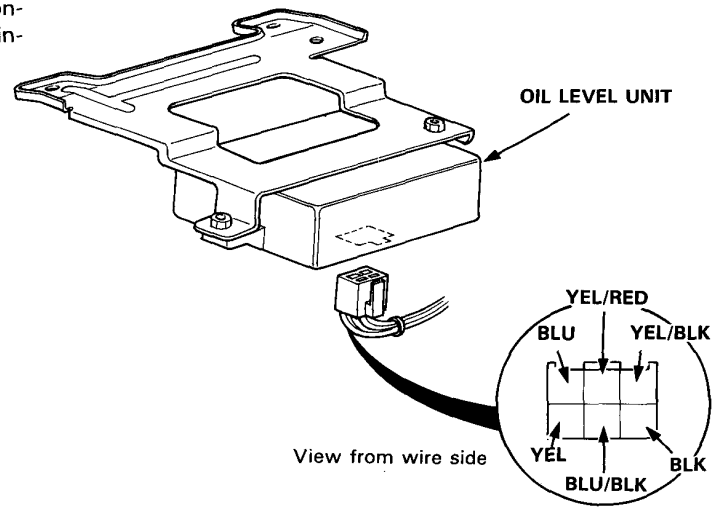

No.	Wire	Test condition	Test: desired result	Possible cause (if result is not obtained)
1	BLK	Under all conditions.	Check for continuity to ground: should be continuity.	• Poor ground. (LHD: G403, RHD: G303) • An open in the wire.
2	YEL/BLK	Under all conditions.	Check for voltage to ground: should be battery voltage.	• Blown No. 35 (15A) fuse. • An open in the wire.
3	YEL	Ignition switch ON.	Check for voltage to ground: should be battery voltage.	• Blown No. 13 (7.5A) fuse. • An open in the wire.
4	BLU	Start the engine.	Check for voltage to ground: should be battery voltage.	• Faulty oil pressure switch. • An open in the wire.
5	YEL/RED	Ignition switch OFF.	Check for continuity to ground: should be continuity.	• Faulty ignition system. • An open in the wire.
		Ignition switch ON.	Check warning light operation. If the light does not come on, attach the YEL/RED terminal to ground: Light should come on as the ignition switch is turned ON.	• Blown bulb. • An open in the wire.
		Start the engine.	Check warning light operation: Lights should go off as the engine starts.	• Insufficient oil. • Improper lubrications. • Faulty oil pressure switch.
6	BLU/BLK	Proper engine oil level.	Check for continuity to ground: should be no continuity.	• Faulty oil level switch. • An open in the wire.
		Remove the drain bolt and drain the engine oil thoroughly.	Check for continuity to ground: should be continuity.	

Oil Level Switch Test

1. Remove the right front inner fender.

2. Disconnect the BLU/BLK wire from the positive terminal of the engine oil level switch.

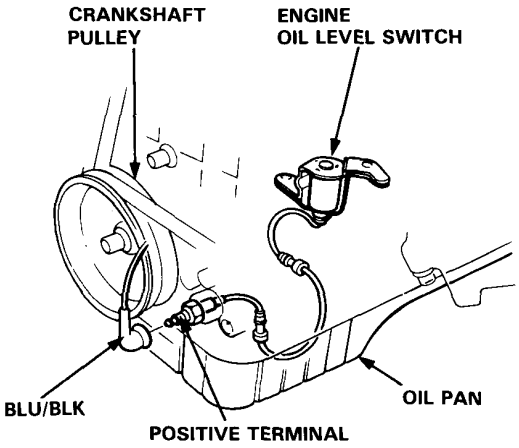

3. There should be continuity between the positive terminal and the engine (ground) with proper engine oil level. There should be no continuity when no engine oil is left in the oil pan.

4. If the switch fails to operate, remove the oil pan and check for disconnected wire between the positive terminal and the switch, then replace the switch if necessary.

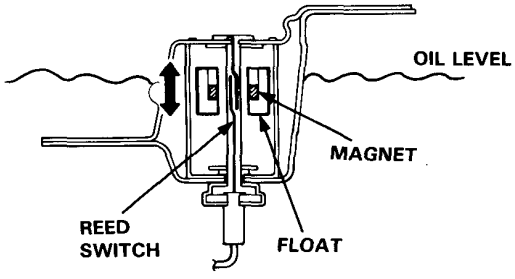

Oil Pressure Switch Test

1. Remove the terminal bolt and the YEL/RED wire from the oil pressure switch.

2. There should be continuity between the positive terminal and the engine (ground) with the engine stopped.
   There should be no continuity when the engine runs.

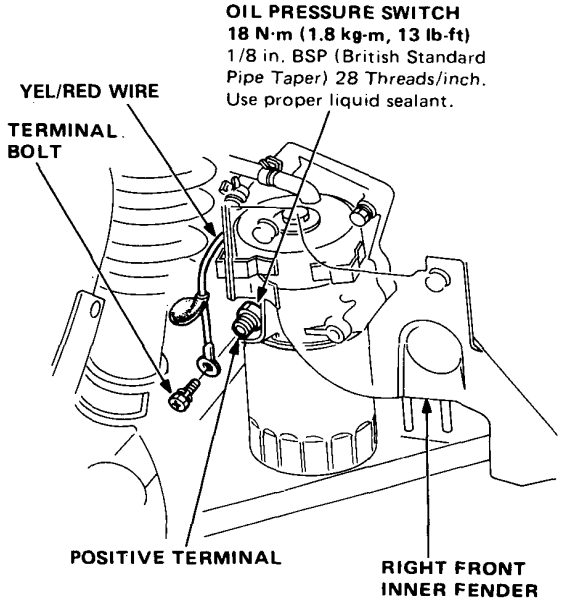

3. If the switch fails to operate, check the engine oil level, then inspect the oil pump and pressure if the oil level is correct (see section 5).

Component Location Index

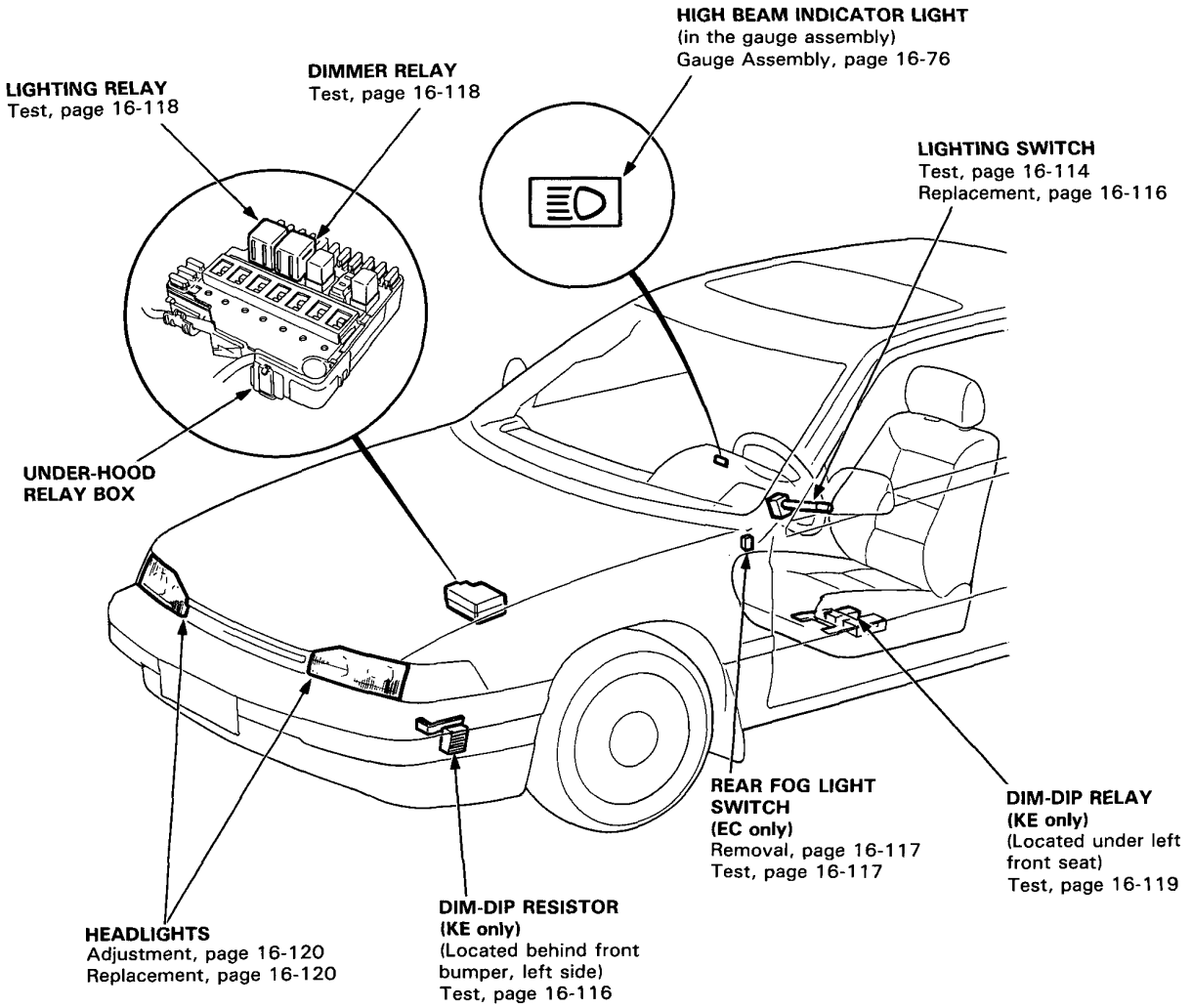

Circuit Diagram (Except EC model)

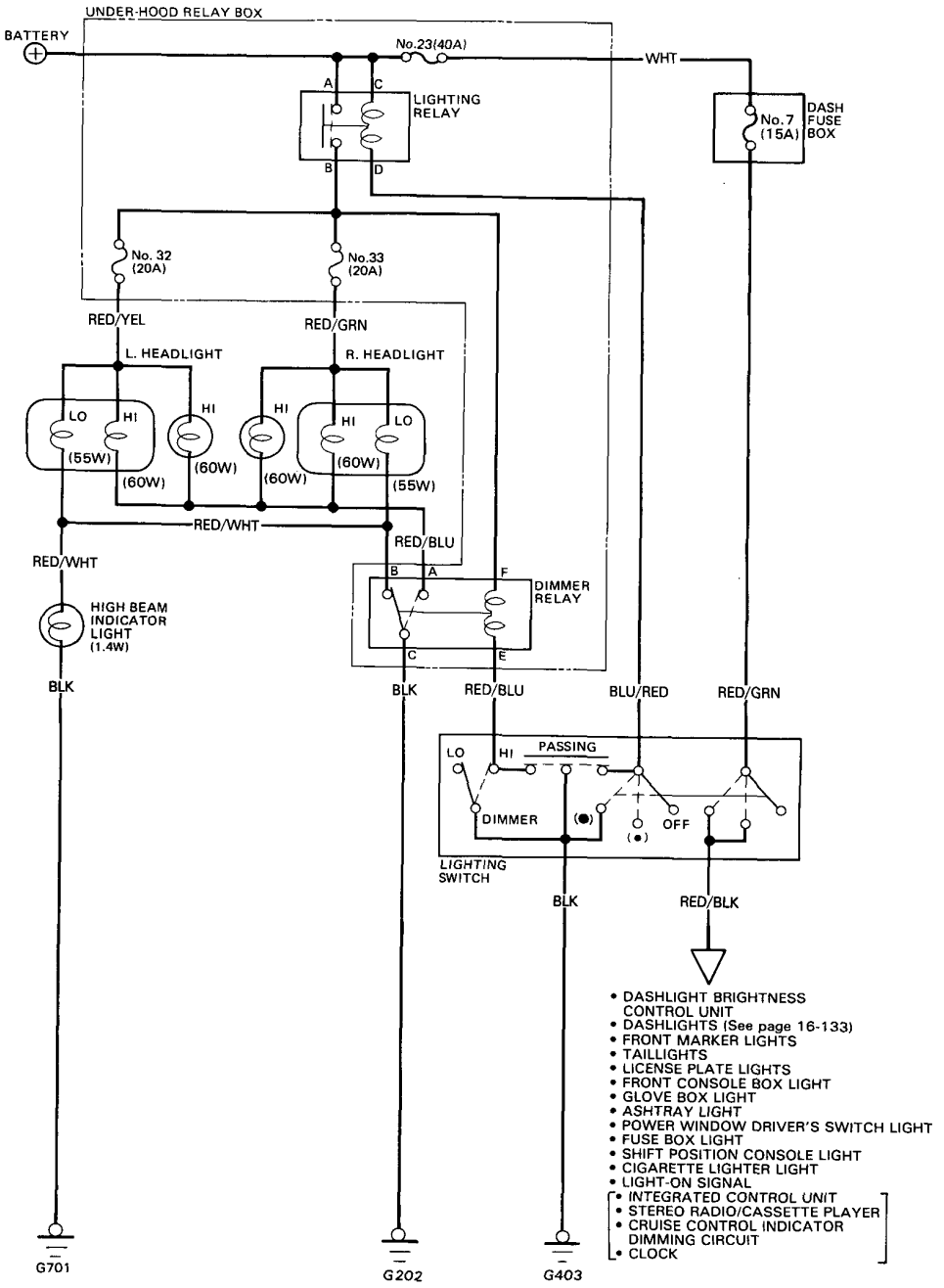

Circuit Diagram (EC model)

KE model:

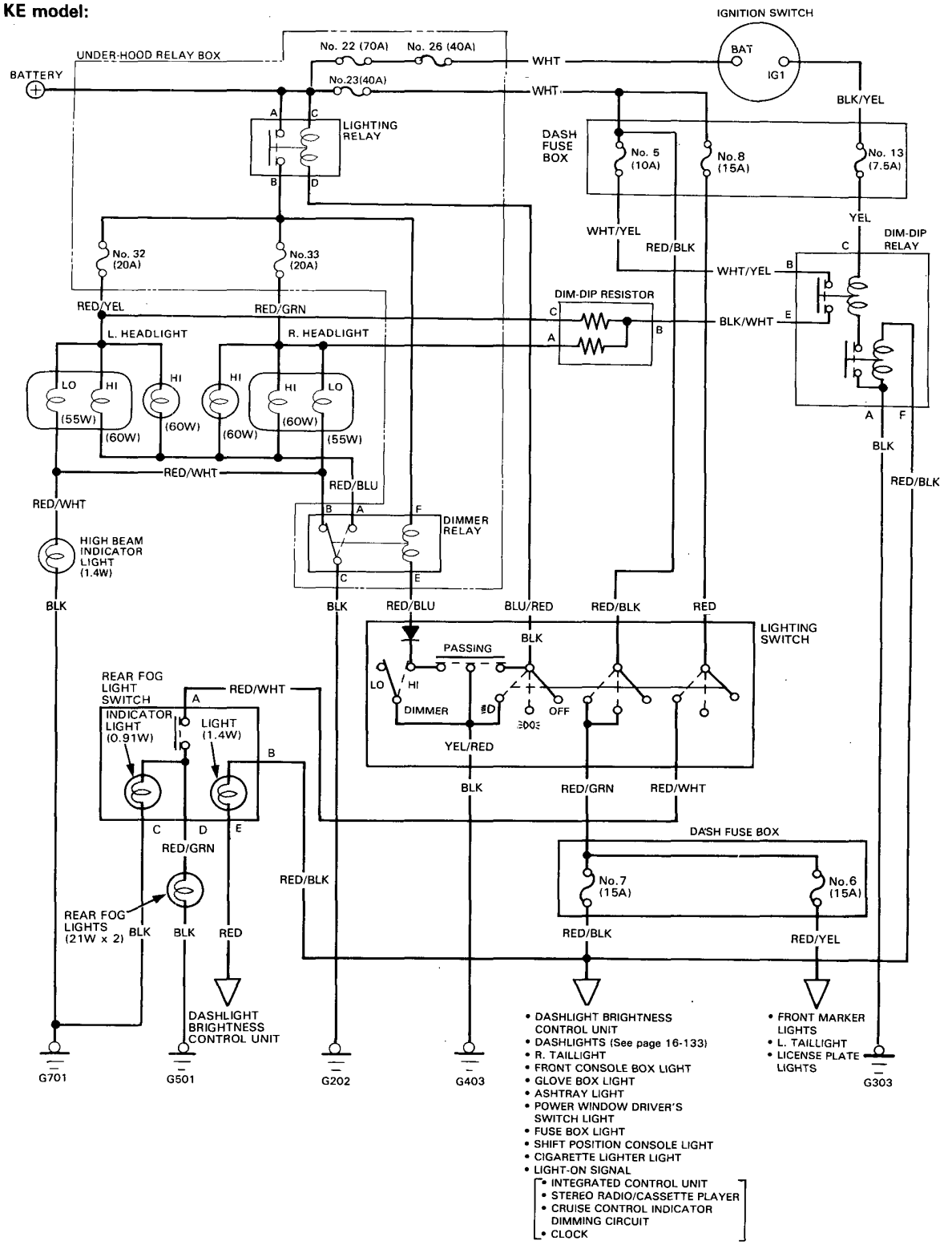

Others:

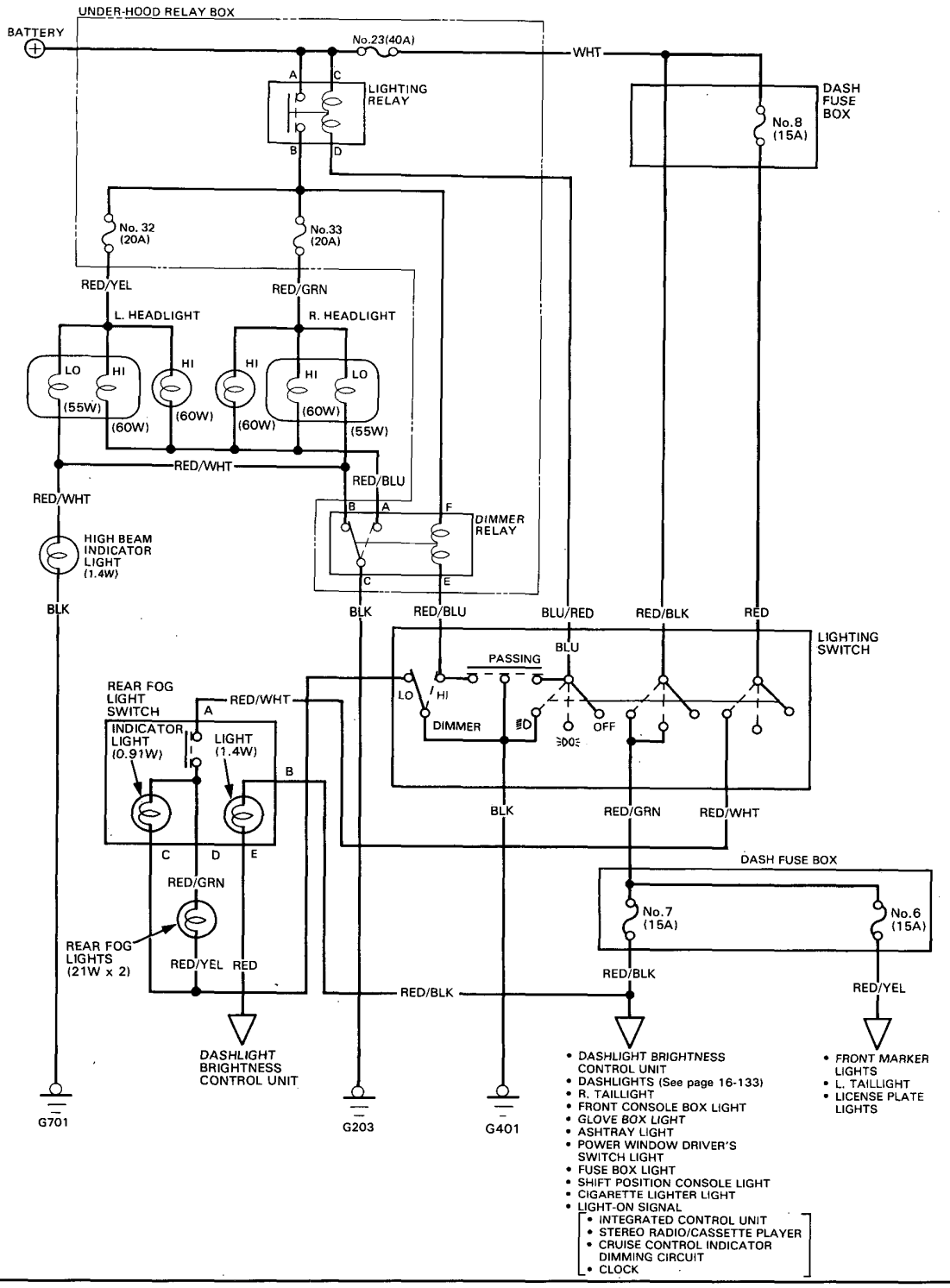
UNDER-HOOD RELAY BOX
BATTERY
No.23(40A)
WHT
LIGHTING RELAY
DASH FUSE BOX
No.8 (15A)
No. 32 (20A)
No.33 (20A)
RED/YEL
RED/GRN
L. HEADLIGHT
R. HEADLIGHT
LO
HI
(55W)
(60W)
RED/WHT
RED/BLU
DIMMER RELAY
HIGH BEAM INDICATOR LIGHT (1.4W)
BLK
BLU/RED
RED/BLK
RED
LIGHTING SWITCH
PASSING
BLU
DIMMER
OFF
REAR FOG LIGHT SWITCH
INDICATOR LIGHT (0.91W)
LIGHT (1.4W)
RED/GRN
REAR FOG LIGHTS (21W x 2)
RED/YEL
DASH FUSE BOX
No.7 (15A)
No.6 (15A)
DASHLIGHT BRIGHTNESS CONTROL UNIT
G701
G203
G401
• DASHLIGHT BRIGHTNESS CONTROL UNIT
• DASHLIGHTS (See page 16-133)
• R. TAILLIGHT
• FRONT CONSOLE BOX LIGHT
• GLOVE BOX LIGHT
• ASHTRAY LIGHT
• POWER WINDOW DRIVER'S SWITCH LIGHT
• FUSE BOX LIGHT
• SHIFT POSITION CONSOLE LIGHT
• CIGARETTE LIGHTER LIGHT
• LIGHT-ON SIGNAL
• INTEGRATED CONTROL UNIT
• STEREO RADIO/CASSETTE PLAYER
• CRUISE CONTROL INDICATOR DIMMING CIRCUIT
• CLOCK
• FRONT MARKER LIGHTS
• L. TAILLIGHT
• LICENSE PLATE LIGHTS

Lighting/Turn Signal Switch Test

1. Remove the dashboard lower panel and disconnect the 13-P connector from the side wire harness (and the 3-P connector from the dash fuse box for EC model).

[ ]: Except KE model
*: Used for cruise control

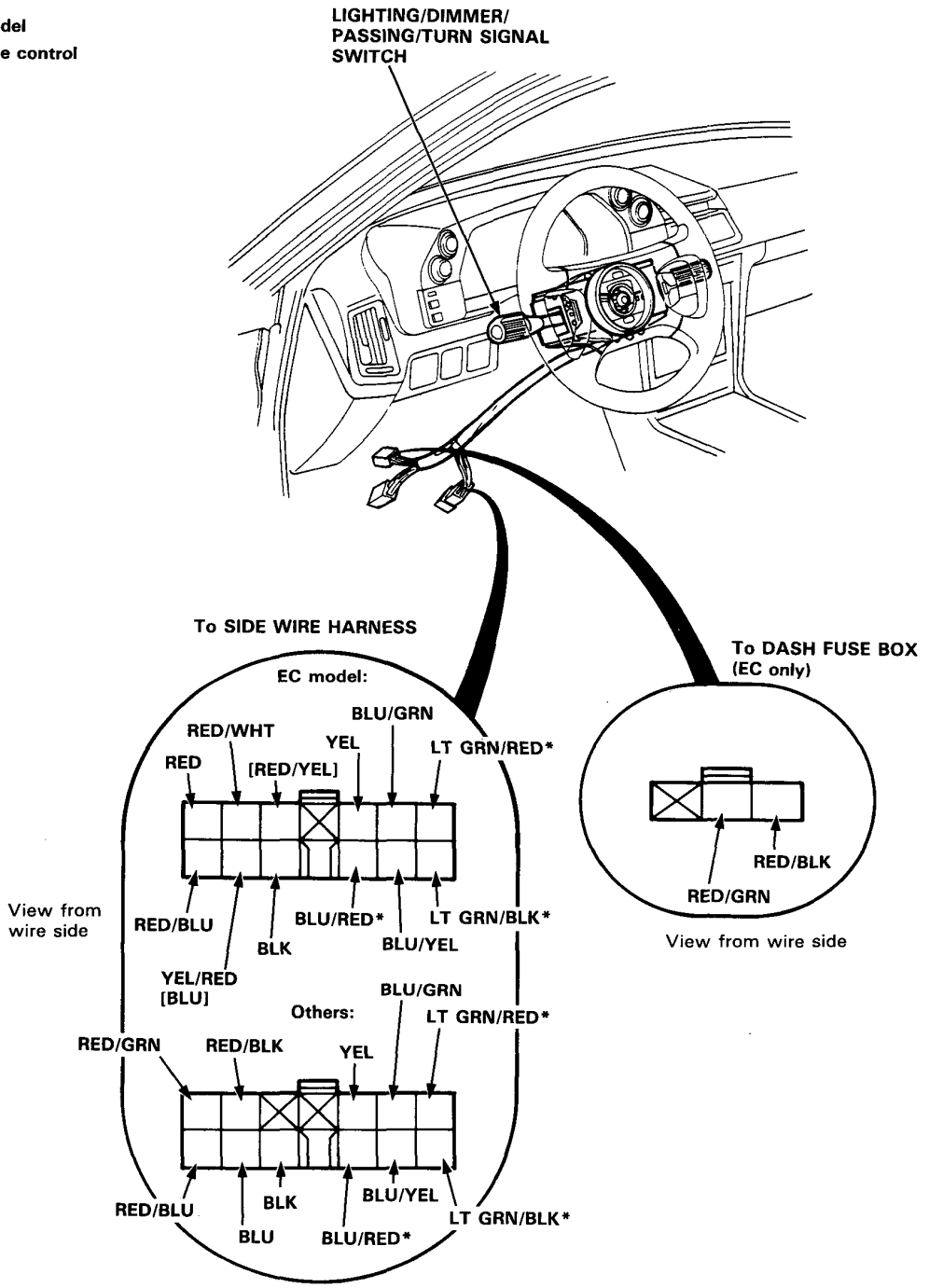

2. Check for continuity between the terminals in each switch position according to the tables.

EC model:

Lighting Switch

[ ]: KE model

Terminal / Position	RED/ GRN	RED/ BLK	RED	RED/ WHT	BLU [YEL/ RED]	BLK
OFF						
≡DO≡	○—○					
≡D	○—○		○—○		○—○	

Passing Switch

[ ]: KE model

Terminal / Position	RED/ BLU	DIODE (KE only)	BLK	BLU [YEL/ RED]
OFF				
ON	○—▶—		○—	○

(Internal connections)

Dimmer Switch

Terminal / Position	BLK	DIODE (KE only)	RED/ BLU	RED/YEL (EC only)
LOW	○—	—	—	○
HIGH	○—	◀—	○	

(Internal connections)

Turn Signal Switch

Terminal / Position	YEL		BLU/GRN	BLU/YEL
R	○—	▶—	—	○
NEUTRAL				
L	○—	▶—	○	

Others:

Lighting Switch

Terminal / Position	RED/GRN	RED/BLK	BLU	BLK
OFF				
•	○—○			
●	○—○		○—	○

Passing Switch

Terminal / Position	RED/BLU	BLK	BLU
OFF			
ON	○—	○—	○

(Internal connections)

Dimmer Switch

Terminal / Position	BLK	RED/BLU
LOW		
HIGH	○—	○

(Internal connections)

Turn Signal Switch

Terminal / Position	YEL		BLU/GRN	BLU/YEL
R	○—	▶—	—	○
NEUTRAL				
L	○—	▶—	○	

Lighting Switch Replacement

1. Remove the dashboard lower panel and disconnect the 13-P connector from the side wire harness (and the 3-P connector from the dash fuse box for EC model).
2. Remove the steering wheel, then remove the lower and upper covers from the steering column.
3. Disconnect the 3-P connector from the slip ring.
4. Remove the 2 screws and slide the lighting switch out of the housing as shown.

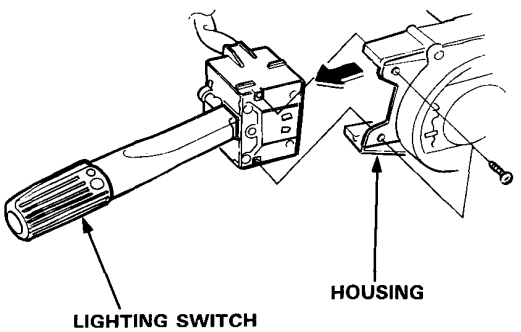

Dim-Dip Resistor Test

CAUTION: Dim-Dip resistor becomes very hot in use of Dim-Dip headlights; do not touch it or the attaching hardware immediately after they have been turned off.

1. Remove the inner fender of the left front wheel house to disconnect the 3-P connector from the resistor.
2. Using an ohmmeter, measure resistance between the terminals. Replace the resistor if the resistance is not within specifications.

   NOTE: Resistance will vary with the resistor temperature; specifications are at 20°C (70°F).

   L. Headlight Resistance
   (between the C and B terminals):
   1.9—2.1 ohms
   R. Headlight Resistance
   (between the A and B terminals):
   1.9—2.1 ohms

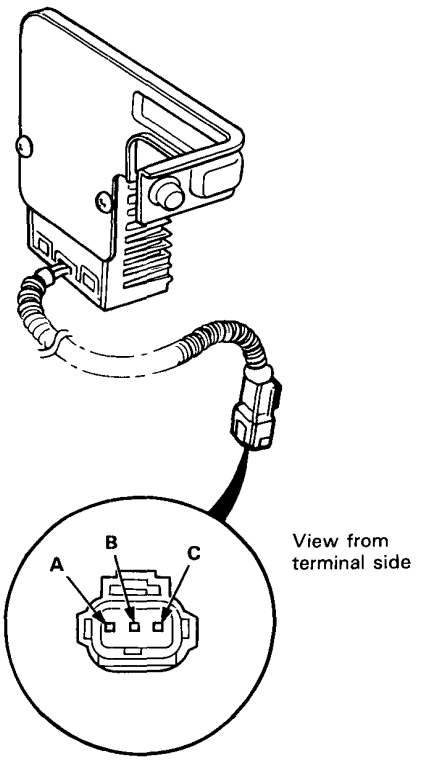

Rear Fog Light Switch Removal

1. Remove the dashboard lower panel.
2. Push the switch from behind the instrument panel, then disconnect the 6-P connector to remove the switch.

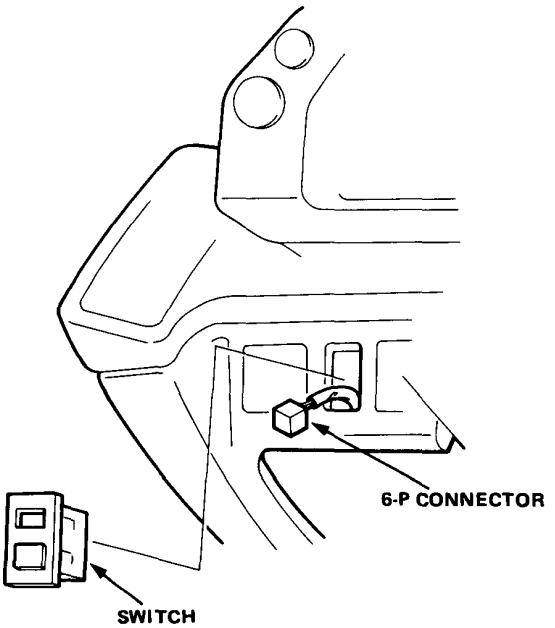

3. Turn the socket 45° counterclockwise to remove it.

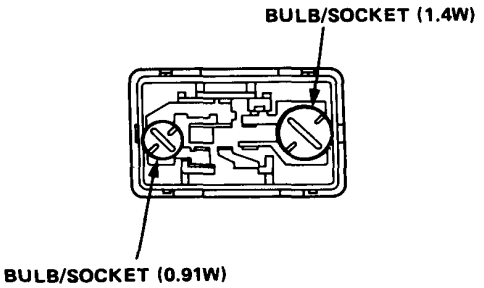

Rear Fog Light Switch Test

1. Remove the rear fog light switch from the instrument panel.
2. Check for continuity between the terminals in each switch position according to the table.

Terminal / Position	A	B		C	B		E
OFF		○	○	○	○	○	○
ON	○	○	○	○	○	○	○

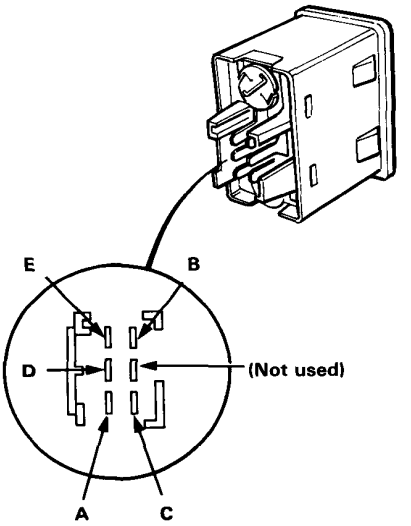

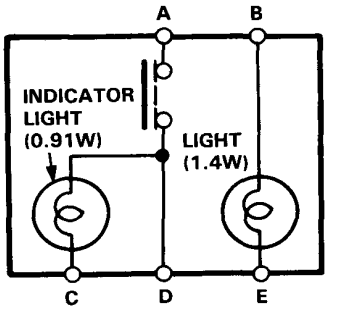

Lighting Relay Test

1. Remove the lighting relay in the under-hood relay box.
2. There should be continuity between the A and B terminals when the battery is connected to the C and D terminals.
   There should be no continuity when the battery is disconnected.

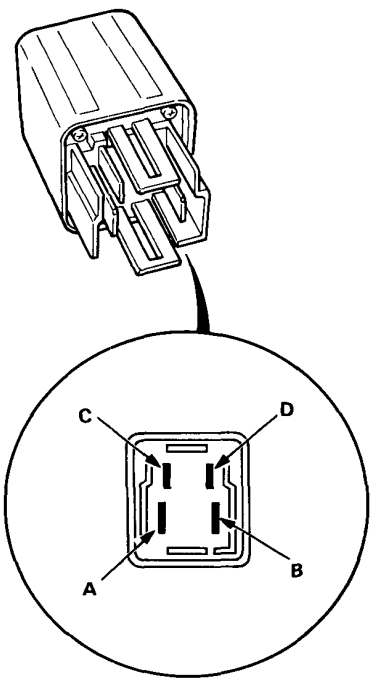

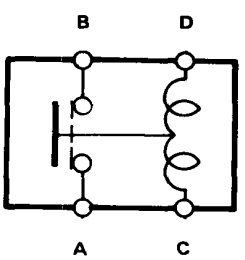

Dimmer Relay Test

1. Remove the dimmer relay in the under-hood relay box.
2. There should be continuity between the A and C terminals when the battery is connected to the E and F terminals.
   There should be continuity between the B and C terminals when the battery is disconnected.

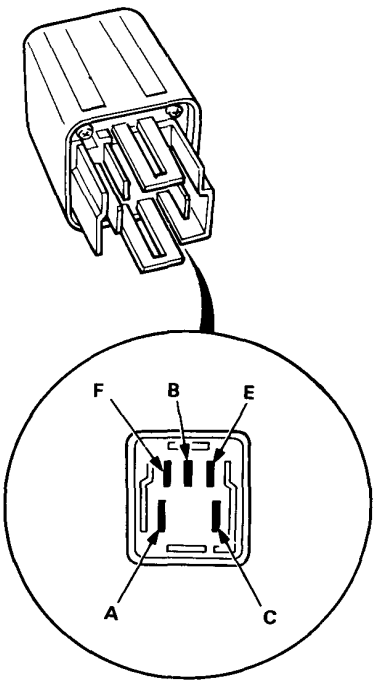

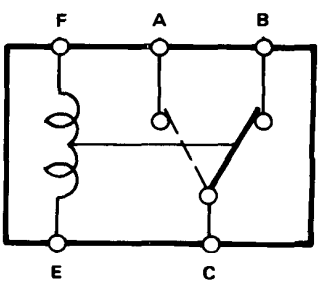

Dim-Dip Relay Test

1. Remove the Dim-Dip relay located under the left front seat.
2. There should be continuity between the B and E terminals with battery positive connected to the C and F terminals, connect negative to the A terminal. There should be no continuity between the B and E terminals when the battery is disconnected.

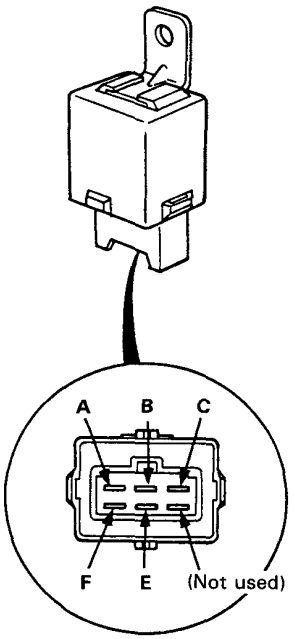

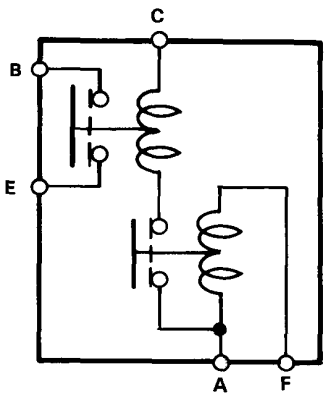

Test

NOTE: Refer to page 16-86 for wiring description of the brake light circuit.

1. Test brake light switch by pushing the brake pedal.
2. If the brake lights do not go on, check the No. 31 (20 A) fuse in the under-hood relay box, and the brake light bulbs in the taillight assembly.
3. If the fuse and bulbs are OK, disconnect the 4-P connector from the brake light switch.

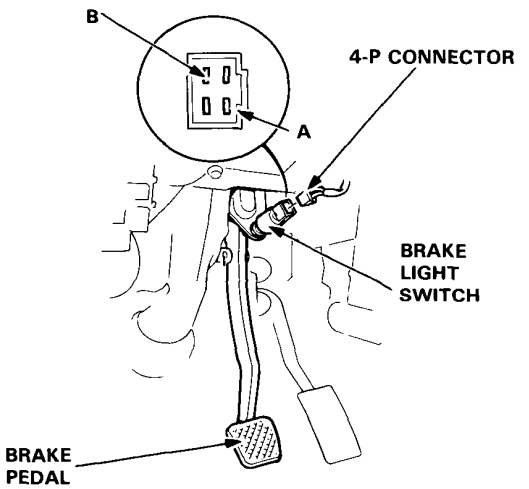

4. Check for continuity between the A and B terminals.
   There should be continuity with the brake pedal pushed.
   - If no continuity, replace the switch or adjust pedal height (see section 13).
   - If there is continuity, but the brake lights do not go on:
     - Poor ground.
       (KG model: G503, Others: G501)
     - An open in the WHT/GRN or GRN/WHT wire.
     - Faulty brake light failure sensors (see page 16-92).

Dim-Dip Relay Test

1. Remove the Dim-Dip relay located under the left front seat.
2. There should be continuity between the B and E terminals with battery positive connected to the C and F terminals, connect negative to the A terminal. There should be no continuity between the B and E terminals when the battery is disconnected.

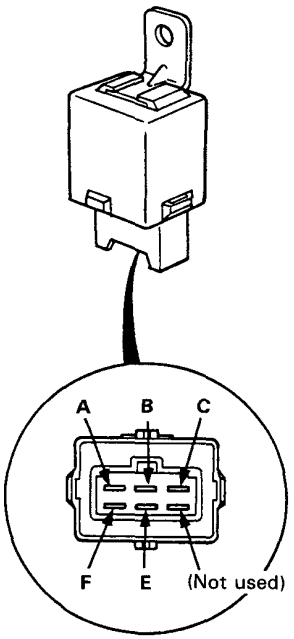

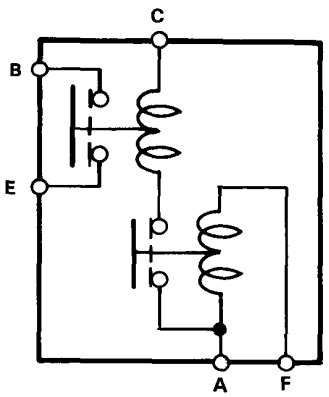

Test

NOTE: Refer to page 16-86 for wiring description of the brake light circuit.

1. Test brake light switch by pushing the brake pedal.
2. If the brake lights do not go on, check the No. 31 (20 A) fuse in the under-hood relay box, and the brake light bulbs in the taillight assembly.
3. If the fuse and bulbs are OK, disconnect the 4-P connector from the brake light switch.

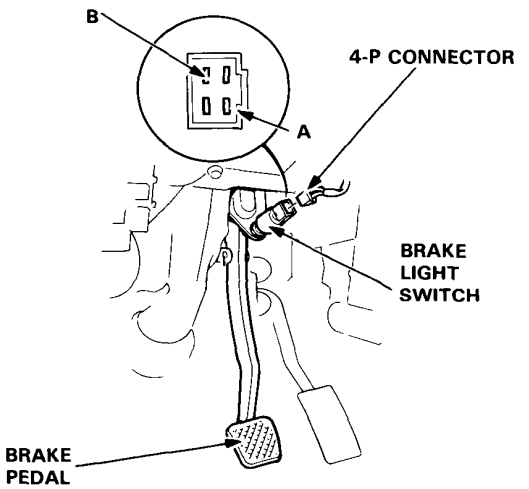

4. Check for continuity between the A and B terminals.
   There should be continuity with the brake pedal pushed.
   - If no continuity, replace the switch or adjust pedal height (see section 13).
   - If there is continuity, but the brake lights do not go on:
     - Poor ground.
       (KG model: G503, Others: G501)
     - An open in the WHT/GRN or GRN/WHT wire.
     - Faulty brake light failure sensors (see page 16-92).

Headlights

Adjustment

NOTE: Adjust the headlights to local requirements.

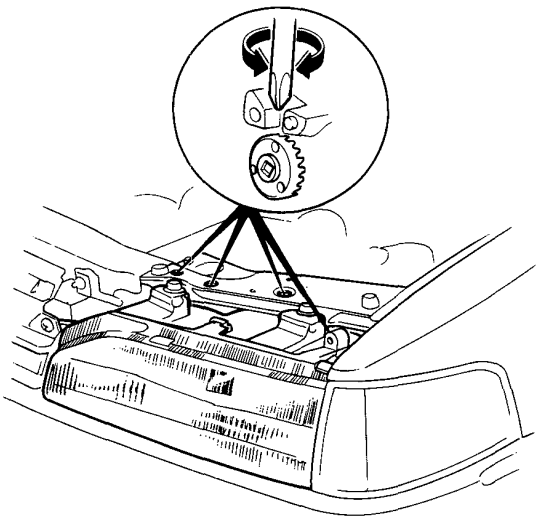

Replacement

CAUTION:

- **Halogen headlights can become very hot in use; do not touch them or the attaching hardware immediately after they have been turned off.**
- **Do not try to replace or clean the headlights with the lights on.**

1. Disconnect the 3-P connector from behind the bulb.
2. Remove the rubber boot from behind the light by pulling the tab.
3. Unhook the retaining spring and remove the bulb.

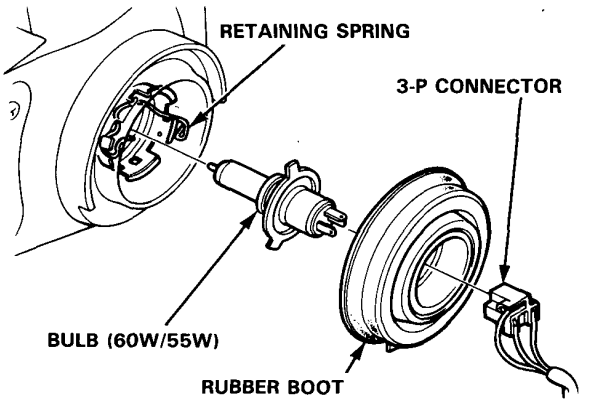

4. Remove the front grille, the front bumper and the front marker light.
5. Remove the 4 mount bolts and 2 screws, then remove the unit.

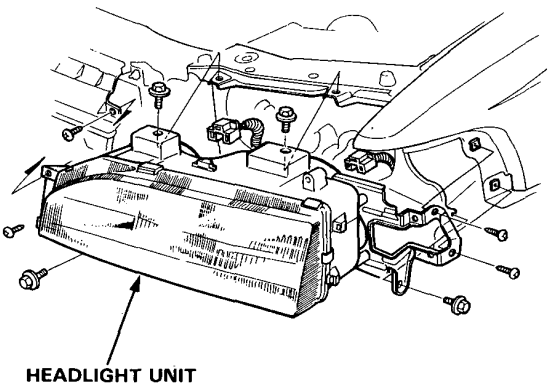

6. After installing the unit, adjust the headlights to local requirements.

Taillight Assembly

Replacement

1. Open the trunk lid and the maintenance cover of the taillight.

2. Turn the socket 45° counterclockwise to remove it from behind the taillight assembly.

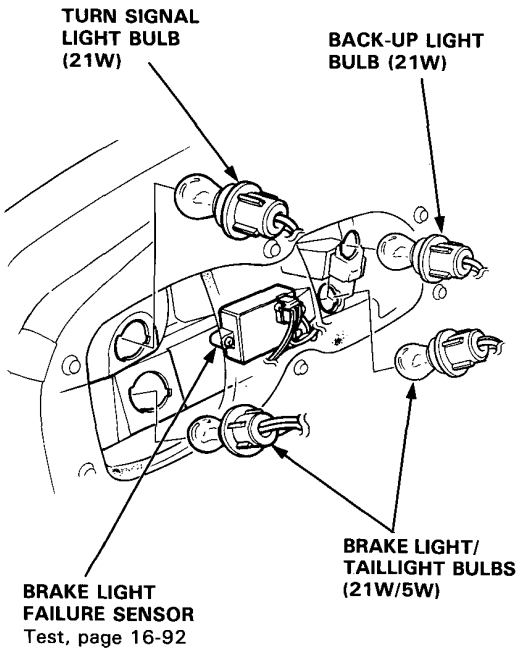

3. Turn the bulb 45° counterclockwise to remove it from the socket.

4. Remove the rear trim panel.

5. Disconnect the 8-P connector from behind the taillight.

6. Remove the 6 mount nuts and the taillight assembly.

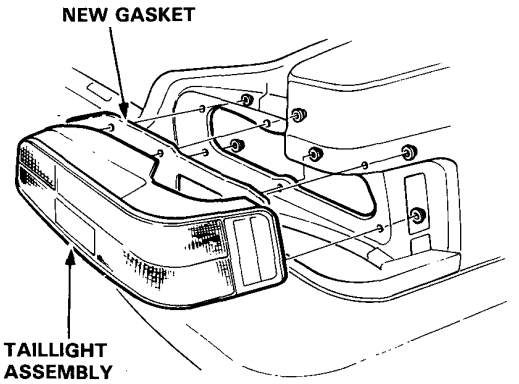

7. Inspect the gasket; replace if it is distorted or overly compressed.

Glove Box Light

Test

1. Open the glove box.
2. Disconnect the 2-P connector from the light.
3. There should be continuity between the ⊕ and ⊖ terminals with a bulb installed.

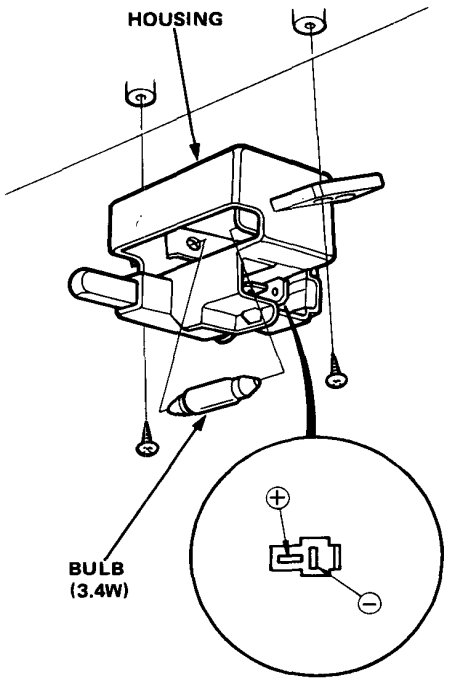

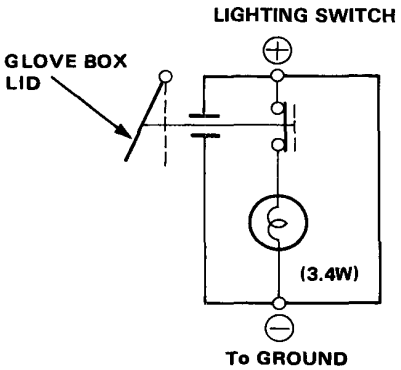

Fuse Box Light

Test

1. Remove the fuse box lid and disconnect the 3-P connector from the light.
2. There should be continuity between the ⊕ and ⊖ terminals with a bulb installed.

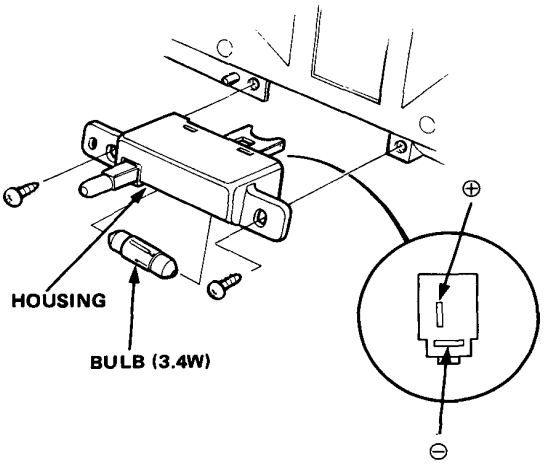

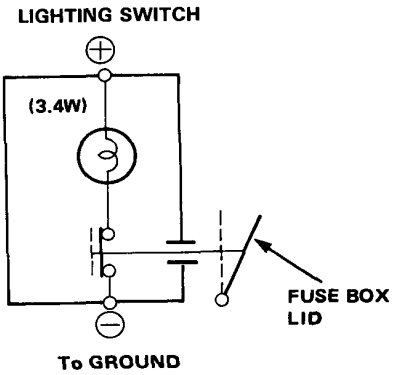

Dome Light

Removal

1. Turn the light switch OFF.
2. Pry off the lens.
3. Remove the 2 nuts and the housing.
4. Disconnect the 3-P connector from the housing.

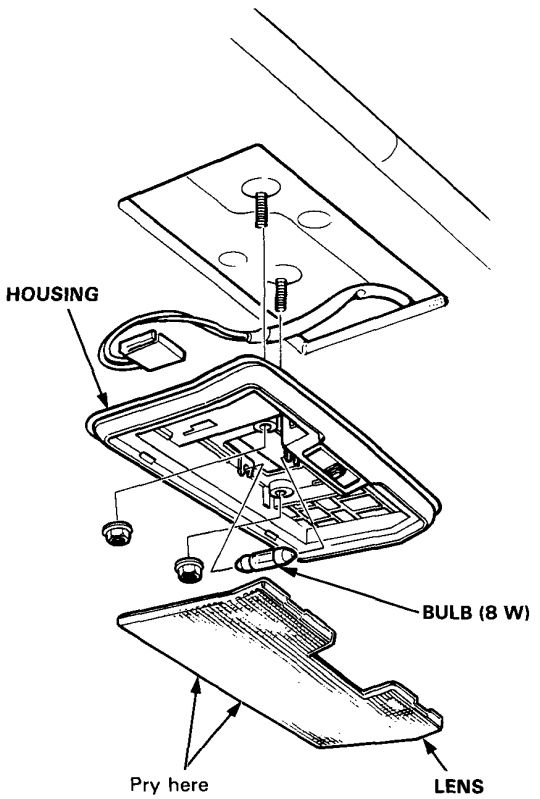

Test

1. Remove the dome light.
2. Check for continuity between the terminals in each switch position according to the table.

Terminal / Position	A	B or B'	C		D
OFF			○	⊘	○
MIDDLE		○	○	⊘	○
ON	○		○	⊘	○

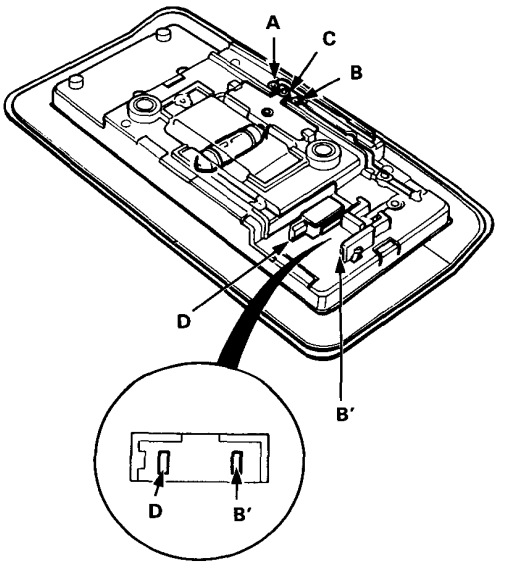

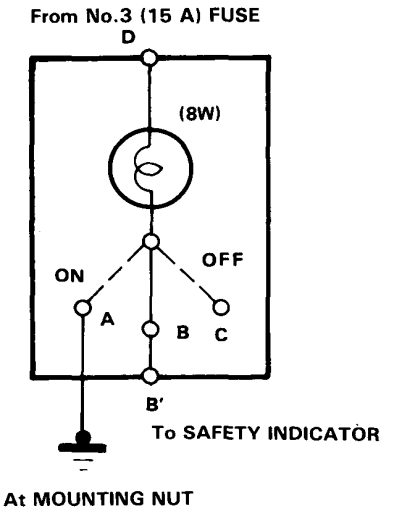

Front Map Light

Removal

1. Turn the light switch OFF.
2. Pry off the lens.
3. Remove the 2 screws, the housing and the map light trim.
4. Disconnect the 3-P connector from the housing.

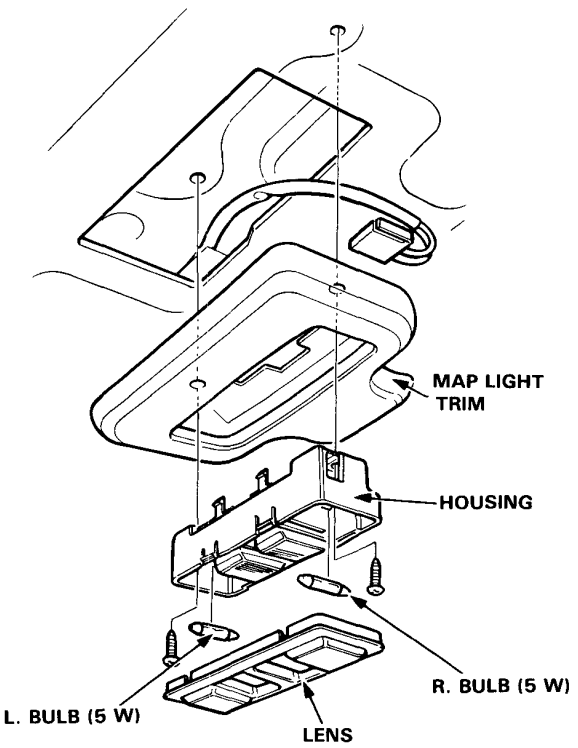

Test

1. Remove the front map light.
2. There should be continuity between the ⊕ and ⊖ terminals, with a bulb installed and the switch ON. There should be no continuity with the switch OFF.

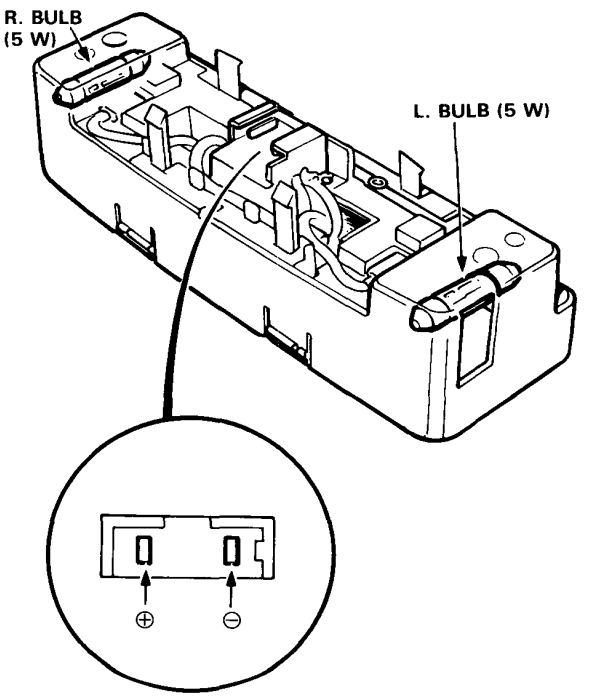

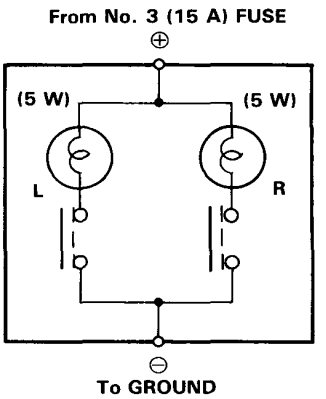

Trunk Light and Latch Switch

Trunk Light Replacement

1. Pry off the trunk light lens from the housing.
2. Pry off the light assembly.
3. Disconnect the 3-P connector from the housing.

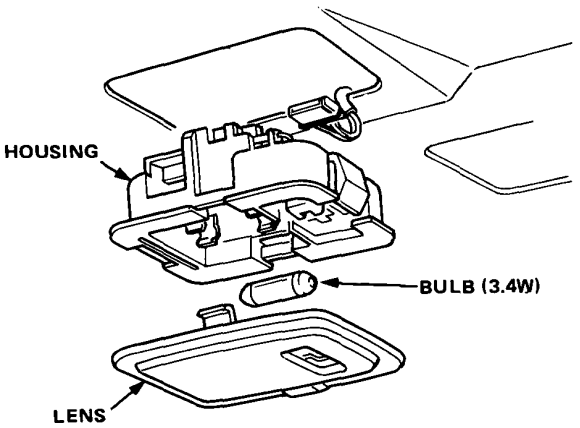

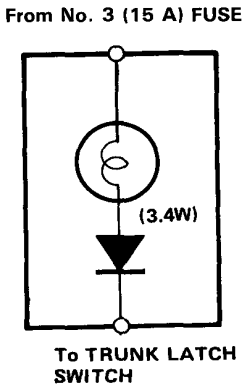

Latch Switch Test/Replacment

1. Open the trunk lid and remove the trunk lid trim panel.
2. Disconnect the connector from the trunk latch.
3. There should be continuity between the No.1 terminal and body ground.

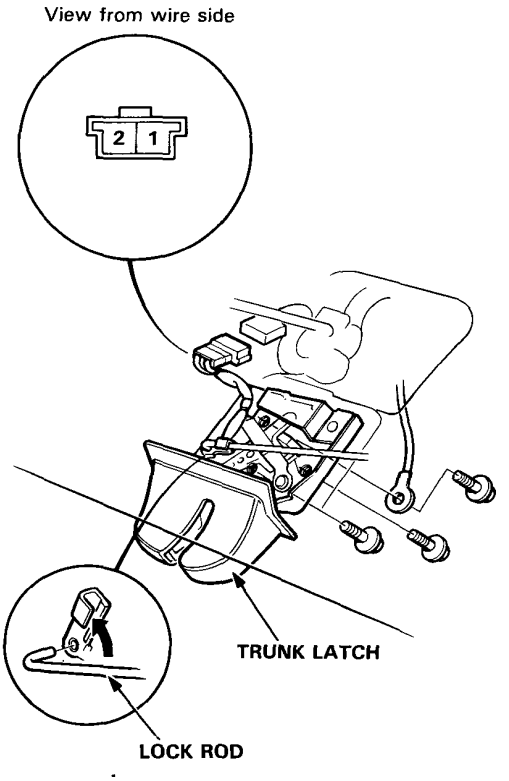

4. If necessary, remove the 3 bolts to pull out the latch from the trunk lid.
5. Disconnect the lock rod from the latch.

Courtesy Lights and Door Switches

Courtesy Light Replacement

NOTE: The bulb or lens alone can be replaced without having to remove the door trim panel.

1. Remove the door trim panel.
2. Remove the 2 screws and the retainer plate to remove the light from the door trim panel.

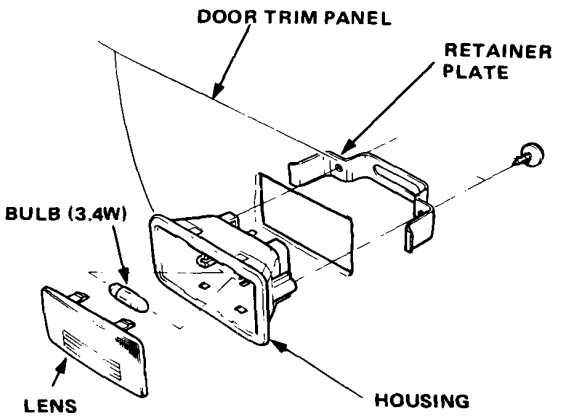

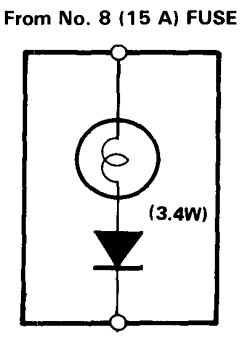

Door Switch Test

1. Open the door.
2. Remove the screw and pull out the door switch.
3. Disconnect the connector from the switch.

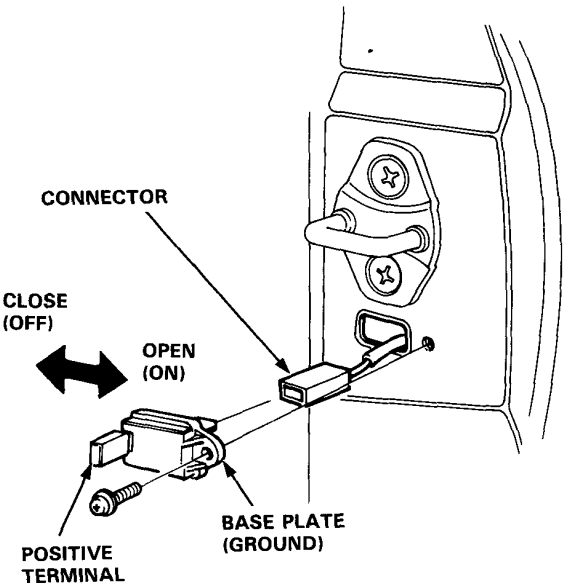

4. There should be continuity between the positive terminal and base plate (ground) with the switch released (door opened).
   There should be no continuity with the switch pushed (door closed).

Back-up Lights

Circuit Diagram

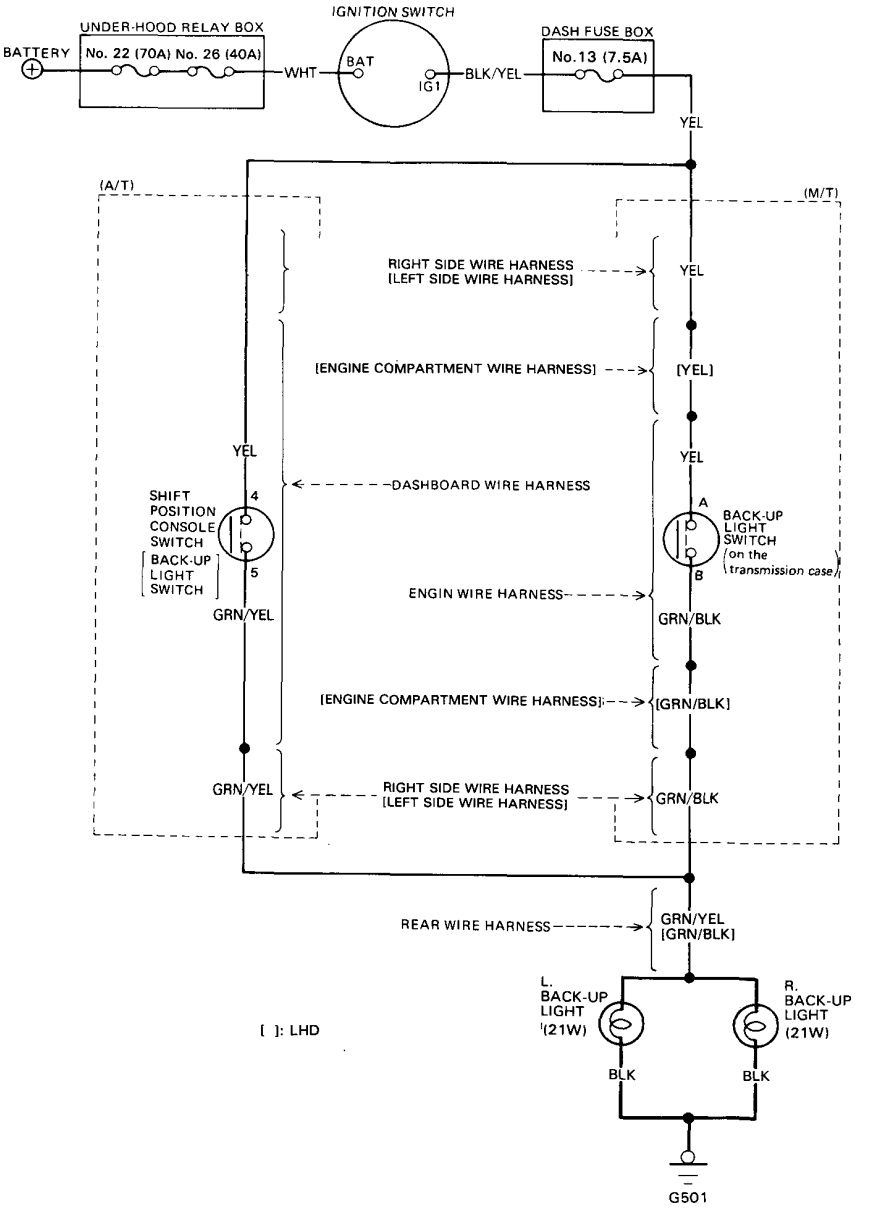

Back-up Lights

Test

Manual Transmission:

1. Test back-up light switch by placing the select lever in reverse and turning the ignition switch to ON.

2. If the back-up lights do not go on, check the No. 13 (7.5 A) fuse in the dash fuse box and the back-up light bulbs in the taillight assembly.

3. If the fuse and bulbs are OK, disconnect the 2-P connector from the back-up light switch.

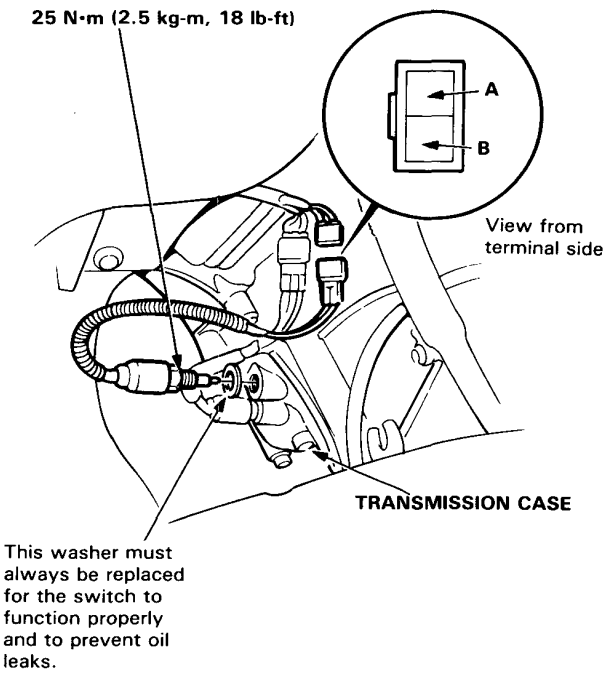

4. Check for continuity between the A and B terminals with the switch installed to the transmission case.
   There should be continuity as the select lever engages "R".

   - If no continuity, replace the switch.

   - If there is continuity, but the back-up lights do not go on:
     - Poor ground (G501).
     - An open in the YEL, GRN/YEL or GRN/BLK wire.

Automatic Transmission:

1. Test back-up light switch by shifting the select lever to "R" and turning the ignition switch ON.

2. If the back-up lights do not go on, check the No. 13 (7.5 A) fuse in the dash fuse box and the back-up light bulbs in the taillight assembly.

3. If the fuse and bulbs are OK, remove the front console and the center instrument panel, then disconnect the 10-P connector from the shift position console switch (back-up light switch).

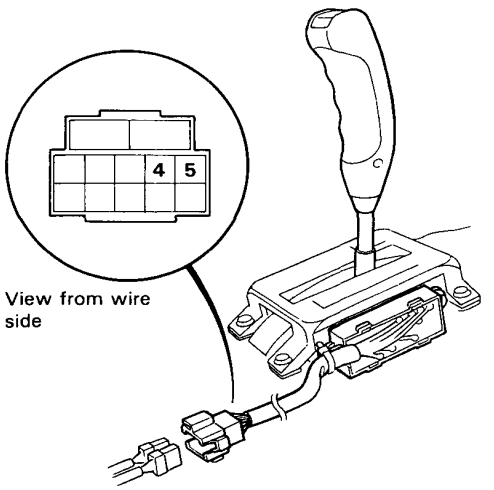

4. Check for continuity between the No.4 and No.5 terminals.
   There should be continuity as the select lever engages "R".

   - If no continuity, replace the switch assembly (see page 16-99).

   - If there is continuity, but the back-up lights do not go on:
     - Poor ground (G501).
     - An open in the YEL, GRN/YEL or GRN/BLK wire.

Turn Signal/Hazard Flasher System

Component Location Index

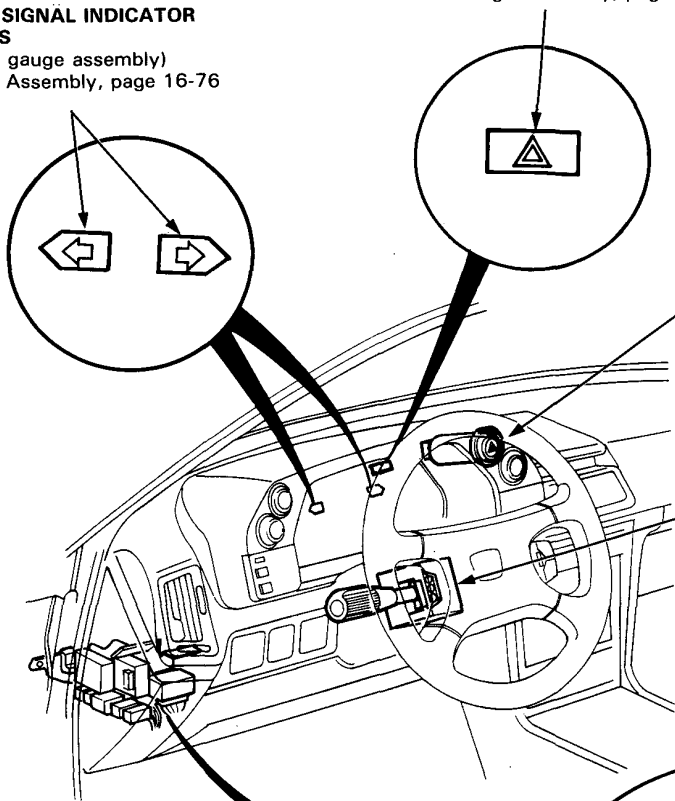

HAZARD WARNING LIGHT
(EC only)
(in the gauge assembly)
Gauge Assembly, page 16-76

TURN SIGNAL INDICATOR LIGHTS
(in the gauge assembly)
Gauge Assembly, page 16-76

HAZARD SWITCH
Removal, page 16-132
Test, page 16-132

LIGHTING/TURN SIGNAL SWITCH
Test, page 16-114
Replacement, page 16-114

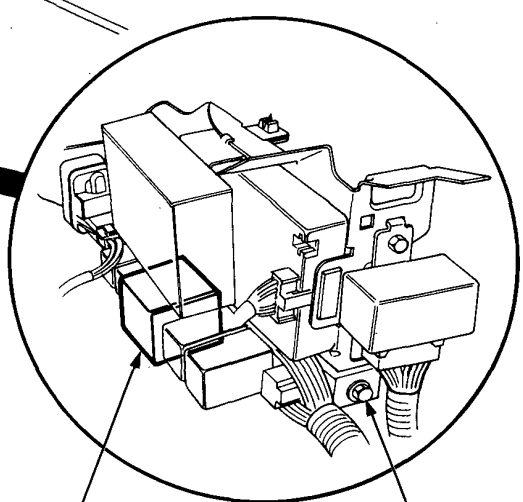

TURN SIGNAL/HAZARD RELAY
Input Test, page 16-131

DASH RELAY HOLDER
(Located under dash, driver's side)

Turn Signal/Hazard Flasher System

Circuit Diagram

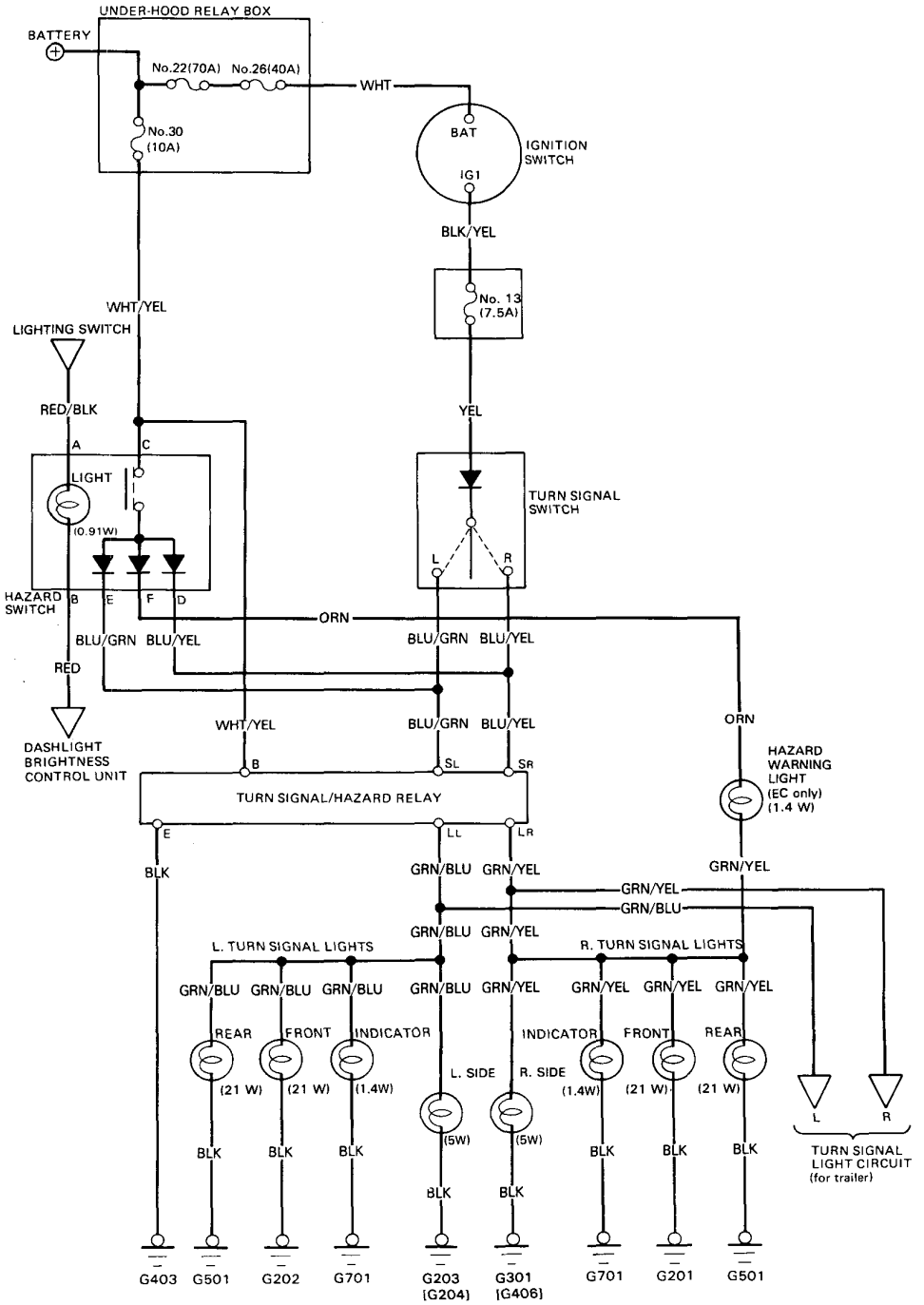

[ ]: RHD

Turn Signal/Hazard Relay Input Test

Remove the dashboard lower panel, and the dash relay holder from the bracket to facilitate the input test, then remove the turn signal/hazard relay from the dash relay holder.
Make the following input tests at the relay holder pins. If all tests prove OK, but the relay fails to work, replace the turn signal/hazard relay.

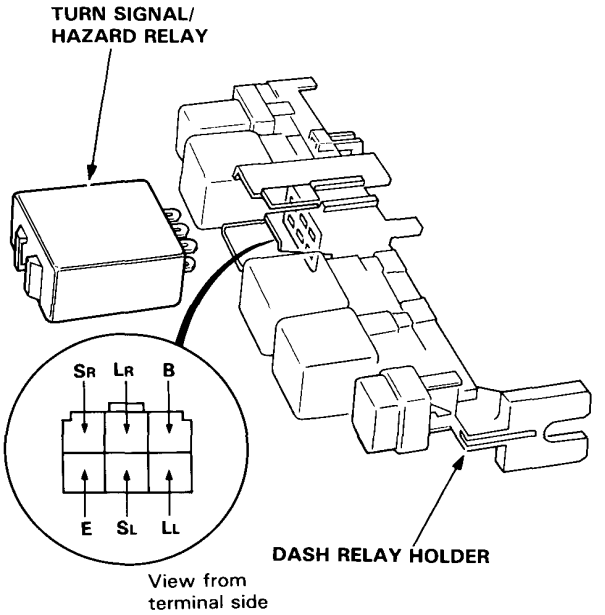

No.	Terminal	Test condition	Test: desired result	Possible cause (if result is not obtained)
1	E	Under all conditions.	Check for continuity to ground: should be continuity.	• Poor ground (G403). • An open in the BLK wire.
2	B	Under all conditions.	Check for voltage to ground: should be battery voltage.	• Blown No. 30 (10 A) fuse. • An open in the WHT/YEL wire.
3	SR	Ignition switch ON and turn signal switch in R.	Check for voltage to ground: should have battery voltage.	• Blown No. 13 (7.5 A) fuse. • Faulty turn signal switch. • An open in the YEL, BLU/GRN or BLU/YEL wire.
	SL	Ignition switch ON and turn signal switch in L.		
4	SR	Hazard switch ON.	Check for voltage to ground: should be battery voltage.	• Faulty hazard switch. • An open in the BLU/GRN or BLU/YEL wire.
	SL			
5	LR	Connect the B terminal to the LR terminal.	R. Turn signal lights should come on as the battery is connected.	• Blown bulb. • Poor ground. (G201, G301 [G406], G501 or G701) • An open in the GRN/YEL wire.
6	LL	Connect the B terminal to the LL terminal.	L. Turn signal lights should come on as the battery is connected.	• Blown bulb. • Poor ground. (G202, G203 [G204], G501 or G701) • An open in the GRN/BLU wire.

[ ]: RHD

Turn Signal/Hazard Flasher System

Hazard Switch Removal

1. Remove the 4 screws, then remove the instrument panel from the dashboard.

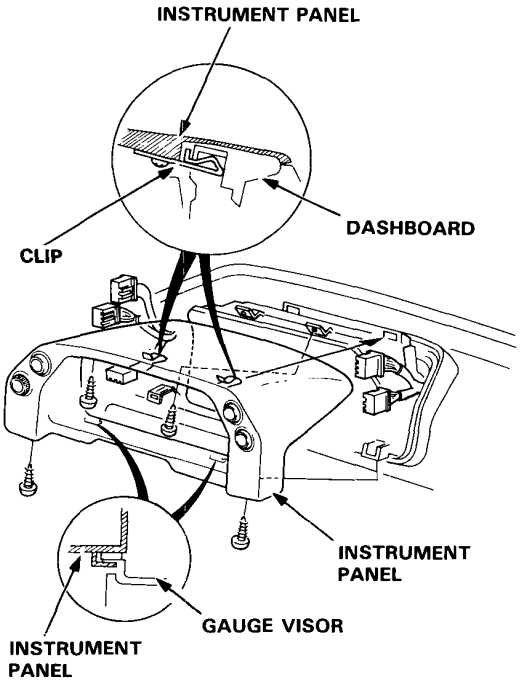

2. Remove the screw from the rear of the instrument panel, then remove the switch.

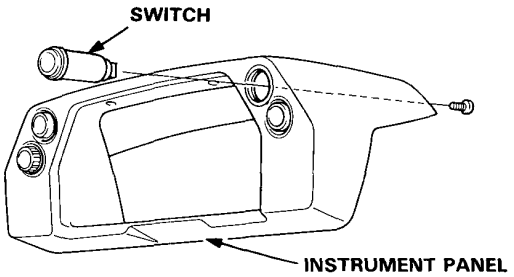

3. Turn the socket 45° counterclockwise to remove it.

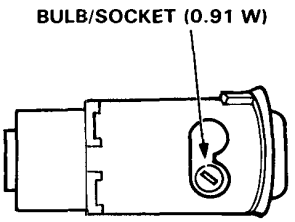

Hazard Switch Test

1. Remove the instrument panel from the dashboard.
2. Check for continuity between the terminals in each switch position according to the table.

Terminal / Position	C		D	E	F	A		B
OFF								
ON	○	▶|	○			○	○	○
	○	▶|		○				
	○	▶|			○			

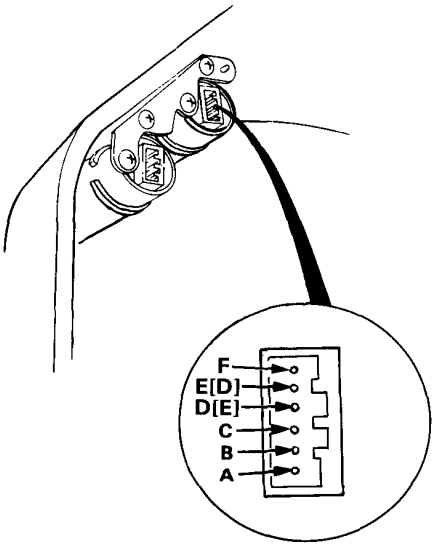

[ ]: RHD

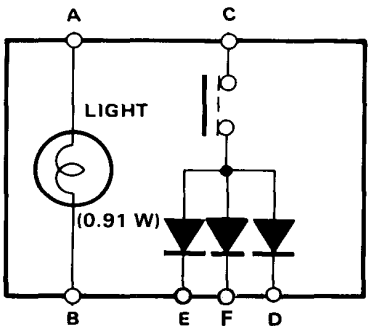

Dashlight Brightness Control

Component Location Index

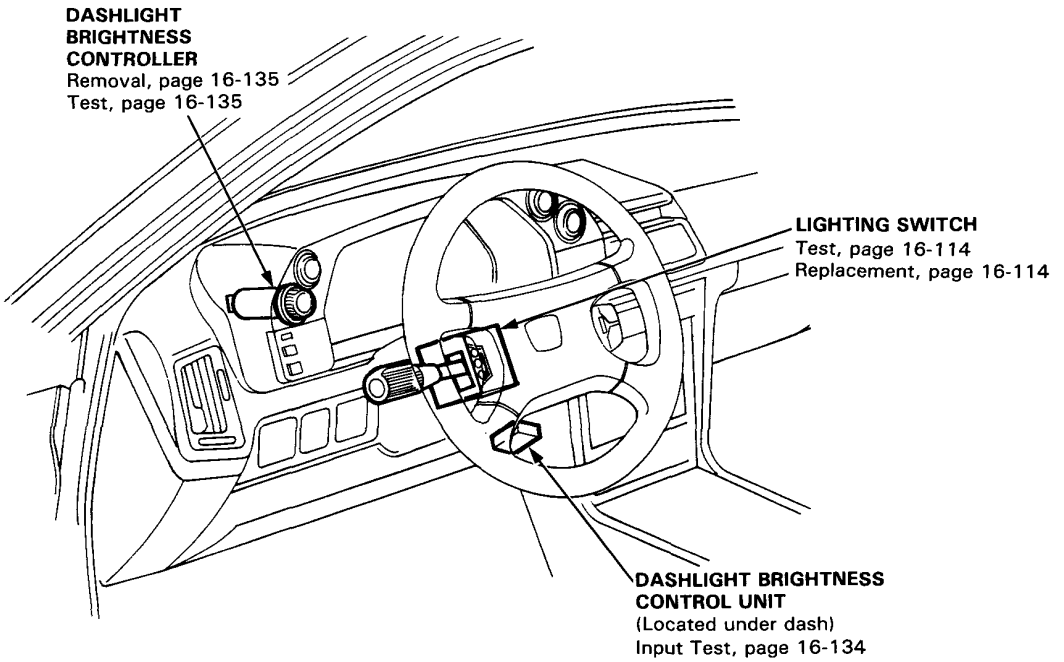

Circuit Diagram

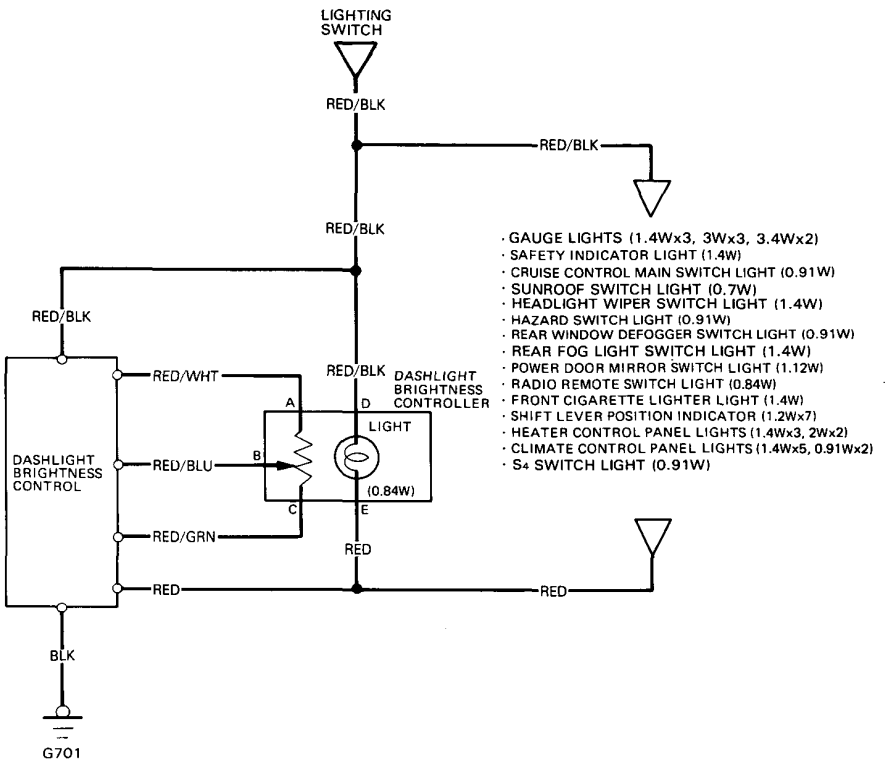

Dashlight Brightness Control

Control Unit Input Test

Remove the dashboard lower panel and disconnect the 6-P connector from the control unit.
Make the following input tests at the harness pins. If all tests prove OK, yet the dash lights still cannot be controlled, check the connector for a good connection. If OK, substitute a known-good control unit and re-check.

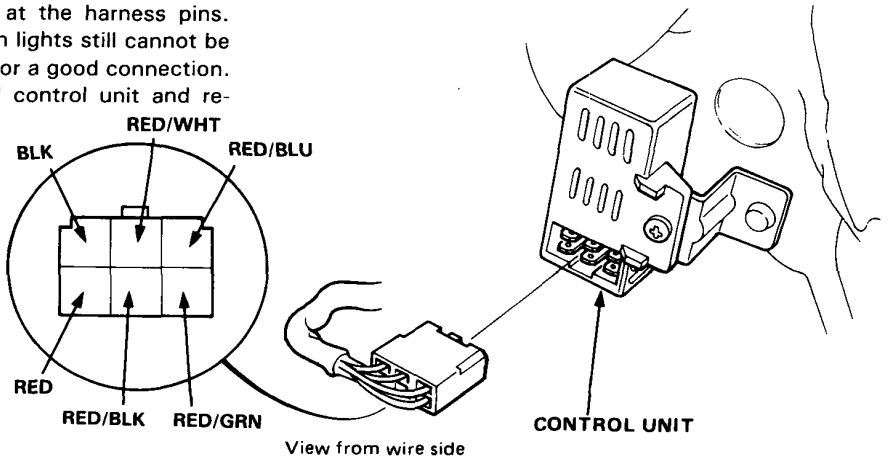

No.	Wire	Test condition	Test: desired result	Possible cause (if result is not obtained)
1	BLK	Under all conditions.	Check for continuity to ground: should be continuity.	• Poor ground (G701). • An open in the wire.
2	RED/BLK	Lighting switch ON.	Check for voltage to ground: should be battery voltage.	• Blown No. 7 (15 A) fuse. • Faulty lighting switch. • An open in the wire.
3	RED	Lighting switch ON.	Attach to ground: Dash lights should come on full bright.	• An open in the RED/BLK or RED wire.
4	RED/GRN or RED/WHT	Adjusting dial rotated.	Check for resistance between the RED/GRN and RED/WHT terminals: should be 8—12 kΩ at all time.	• Faulty controller. • An open in the wires.
5	RED/BLU and RED/WHT	Adjusting dial rotated.	Check for resistance between the RED/BLU and RED/WHT terminals: should vary from 0 to 10,000 ohms as the dial is rotated.	

Controller Removal

1. Remove the 4 screws, then remove the instrument panel from the dashboard.

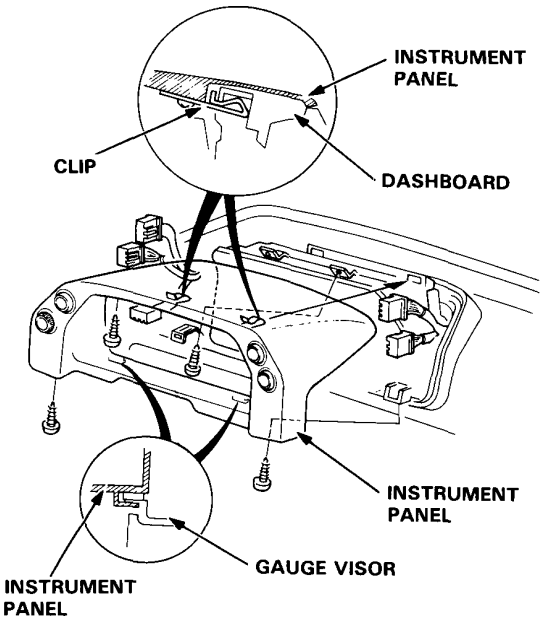

2. Remove the screw from the rear of the instrument panel, then remove the controller.

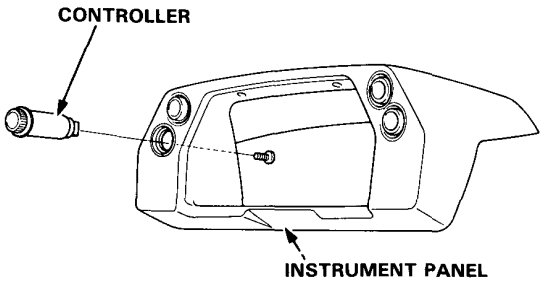

3. Turn the socket 45° counterclockwise to remove it.

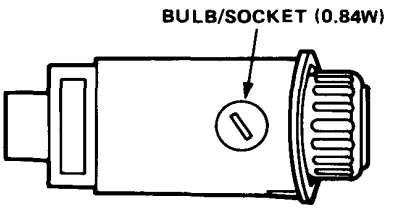

Controller Test

1. Remove the instrument panel from the dashboard.
2. Measure resistance between the A and C terminals.

   Resistance: 8,000—12,000 ohms

   NOTE: Resistance will vary slightly with temperature.

3. Measure resistance between the B and C terminals while rotating the adjusting dial.
   Resistance should vary from 0 to 10,000 ohms as the dial is rotated.

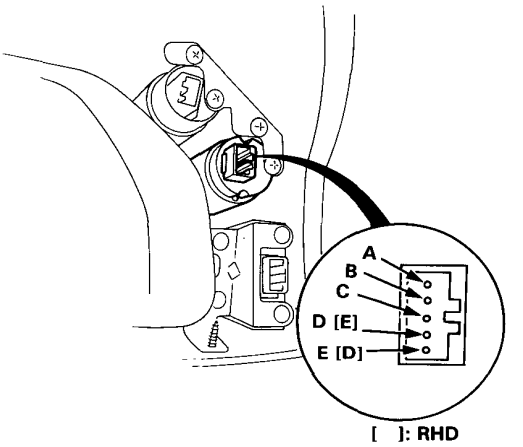

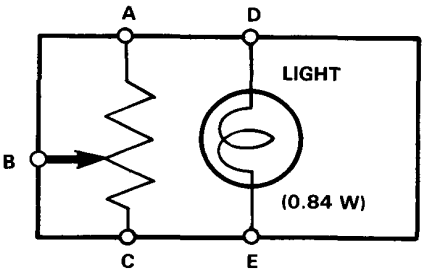

Entry Light Timer System

Component Location Index

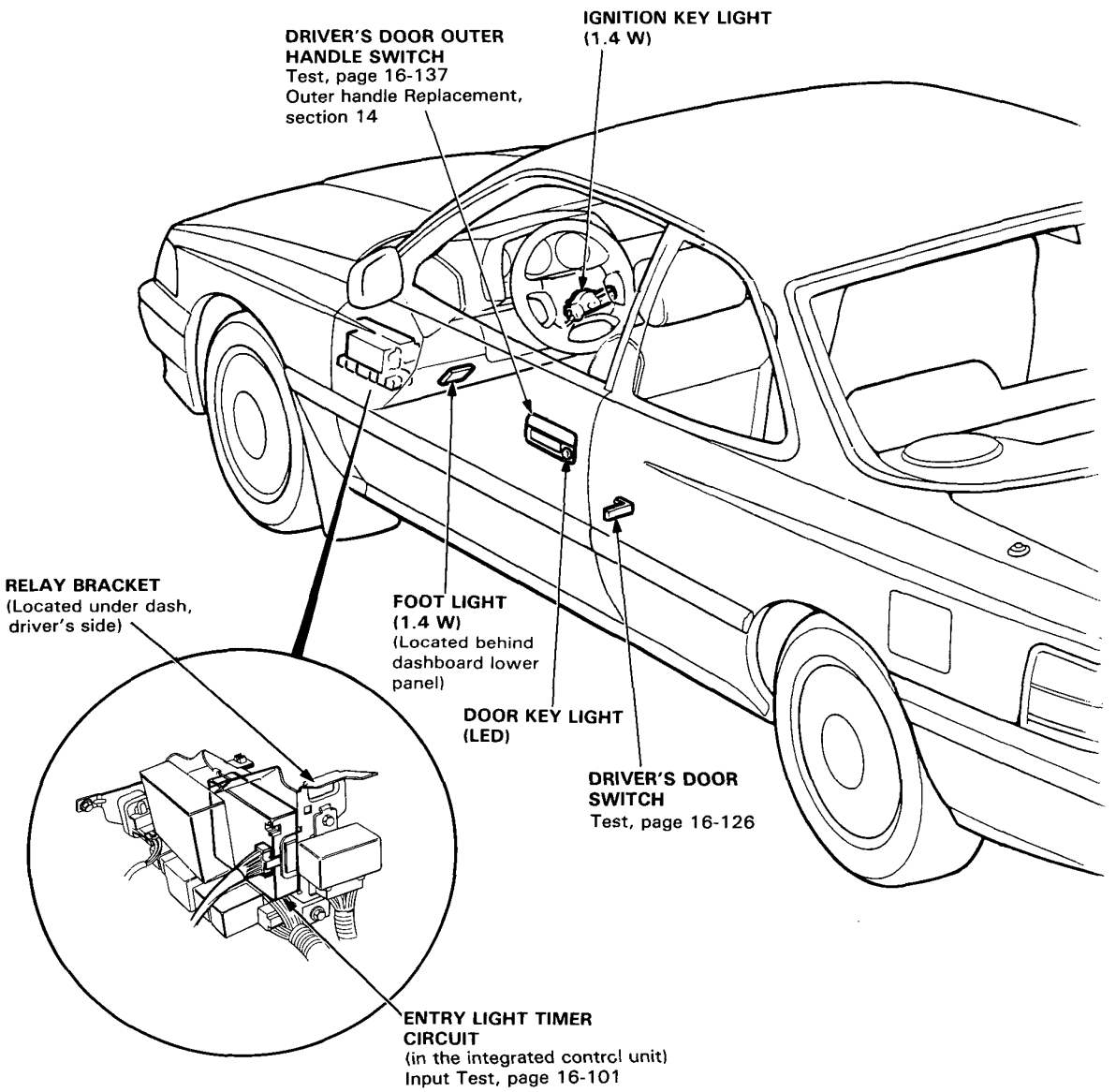

Circuit Diagram

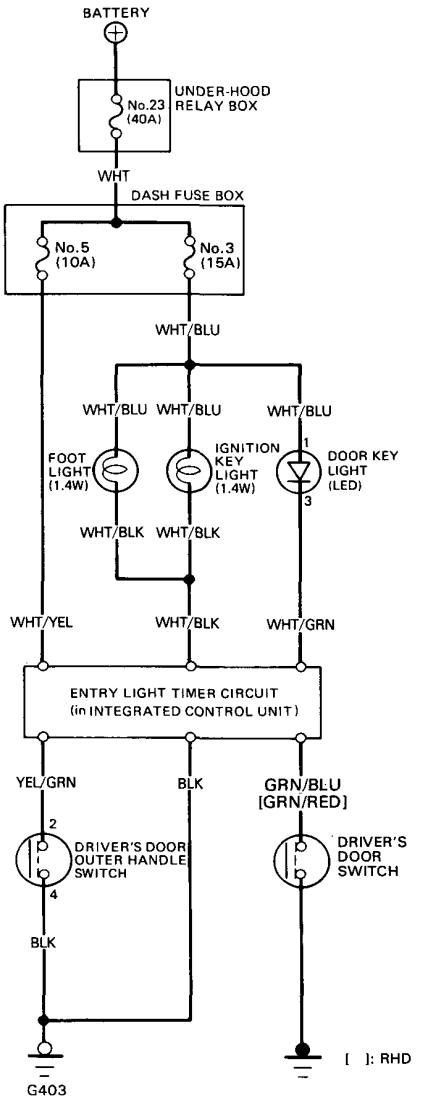

Outer Handle Switch Test

1. Remove the driver's door trim panel.
2. Disconnect the 4-P connector from the outer handle switch.
3. There should be continuity between the No.2 and No.4 terminals when the driver's door outer handle is pulled.
   There should be no continuity when the handle is released.

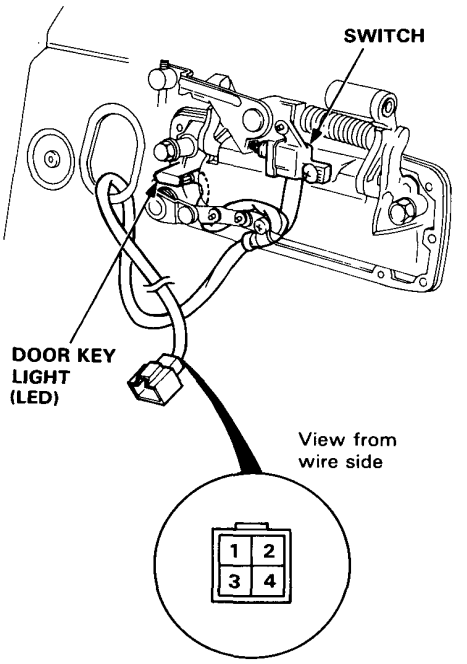

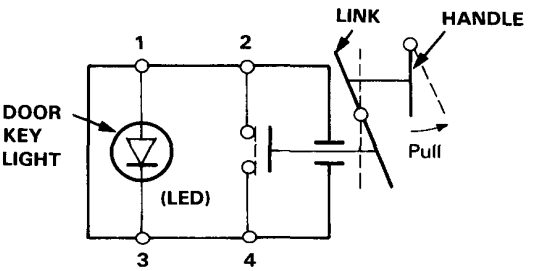

Stereo Sound System

Component Location Index

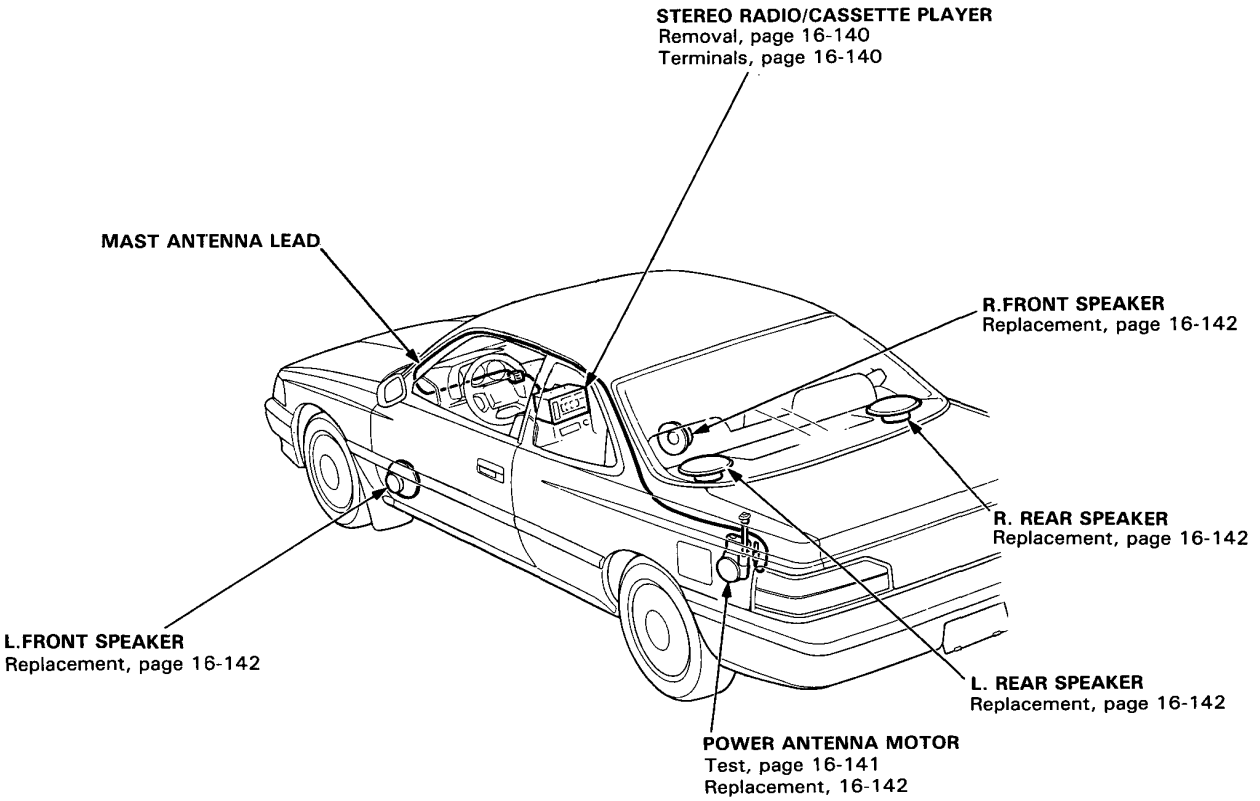

Circuit Diagram

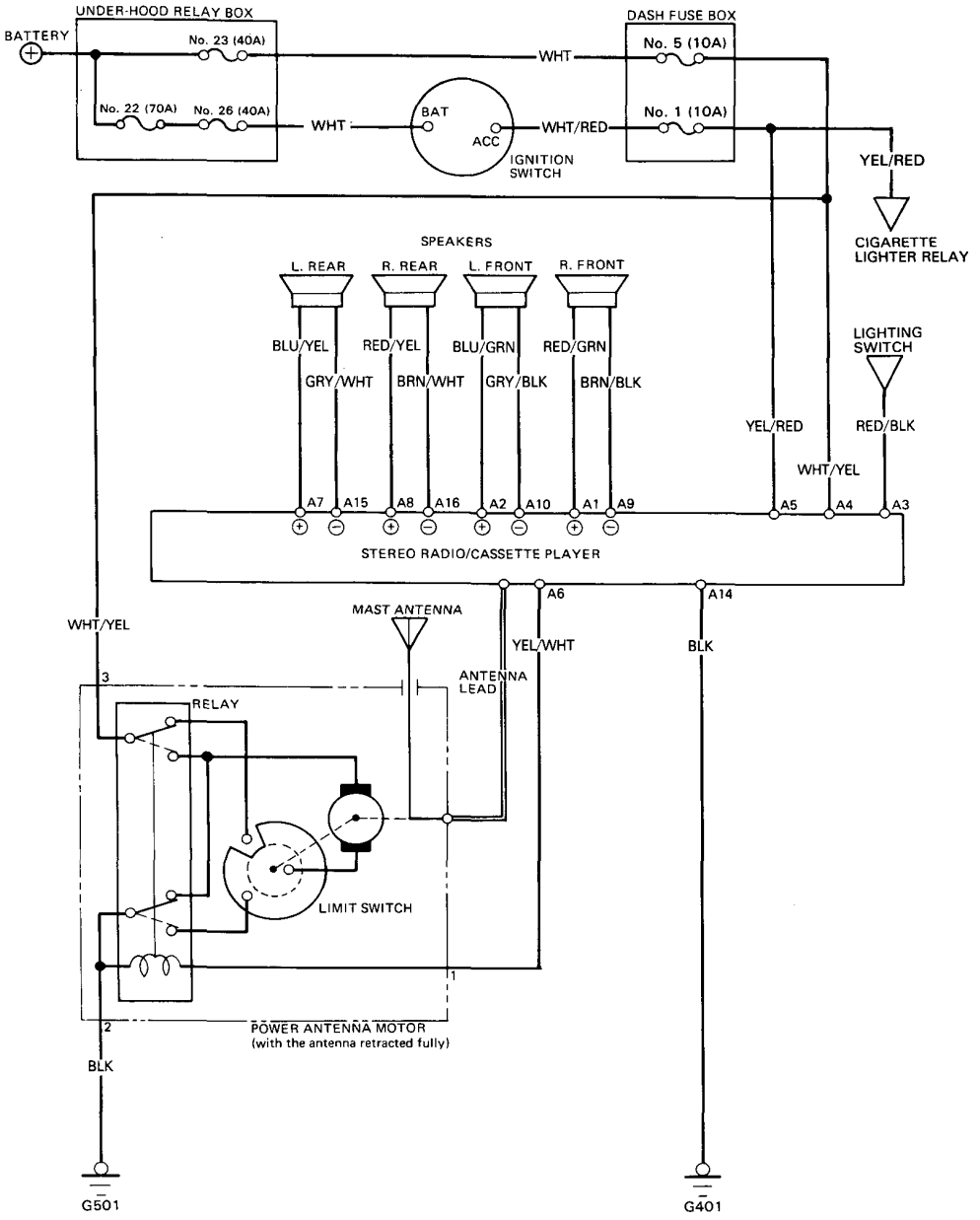

Stereo Sound System

Unit Removal

A-Type:

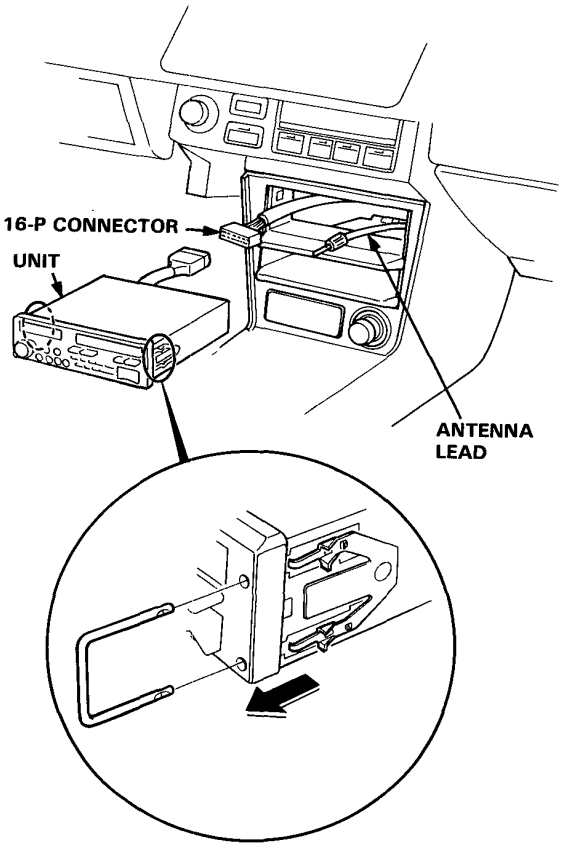

B-Type: Remove the front console to loose the screws.

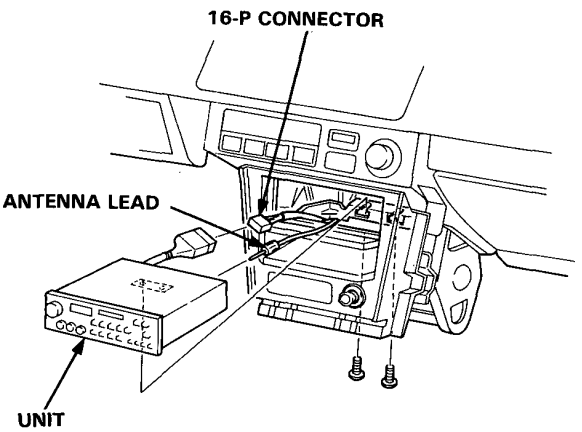

Unit Terminals

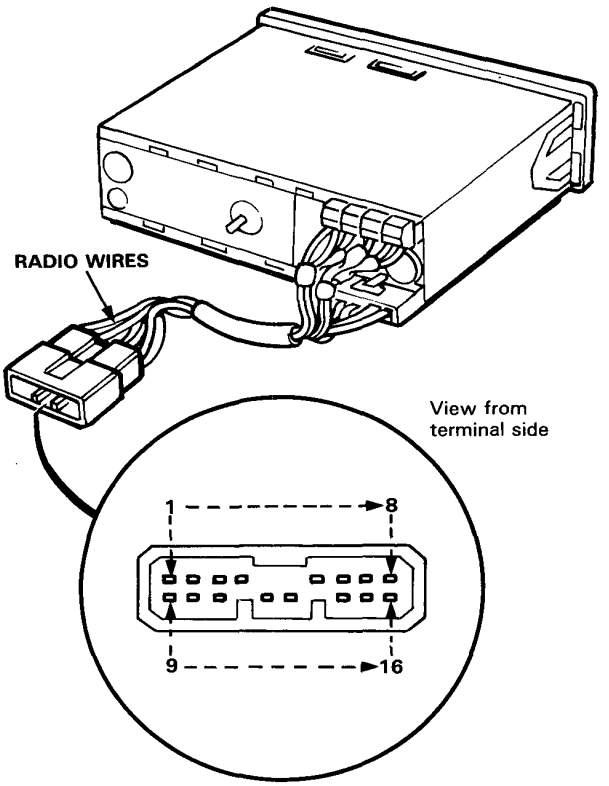

Terminal	Wire	Destination
1	RED/GRN	Right front speaker ⊕
2	BLU/GRN	Left front speaker ⊕
3	RED/BLK	Light-on signal
4	WHT/YEL	Memory power (hot at all time)
5	YEL/RED	Switched power (hot with key on)
6	YEL/WHT	Power antenna
7	BLU/YEL	Left rear speaker ⊕
8	RED/YEL	Right rear speaker ⊕
9	BRN/BLK	Right front speaker ⊖
10	GRY/BLK	Left front speaker ⊖
11	—	(Not used)
12	—	(Not used)
13	—	(Not used)
14	BLK	Ground
15	GRY/WHT	Left rear speaker ⊖
16	BRN/WHT	Right rear speaker ⊖

NOTE: The wire color of No. 4 terminal (WHT/YEL) changes to WHT/BLU in case of the radio wires.

Power Antenna Motor Test

1. Remove the trunk side trim panel.

2. Disconnect the 3-P connector from the motor and remove the connector from its clamp.

3. First check power to the motor at the harness pins: There should be battery voltage between the WHT/YEL (+) and BLK (−) terminals all the time. There should be battery voltage between the YEL/WHT (+) and BLK (−) terminals only with the ignition and radio switched ON.

4. Test motor operation:

   FULL EXTEND: Connect battery positive to the No.3 and No.1 terminals and negative to the No.2 terminal.
   RETRACTED: Then disconnect battery positive from the No.1 terminal.

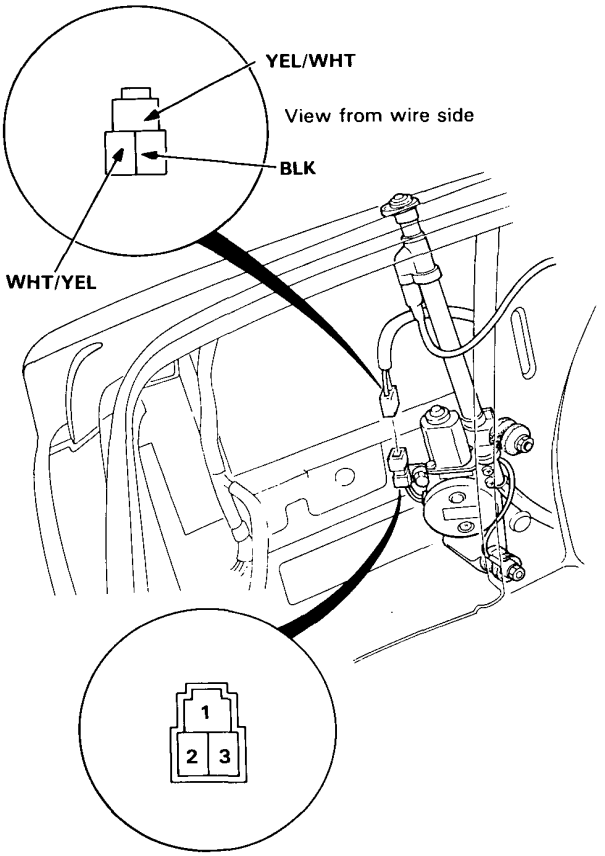

5. If the motor fails to operate properly, replace it.

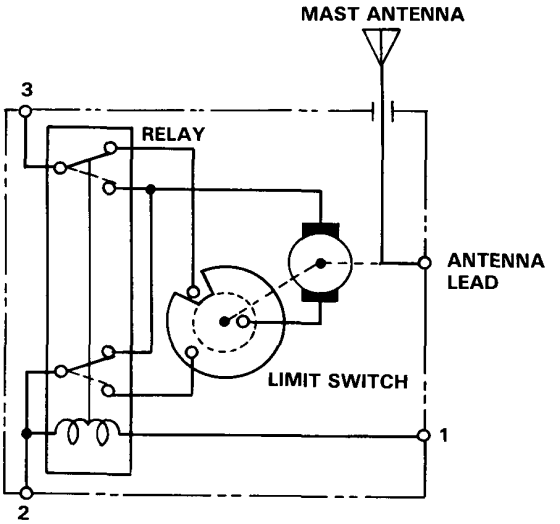

Power Antenna Motor Replacement

1. Remove the trunk side trim panel.
2. Disconnect the 3-P connector and antenna lead from the motor, then remove the special nut and 2 mount nuts to take out the motor with the mast antenna.

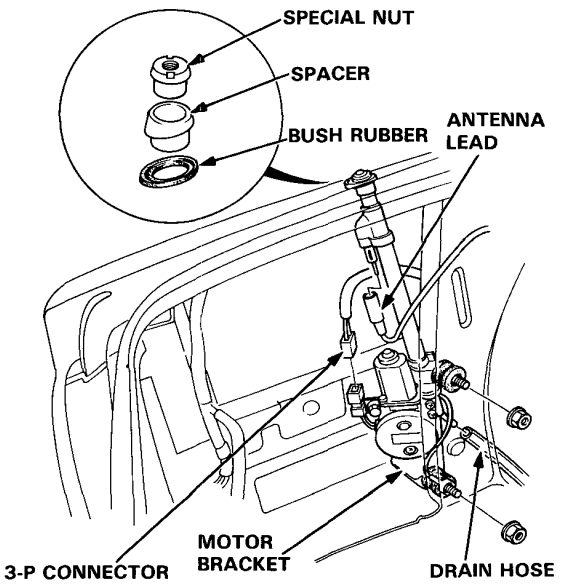

Speaker Replacement

Front Speakers:

1. Remove the door trim panel.
2. Remove the 5 screws, then disconnect the 2-P connector from the speaker assembly.

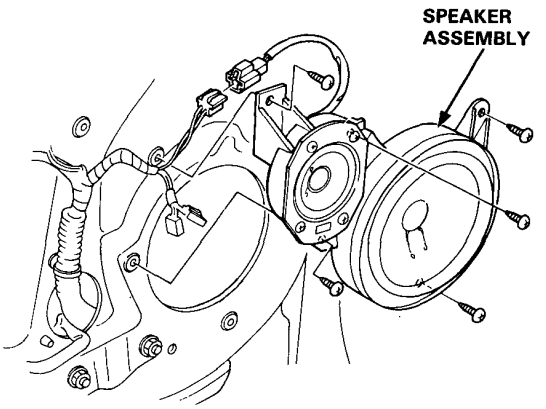

Rear Speakers:

1. Remove the speaker cover.
2. Remove the 3 screws, then disconnect the wires from the speaker.

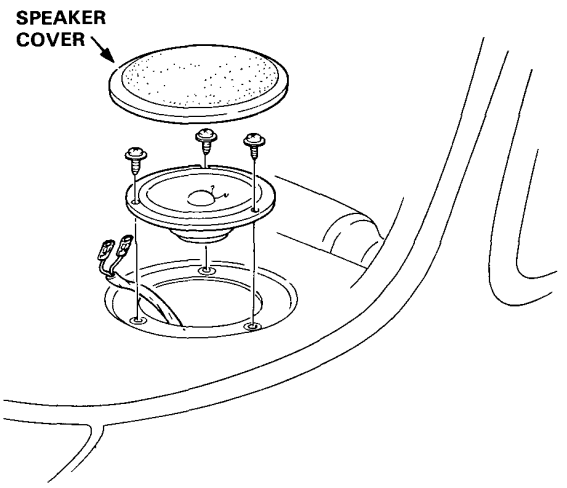

Clock

Removal

1. Remove the 4 screws and the center dash compartment from the dashboard.
2. Remove the 2 screws from both sides of the clock, then disconnect the 6-P connector from the clock.

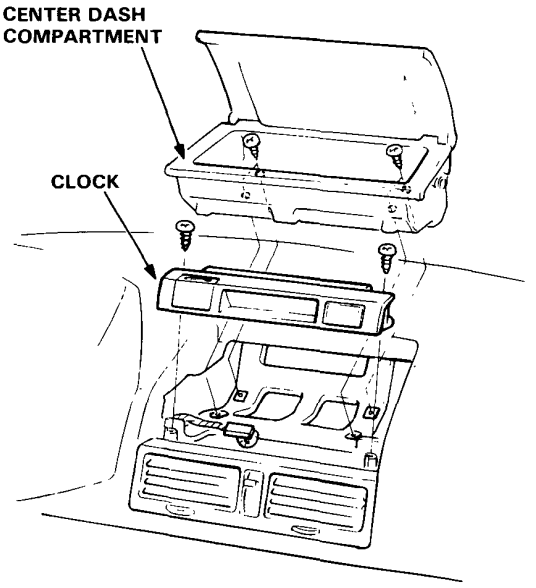

Terminals

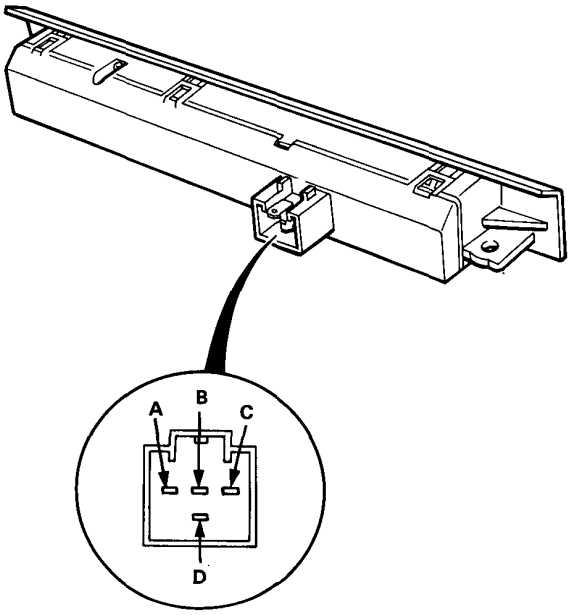

Terminal	Wire	Destination
A	WHT/YEL	Memory power (hot at all time)
B	YEL	Switched power (hot with key on)
C	RED/BLK	Light-on signal
D	BLK	Ground

Horns

Circuit Diagram

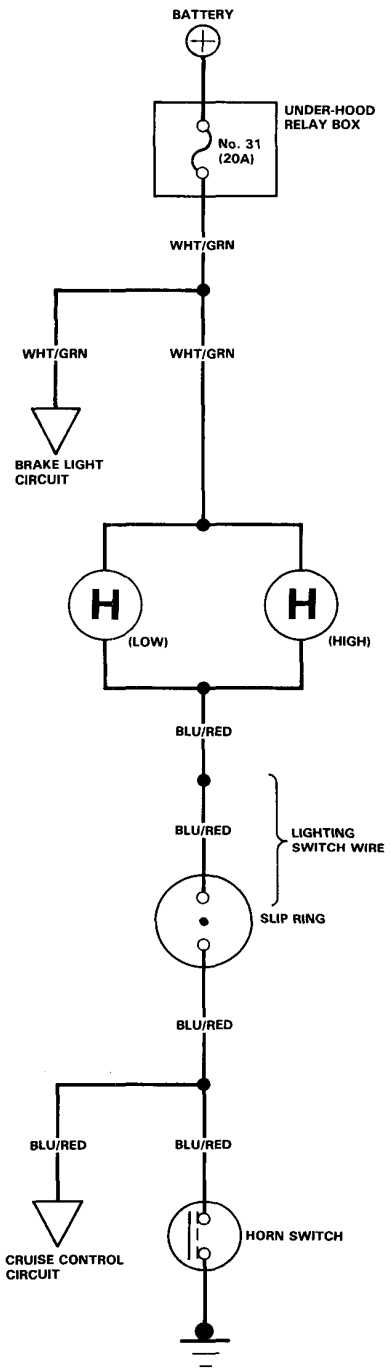

Horn Test

1. Remove the front bumper.
2. Disconnect the wires from the horn.
3. Test the horn by connecting battery voltage to the A and B terminals. The horn should sound.
4. If the horn fails to sound, replace it.

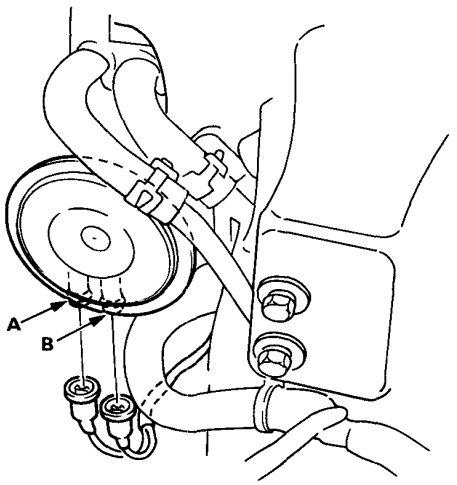

Switch Test

1. Remove the dashboard lower panel and disconnect the 13-P connector from the side wire harness.

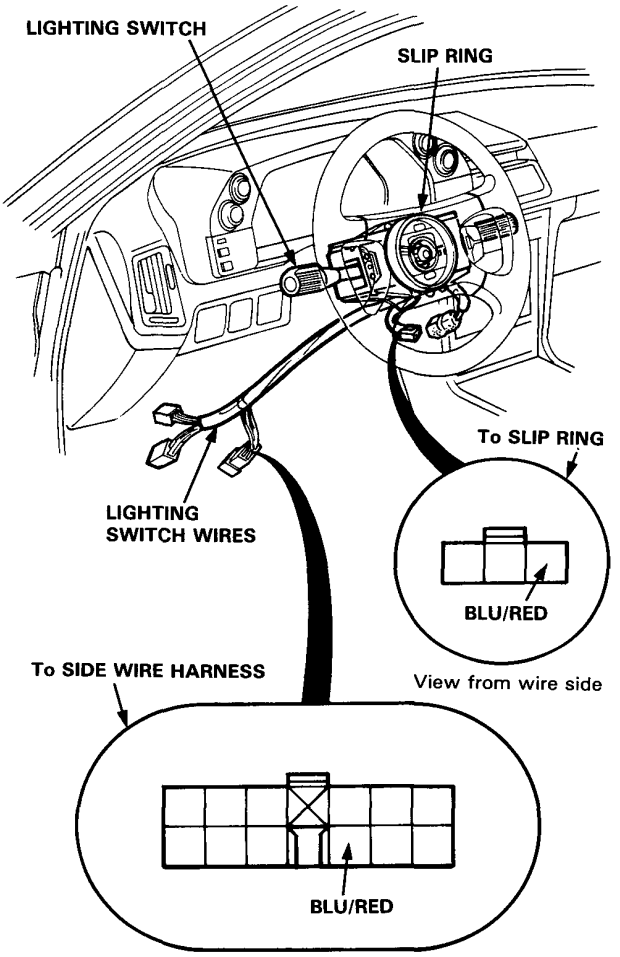

2. Check for continuity between the BLU/RED terminal of the 13-P connector and body ground with the horn switch pressed.
   There should be continuity.

   - If there is continuity, the horn switch is OK.
   - If there is no continuity, remove the steering wheel, then turn it over and go to step 3.

3. Check for continuity between the A terminal and the hub core on the steering wheel with the horn switch pressed.
   There should be continuity.

With cruise control:

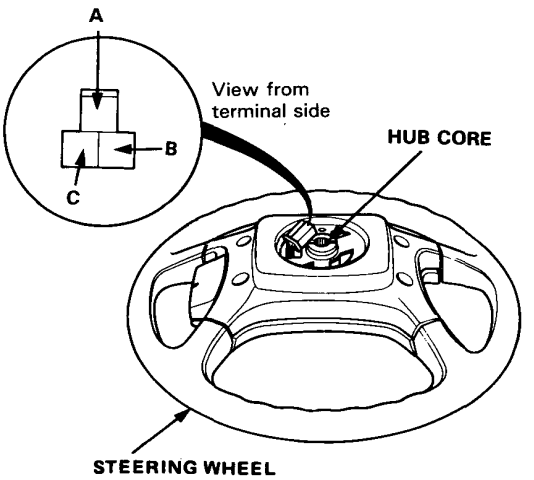

- If there is no continuity, repair the horn switch.
- If there is continuity, remove the steering column lower cover and disconnect the 3-P connector from the slip ring, then check for *open in the lighting switch wire* (BLU/RED). If the wire is OK, check the slip ring (see page 16-221).

Trunk Opener

Circuit Diagram

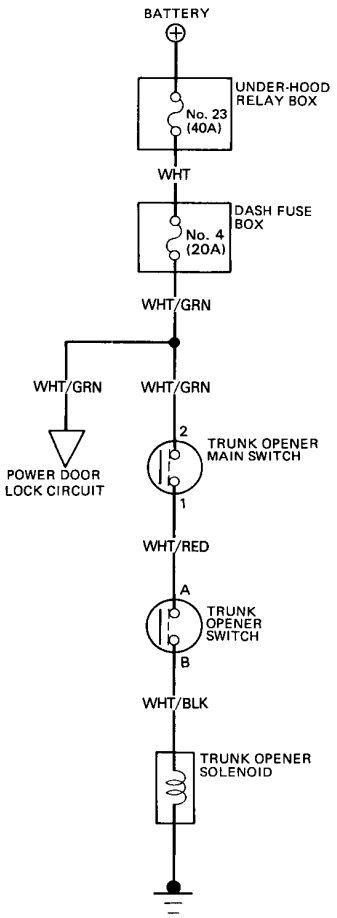

Main Switch Test

1. Remove the glove box to disconnect the 2-P connector from the switch.

2. There should be continuity betwen the No.1 and No.2 terminals with the main switch ON.
   There should be no continuity with the switch OFF.

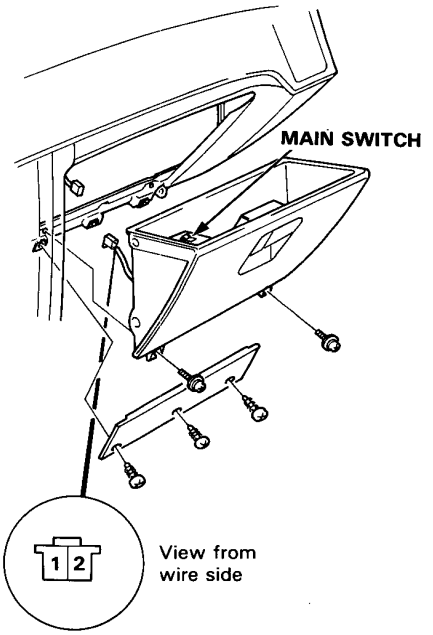

3. If necessary, remove the side panel, then replace the switch.

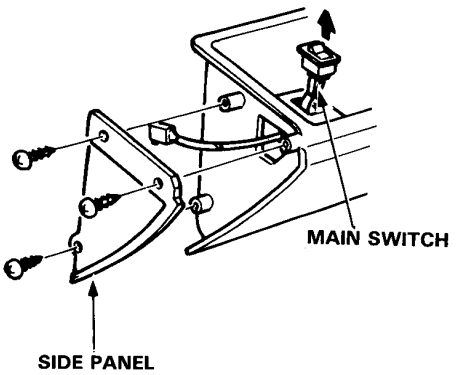

Opener Switch Test

1. Remove the door trim panel, then push out the switch from behind the door trim panel as shown.

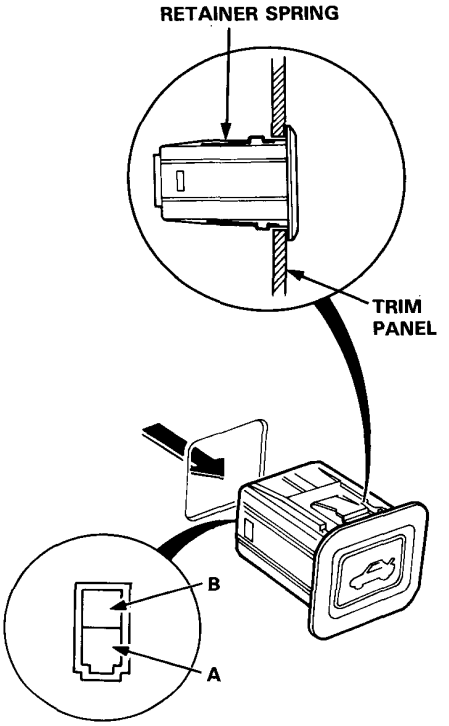

2. There should be continuity between the A and B terminals with the switch ON.
   There should be no continuity with the switch OFF.

Solenoid Test/Replacement

1. Open the trunk lid and remove the trunk lid trim panel.
2. Disconnect the connector from the solenoid.
3. With battery positive connected to the positive terminal and negative to the attaching bracket (ground), the link and rods should move to the direction of "➡."

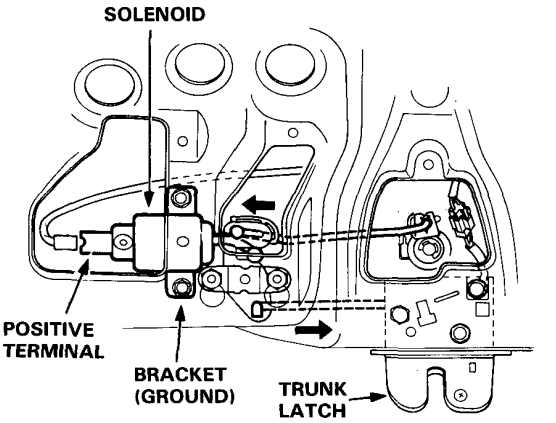

4. If necessary, remove the 2 bolts, then unhook the solenoid rod from the link to remove the solenoid.

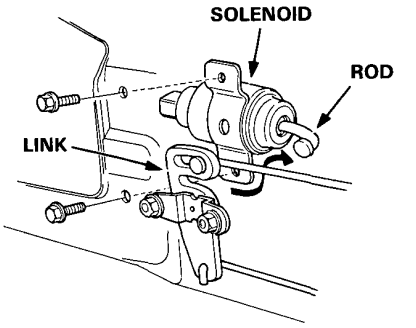

Cigarette Lighter

Component Location Index

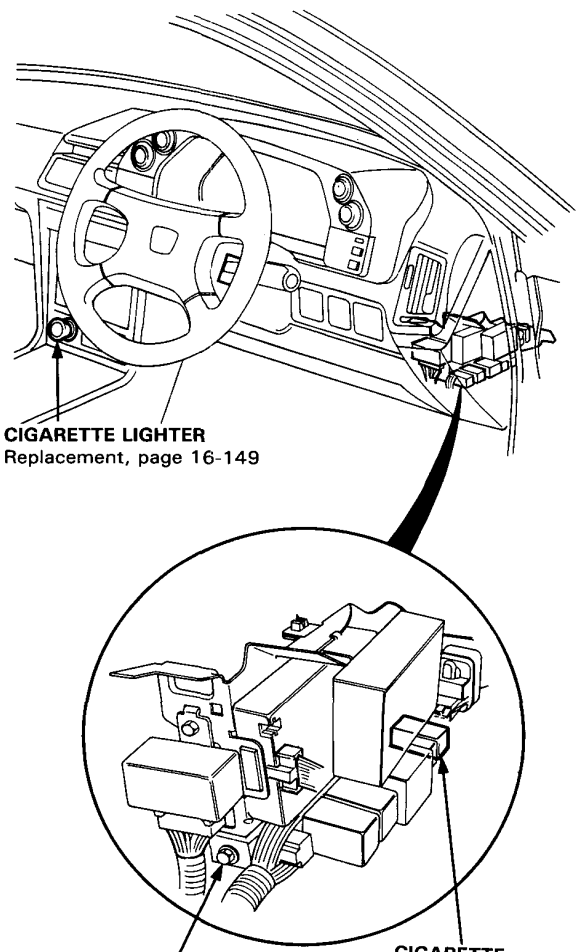

Circuit Diagram

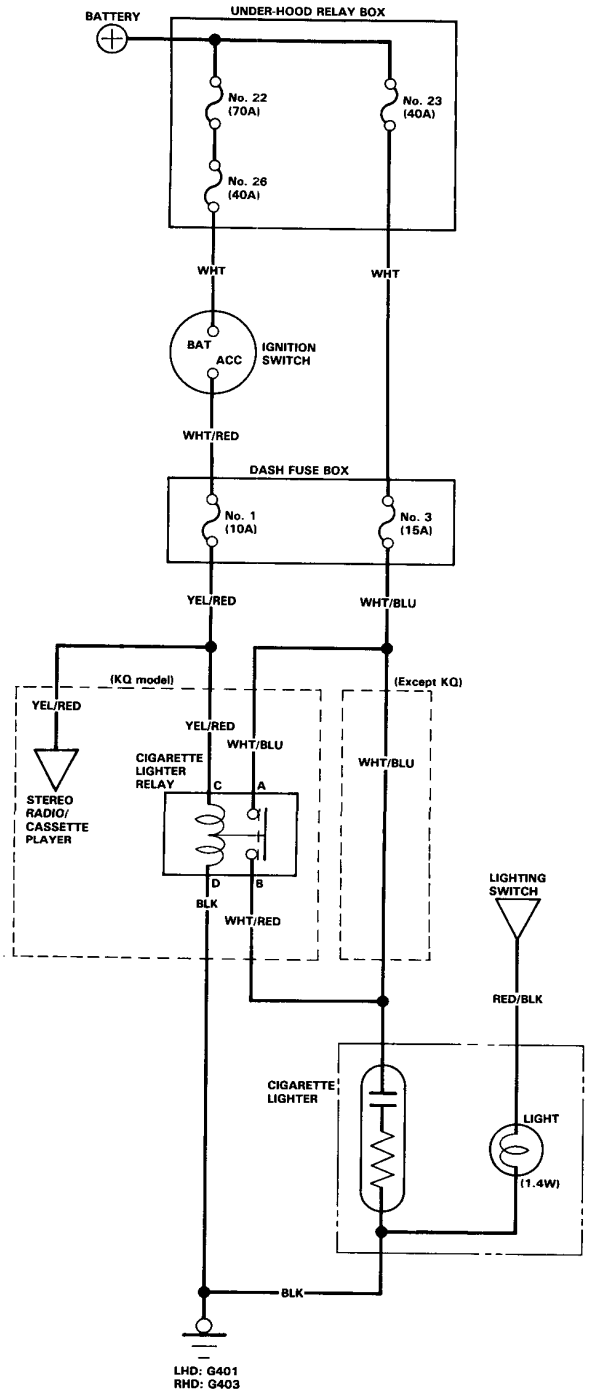

Replacement

1. Remove the front console.

2. Remove the 6 screws and the center instrument panel with the stereo radio/cassette player, then disconnect the 16-P connector, the antenna lead, and the 4-P connector from the cigarette lighter.

3. Disconnect the thermofuse case from the socket end.

4. Remove the ring nut and separate the cigarette lighter socket from the thermal protector.

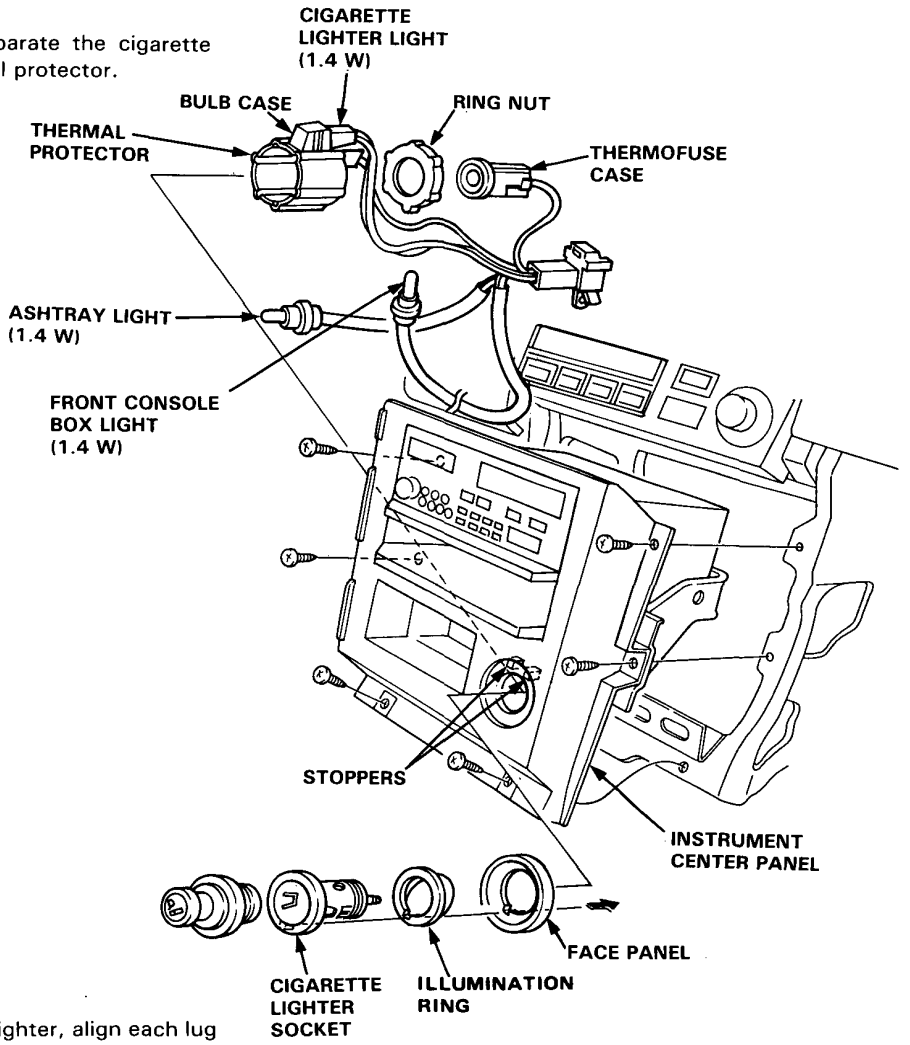

5. When installing the cigarette lighter, align each lug on the face panel, illumination ring and cigarette lighter socket with the slot in the hole, then position the bulb case on the thermal protector between the stoppers of the center panel.

6. Make sure that the ground wire, bulb socket and thermofuse case are seated to the cigarette lighter assembly.

Cigarette Lighter

Relay Test

1. Remove the dashboard lower panel and the cigarette lighter relay in the dash relay holder.

2. There should be continuity between the A and B terminals when the battery is connected to the C and D terminals.
   There should be no continuity when the battery is disconnceted.

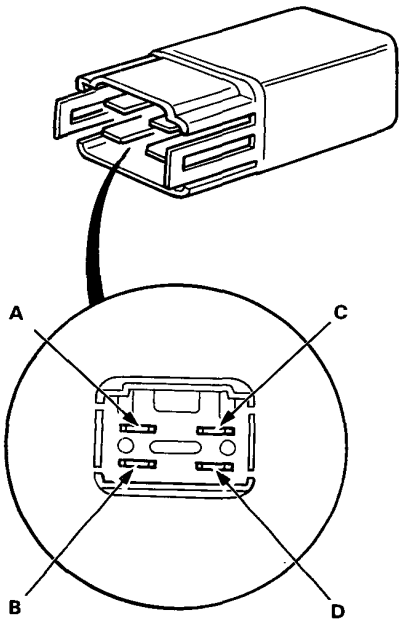

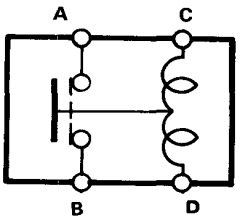

Power Door Mirrors

Circuit Diagram

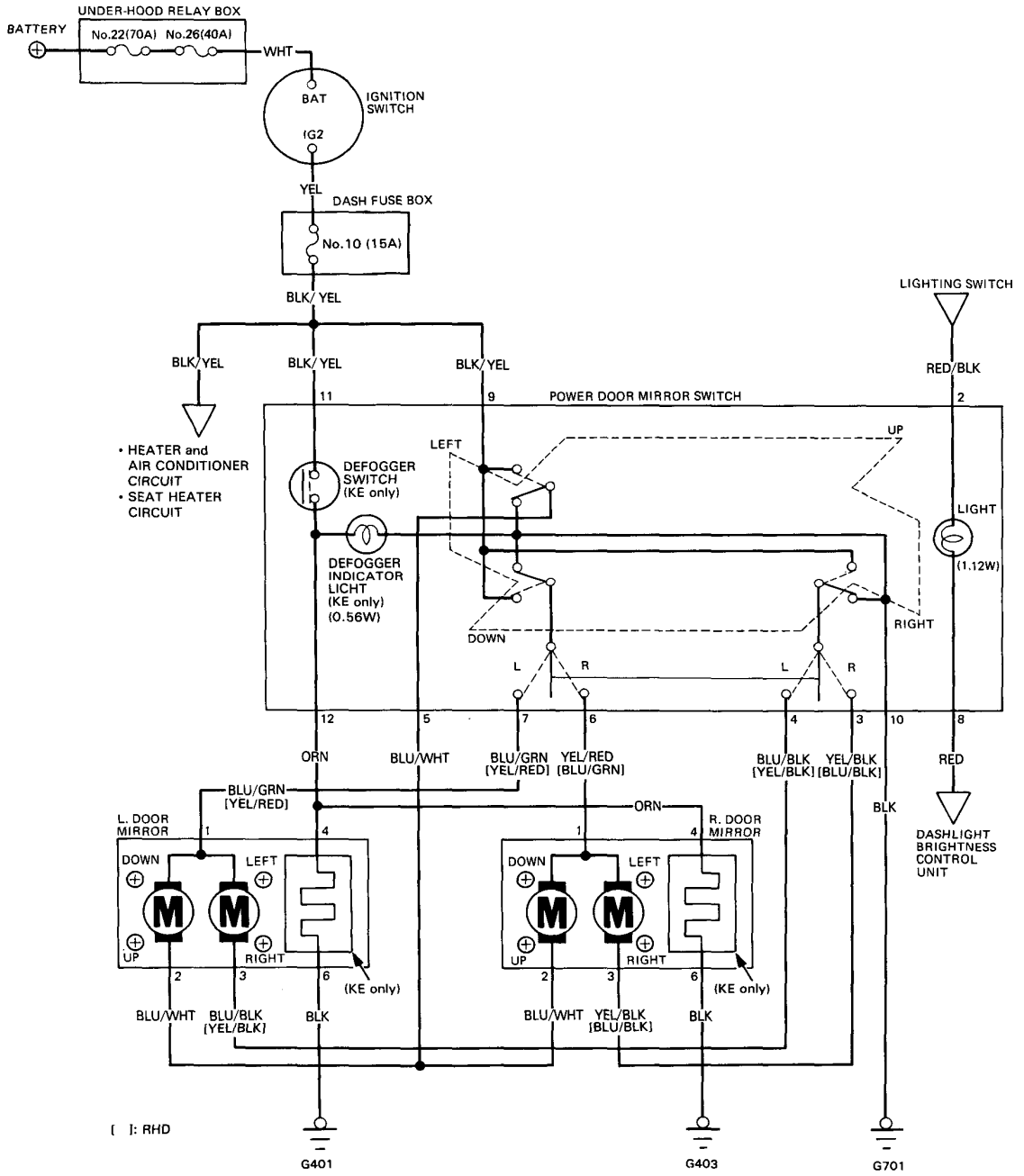

Function Test

NOTE: Before testing, remove the dashboard lower panel and push the switch from behind the instrument panel, then disconnect the 10-P connector (and the 2-P connector for KE model) to remove the switch.

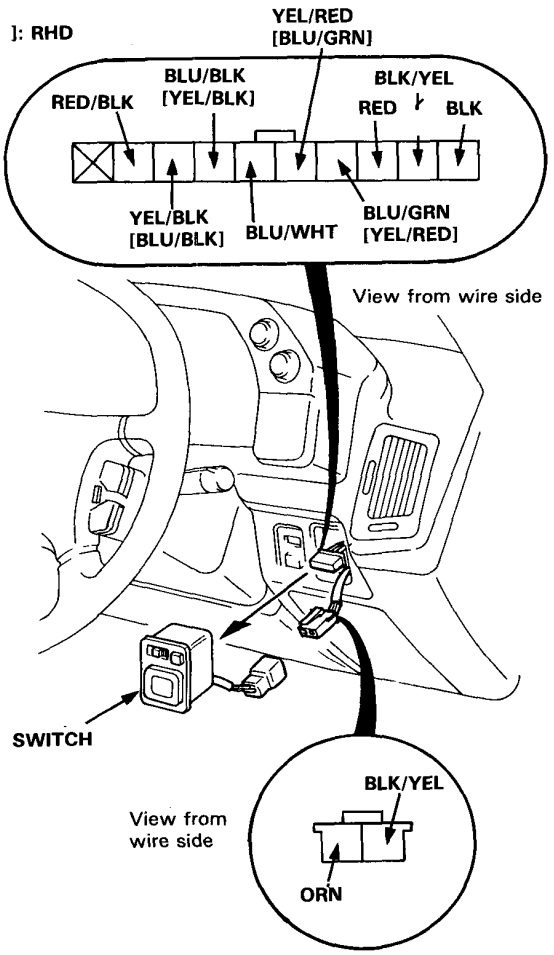

Mirror Test

One or both inoperative:

1. Check for voltage between the BLK/YEL terminal of the 10-P connector and body ground with the ignition switch ON.
   There should be battery voltage.

   - If there is no voltage, check for:
     - Blown No. 10 (15 A) fuse in the dash fuse box.
     - An open in the BLK/YEL wire between the dash fuse box and the switch.

   - If there is battery voltage, go to step 2.

2. Check for continuity between the BLK terminal and body ground.
   If no continuity, check for open in the BLK wire.

Driver's inoperative:
Connect the BLK/YEL terminal of the 10-P connector to the BLU/GRN terminal and the BLU/WHT (or BLU/BLK) terminal to body ground with jumper wires.
The driver's mirror should tilt down (or swing left) when the ignition switch is turned ON.

- If the mirror does not tilt down (or does not swing left), remove the driver's door trim panel and check for open in the BLU/WHT (or BLU/BLK) wire between the driver's door mirror and the switch.
  If the wire is OK, check the driver's door mirror.

- If the mirror neither tilts down nor swings left, repair the BLU/GRN wire.

- If the mirror operates properly, check the mirror switch.

Passenger's inoperative:
Connect the BLK/YEL terminal of the 10-P connector to the YEL/RED terminal and the BLU/WHT (or YEL/BLK) terminal to body ground with jumper wires.
The passenger's mirror should tilt down (or swing left) when the ignition switch is turned ON.

- If the mirror does not tilt down (or does not swing left), remove the passenger's door trim panel and check for open in the BLU/WHT (or YEL/BLK) wire between the passenger's door mirror and the switch.
  If the wire is OK, check the passenger's door mirror.
- If the mirror neither tilts down nor swings left, repair the YEL/RED wire.

- If the mirror operates properly, check the mirror switch.

Defogger Test (KE only)

1. Check for voltage between the BLK/YEL terminal of the 2-P connector and body ground with the ignition switch ON.
   There should be battery voltage.
   - If there is no voltage, check for open in the BLK/YEL wire between the dash fuse box and the defogger switch.
   - If there is battery voltage, go to step 2.
2. Connect the BLK/YEL terminal of the 2-P connector to the ORN terminal with a jumper wire.
   Both the right and left mirrors should gradually warm up when the ignition switch is turned ON.
   - If neither warm up, repair the ORN wire.
   - If only one fails to warm up, check its mirror defogger element (see page 16-154).
   - If both warm up, check the switch.

Switch Test

1. Remove the power door mirror switch from the instrument panel.
2. Check for continuity between the terminals in each switch position according to the table.

Mirror Switch

	Position \ Terminal	3	4	5	6	7	9	10	2		8
R	OFF	○		○	○			○			
	UP			○			○				
	DOWN	○			○		○				
	LEFT			○	○		○				
	RIGHT	○					○				
L	OFF		○	○		○		○	○	⊘	○
	UP			○			○				
	DOWN		○			○	○				
	LEFT			○		○	○				
	RIGHT		○				○				

Defogger Switch (KE only)

Position \ Terminal	11	12		10
OFF		○	⊘	○
ON	○	○	⊘	○

(Internal connection)

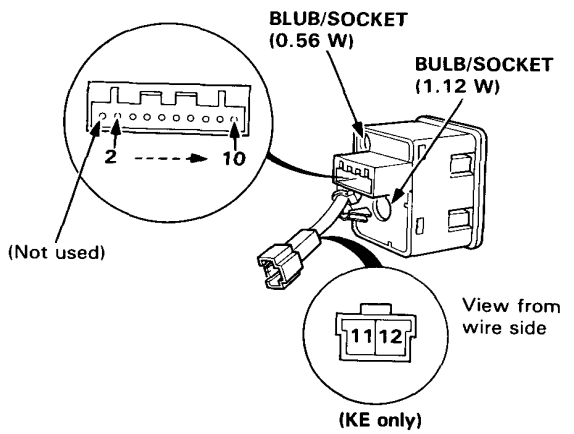

Power Door Mirrors

Door Mirror Test

1. Remove the door trim panel, then disconnect the 4-P or 6-P connector from the mirror.

2. Test actuator operation:
   TILT UP: Connect battery positive to the No.2 terminal and negative to the No.1 terminal.
   TILT DOWN: Connect battery positive to the No.1 terminal and negative to the No.2 terminal.
   SWING RIGHT: Connect battery positive to the No.3 terminal and negative to the No.1 terminal.
   SWING LEFT: Connect battery positive to the No.1 terminal and negative to the No.3 terminal.

3. If the mirror fails to operate properly, replace it.

4. For KE model, check for continuity between the No. 4 and No. 6 terminals. (RX10³ scale)
   There should be continuity.

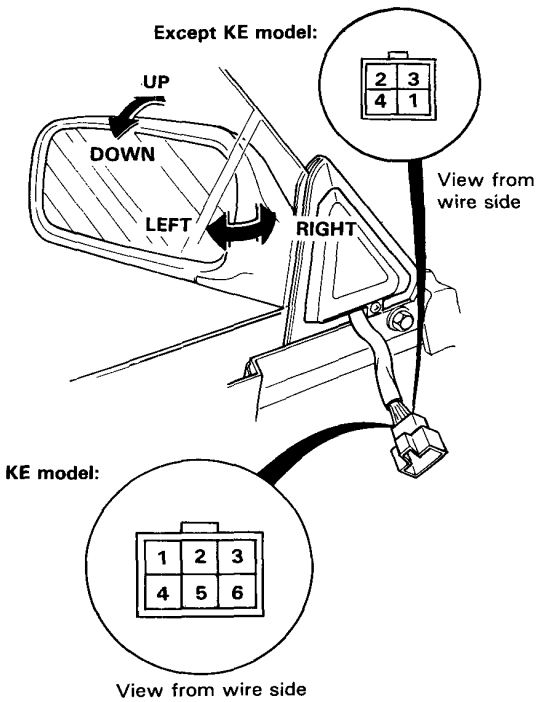

Door Mirror Replacement

1. Remove the door trim panel, then disconnect the 4-P or 6-P connector from the mirror.

2. Carefully pry out the cover panel lid with a flat tip screwdriver, then remove the 2 screws and the cover panel.

3. While holding the mirror with one hand remove its mount screws with the other.

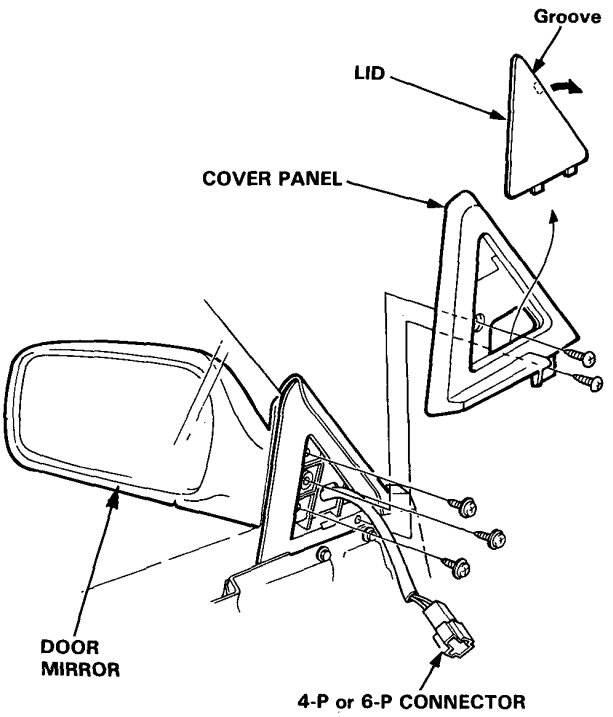

Power Seat Belt Presenter

Component Location Index

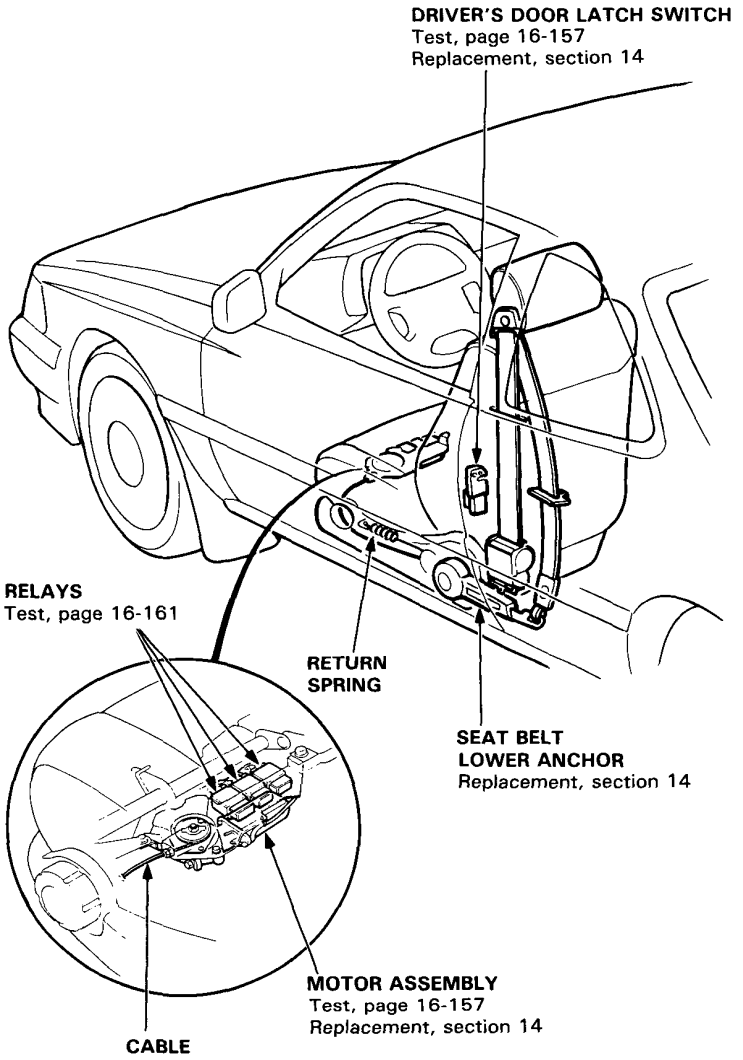

Power Seat Belt Presenter

Wiring Diagram

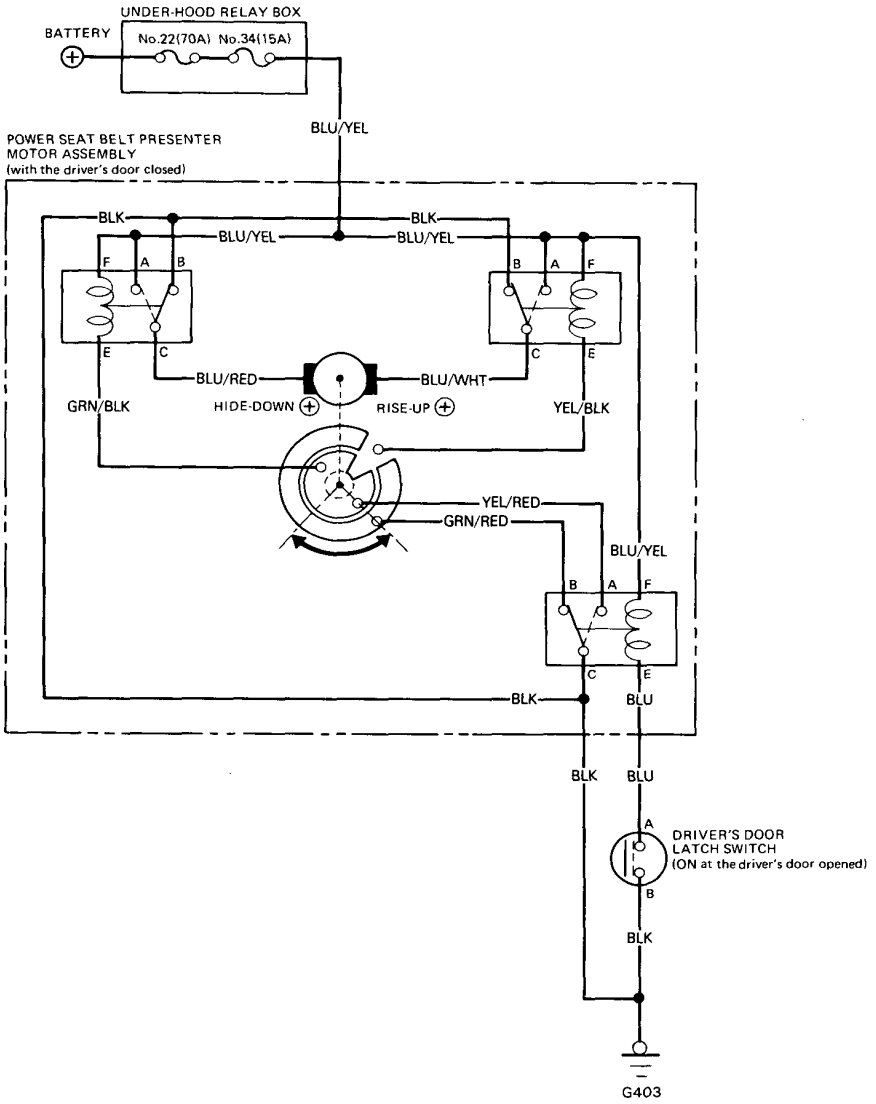

Motor Assembly Test

1. Slide the driver's seat forward to disconnect the 3-P connector from the motor assembly.

2. With the ignition switch on, there should be battery voltage between the BLU/YEL and BLK terminals at the 3-P connector on the floor.

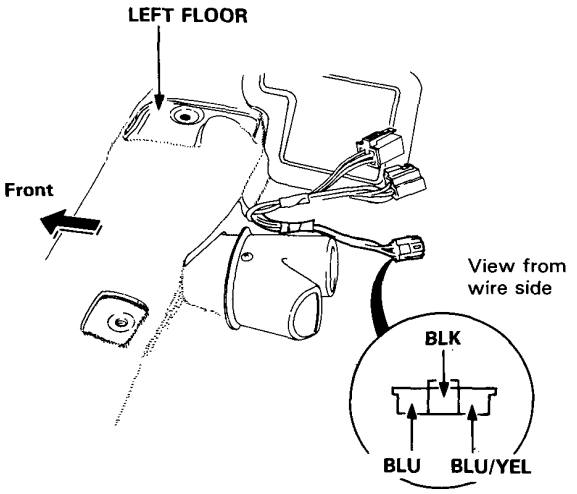

- If there is no voltage, check for:
  - Blown No. 34 (15 A) fuse in the under-hood relay box.
  - Poor ground (G403).
  - An open in the BLU/YEL wire.
- If there is battery voltage, check for continuity between the BLU and BLK terminals with the driver's door opened.
  - If there is no continuity, check the driver's door latch switch.
  - If there is continuity, check the 3 relays and the wire harness connections.
    If all relays and the connections are OK, yet the presenter still fails to operate, repair the cable or replace the motor assembly.

Latch Switch Test

1. Remove the driver's door trim panel.

2. Disconnect the 2-P connector from the door latch.

3. Check for continuity between the terminals according to the table.

Position \ Terminal	A	B
LOCK (Door close)		
UNLOCK (Door open)	○	○

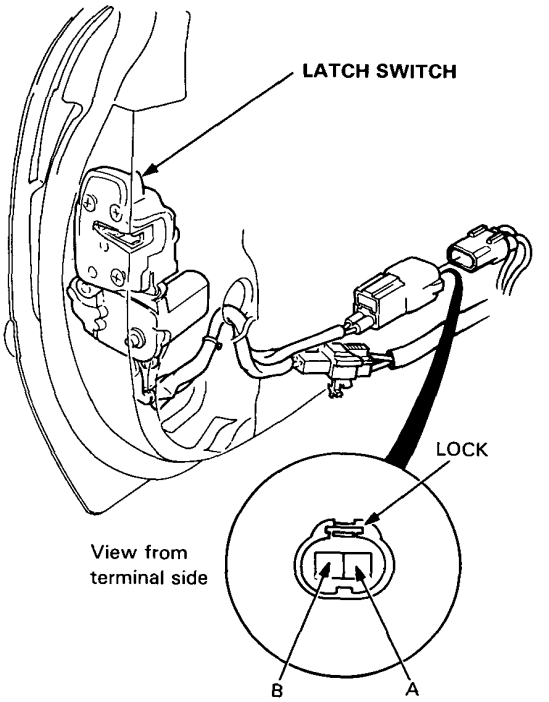

Component Location Index

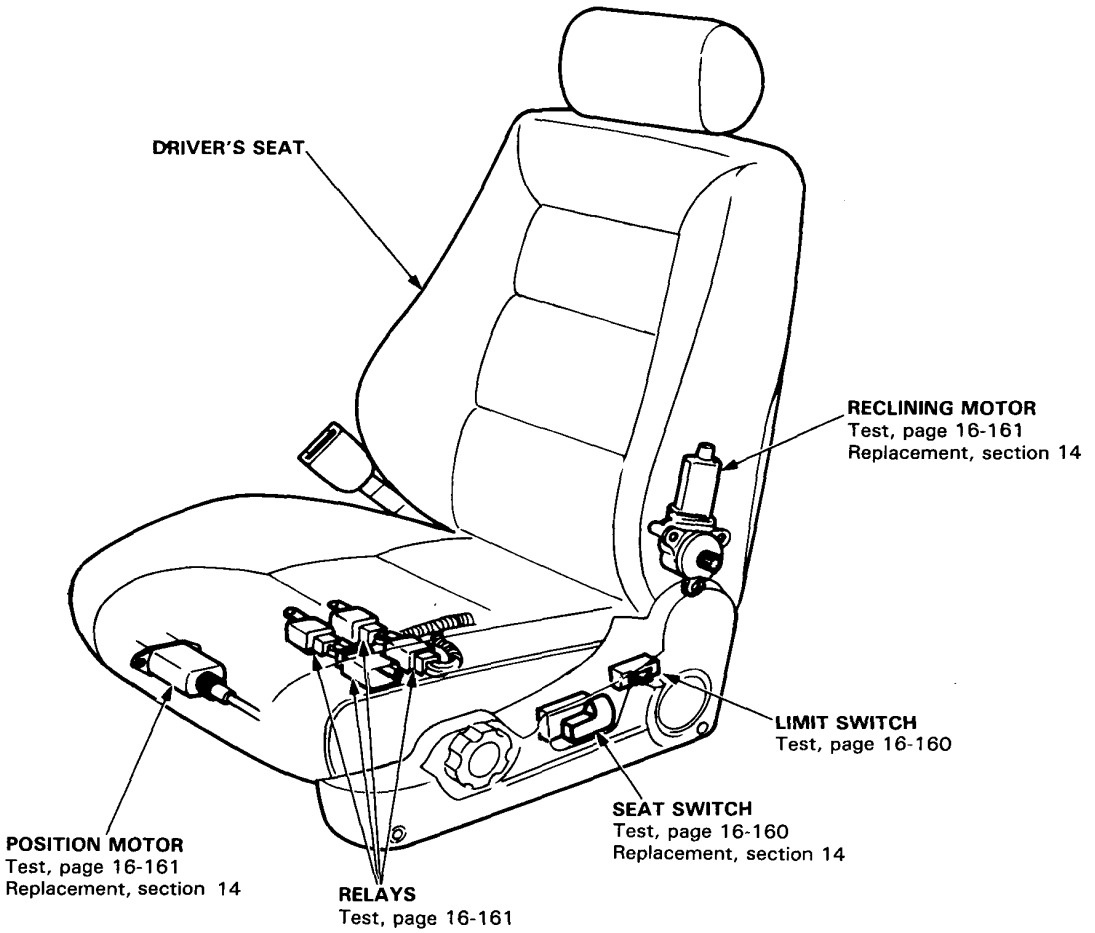

Circuit Diagram

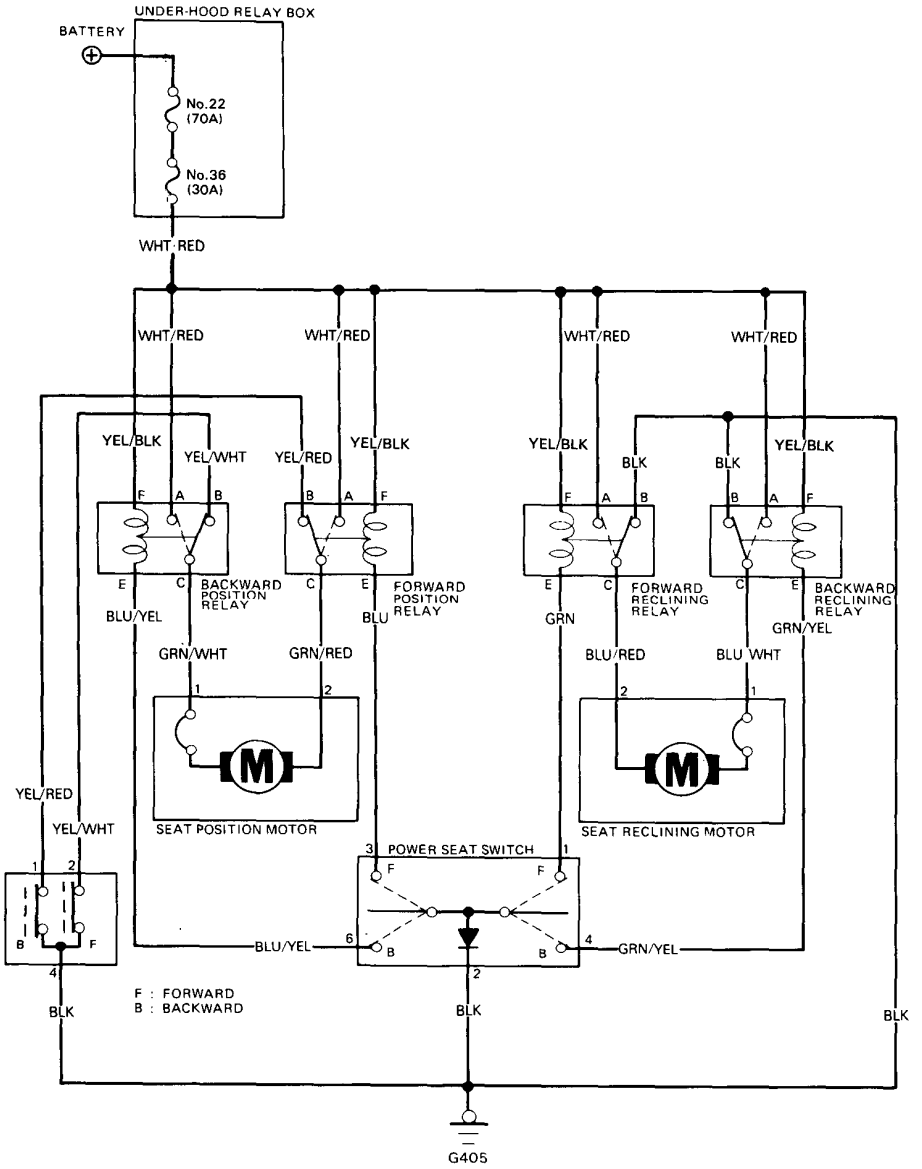

Seat Switch Test

CAUTION: Be careful not to damage the seats, the interior trims or the body.

1. Remove the driver's seat, then disconnect the 6-P connector from the seat switch.
2. Check for continuity between the terminals in each switch position according to the table.

Terminal / Position	1	4	3	6		2
FORWARD POSITION			○			
BACKWARD POSITION				○	●▶	○
FORWARD RECLINE	○				●	
BACKWARD RECLINE		○				

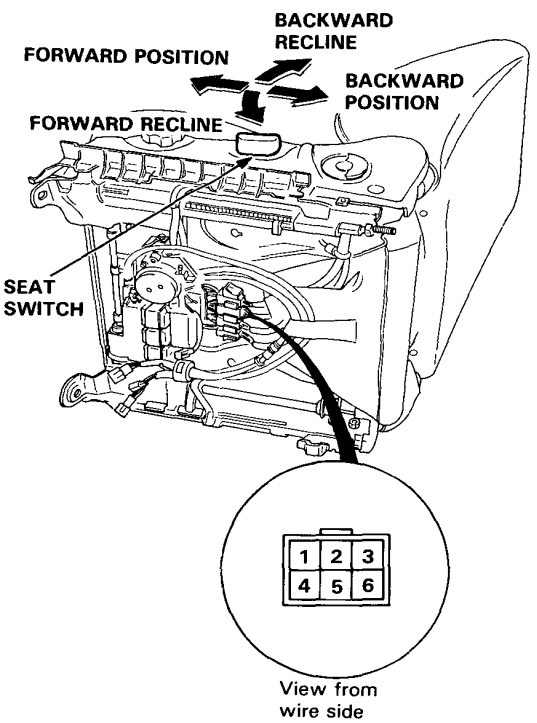

Limit Switch Test

CAUTION: Be careful not to damage the seats, the interior trims or the body.

1. Remove the driver's seat, then disconnect the 4-P connector from the limit switch.
2. Check for continuity between the terminals in each switch position according to the table.

Terminal / Position	2	4	1
F (OFF at full forward)		○	○
NEUTRAL	○	○	○
B (OFF at full back)	○	○	

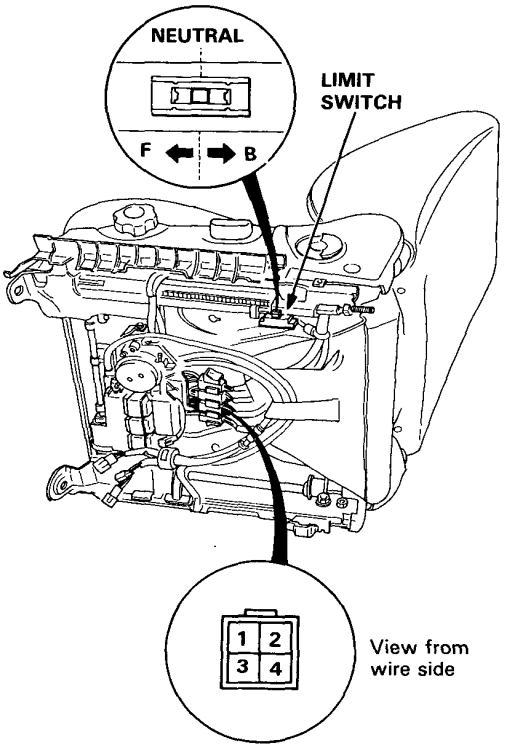

Motor Test

CAUTION: Be careful not to damage the seats, the interior trims or the body.

1. Remove the driver's seat, then disconnect the 2-P connector from the motor.

2. Test motor operation:
   FORWARD
   POSITION: Connect battery positive to the No.2 terminal and negative to No.1 terminal.

   BACKWARD
   POSITION: Connect battery positive to the No.1 terminal and negative to the No.2 terminal.

   FORWARD
   RECLINE: Connect battery positive to the No.2 terminal and negative to the No.1 terminal.

   BACKWARD
   RECLINE: Connect battery positive to the No.1 terminal and negative to the No.2 terminal.

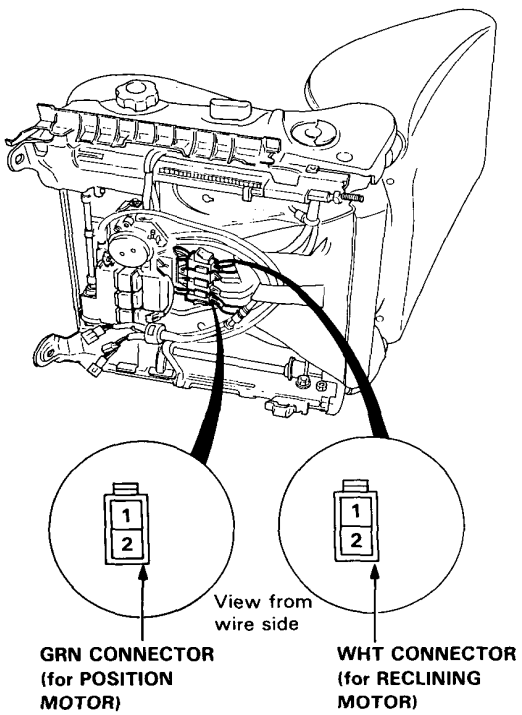

Relay Test

1. Remove the driver's seat, then remove the relay from behind the seat cushion.

2. There should be continuity between the A and C terminals when the battery is connected to the E and F terminals.
   There should be continuity between the B and C terminals when the battery is disconnected.

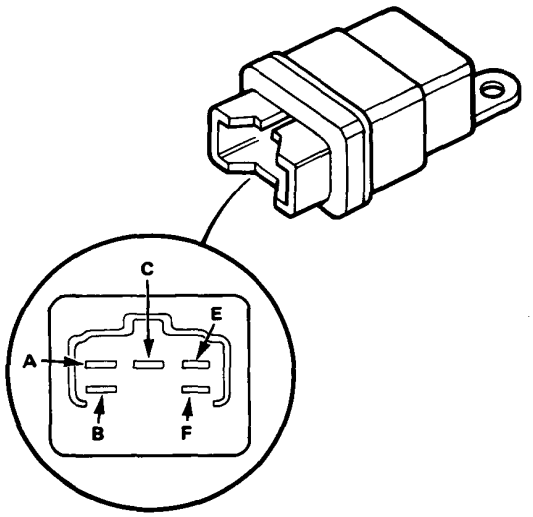

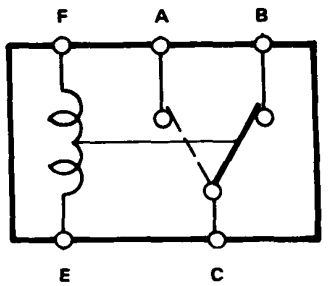

Seat Heaters

Component Location Index

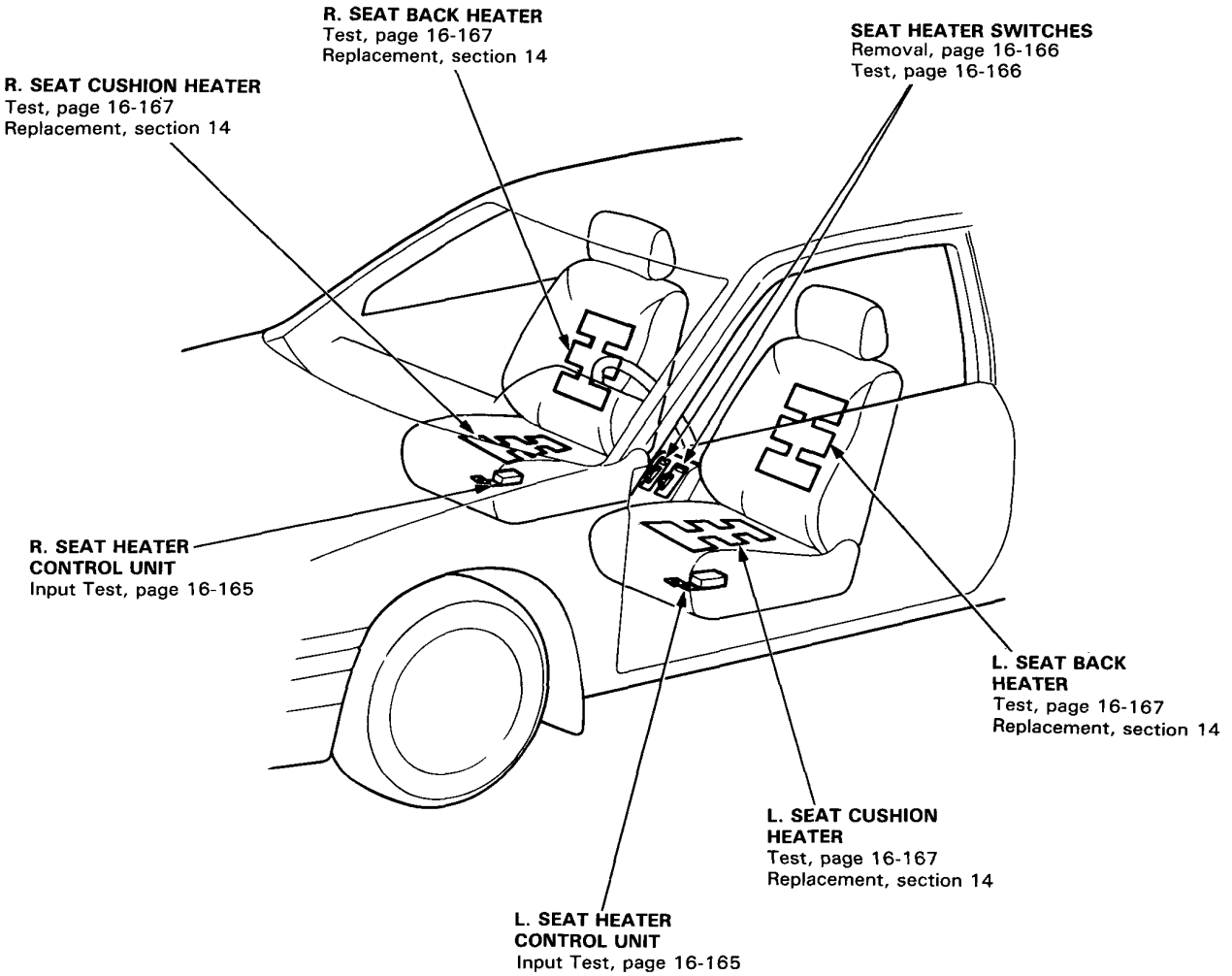

Circuit Diagram

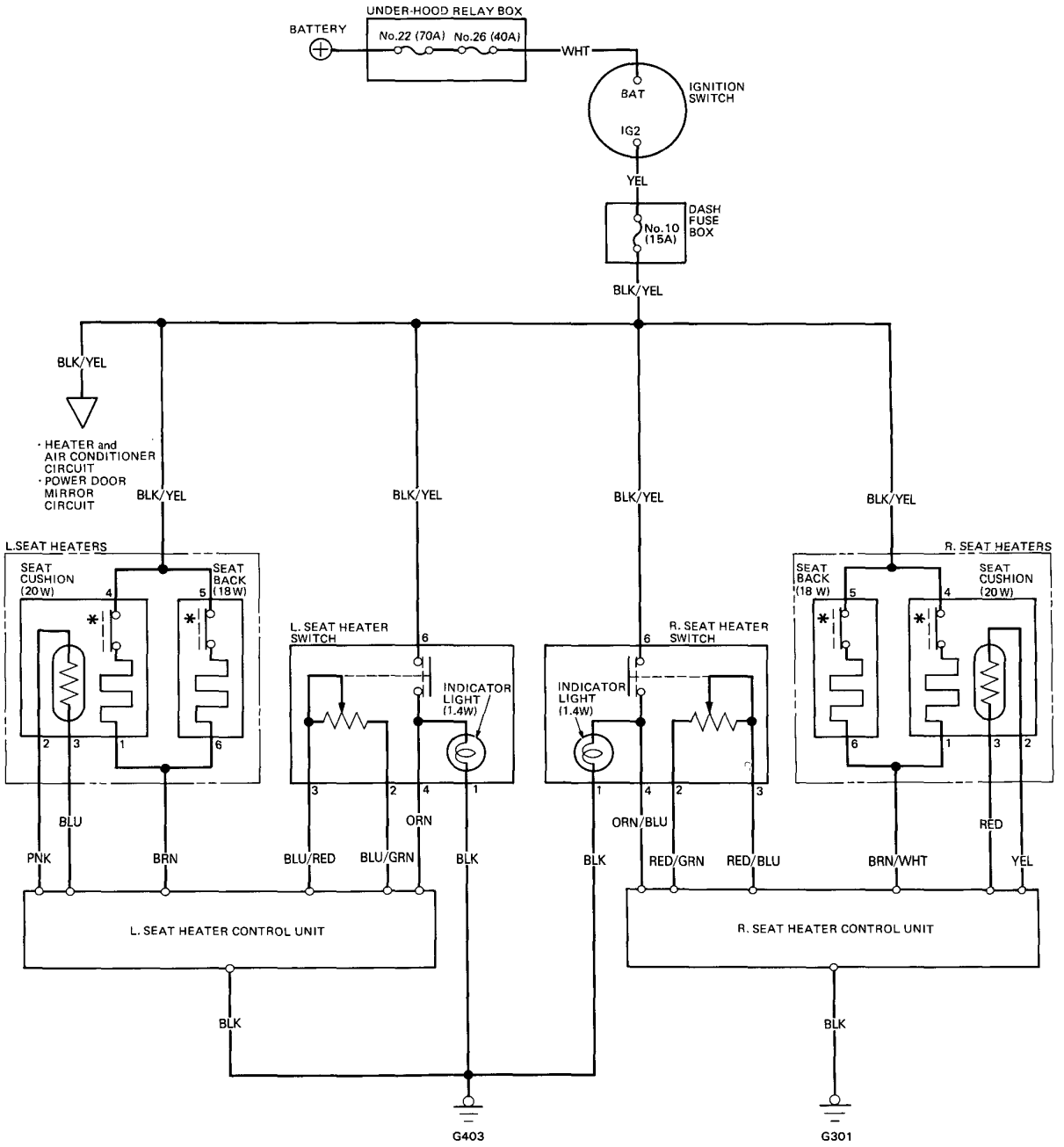

*: BREAKER [OFF above 70°C (158°F)/ON below 40°C (104°F)]

Seat Heaters

Troubleshooting

NOTE: The numbers in the table show the troubleshooting sequence.

Symptom \ Item to be inspected		Blown No. 10 (15A) fuse (in the dash fuse box)	Blown indicator light bulb	Seat heater switch	Seat heater	Thermistor (in the seat cushion heater)	Control unit input	Poor ground	Open circuit in wires or loose or disconnected terminals
Seat heaters operate, but indicator light does not go on.			1					G403	
Seat heaters do not operate and indicator light does not go on.		1		2				G403	BLK/YEL
Seat heaters do not operate, but indicator light goes on.	Left seat						1	G403	BLK/YEL, BRN or ORN
	Right seat						1	G301	BLK/YEL, BRN/WHT or ORN/BLU
Seat cushion heater or seat back heater does not operate, but indicator light goes on.					1				
Seat heaters can be adjusted.	Left seat			1		2	3		BLU/GRN, BLU/RED, PNK or BLU
	Right seat			1		2	3		RED/GRN, RED/BLU, YEL or RED

Control Unit Input Test

Remove the seat, then disconnect the 8-P connector from the control unit.
Make the following input tests at the harness pins.

NOTE:
- Left control unit shown, right control unit is similar.
  [ ]: Right control unit
- Recheck connection between the 8-P connector and the control unit, and between the 4-P connector and the seat heaters, then replace the control unit if all input tests and seat heater test prove OK.

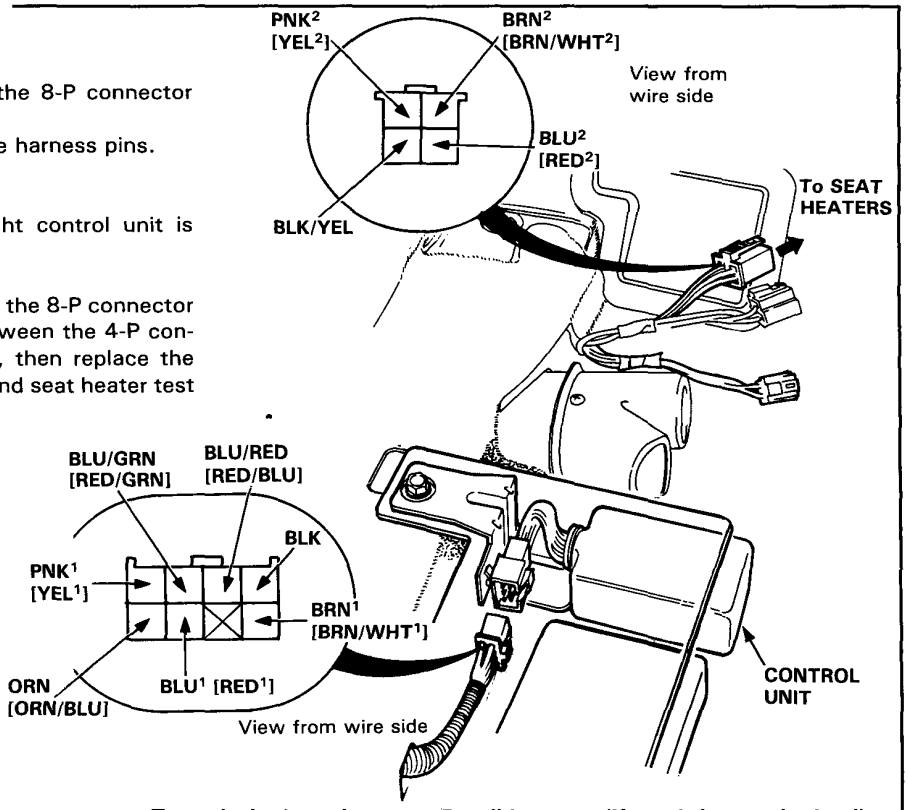

No.	Wire	Test condition	Test: desired result	Possible cause (if result is not obtained)
1	BLK	Under all conditions.	Check for continuity to ground: should be continuity.	• Poor ground (G403 [G301]). • An open in the wire.
2	ORN [ORN/BLU]	Ignition switch ON and seat heater switch clicked into ON.	Check for voltage to ground: should be battery voltage.	• Blown No. 10 (15A) fuse. • Faulty seat heater (ON/OFF) switch. • An open in the wire.
3	BLU/GRN and BLU/RED [RED/GRN and RED/BLU]	Adjusting dial rotated.	Check for resistance between the BLU/GRN [RED/GRN] and BLU/RED [RED/BLU] terminals. should vary from 0 to 10,000 ohms as the dial is rotated.	• Faulty seat heater (variable) switch. • An open in the wire.
4	BLK/YEL	Ignition switch ON.	Check for voltage to ground: should be battery voltage.	• An open in the wire.
5	PNK [YEL] • BLU [RED] • BRN [BRN/WHT]	Under all conditions.	Check for continuity between the terminals. There should be continuity: • Between the PNK1 [YEL1] and PNK2 [YEL2] terminals. • Between the BLU1 [RED1] and BLU2 [RED2] terminals. • Between the BRN1 [BRN/WHT1] and BRN2 [BRN/WHT2] terminals	• An open in the wire.
6	Test the seat heaters (see page 16-167).			

Seat Heaters

Switch Removal

1. Remove the center console.
2. Disconnect the 6-P connector to remove the switch, then push out the switch from behind the console.

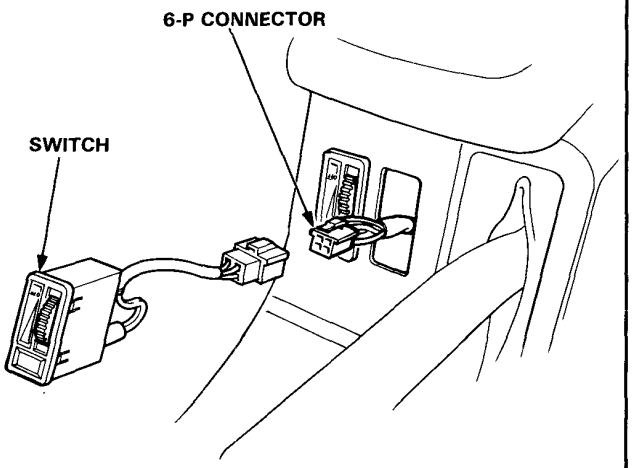

3. Turn the socket 45° counterclockwise to remove it.

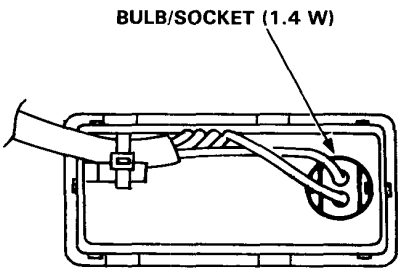

Switch Test

1. Remove the seat heater switch from the center console.
2. There should be continuity between the No. 4 and No. 6 terminals when the switch is clicked into ON. There should be no continuity when the switch is clicked into OFF.

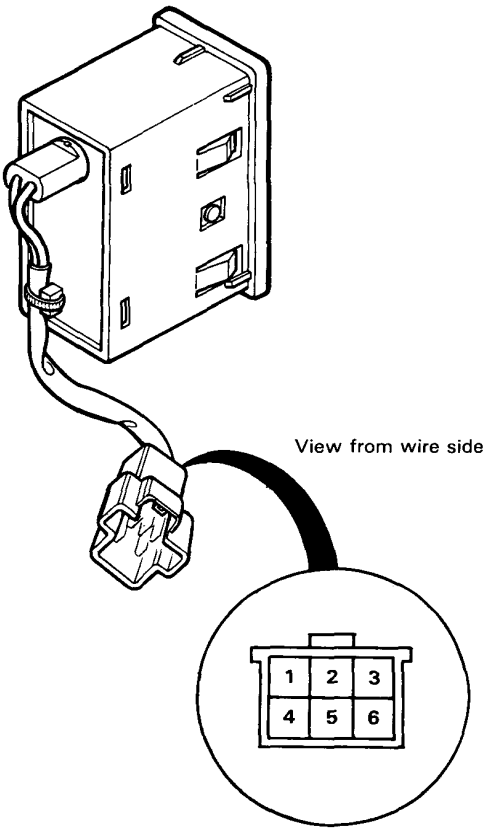

3. Measure resistance between the No. 2 and No. 3 terminals while rotating the adjusting dial. Resistance should vary from 0 to 10,000 ohms as the dial is rotated.

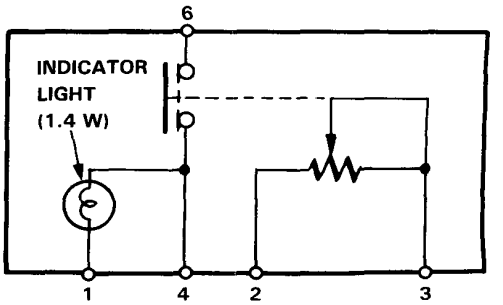

Heater Test

1. Slide the seat forward to disconnect the 4-P connector from the seat cushion heater, and the 2-P connector from the seat back heater.

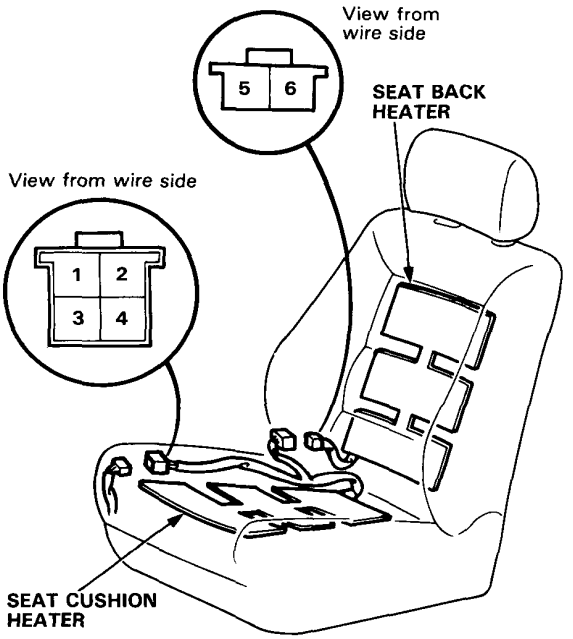

2. Check for continuity between the No. 1 and No. 4 terminals, and between the No. 5 and No. 6 terminals. ($RX10^3$ scale)
   There should be continuity.

3. Using an ohmmeter ($RX10^3$ scale), measure resistance between the No. 2 and No. 3 terminals. Replace the seat cushion heater if the resistance is not within specifications.

   NOTE: Resistance will vary with the thermistor temperature; specifications are at 25°C (77°F) or more.

   Thermistor Resistance: 8 kΩ or less.

Component Location Index

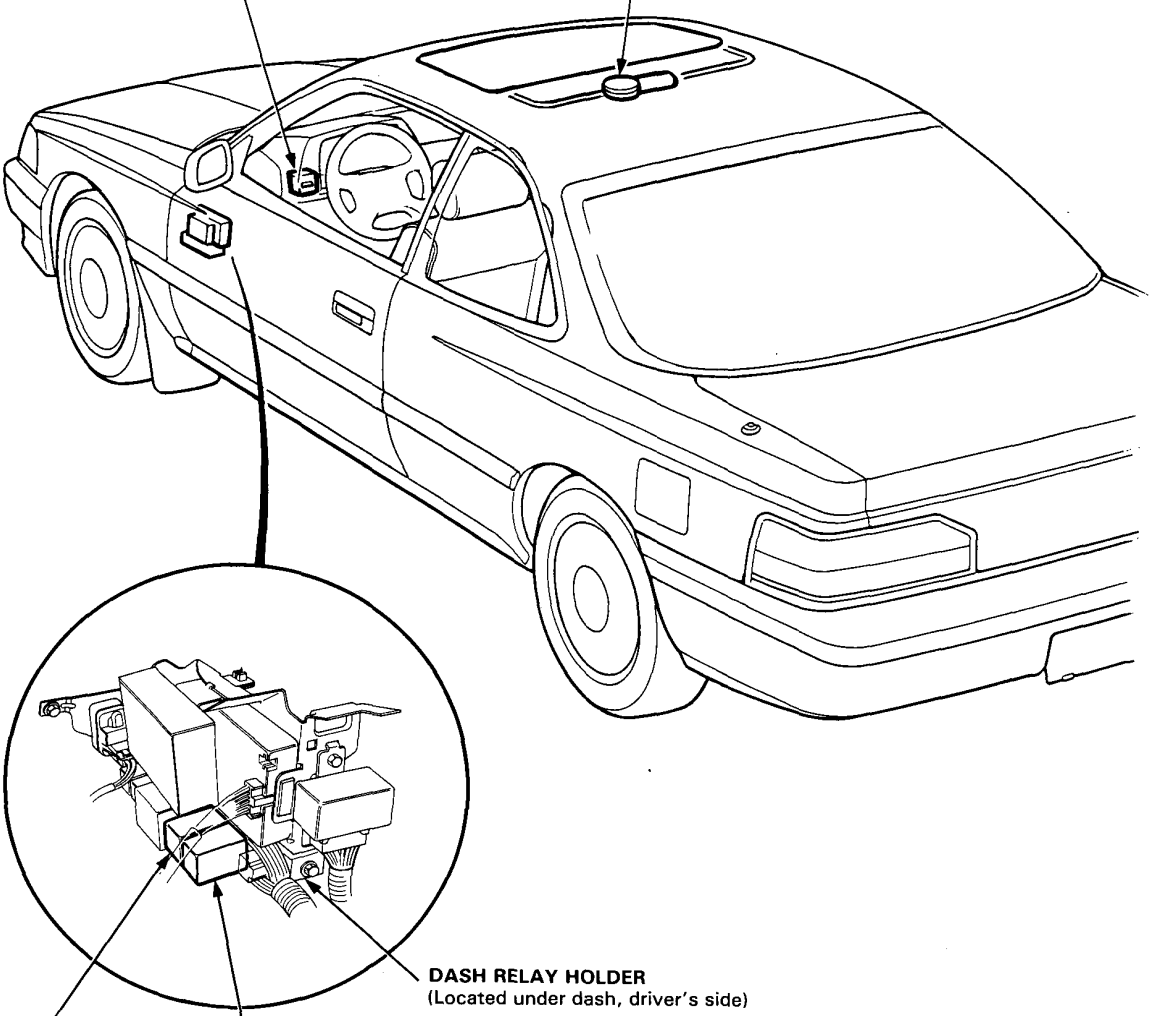

Circuit Diagram

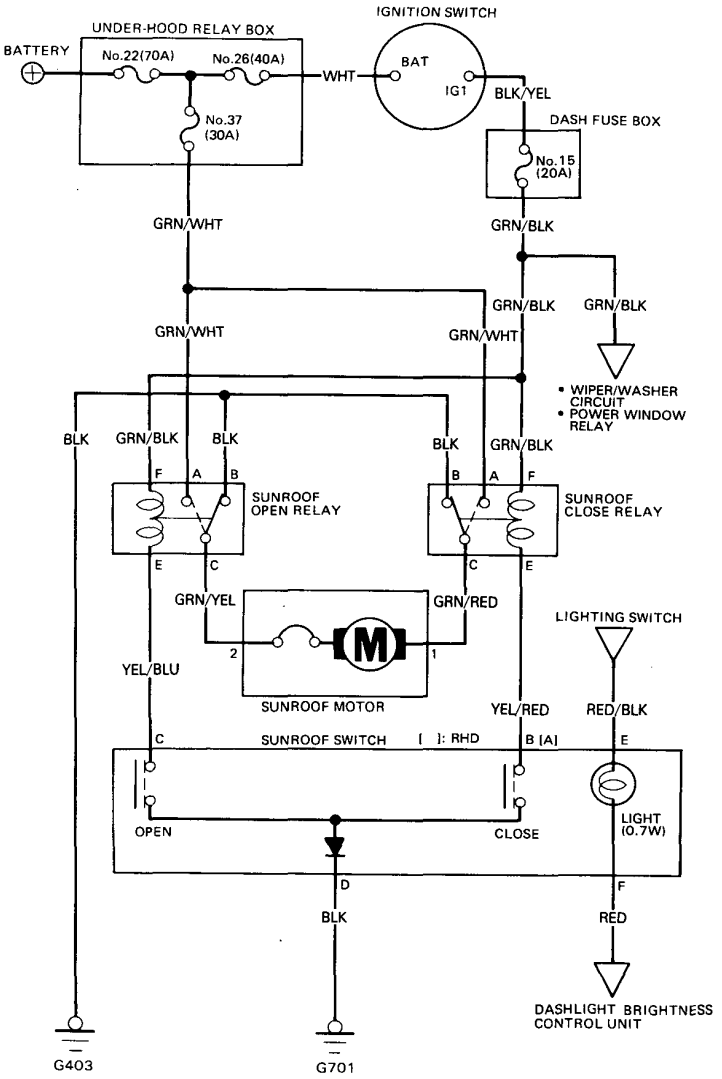

Electrical Troubleshooting

NOTE: The numbers in the table show the troubleshooting sequence.

Symptom \ Item to be inspected		Clutch out of adjustment, foreign matter stuck between guide rail and sunroof, or outer cable not attached properly.	Blown No. 37 (30 A) fuse (in the under-hood relay box)	Blown No. 15 (20 A) fuse (in the dash fuse box)	Function Test	Open relay	Close relay	Sunroof motor	Sunroof switch	Poor ground	Open circuit in wires or loose or disconnected terminals.
Sunroof does not move, but motor turns.		1									
Sunroof does not move and motor does not turn (sunroof can be moved with sunroof wrench).	Switch in any position.		1	2	3			5	4	G403 or G701	GRN/WHT, GRN/BLK, GRN/YEL, or GRN/RED
	With OPEN switch.					1	2		3		YEL/BLU
	With CLOSE switch.					2	1		3		YEL/RED

Function Test

1. Remove the 4 screws, then remove the instrument panel from the dashboard.

2. Connect the YEL/BLU terminal to the the BLK terminal with a jumper wire.
   The sunroof should open when the ignition switch is turned ON.

   - If the sunroof opens, check the switch.

   - If not, connect the YEL/BLU terminal to body ground.

     — If the sunroof opens, check for open in the BLK wire, and check whether the G701 terminal is poor.
     — If not, remove the headliner and check the motor.

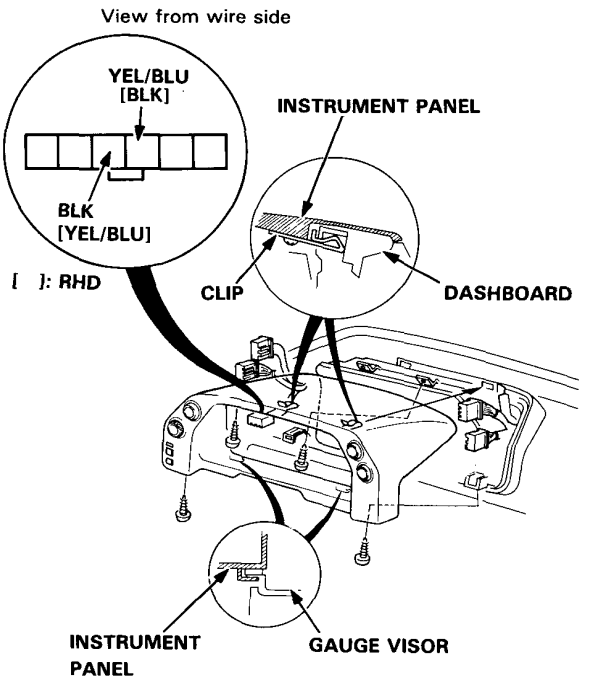

Switch Removal

1. Remove the 4 screws, then remove the instrument panel from the dashboard.

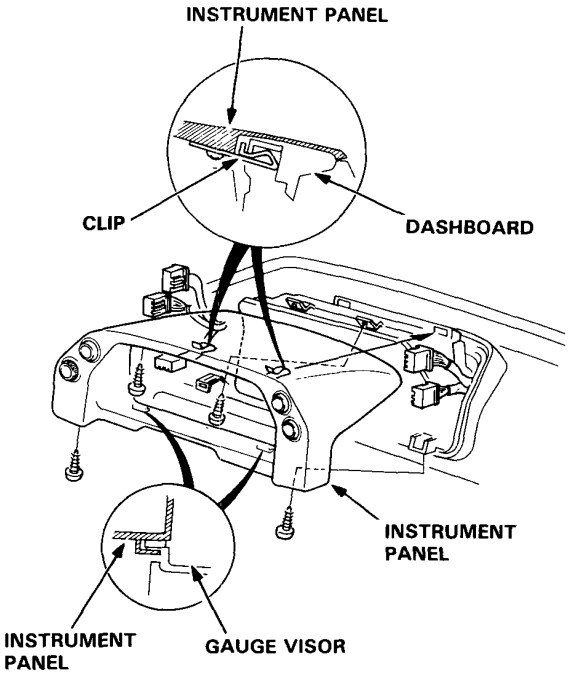

2. Remove the screw from the rear of the instrument panel, then remove the switch.

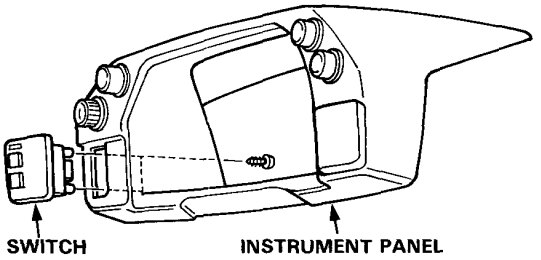

3. Turn the socket 45° counterclockwise to remove it.

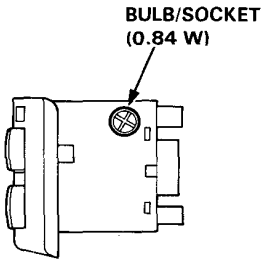

Switch Test

1. Remove the instrument panel from the dashboard.
2. Check for continuity between the terminals in each switch position according to the table.

Terminal / Position	B [A]	C		D	E		F
OFF							
OPEN	○		▶	○	○	⊗	○
CLOSE		○					

View from wire side

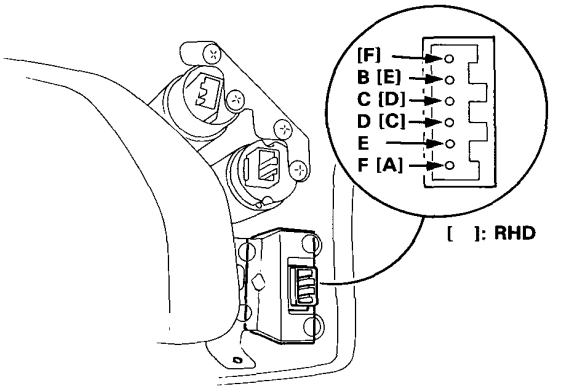

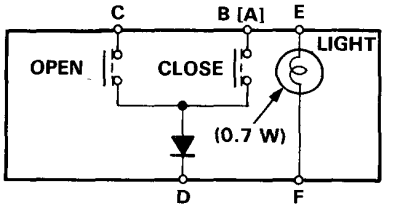

Motor Test

1. Remove the headliner.
2. Disconnect the 2-P connector from the sunroof motor.
3. Test motor operation by connecting battery to the No.1 and No.2 terminals. Test the motor in each direction, by switching the leads from the battery.
4. If the motor does not run, replace it.

   NOTE: See Closing Force Check in section 14 for motor clutch test.

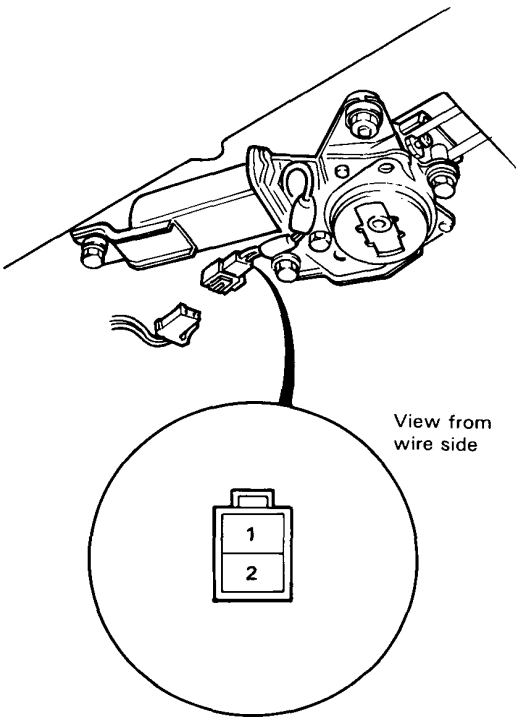

Relay Test

1. Remove the sunroof relays in the dash relay holder.
2. There should be continuity between the A and C terminals when the battery is connected to the E and F terminals.
   There should be continuity between the B and C terminals when the battery is disconnected.

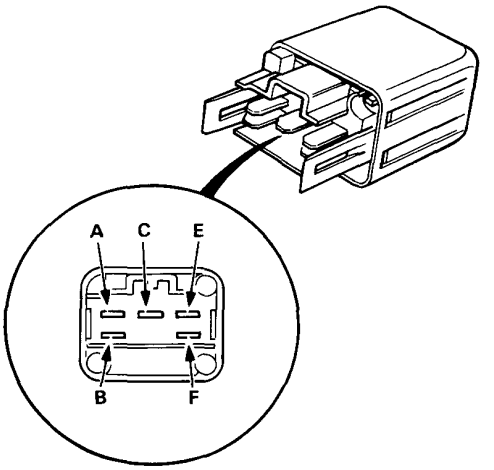

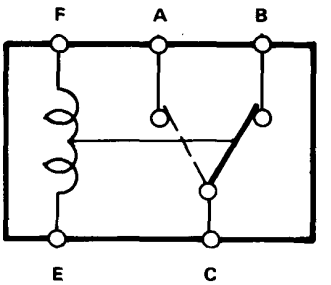

Power Door Locks

Component Location Index

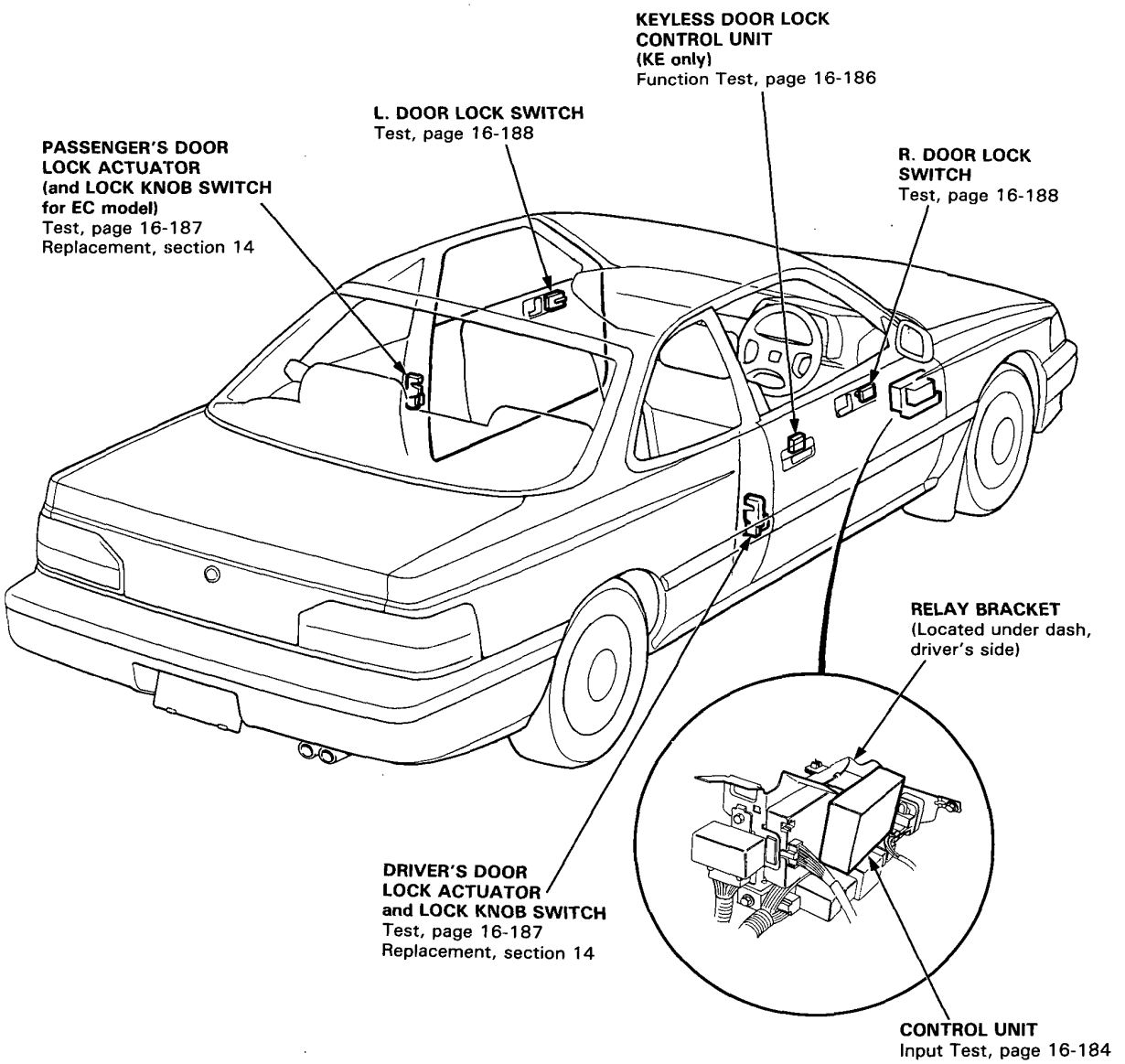

Circuit Diagram (EC model)

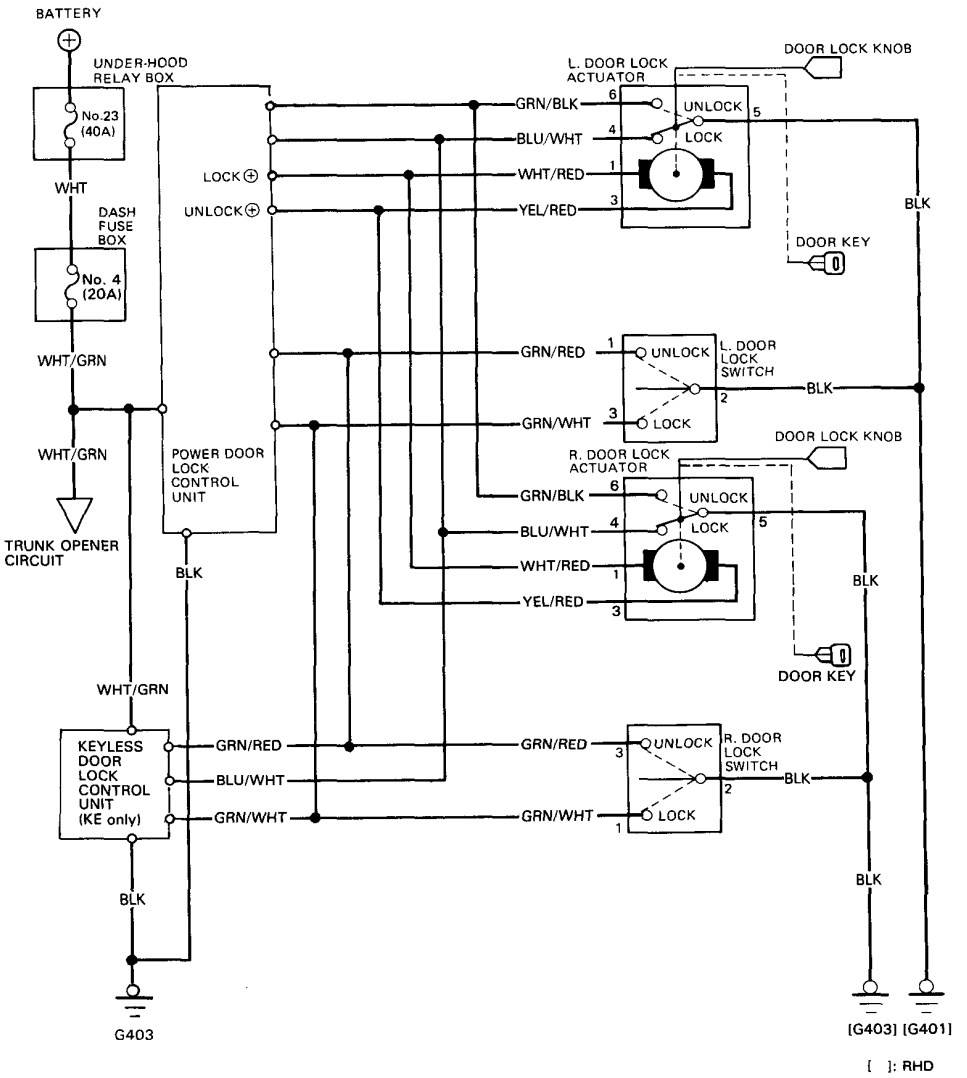

Power Door Locks

Circuit Diagram (Except EC model)

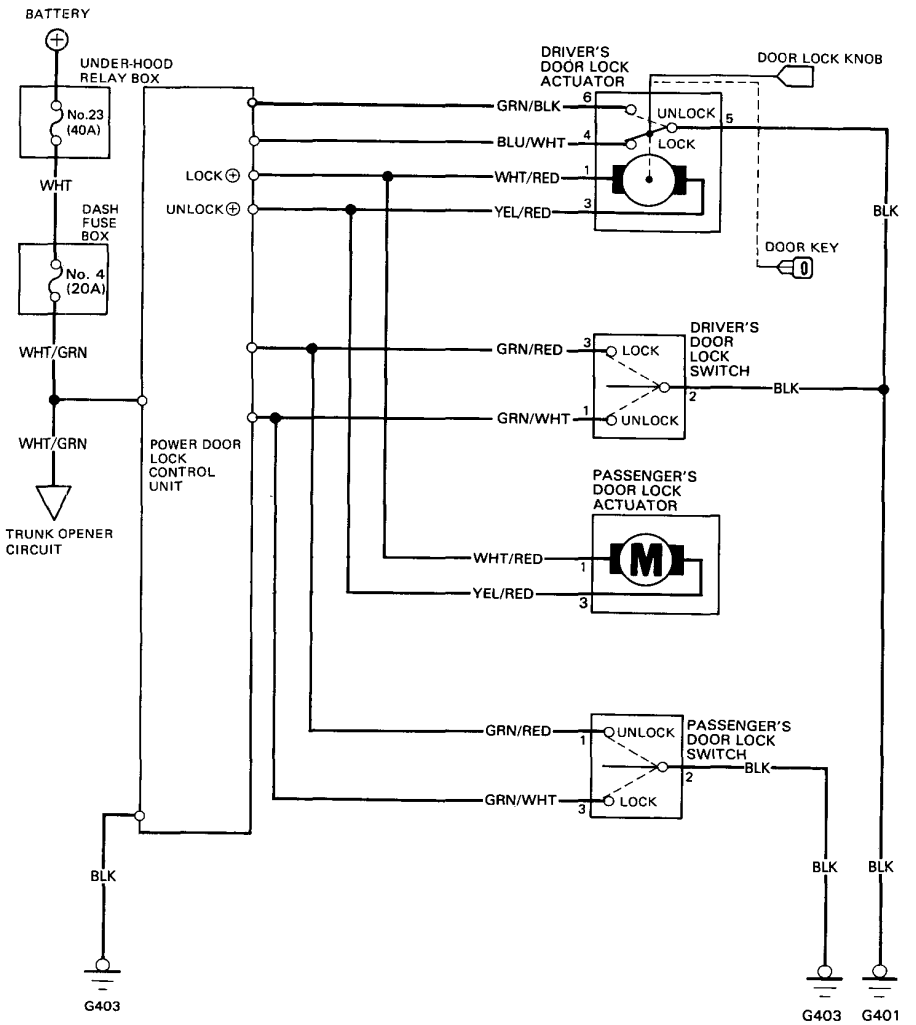

Troubleshooting

NOTE: The numbers in the table show the troubleshooting sequence.

Symptom \ Item to be inspected		Blown No. 23 (40 A) fuse (in the under-hood relay box)	Blown No. 4 (20 A) fuse (in the dash fuse box)	Disconnected or obstructed door lock rod/linkage	Driver's door lock knob switch (in the left door lock actuator)	Passenger's door lock knob switch (in the right door lock actuator	Driver's door lock actuator	Passenger's door lock actuator	L. Door lock switch	R. Door lock switch	Control unit input	Keyless door lock system	Poor ground	Open circuit in wires or loose or disconnected terminals
Power door lock system doesn't operate at all.		1	2								3		G403	WHT/GRN or WHT
Doors don't lock or unlock with the left door lock switch.	Both doors								1		2		G403 [G401]	GRN/RED or GRN/WHT
	Either door			1			2				3			WHT/RED or YEL/RED
Doors don't lock or unlock with the right door lock switch.	Both doors									1	2		G401 [G403]	GRN/RED or GRN/WHT
	Either door			1			2				3			WHT/RED or YEL/RED
Passenger's door doesn't lock or unlock with the driver's door lock knob.				1	2			3			4		G403	GRN/BLK, BLU/WHT, WHT/RED or YEL/RED

[ ]: RHD

EC model only:

Driver's door doesn't lock or unlock with the passenger's door lock knob.			1		2	3				4		G401	GRN/BLK, BLU/WHT, WHT/RED or YEL/RED

KE model only:

Power door lock system operates normally, but keyless door lock system doesn't operate at all.											1	G403	WHT/GRN, GRN/RED or GRN/WHT
In keyless locking/unlocking, doors won't be locked or unlocked by pressing the transmitter button once. (By pressing the button twice, the doors will be locked or unlocked.)				1							2	G401 or G403	BLU/WHT

Control Unit Input Test

Remove the dashboard lower panel, and the dash relay holder from the bracket to facilitate the input test, then disconnect the 14-P connector from the control unit. Make the following input tests at the harness pins.

NOTE: Recheck the connections between the 14-P connector and the control unit, then replace the control unit if all input tests prove OK.

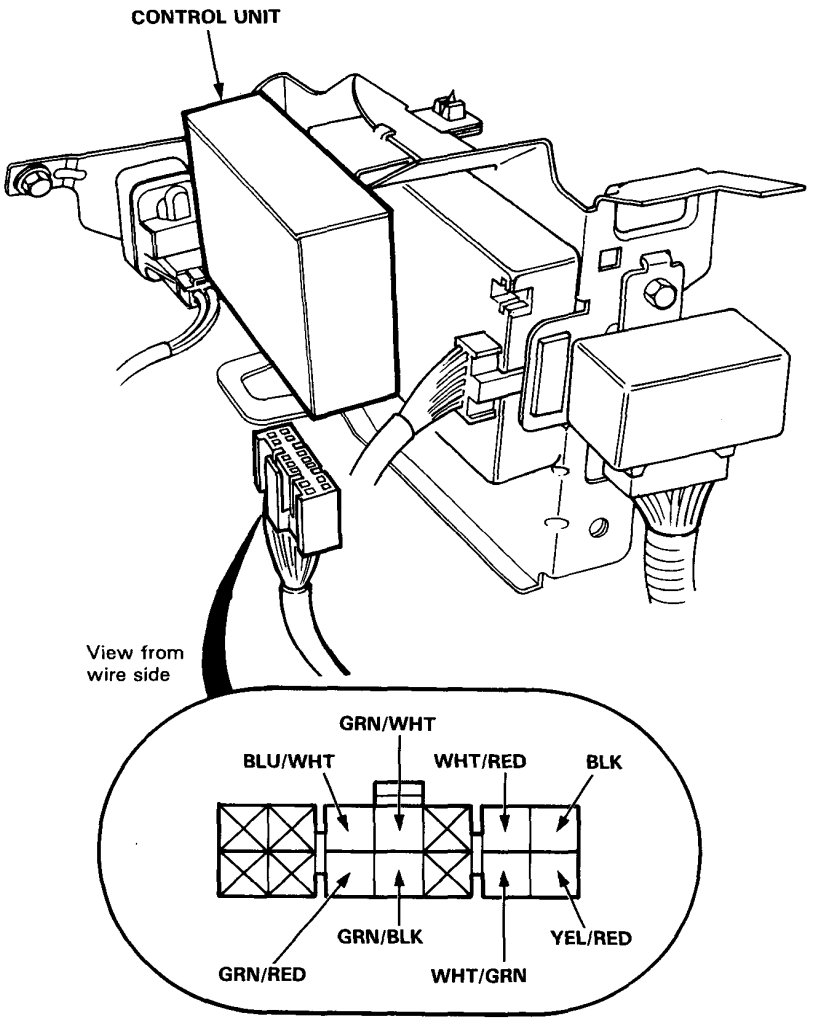

No.	Wire	Test condition	Test: desired result	Possible cause (if result is not obtained)
1	BLK	Under all conditions.	Check for continuity to ground: should be continuity.	• Poor ground (G403). • An open in the wire.
2	WHT/GRN	Under all conditions.	Check for voltage to ground: should be battery voltage.	• Blown No. 23 (40 A) or No. 4 (20 A) fuse. • An open in the wire.
3	GRN/WHT	Left (or right) door lock switch in LOCK.	Check for continuity to ground: should be continuity as the switch is turned.	• Faulty left (or right) door lock switch. • Poor ground (G401 or G403). • An open in the wire.
	GRN/RED	Left (or right) door lock switch in UNLOCK.		
4	WHT/RED and YEL/RED	Connect the WHT/RED terminal to the WHT/GRN terminal, and the YEL/RED terminal to the BLK terminal momentarily.	Check door lock operation: Both doors should lock as the battery is connected momentarily.	• Faulty actuator. • An open in the wire.
		Connect the YEL/RED terminal to the WHT/GRN terminal, and the WHT/RED (or WHT) terminal to the BLK terminal momentarily.	Check door lock operation: Both doors should unlock as the battery is connected momentarily.	
5	BLU/WHT or (GRN/BLK)	Driver's door lock knob in LOCK (or UNLOCK).	Check for continuity to ground: should be continuity.	• Faulty driver's door lock actuator. • Poor ground (G403). • An open in the wire.

CAUTION: To prevent damage to the motor, apply battery voltage momentarily.

EC model only:

6	BLU/WHT or (GRN/BLK)	Passenger's door lock knob in LOCK (or UNLOCK).	Check for continuity to ground: should be continuity.	• Faulty passenger's door lock actuator. • Poor ground (G401). • An open in the wire.

Keyless Door Lock Function Test

NOTE: Prior to checking the system with transmitter, check that the doors can be locked and unlocked with the driver's door lock switch.

1. Check that the red lamp lights when the button is pressed. If the red lamp fails to light, the batteries are dead. Replace the batteries.

   Battery: LR44 alkali button battery

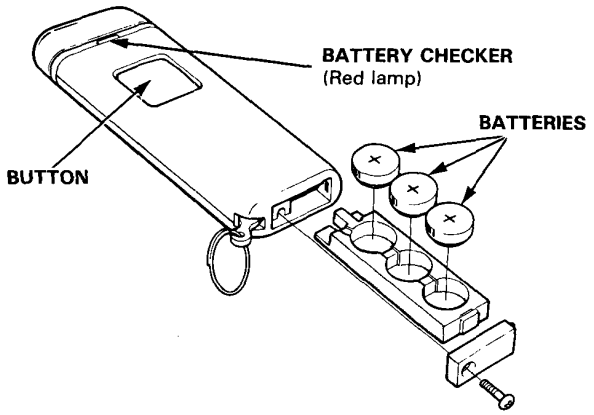

2. Before aiming the transmitter at the receiving window, remove wax or dirt from the window.
   Use the transmitter within 500 mm (20 in) from the signal receiving window. If the system fails to function, go to step 3.

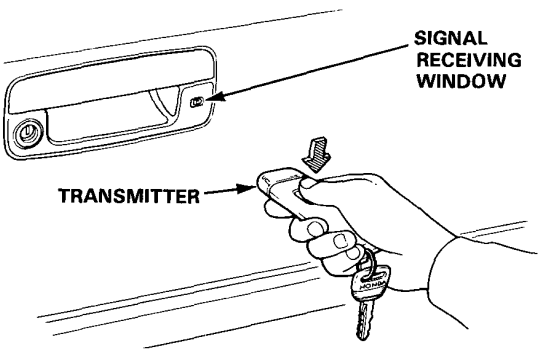

3. Remove the driver's door trim panel and disconnect the 6-P connector from the keyless door lock control unit.

4. Check for continuity between the terminals and operation of the door locks as follows:

   - Check that the battery voltage appears between the WHT/GRN terminal and body ground.
   - Check that there is continuity between the BLK terminal and body ground.
   - Check that all doors are locked (or unlocked) when the GRN/WHT (or GRN/RED) terminal is grounded.
   - Check that there is continuity between the BLU/WHT terminal and body ground with the plunger on the driver's door pushed down in LOCK.

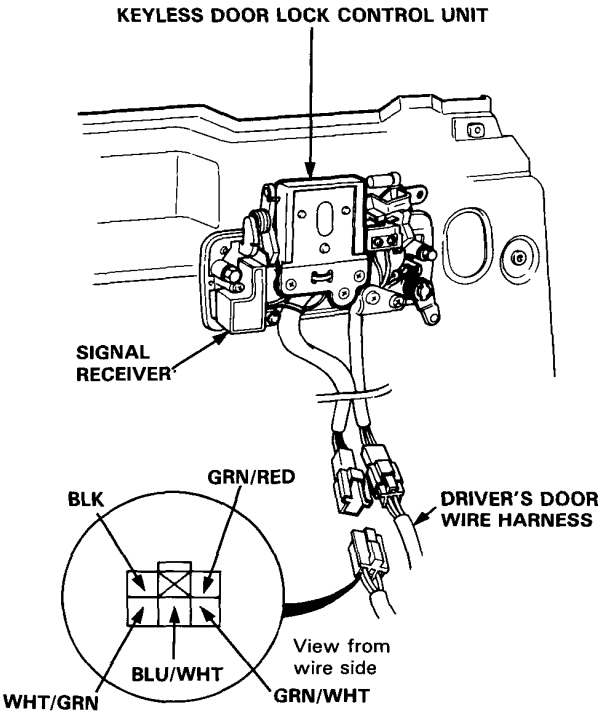

5 Replace the control unit if there is any abnormality in the operation of the system, even when the above tests prove satisfactory.

Actuator Test

1. Remove the door trim panel.
2. Disconnect the 6-P or 2-P connector of the actuator.
3. Test actuator operation:

   LOCK: With battery positive connected to the No.1 terminal, connect negative to the No.3 terminal momentarily.

   UNLOCK: With battery positive connected to the No.3 terminal, connect negative to the No.1 terminal momentarily.

   CAUTION: To prevent damage to the motor, apply battery voltage momentarily.

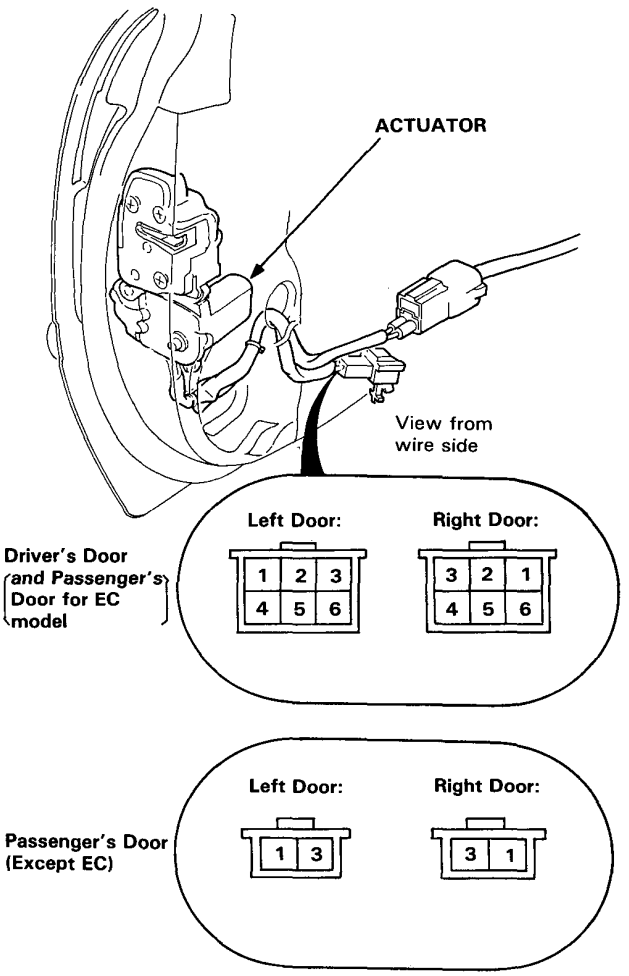

4. If the actuator fails to operate properly, replace it.

5. Check for continuity between the terminals in each switch position according to the table.

Terminal / Position	4	5	6
LOCK	○———	———○	
UNLOCK		○———	———○

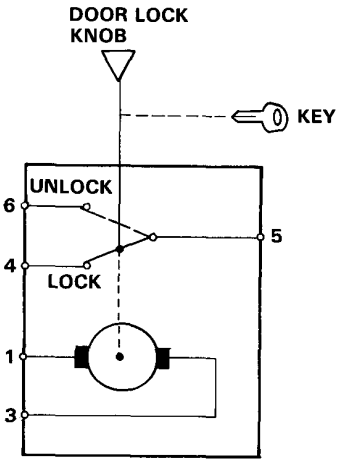

Power Door Locks

Door Lock Switch Test

1. Remove the door trim panel.
2. Disconnect the 3-P connector of the switch.
3. Check for continuity between the terminals in each switch position according to the tables.

Left Door Switch

Position \ Terminal	1	2	3
UNLOCK	○	○	
OFF			
LOCK		○	○

Right Door Switch

Position \ Terminal	1	2	3
UNLOCK		○	○
OFF			
LOCK	○	○	

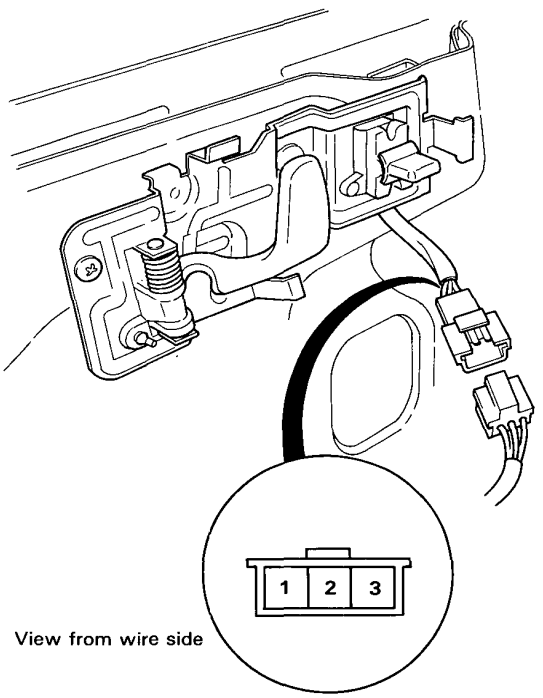

Component Location Index

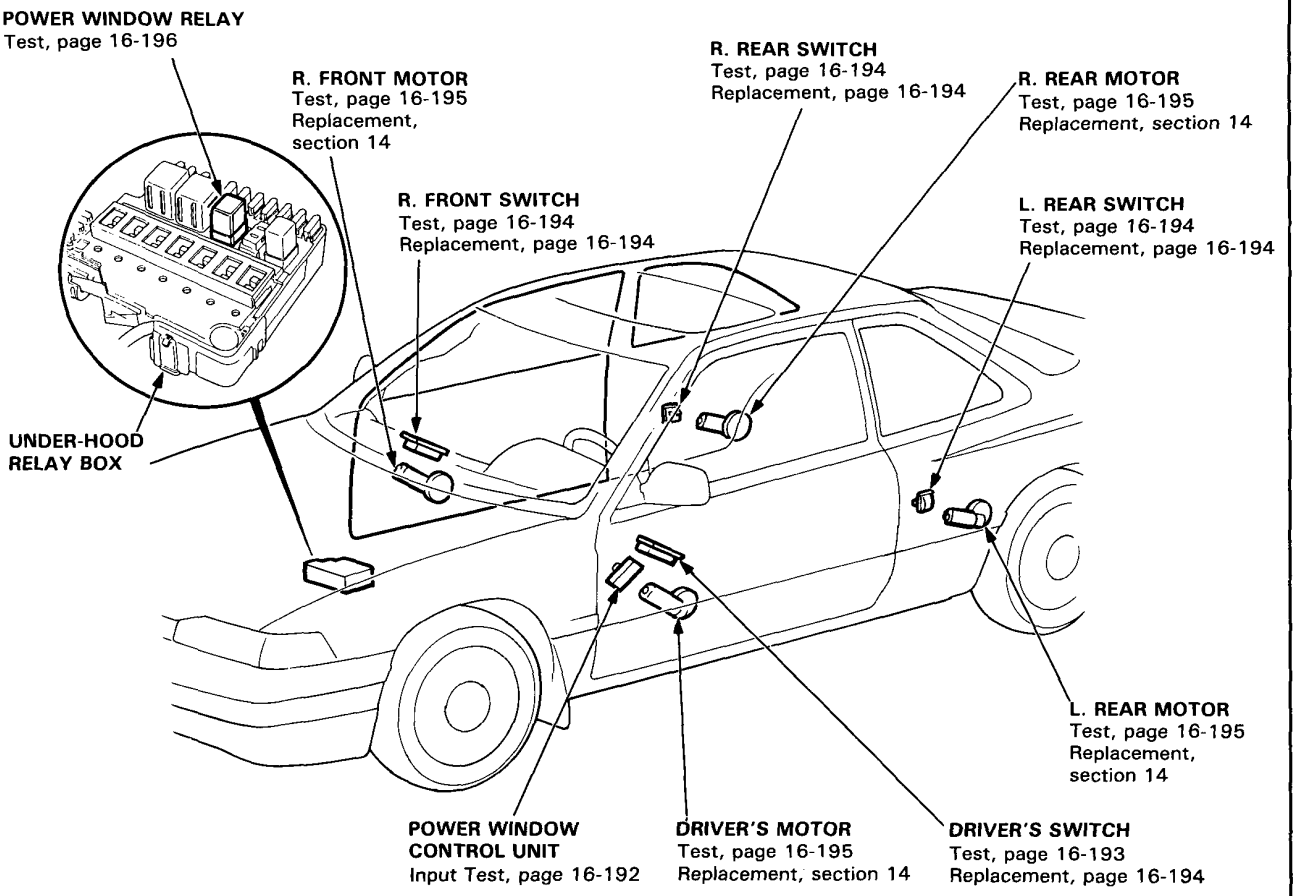

Power Windows

Circuit Diagram

NOTE:

- Several different wires have the same color. They have been given a number suffix to distinguish them (for example BLU/WHT[1] and BLU/WHT[2] are not the same).
- "DN" in the switch circuit denotes DOWN.

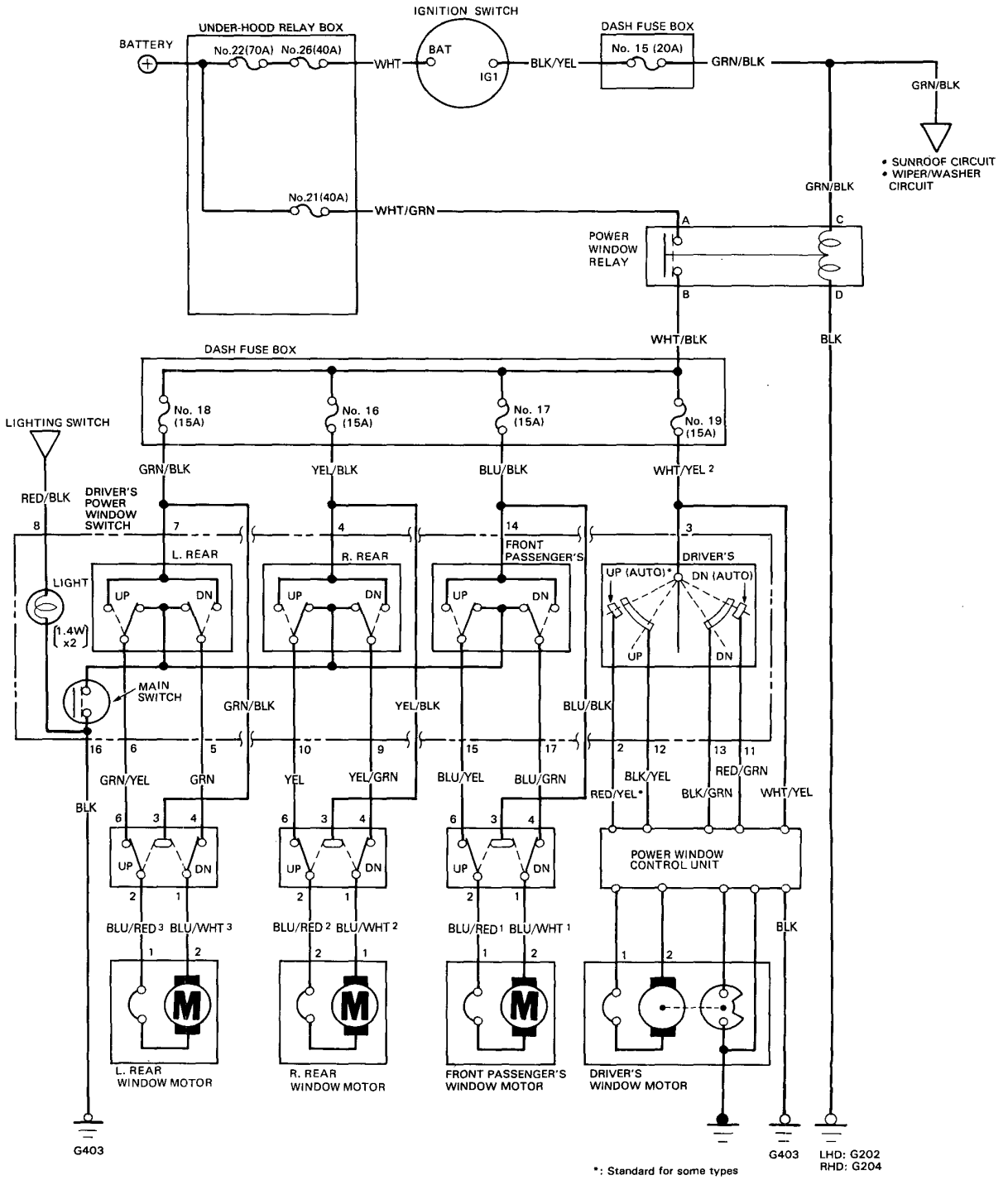

Troubleshooting

NOTE: The numbers in the table show the troubleshooting sequence.

Symptom \ Item to be inspected		Blown No. 21 (40 A) fuse (in the under-hood relay box)	Blown No. 15 (20A) fuse (in the dash fuse box)	Power window relay	in the dash fuse box: Blown No. 19 (15A) fuse	in the dash fuse box: Blown No. 17 (15A) fuse	in the dash fuse box: Blown No. 18 (15A) fuse	in the dash fuse box: Blown No. 16 (15A) fuse	Driver's motor	Window regulator	Driver's switch	Passenger's switch	Pulser (in driver's motor)	Passenger's motor	Control unit input	Poor ground	Open circuit in wires or loose or disconnected terminals
All windows do not operate.		1	2	3												LHD: G202 RHD: G204	WHT/BLK or GRN/BLK
Driver's window does not operate.					1				2	3					4	G403	WHT/YEL
Driver's window does not operate in (AUTO)											1		2		3		RED/GRN, RED/YEL* or BLU
Passenger's windows do not operate.	Front					1				3	5	4		2		G403	BLU/YEL, BLU/GRN, BLU/RED[1], BLU/WHT[1] or BLU/BLK
	Left rear						1			3	5	4		2		G403	GRN/YEL, GRN[2], BLU/RED[3], BLU/WHT[3] or GRN/BLK
	Right rear							1		3	5	4		2		G403	YEL[2], YEL/GRN, BLU/RED[2], BLU/WHT[2] or YEL/BLK

*: Standard for some types

Control Unit Input Test

NOTE: The control unit only controls the driver's door window.

Remove the driver's door trim panel and remove the control unit from the panel to disconnect the 4-P and 6-P connectors from the control unit.
Make the following input tests at the harness pins.

NOTE:
- To test the unit, keep the driver's switch connector connected with the door wire harness.
- Recheck the connections between the 4-P and 6-P connectors, and the control unit, then replace the control unit if all input tests prove OK.

***: Standard for some types**

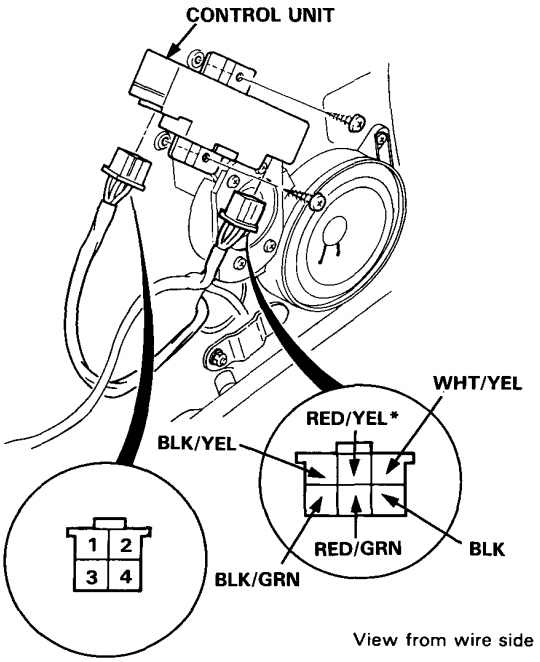

No.	Wire	Test condition	Test: desired result	Possible cause (if result is not obtained)
1	BLK	Under all conditions.	Check for continuity to ground: should be continuity.	• Poor ground (G403). • An open in the wire.
2	WHT/YEL	Ignition switch ON.	Check for voltage to ground: should be battery voltage.	• Blown No. 21 (40 A) or No. 19 (15 A) fuse. • Faulty power window relay. • Poor ground. (LHD: G202, RHD: G204). • An open in the WHT/YEL or WHT/BLK wire.
3	BLK/YEL	Ignition switch ON and driver's switch UP.	Check for voltage to ground: should be battery voltage as the switch is turned.	• Faulty driver's switch. • An open in the wire.
4	BLK/GRN	Ignition switch ON and driver's switch DOWN.		
5	RED/YEL*	Ignition switch ON and driver's switch UP (AUTO).		
6	RED/GRN	Ignition switch ON and driver's switch DOWN (AUTO).		
7	No. 3 and No. 4	Connect the WHT/YEL terminal to the No. 1 terminal, and the BLK terminal to the No. 2 terminal.	Check for resistance between the No. 3 and No. 4 terminals: should indicate between 20—50 ohms as the motor runs.	• Faulty pulser. • Faulty driver's motor. • An open in the wire.

Driver's Switch Test

1. Remove the door trim panel.
2. Check for continuity between the terminals in each switch position according to the tables.

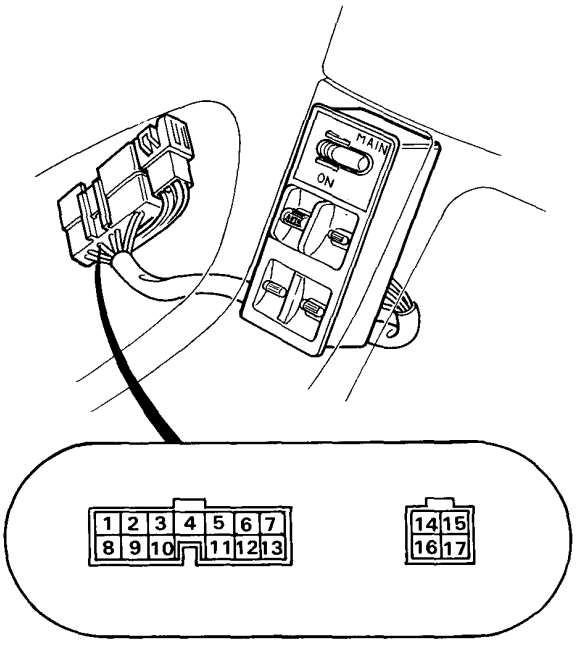

View from wire side

Switch Light

8		1
○	⊖	○

Driver's Switch (*: Standard for some types)

Position \ Terminal	2	12	3	13	11
UP (AUTO)*	○	○	○		
UP		○	○		
OFF					
DOWN			○	○	
DOWN (AUTO)			○	○	○

Front Passenger's Switch

Position	Main Switch \ Terminal	14	15	16	17
UP	ON	○	○	○	○
	OFF	○	○		
OFF	ON		○	○	○
	OFF		○		○
DOWN	ON	○	○	○	○
	OFF	○			○

Right Rear Switch

Position	Main Switch \ Terminal	4	10	16	9
UP	ON	○	○	○	○
	OFF	○	○		
OFF	ON		○	○	○
	OFF		○		○
DOWN	ON	○	○	○	○
	OFF	○			○

Left Rear Switch

Position	Main Switch \ Terminal	7	6	16	5
UP	ON	○	○	○	○
	OFF	○	○		
OFF	ON		○	○	○
	OFF		○		○
DOWN	ON	○	○	○	○
	OFF	○			○

Passenger's Switch Test

1. Remove the door trim panel.
2. Check for continuity between the terminals in each switch position according to the table.

   NOTE: Right front switch shown; rear switches similar.

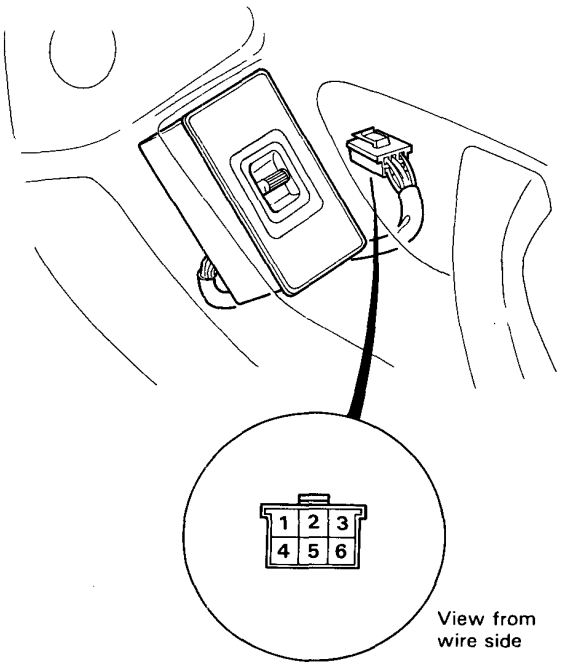

Position \ Terminal	3	2	1	6	4
UP	○—○				
			○—○		
OFF			○—○		
		○—○			
DOWN	○—○				
		○—○			

Switch Replacement

Driver's Switch:

1. Remove the door trim panel.
2. Remove the switch from the door trim panel by releasing the 3 mounting screws.

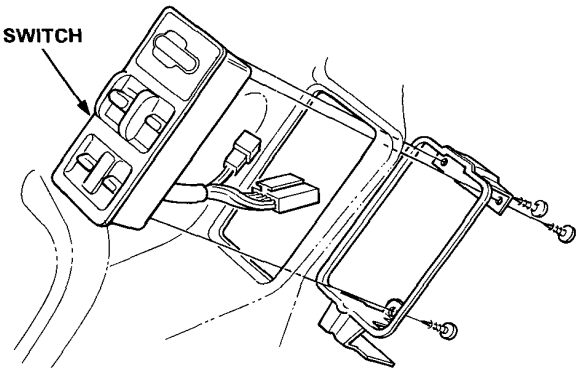

3. If it is necessary to service the driver's switch light, turn the socket 45° counterclockwise to remove it.

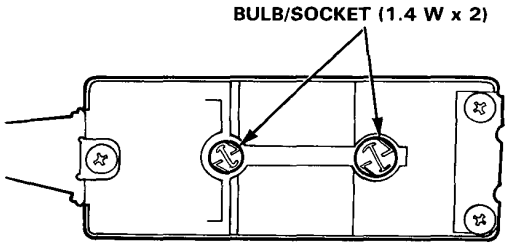

Passenger's Switches:

1. Remove the door trim panel.
2. Remove the switch from the door trim panel by releasing the screw and retainer.

   NOTE: Right front switch shown; rear switches similar.

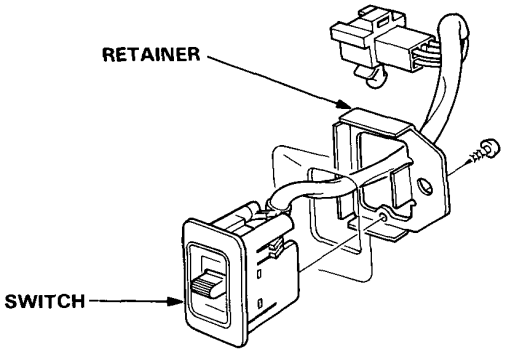

Driver's Motor Test

Motor Test

1. Remove the door trim panel.
2. Remove the control unit from the panel to disconnect the 4-P connector from the power window control unit.
3. Test motor operation by connecting battery voltage to the No. 1 and No. 2 terminals. Test the motor in each direction, by switching the leads from the battery.
4. If the motor does not run, replace it.

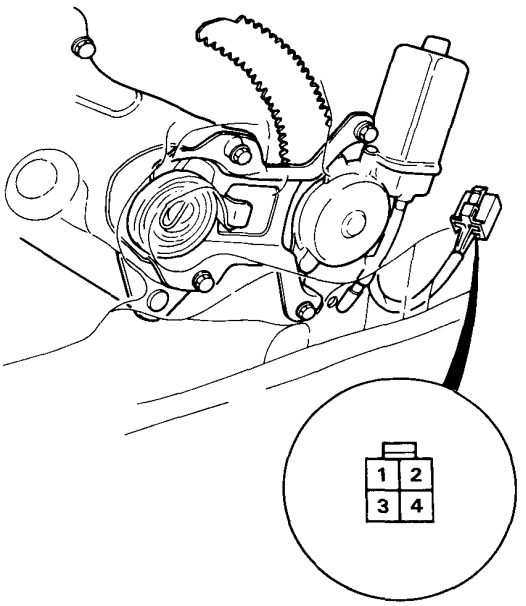

View from wire side

Pulser Test

Measure resistance between the No. 3 and No. 4 terminals when running the motor by connecting battery voltage to the No. 1 and No. 2 terminals.
Ohmmeter should indicate between 20—50 ohms as the motor runs.

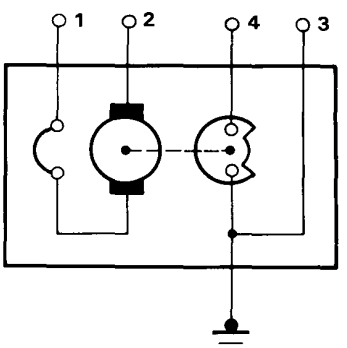

Passenger's Motor Test

1. Remove the door trim panel.
2. Disconnect the 2-P connector from the motor.
3. Test motor operation by connecting battery voltage to the No.1 and No.2 terminals.
   Test the motor in each direction, by switching the leads from the battery.
4. If the motor does not run, replace it.

NOTE: Front motor shown; rear motors similar.

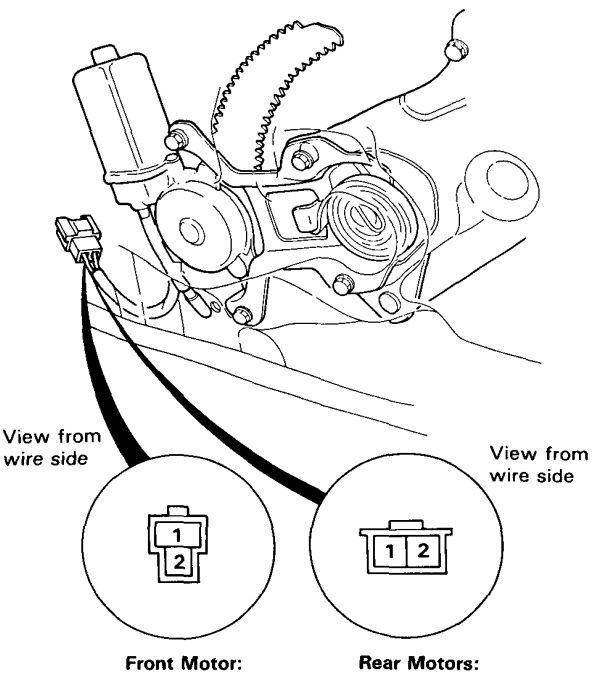

Relay Test

1. Remove the power window relay in the under-hood relay box.

2. There should be continuity between the A and B terminals when the battery is connected to the C and D terminals.
   There should be no continuity when the battery is disconnected.

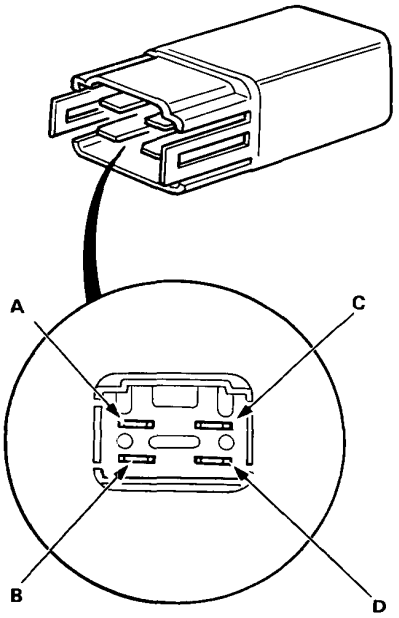

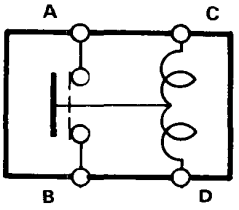

Component Location Index

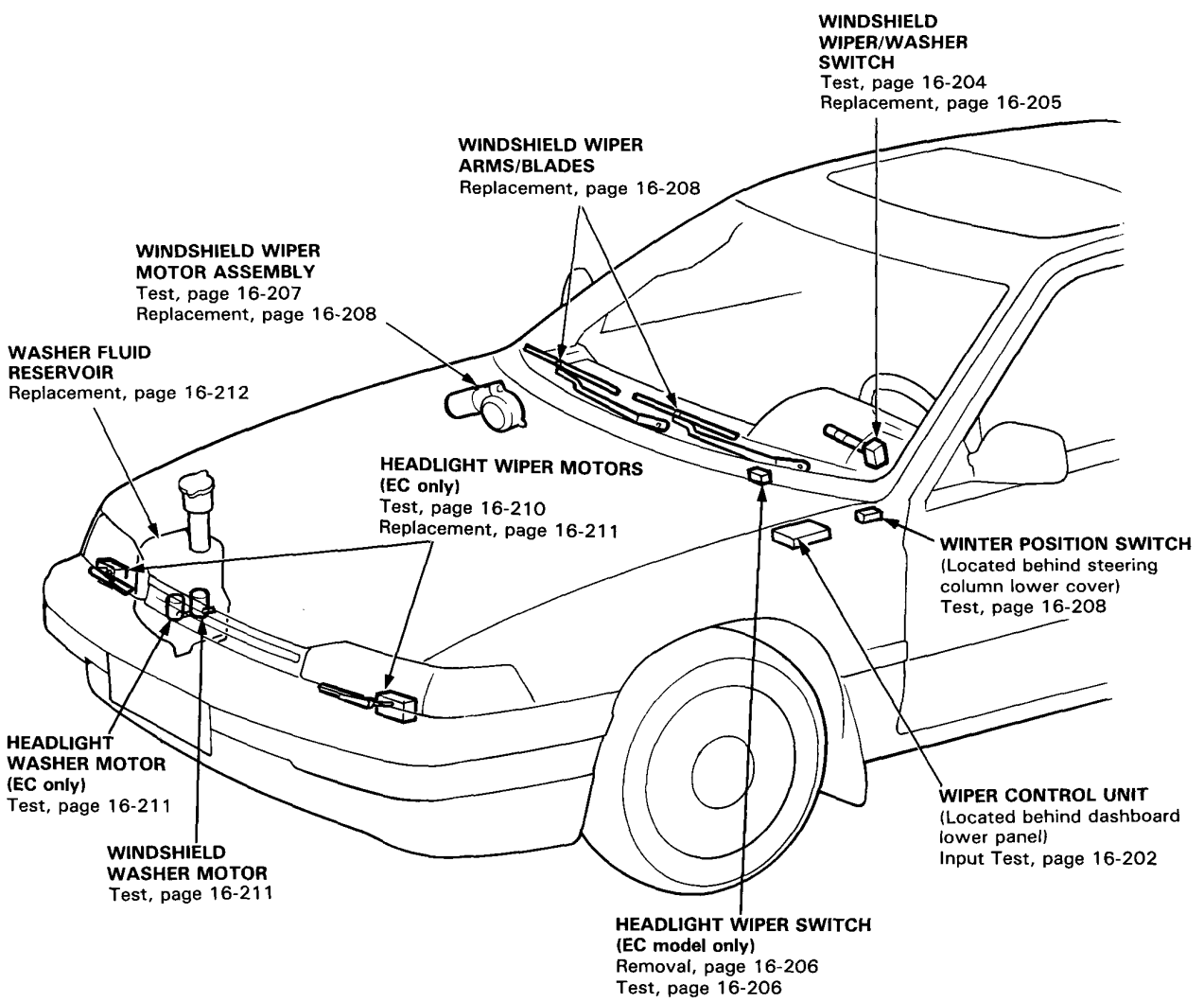

Circuit Diagram (Windshield)

NOTE: Several different wires have the same color. They have been given a number suffix to distinguish them (for example GRN/BLK[1] and GRN/BLK[2] are not the same).

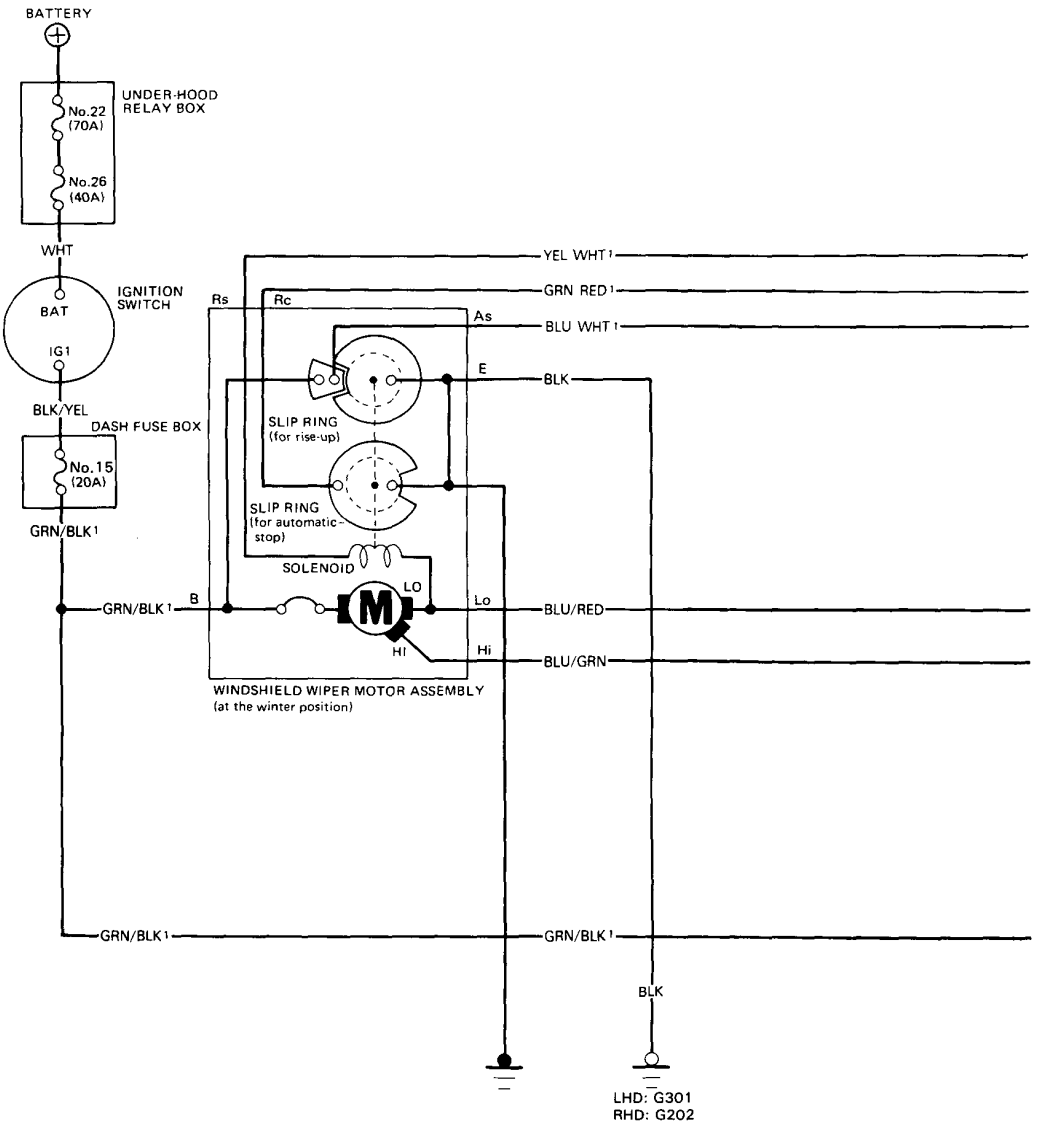

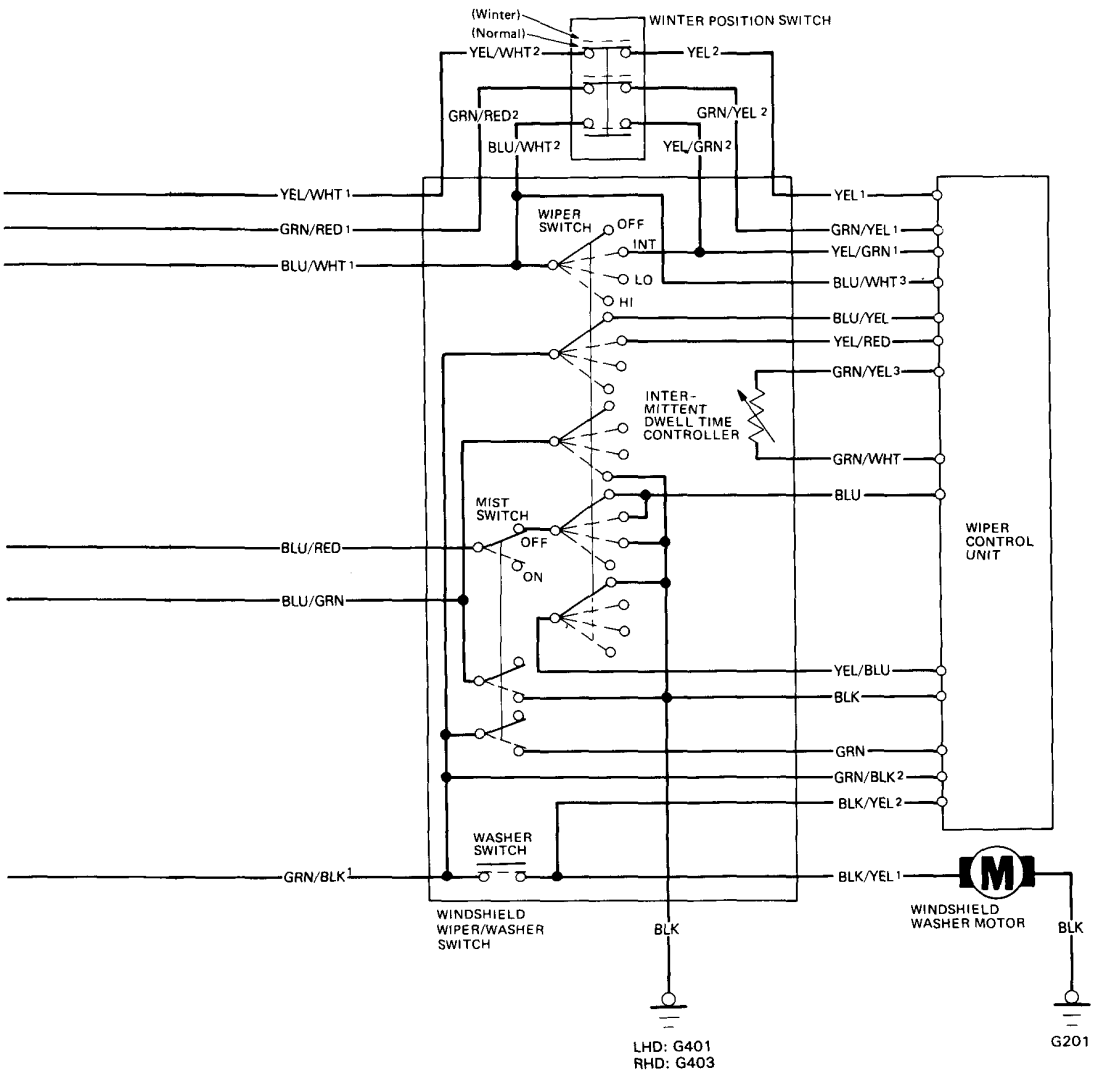
(Winter)
(Normal)
WINTER POSITION SWITCH
YEL/WHT 2
YEL 2
GRN/RED 2
GRN/YEL 2
BLU/WHT 2
YEL/GRN 2
YEL/WHT 1
GRN/RED 1
BLU/WHT 1
WIPER SWITCH
OFF
INT
LO
HI
YEL 1
GRN/YEL 1
YEL/GRN 1
BLU/WHT 3
BLU/YEL
YEL/RED
GRN/YEL 3
INTER-MITTENT DWELL TIME CONTROLLER
GRN/WHT
BLU
MIST SWITCH
OFF
ON
BLU/RED
BLU/GRN
WIPER CONTROL UNIT
YEL/BLU
BLK
GRN
GRN/BLK 2
BLK/YEL 2
WASHER SWITCH
GRN/BLK 1
BLK/YEL 1
M
WINDSHIELD WIPER/WASHER SWITCH
BLK
WINDSHIELD WASHER MOTOR
BLK
LHD: G401
RHD: G403
G201

Circuit Diagram (Headlight)

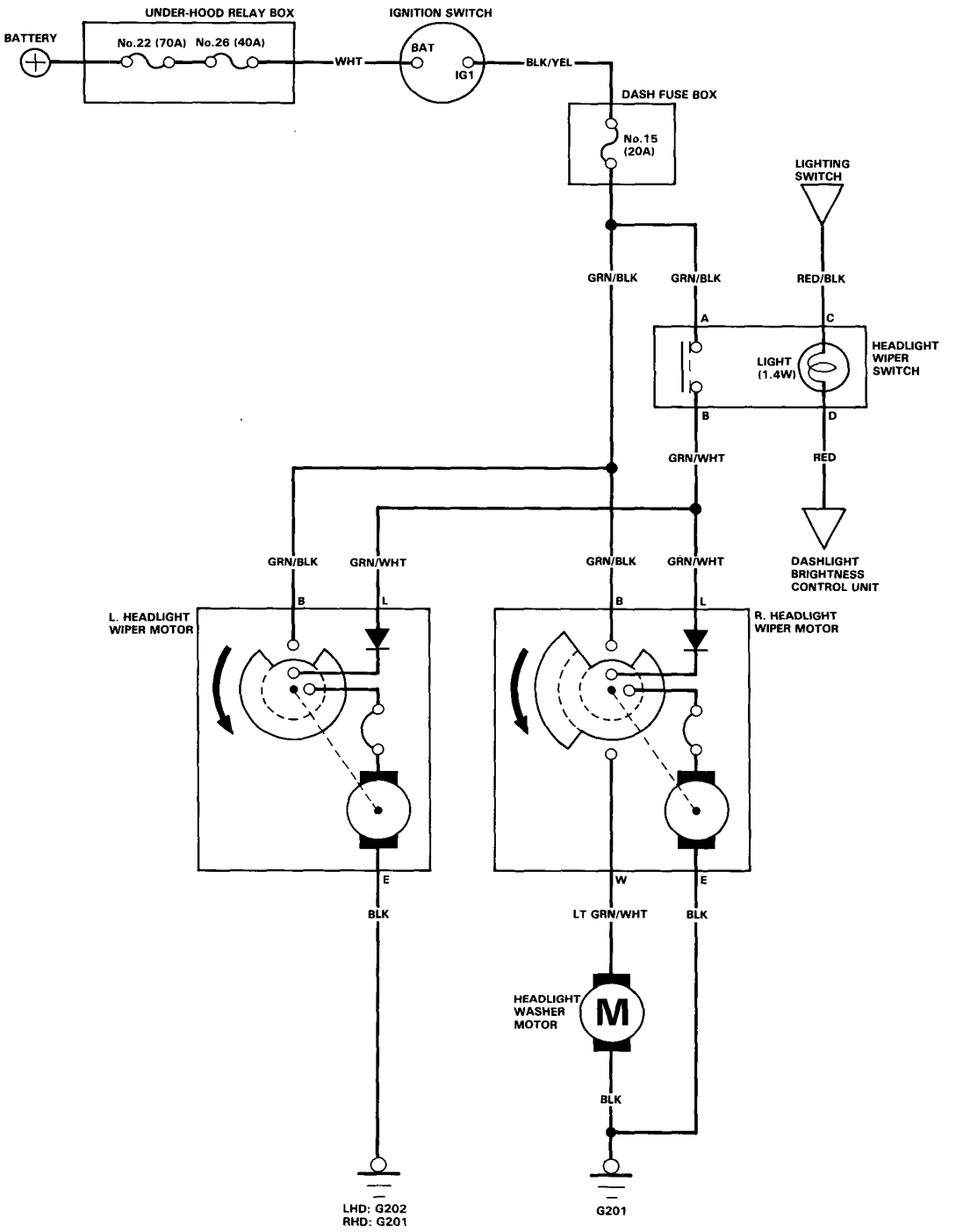

Troubleshooting

NOTE: The numbers in the table show the troubleshooting sequence.

Symptom \ Item to be inspected		Blown No. 15 (20 A) fuse (in the dash fuse box)	Wiper motor assembly: Motor	Wiper motor assembly: Automatic-stop circuit	Wiper motor assembly: Rise-up circuit	Wiper motor assembly: Solenoid	Disconnected wiper linkages	Control unit input	Wiper switch	Intermittent dwell time controller	Mist switch	Winter position switch	Washer switch	Washer motor	Disconnected, blocked washer hoses or clogged outlet	Poor ground	Open circuit in wires or loose or disconnected terminals
Wipers do not operate.	In all positions.	1	2				3									G401 [G403]	GRN/BLK[1]
	In INT.							3	1	2							GRN/YEL[2], GRN/BLK[2], GRN/WHT, YEL/RED or BLU
	In LO or HI		2						1								BLU/RED or BLU/GRN
	In Mist.										1						
Blades do not return to park position when wipers are turned OFF.				1				2								G401 [G403]	BLU/WHT[1], BLU/WHT[3] or BLU
Erratic intermittent cycle or wipers do not operate intermittently.								2		1							GRN/WHT or GRN/YEL[3]
Little or no washer fluid is pumped.													1	2	3	G201	GRN/BLK[1] or BLK/YEL[1]
Blades do not return to normal (recessed) position when winter position switch is ON.					3	4			2			1					GRN/YEL[1], GRN/YEL[2], BLU/YEL, GRN/RED[1], GRN/RED[2], YEL/BLU, YEL/WHT[1], YEL/WHT[2], YEL[1] or YEL[2]
Wipers do not operate simultaneously with washer.								1									BLK/YEL[2]

[ ]: RHD

Control Unit Input Test

Remove the dashboard lower panel to disconnect the 6-P and 8-P connectors from the control unit.
Make the following input tests at the harness pins.

NOTE:
- Several different wires have the same color. They have been given a number suffix to distinguish them (for example GRN/YEL[1] and GRN/YEL[2] are not the same).
- Recheck connections between the 6-P and 8-P connectors, and the control unit, then replace the control unit if all input tests prove OK.

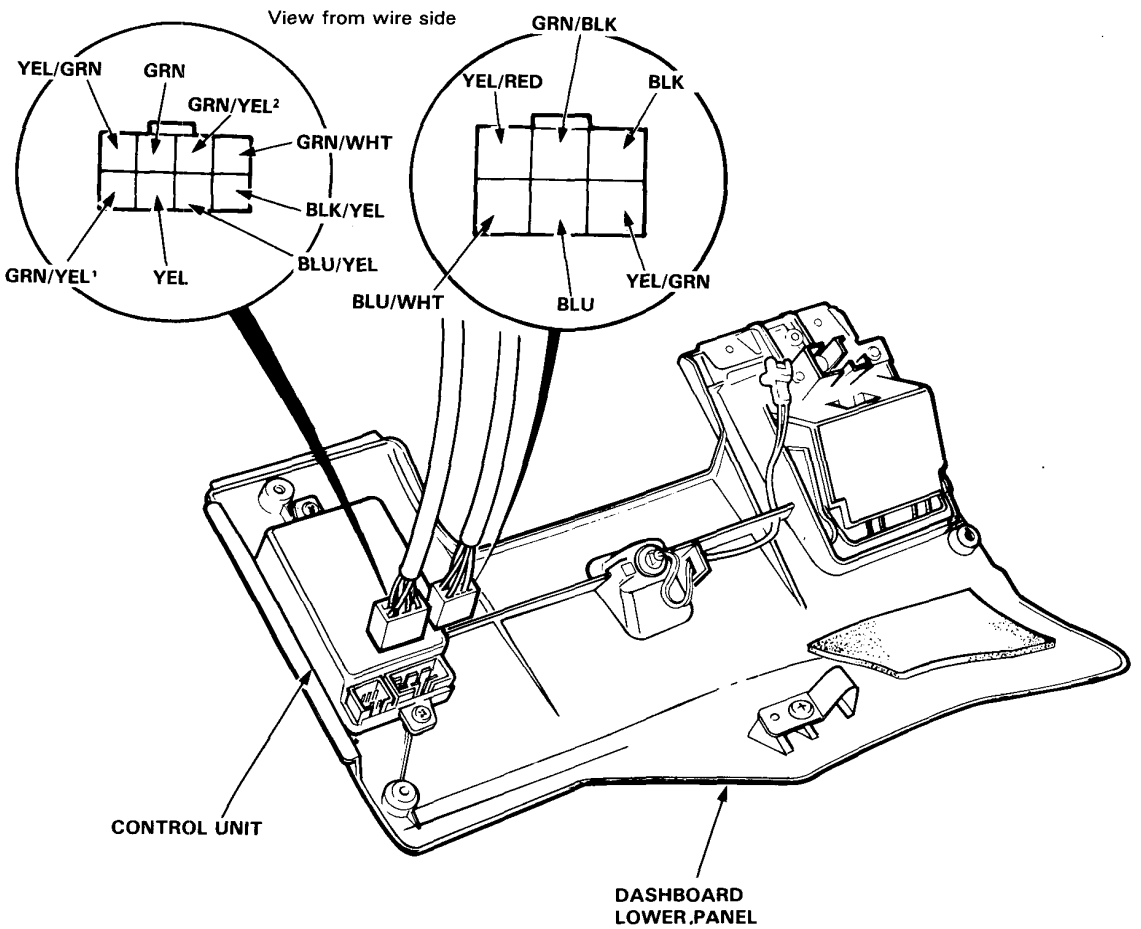

No.	Wire	Test condition	Test: desired result	Possible cause (if result is not obtained)
1	BLK	Under all conditions.	Check for continuity to ground: should be continuity.	• Poor ground (LHD: G401, RHD: G403). • Faulty wiper switch. • An open in the wire.
2	GRN/BLK	Ignition switch ON.	Check for voltage to ground: should be battery voltage.	• Blown No.15 (20 A) fuse. • Faulty wiper switch. • An open in the wire.
3	GRN/YEL[2] and GRN/WHT	Intermittent dwell time control ring turned.	Check for resistance between the GRN/YEL[2] and GRN/WHT terminals: should vary from 0 to 30,000 ohms as the ring is turned.	• Faulty intermittent dwell time controller. • An open in the wire.
4	BLK/YEL	Ignition switch ON and washer switch ON.	Check for voltage to ground: should be battery voltage as the washer switch is pulled.	• Faulty washer switch. • An open in the wire.
5	BLU	Ignition switch ON, wiper switch OFF and mist switch OFF.	Attach to ground: Wiper motor should run at low speed.	• Faulty wiper switch. • Faulty mist switch. • Faulty wiper motor. • An open in the BLU or BLU/RED wire.
6	BLU/WHT	Ignition switch OFF, wiper switch OFF and wiper blades in extended position.	Check for continuity to ground: should be continuity.	• Faulty wiper motor (automatic-stop circuit). • An open in the wire.
7	YEL/GRN	Wiper switch in INT, winter position switch ON and wiper blades in extended position.	Check for continuity to ground: should be continuity.	• Faulty wiper switch. • Faulty wiper motor (automatic-stop circuit). • Poor ground (LHD: G301, RHD: G202). • An open in the YEL/GRN or BLU/WHT wire.
		Wiper switch OFF, winter position switch OFF and wiper blades in extended position.	Check for continuity to ground: should be continuity.	• Faulty winter position switch. • An open in the YEL/GRN or BLU/WHT wire.
8	BLU/YEL	Ignition switch ON and wiper switch OFF.	Check for voltage to ground: should be battery voltage.	• Faulty wiper switch. • An open in the wire.
9	YEL/RED	Ignition switch ON and wiper switch in INT.		
10	YEL/BLU	Wiper switch OFF.	Check for continuity to ground: should be continuity.	• Faulty wiper switch. • An open in the wire.
11	GRN	Ignition switch ON and mist switch ON.	Check for voltage to ground: should be battery voltage.	• Faulty mist switch. • An open in the wire.
12	GRN/YEL[1]	Winter position switch ON and wiper blades in exposed position.	Check for continuity to ground: should be continuity.	• Faulty winter position switch. • Faulty wiper motor (rise-up circuit). • An open in the GRN/YEL[1] or GRN/RED wire.
13	YEL	Winter position switch ON, ignition switch OFF, wiper switch in LOW and mist switch OFF, then with battery positive to the YEL terminal, connect negative to ground momentarily.	Check wiper motor solenoid operation: Solenoid in the wiper motor should click as the battery is connected momentarily.	• Faulty wiper motor (soleniod). • Faulty winter position switch. • An open in the YEL and YEL/WHT wire.

Wiper/Washer Switch Test

1. Remove the dashboard lower panel to disconnect the 6-P and the 8-P connectors from the wiper control unit on the lower panel.

2. Disconnec the 10-P connector from the side wire harness.

3. Remove the steering column lower cover to disconnect the 6-P connector from the winter position switch.

4. Check for continuity between the terminals in each switch position according to the tables.

   NOTE: Several different wires have the same color. They have been given a number suffix to distinguish them (for example BLU/WHT[1] and BLU/WHT[2] are not the same .

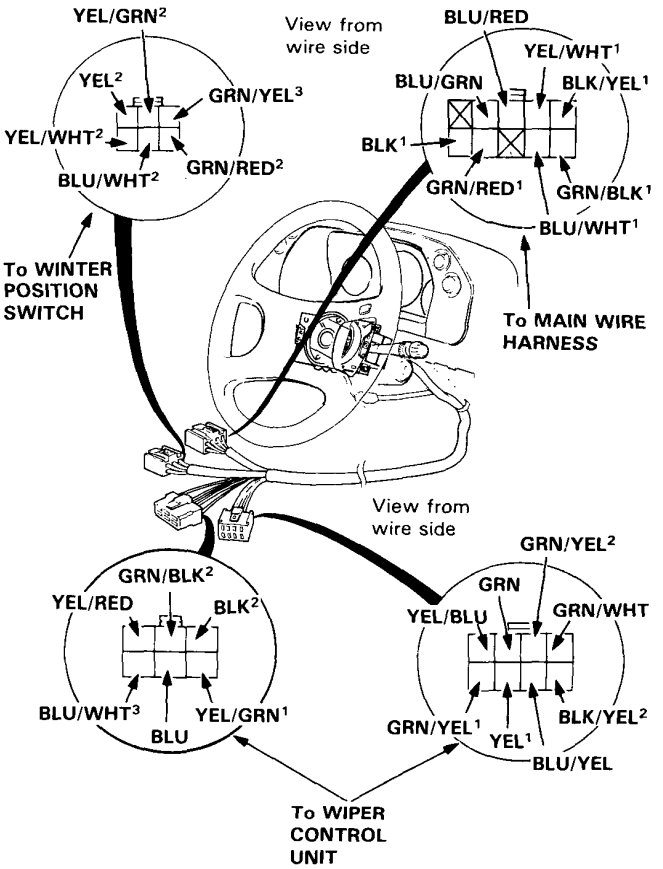

Mist Switch

Terminal / Position	GRN/ BLK[1]	GRN	BLU/ GRN	BLK[1]	BLU/ RED
OFF					○
ON	○	○	○	○	

To next page (A)

(Internal connections)

Wiper Switch

Terminal / Position	GRN/ BLK[1]	BLU/ YEL	YEL/ RED	BLU/ WHT[1]	YEL/ GRN[1]	YEL/ BLU	BLU/ GRN	BLK[1]	BLU
OFF	○	○				○		○	○
INT	○		○	○	○				○
LO								○	
HI							○	○	

Washer Switch

Terminal / Position	GRN/BLK[1]	BLK/YEL[1]
OFF		
ON	○———	———○

(A)

From previous page

Intermittent Dwell Time Controller

Terminal / Position	GRN/YEL[3]		GRN/WHT
Control ring turned	○———	0–30 ± 6 kΩ at 20°C (70°F)	———○

5. There should be continuity:
   - Between the YEL[1] and YEL[2] terminals.
   - Between the GRN/YEL[1] and GRN/YEL[2] terminals.
   - Between the YEL/WHT[1] and YEL/WHT[2] terminals.
   - Between the GRN/RED[1] and GRN/RED[2] terminals.
   - Between the GRN/BLK[1] and GRN/BLK[2] terminals.
   - Between the BLU/WHT[1], BLU/WHT[2] and BLU/WHT[3] terminals.
   - Between the BLK/YEL[1] and BLK/YEL[2] terminals.
   - Between the BLK[1] and BLK[2] terminals.
   - Between the YEL/GRN[1] and YEL/GRN[2] terminals.

Wiper/Washer Switch Replacement

1. Remove the dashboard lower panel and disconnect 6-P and 8-P connectors from the wiper control unit on the lower panel.

2. Disconnect the 10-P connector from the side wire harness.

3. Remove the steering wheel, then remove the lower and upper covers from the steering column and disconnect the 6-P connector from the winter position switch.

4. Remove the 2 screws and slide the wiper/washer switch out of the housing as shown.

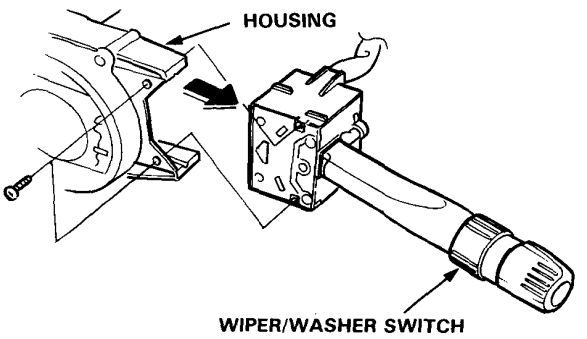

Headlight Wiper Switch Removal

1. Remove the dashboard lower panel.
2. Push the switch from behind the instrument panel, then disconnect the 4-P connector to remove the switch.

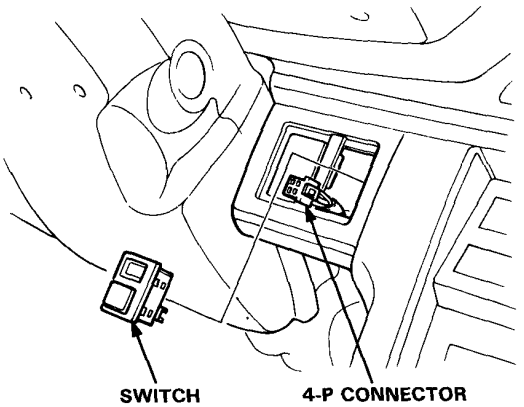

3. Turn the socket 45° counterclockwise to remove it.

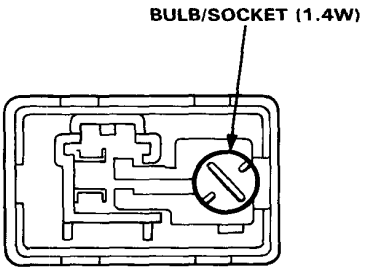

Headlight Wiper Switch Test

1. Remove the wiper switch from the instrument panel.
2. Check for continuity between the terminals in each switch position according to the table.

Terminal / Position	A	B	C		D
OFF					
ON	○	○	○	○	○

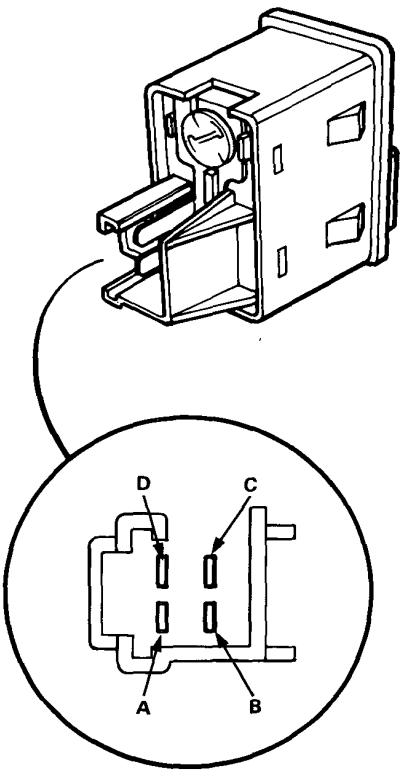

Wiper Motor Test

1. Disconnect the 5-P and 3-P connectors of the wiper motor assembly.

2. Test motor operation:
   LOW SPEED: Connect battery positive to the B (GRN/BLK) terminal and negative to the Lo (BLU/RED) terminal.
   HIGH SPEED: Connect battery positive to the B (GRN/BLK) terminal and negative to the Hi (BLU/GRN) terminal.

3. If the motor fails to run smoothly, replace it.

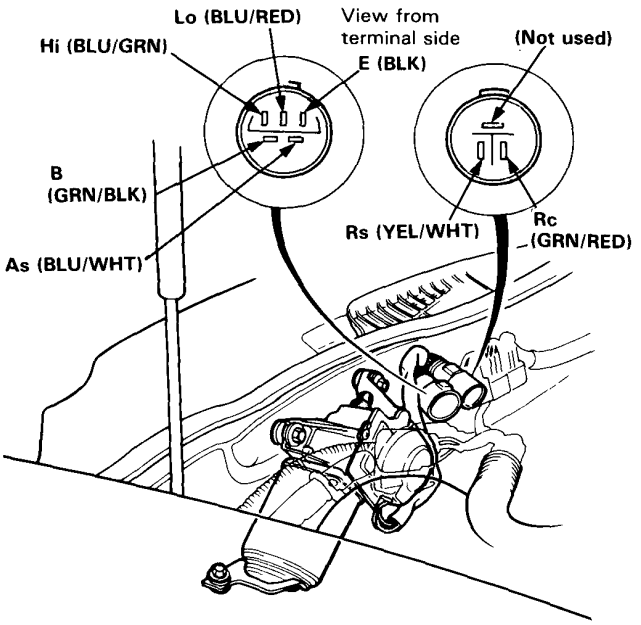

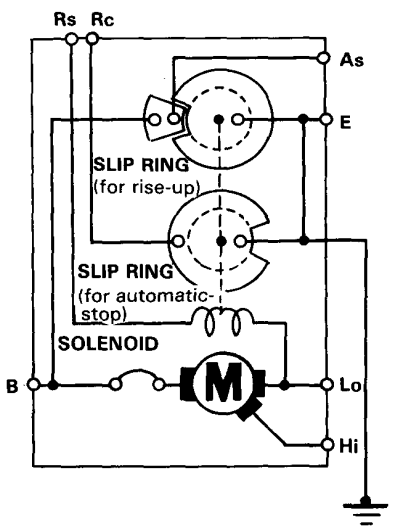

4. Check for continuity between the terminals according to the table.

Wiper Blade \ Terminal	B (GRN/BLK)	As (BLU/WHT)	E (BLK)	Rc (GRN/RED)
At winter (exposed) park position	○——	——○	○——	——○
At normal (recessed) park position		○——	——○	
At extended position		○——	——○	——○

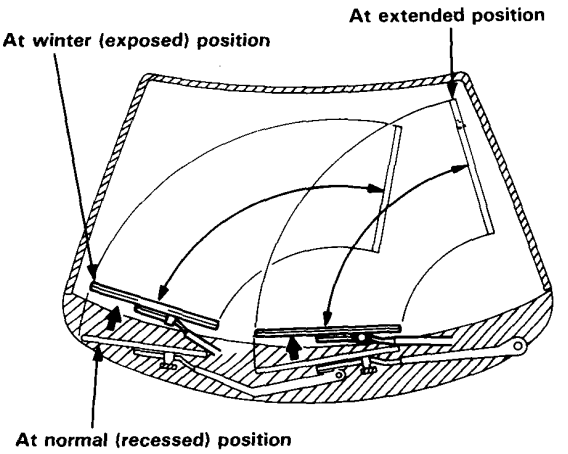

5. With battery positive to the Rs (YEL/WHT) terminal, connect negative to the Lo (BLU/RED) terminal momentarily.
   Check the solenoid in the wiper motor assembly clicks.
   If not, replace the wiper motor assembly.

Winter Position Switch Test

1. Remove the steering column lower cover to disconnect the 6-P connector from the switch on the lower panel.

2. Check for continuity between the terminals in each switch position according to the table.

Position \ Terminal	A	B	C	D	E	F
ON (Recessed)	O—O		O—O			
OFF (Exposed)					O—O	

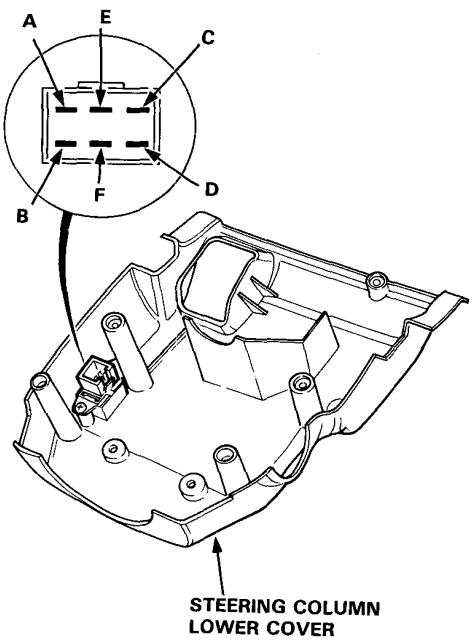

Wiper Motor Replacement

Removal

1. Position the wiper arms to the winter (exposed) position where they are not concealed.

2. Pull the lock pin tab with the wiper arm lifted away from the windshield to release the spring pressure.

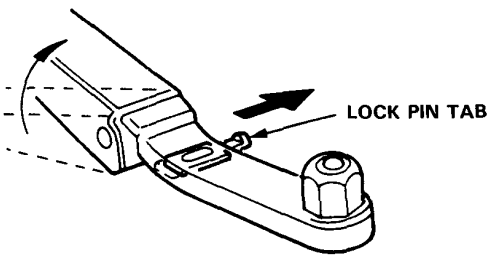

3. Open the hood.

4. Remove the cap nuts and the wiper arms.

5. Remove the hood seal, windshield lower molding and air scoops by prying off the trim clips and removing the screws.

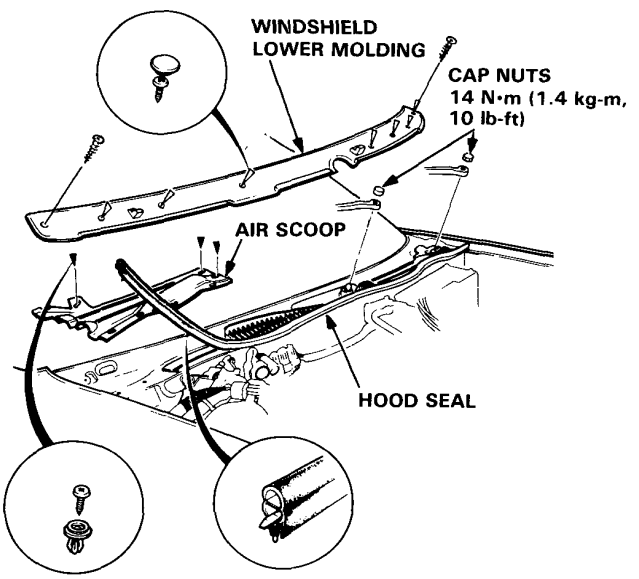

6. Remove the wiper maintenance grommet, then pry the wiper linkage off the motor arm with a screwdriver.

7. Remove the wiper connectors from the bracket, then disconnect the 5-P and 3-P connectors from the wiper motor assembly.

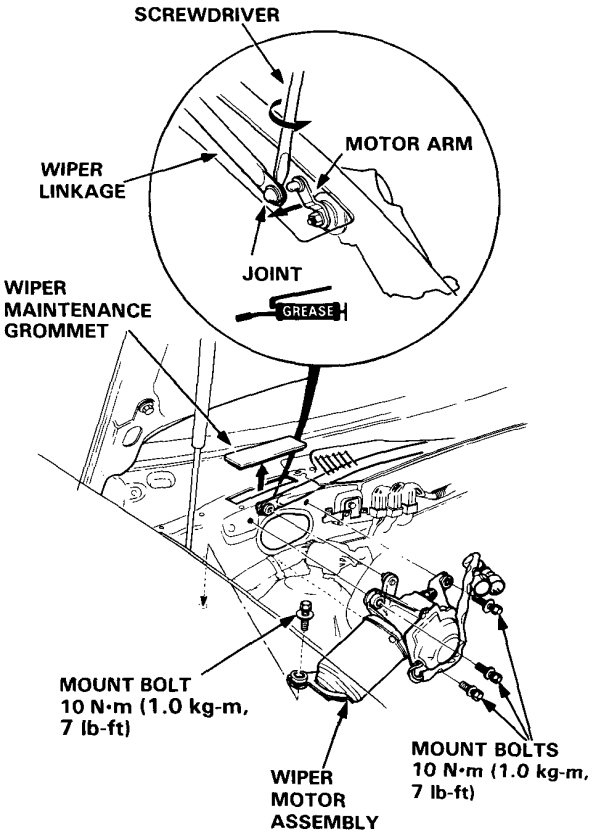

8. Remove the 4 mount bolts and the wiper motor assembly.

Installation

Install the motor in the reverse order of removal, and also:

1. Coat the joints with grease and make sure the linkages move smoothly.

2. Slide the wiper blade off the arm end while pushing the release lever inside, and separate the blades from the arms, to install the wiper arms.

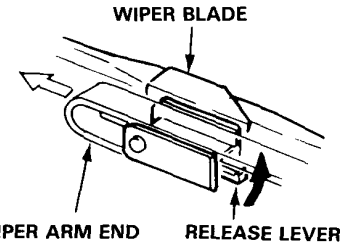

3. Before installing the wiper arms, turn the ignition switch ON and the wiper switch OFF, then set the winter position switch in ON (normal).

4. To install the wiper arms, position them on the bottom line of the stopper as shown and mount the cap nuts.

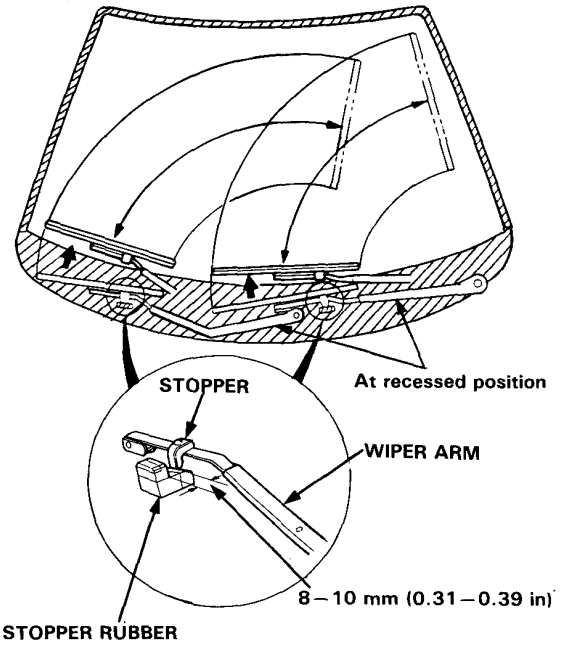

5. Install the wiper blades, then make sure that the wiper system operates properly.

Headlight Wiper Motor Test

1. Remove the front bumper and disconnect the 4-P connector for the right motor, or the 3-P connector for the left motor.
2. Test motor operation by connecting battery positive to the L terminal and negative to the E terminal.
3. If the motor fails to run smoothly, replace it.

Left Motor: **Right Motor:**

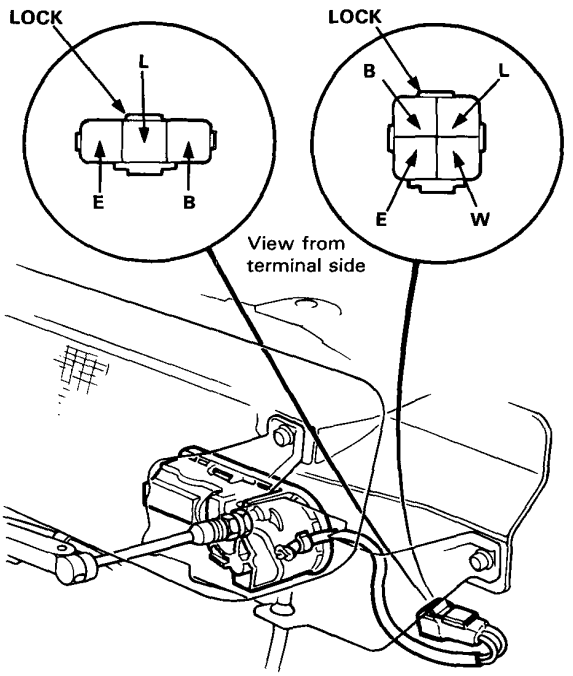

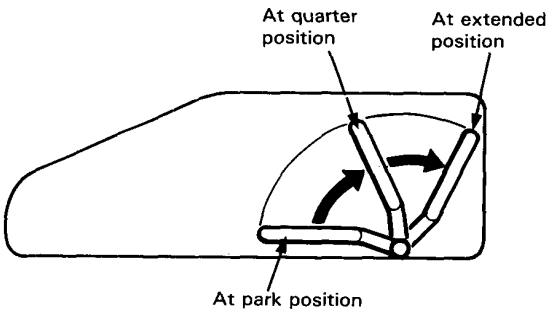

4. Check for continuity between the terminals according to the tables.

Left Motor

Wipers Blade \ Terminal	B		L
At park position			
At extended position	○	◀	○

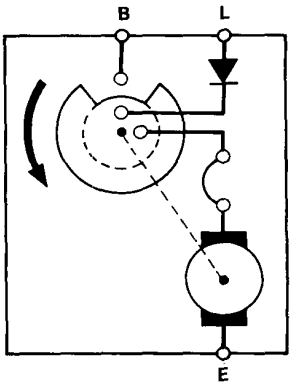

Right Motor

Wipers Blade \ Terminal	W	B		L
At park position				
At quarter position	○	○	◀	○
At extended position		○	◀	○

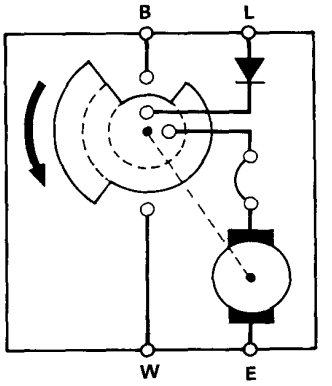

Headlight Wiper Motor Replacement

1. Remove the front bumper and disconnect the connector from the wiper motor bracket.

2. Disconnet the washer hose from the nozzle, then remove the nut and the wiper arm from the motor shaft.

3. Disconnect the washer hose from the joint, then remove the 3 mount bolts and the wiper motor with the bracket.

4. Separate the wiper motor and bracket by removing the special nut.

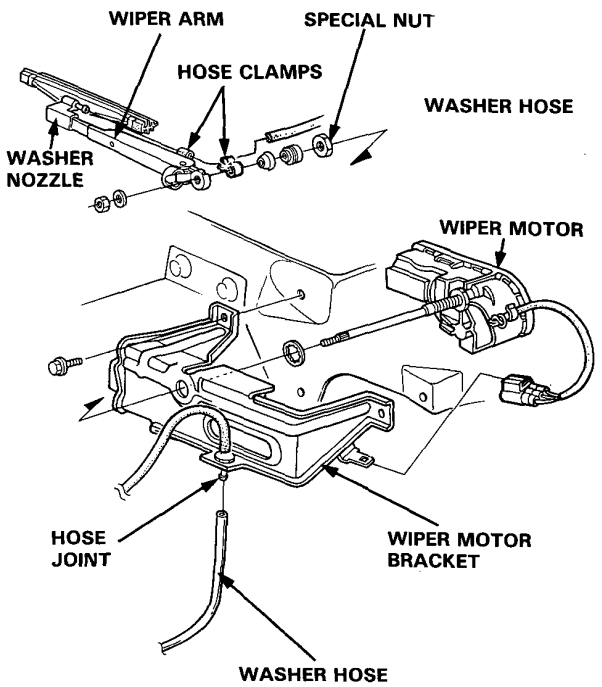

Washer Motor Test

1. Remove the front bumper and disconnect the 2-P connector from the washer motor.

2. Test motor operation by connecting battery positive to the ⊕ terminal and negative to the ⊖ terminal.

3. If the motor fails to run, replace it.

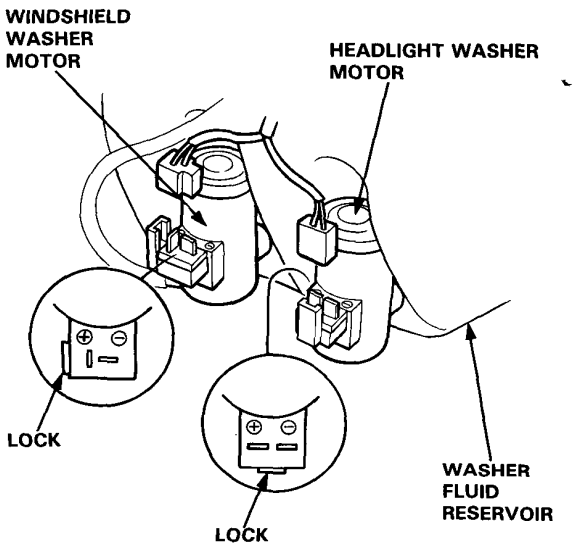

4. If necessary, disconnect the hose from the motor's outlet, then pull the motor out of the reservoir.

Washer Replacement

1. Remove the bumper, then remove the washer reservoir by removing the cap and the 3 mount bolts.
2. Disconnect the hoses and the 2-P connectors from the washer motors, then the 2-P connector from the washer fluid level switch.
3. Remove the washer nozzles by releasing the retaining pawls and pushing them out from the underside of the hood.

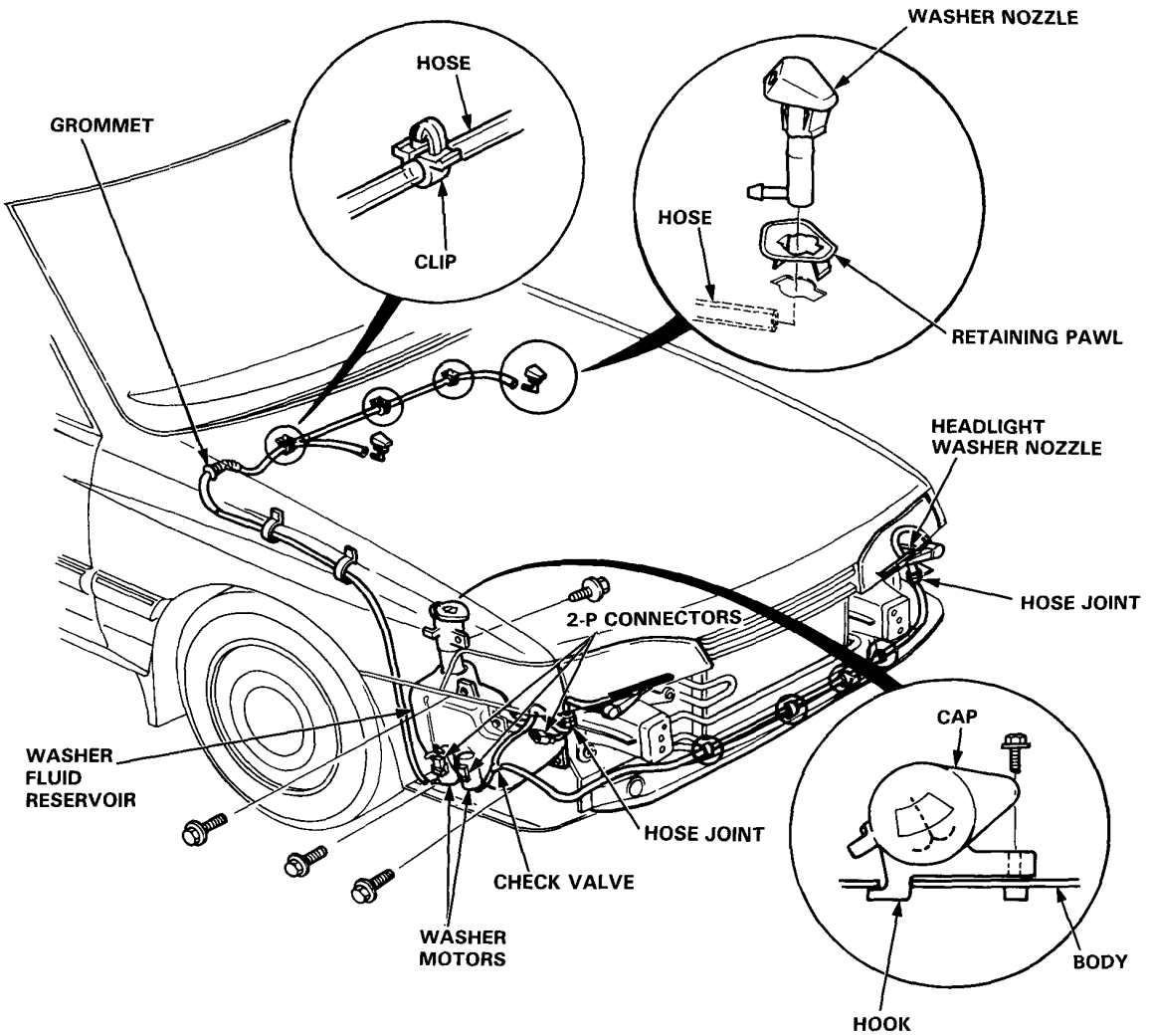

NOTE:
- Take care not to pinch the hoses during reinstallation.
- Install the grommets firmly.
- After installation, adjust the washer nozzles.

Component Location Index

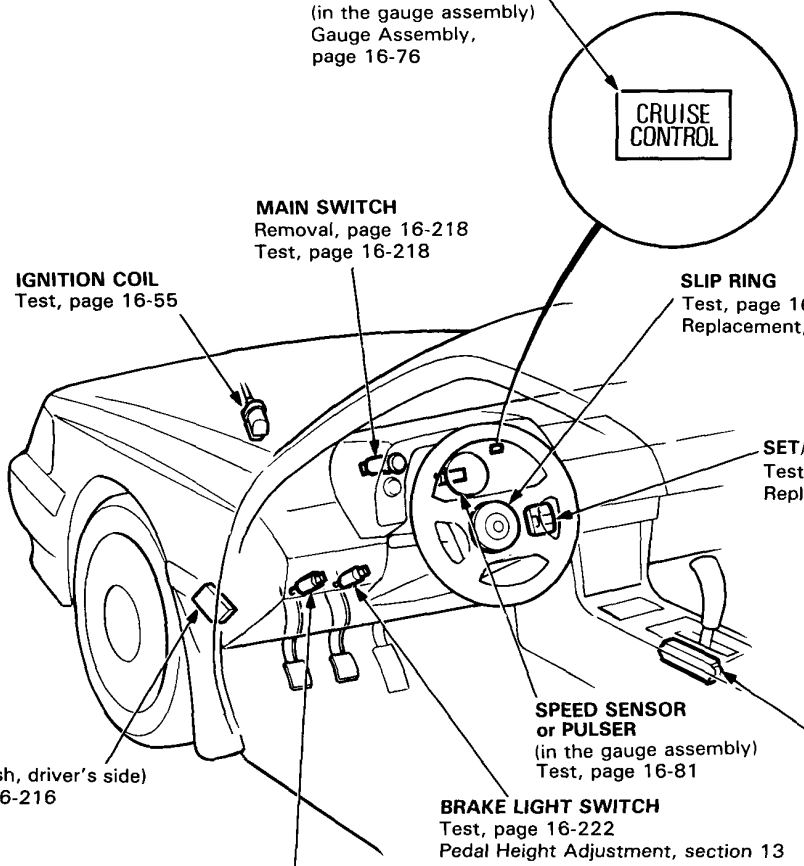

INDICATOR LIGHT and DIMMING CIRCUIT
(in the gauge assembly)
Gauge Assembly, page 16-76

MAIN SWITCH
Removal, page 16-218
Test, page 16-218

IGNITION COIL
Test, page 16-55

SLIP RING
Test, page 16-221
Replacement, page 16-221

SET/RESUME/CANCEL SWITCH
Test, page 16-220
Replacement, page 16-221

SPEED SENSOR or PULSER
(in the gauge assembly)
Test, page 16-81

CONTROL UNIT
(Located under dash, driver's side)
Input Test, page 16-216

BRAKE LIGHT SWITCH
Test, page 16-222
Pedal Height Adjustment, section 13

SHIFT POSITION CONSOLE SWITCH (A/T only)
Test, page 16-219
Replacement, page 16-99

CLUTCH SWITCH (M/T only)
Test, page 16-219
Pedal Height Adjustment, section 7

ACTUATOR
Solenoid Test, page 16-222
Test, page 16-223
Replacement, page 16-224
Disassembly, page 16-225

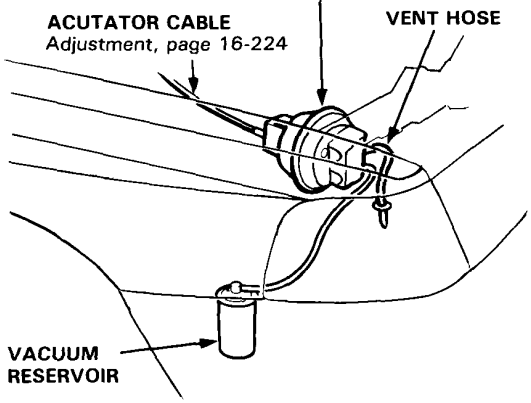

ACUTATOR CABLE
Adjustment, page 16-224

VENT HOSE

VACUUM RESERVOIR

Circuit Diagram

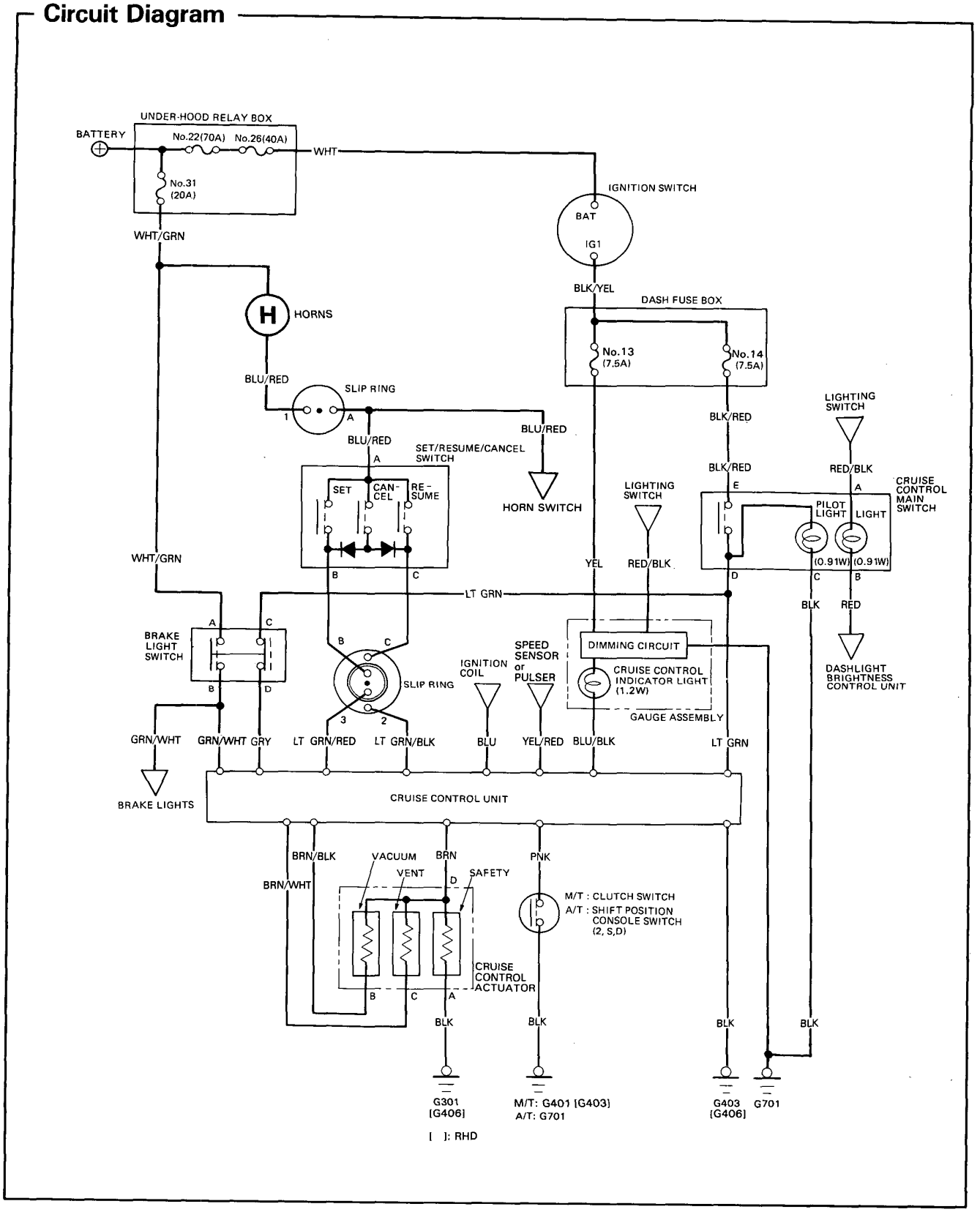

Troubleshooting

NOTE: The numbers in the table show the troubleshooting sequence.

Symptom \ Item to be inspected	Blown No. 14 (7.5 A) fuse (in the dash fuse box)	Main switch	Indicator light and its dimming circuit (in the gauge assembly)	SET/RESUME/CANCEL switch	Actuator cable free play	Actuator	Disconnected, clogged or restricted vacuum lines/stuck check valve/ leaky vacuum reservoir	Clutch switch and mounting (M/T)	Shift position console switch (A/T)	Blown No. 31 (20 A) fuse (in the under-hood relay box)	Brake light switch	Control unit input	Poor ground	Open circuit in wires or loose or disconnected terminals
Cruise control can't be set.	1	2										3	G403 [G406]	LT GRN or BLK/RED
Cruise control can be set, but indicator light does not go on.			1											BLU/BLK
Cruise speed noticeably higher or lower than what was set.												1		
Excessive overshooting and/or undershooting when trying to set speed.					1	2						3		
Steady speed not held even on a flat road with cruise control set.					1	3	2					4		
Car does not decelerate or accelerate accordingly when SET or RESUME button is pushed.				1								2		
Set speed not cancelled when clutch pedal is pushed. (M/T)								1				2		
Set speed not cancelled when shift lever is moved to N. (A/T)									1			2		
Set speed not cancelled when brake pedal is pushed.										1	2	3		
Set speed not cancelled when CANCEL button is pushed.				1								2		
Set speed not resumed when RESUME button is pushed (with main switch on, but set speed temporarily cancelled).				1								2		

[ ]: RHD

Control Unit Input Test

Remove the dashboard lower panel to disconnect the 13-P connector from the control unit.
Make the following input tests at the harness pins.

NOTE: Recheck the connections between the 13-P connector and the control unit, then replace the control unit if all input tests prove OK.

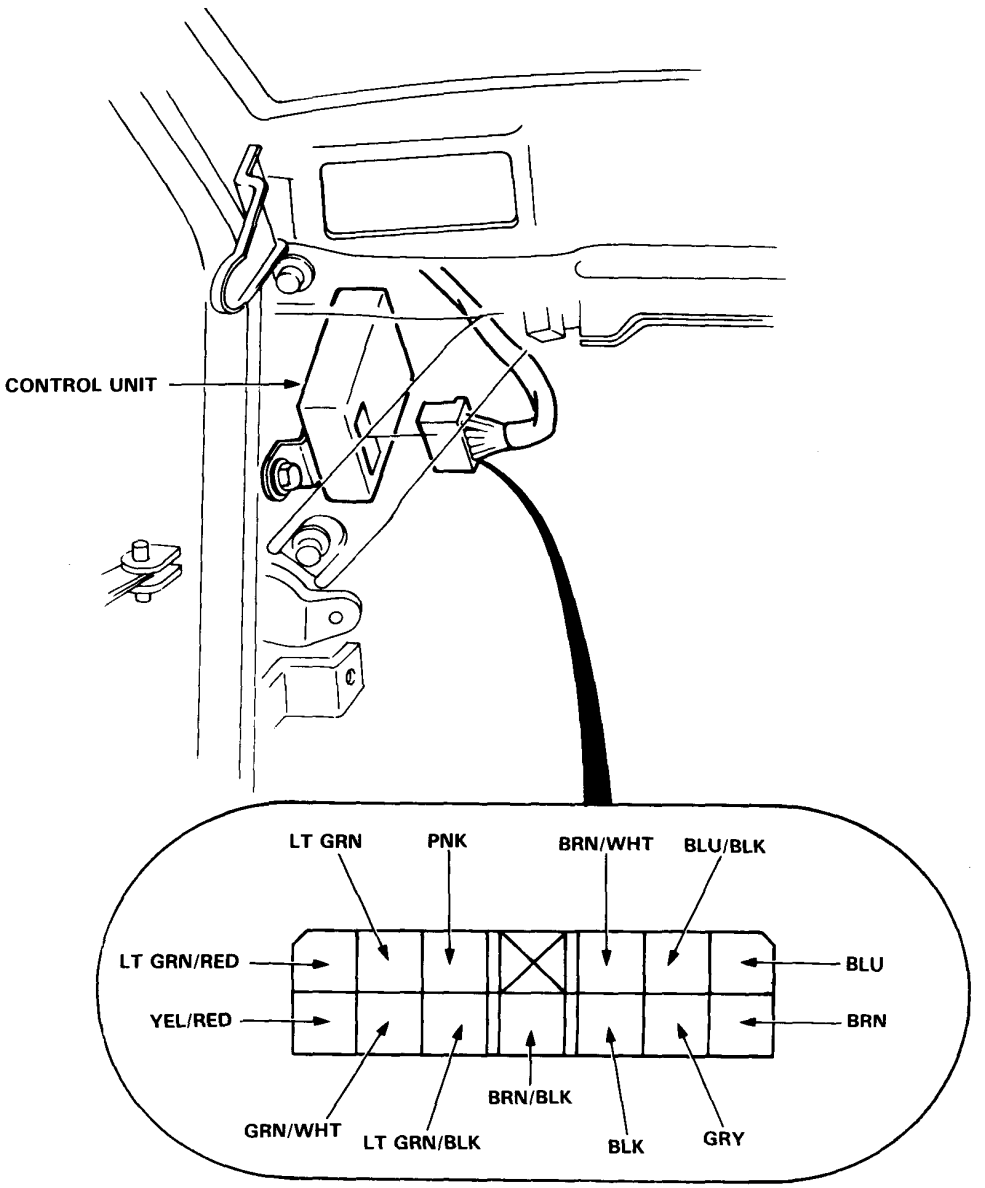

View from wire side

No.	Wire	Test condition	Test: desired result	Possible cause (if result is not obtained)
1	BLK	Under all conditions.	Check for continuity to ground: should be continuity.	• Poor ground (LHD: G403, RHD: G406). • An open in the wire.
2	LT GRN	Ignition switch ON and main switch ON.	Check for voltage to ground: should be battery voltage.	• Blown No. 14 (7.5 A) fuse. • Faulty main switch. • An open in the LT GRN or BLK/RED wire.
3	LT GRN/ BLK	Resume or cancel switch pushed.	Ground each terminal: Horns should sound as the switch is pushed.	• Blown No. 31 (20 A) fuse. • Faulty SET/RESUME/CANCEL switch. • Faulty slip ring. • Faulty horn. • An open in the WHT/GRN, BLU/RED, LT GRN/BLK or LT GRN/RED wire.
4	LT GRN/ RED	Set or cancel switch pushed.		
5	PNK	M/T: Clutch pedal pushed. A/T: Shift lever in 2, S or D	Check for continuity to ground: should be continuity.	• Faulty or misadjusted clutch switch (M/T). • Faulty shift position console switch (A/T). • Poor ground (M/T-LHD: G401, RHD: G403 / A/T-G701) • An open in the wire.
6	BLU	Start the engine.	Check for voltage to ground: should be battery voltage.	• Faulty ignition system. • An open in the wire.
7	YEL/RED	Ignition switch ON and main switch ON. Raise the front of the car and rotate one wheel slowly.	Check for voltage between the LT GRN ⊕ and YEL/RED ⊖ terminals: should be 0—12—0—12 V repeatedly.	• Faulty speed sensor or pulser. • An open in the wire.
8	GRY	Ignition switch ON, main switch ON and brake pedal pushed, then released.	Check for voltage to ground: should be 0 V with the pedal pushed and battery voltage with the pedal released.	• Faulty brake light switch. • An open in the GRY or LT GRN wire.
9	GRN/WHT	Brake pedal pushed, then released.	Check for voltage to ground: should be battery voltage with the pedal pushed, and 0V with the pedal released.	• Faulty brake light switch. • An open in the wire.
10	BLU/BLK	Ignition switch ON.	Attach to ground: Indicator light in the gauge assembly comes on.	• Blown bulb. • Blown No. 13 (7.5 A) fuse. • Faulty dimming circuit in the gauge assembly. • An open in the wire.
11	BRN/WHT	Under all conditions.	Check for resistance to ground: should be 80—120 Ω.	• Faulty actuator solenoid. • Open or short in the wire.
12	BRN	Under all conditions.	Check for resistance to ground: should be 40—60 Ω.	
13	BRN/BLK	Under all conditions.	Check for resistance to ground: should be 70—110 Ω.	

Main Switch Removal

1. Remove the 4 screws, then remove the instrument panel from the dashboard.

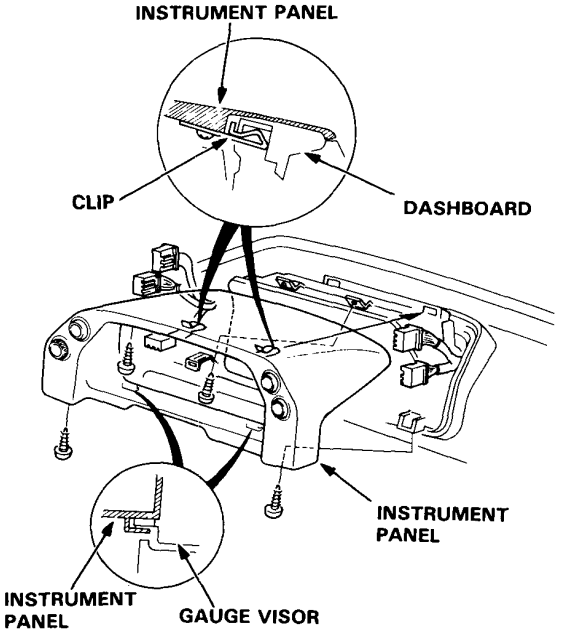

2. Remove the screw from the rear of the instrument panel, then remove the switch.

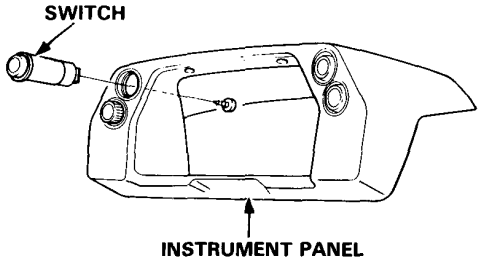

3. Turn the socket 45° counterclockwise to remove it.

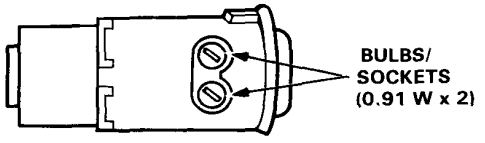

Main Switch Test

1. Remove the instrument panel from the dashboard.
2. Check for continuity between the termnals in each switch position according to the table.

Position \ Terminal	E	D		C	B		A
OFF		○	○	○			
ON	○	○	○	○	○	○	○

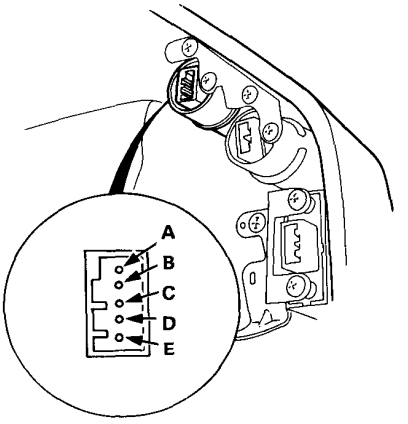

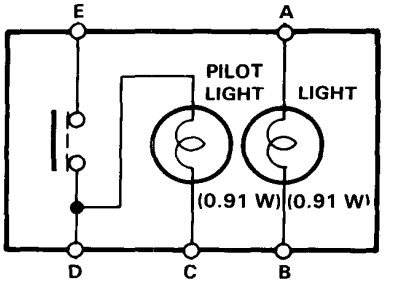

Clutch Switch Test

1. Disconnect the 2-P connector from the switch.
2. Check for continuity between the terminals according to the table.

Clutch Pedal \ Terminal	A	B
RELEASED	○	○
PUSHED		

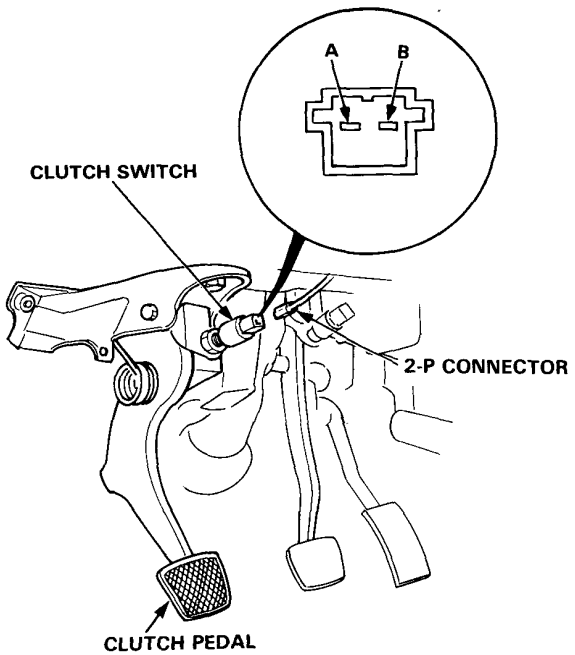

3. If necessary, replace the switch or adjust pedal height (see section 7).

Shift Position Console Switch Test

1. Remove the front console and the center instrument panel, then disconnect the 10-P connector from the console switch.
2. Check for continuity between the terminals in each switch position according to the table.

Shift Position Switch (for cruise control)

Position \ Terminal	1	2
2	○	○
S	○	○
D	○	○
N		
R		
P		

View from wire side

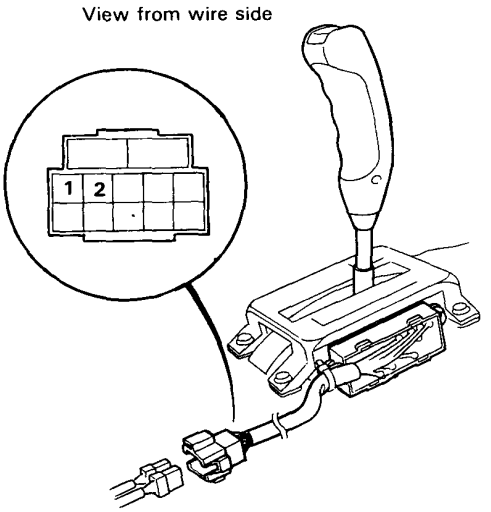

3. If necessary, replace the switch (see page 16-99).

SET/RESUME/CANCEL Switch Test

1. Remove the dashboard lower panel and disconnect the 13-P connector from the side wire harness.

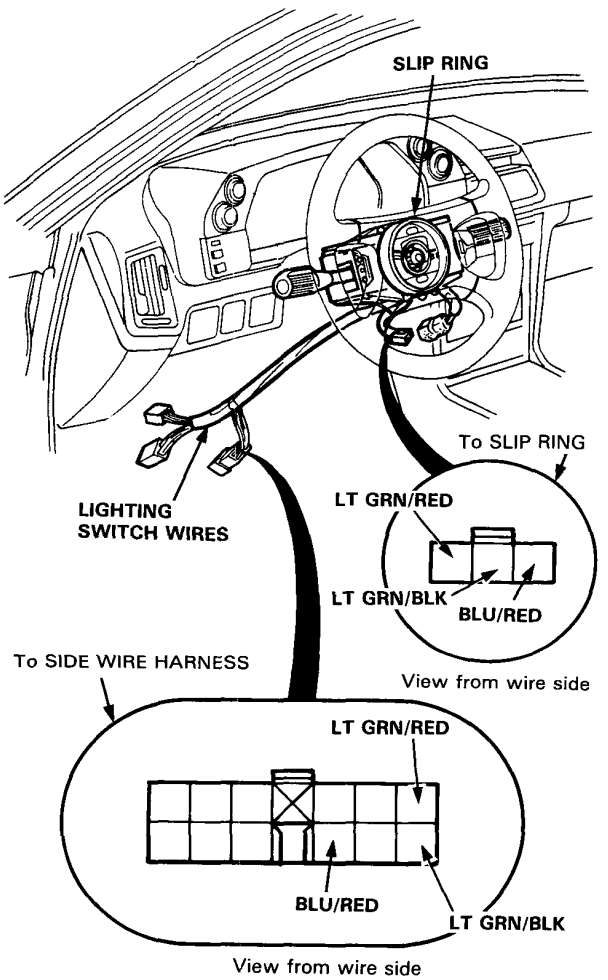

2. Check for continuity between the terminals in each switch position according to the table.

Position \ Terminal	A		B	C
SET (ON)	○	———	○	
RESUME (ON)	○	———		○
CANCEL (ON)	○	▶ ▶	○	○

- If all of the continuity check is OK, the SET/RESUME/CANCEL switch is OK.
- If there is no continuity in one or some switch positions, remove the steering wheel, then turn it over and go to step 3.

3. Repeat step 2, but this time tests at the 3-P connector of the steering wheel.

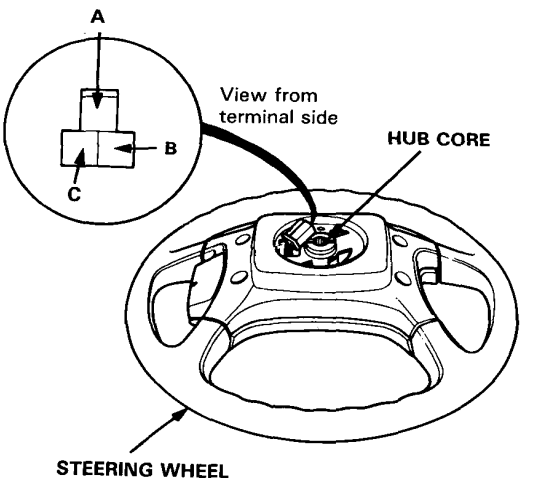

- If there is no continuity in one or some switch positions, repair the SET/RESUME/CANCEL switch.
- If all of the continuity check is OK, remove the steering column lower cover and disconnect the 3-P connector from the slip ring, then check for open in the lighting switch wires (BLU/RED, LT GRN/BLK and LT GRN/RED).
  If the wires are OK, check the slip ring.

SET/RESUME/CANCEL Switch Replacement

1. Remove the steering wheel.
2. Separate the horn cover and the body cover by removing the 4 screws.
3. Remove the 3 screws and the SET/RESUME/CANCEL switch from the steering wheel.

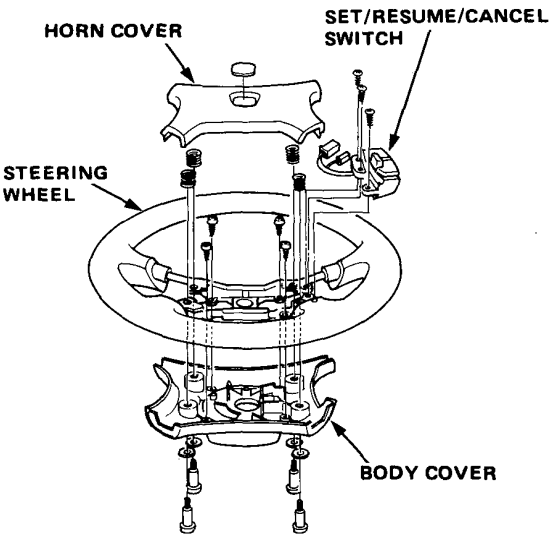

4. If necessary, remove the upper and lower steering column covers, then remove the 4 screws and disconnect the 3-P connector to remove the slip ring from the combination switch.

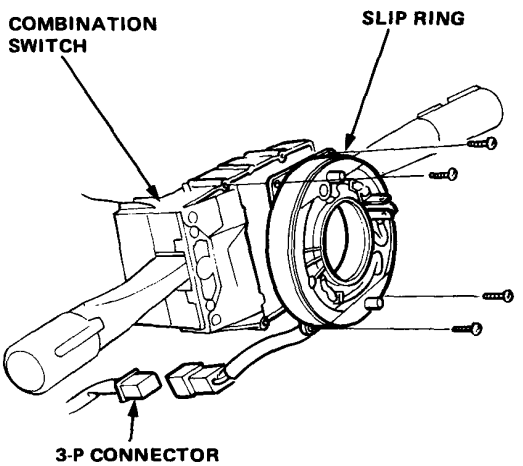

Slip Ring Test

1. Remove the steering wheel.
2. Remove the steering column lower cover, then disconnect the 3-P connector from the lighting switch wire.
3. There should be continuity between the No.1 and A terminals, the No.3 and B terminals, and the No.2 and C terminals, as you turn the slip ring.

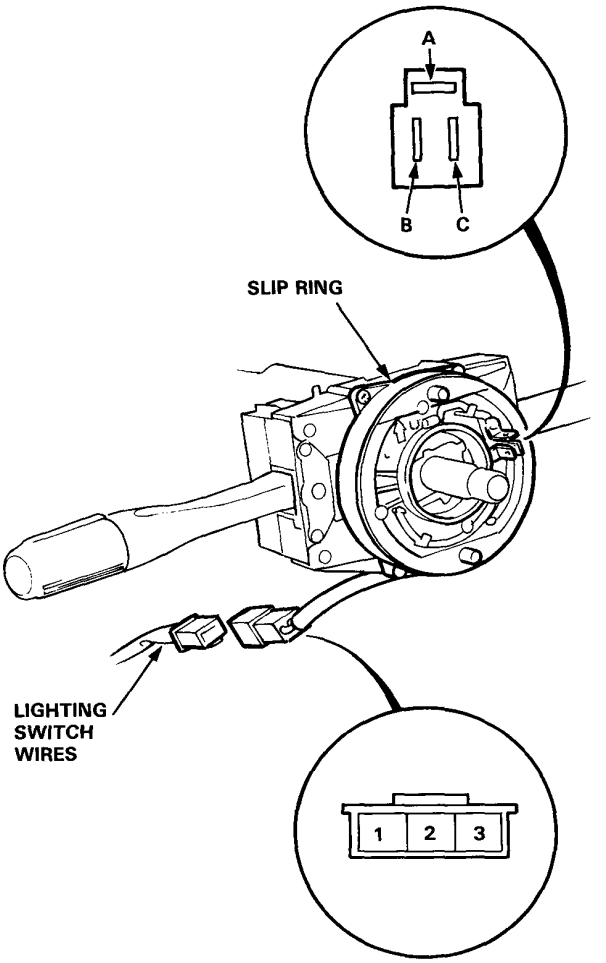

View from wire side

Brake Light Switch Test

1. Disconnect the 4-P connector from the switch.
2. Check for continuity between the terminals according to the table.

Terminal / Brake Pedal	A	B	C	D
PUSHED	O——	——O		
RELEASED			O——	——O

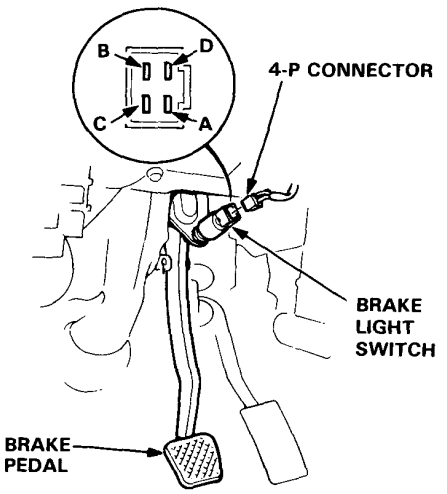

3. If necessary, replace the switch or adjust pedal height (see section 13).

Actuator Solenoid Test

1. Disconnect the 4-P connector from the actuator.
2. Measure resistance between the terminals.

Resistance
VACUUM SOLENOID (between B and D):
30–50Ω
VENT SOLENOID (between C and D):
40–60Ω
SAFETY SOLENOID (between A and D):
40–60Ω

NOTE: Resistance will vary slightly with temperature; specified resistance is at 20°C (70°F).

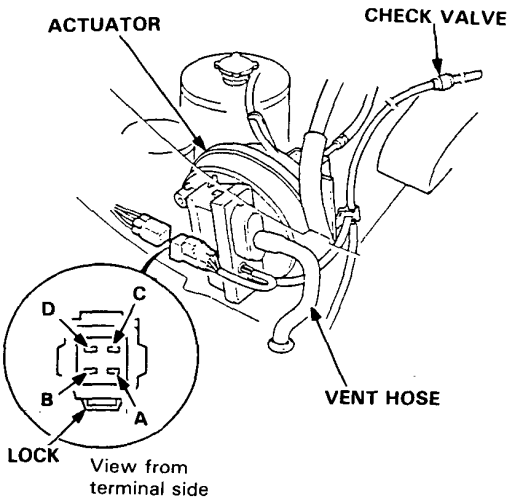

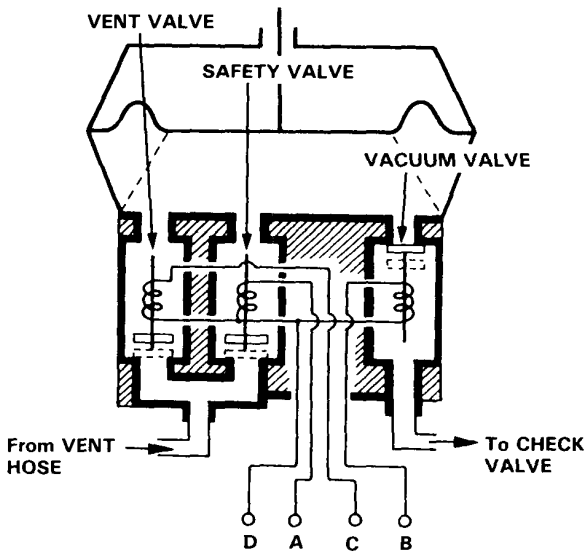

Actuator Test

1. Disconnect the actuator cable from the actuator rod and the 4-P connector.

2. Connect battery positive to the D terminal and negative to the A, B and C terminals.

3. Connect a vacuum pump to the check valve. Then apply vacuum to the actuator.

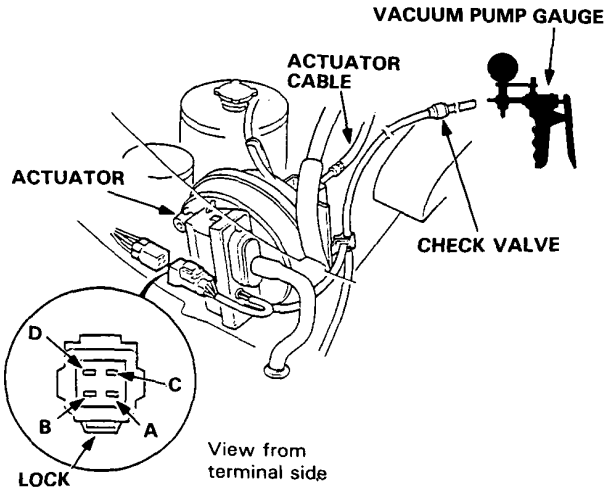

4. The actuator rod should pull in completely. If the rod pulls in only part-way or not at all, check for a leaking vacuum line or defective solenoid.

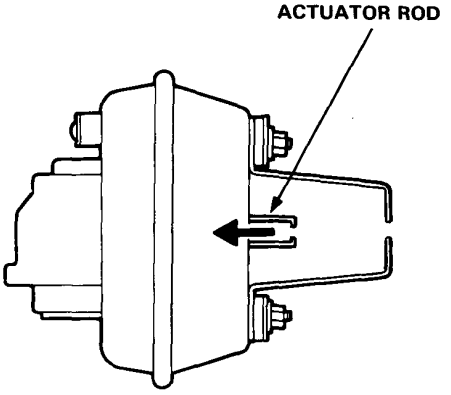

5. With voltage and vacuum still applied, try to pull the actuator rod out by hand. You should not be able to pull it. If you can, it is defective.

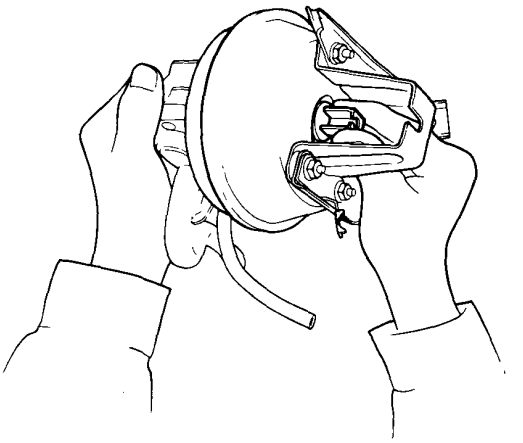

6. Disconnect battery negative from the C terminal. The actuator rod should return. If the actuator rod does not return, and the vent hose and filter are free, the solenoid valve assembly is defective.

7. Repeat steps 2-6, but this time disconnect battery negative from the A terminal. The actuator rod should return. If it does not return, and the vent hose and filter are free, the solenoid valve assembly is defective.

8. If the solenoid valve assembly is replaced, be sure to use new O-rings at each solenoid.

Actuator/Cable Replacement

1. Pull back the boot and loosen the locknut, then disconnect the cable from the bracket.
2. Disconnect the cable end from the actuator rod.

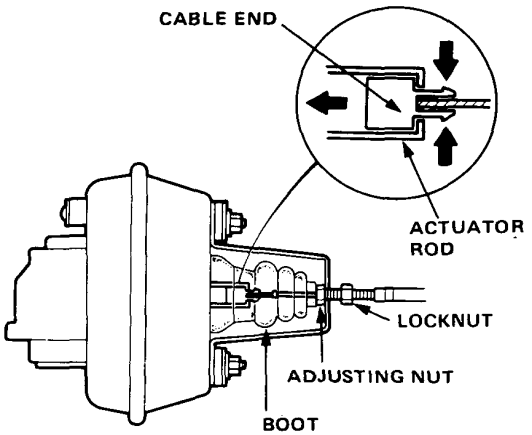

3. Disconnect the 4-P connector from the actuator.
4. Pull the vent hose from the grommet.
5. Disconnect the vacuum hose from the check valve.
6. Remove the 2 mount bolts and the actuator with the bracket and reservoir.

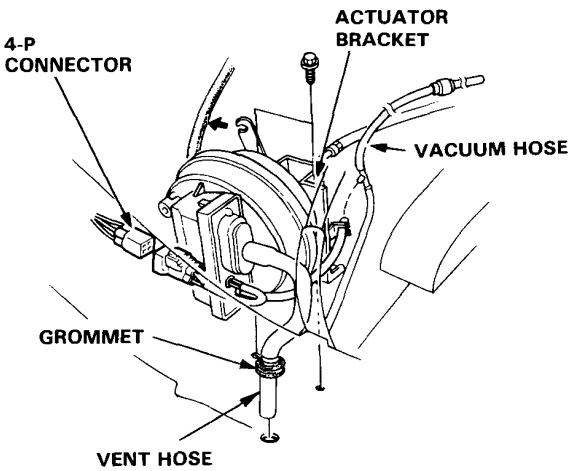

7. If necessary, disconnect the cable end from the linkage over the accelerator pedal, then turn the grommet 90° in the firewall and remove the cable.
8. Install in the reverse order of removal, and adjust free-play at actuator rod after connecting the cable (see next column).

Actuator Cable Adjustment

1. Check that the actuator cable operates smoothly with no binding or sticking.
2. Start the engine.
3. Measure the amount of movement of the actuator rod until the cable pulls on the accelerator lever (engine speed starts to increase). Free play should be 11 ± 1.5 mm (0.43 ± 0.06 in).

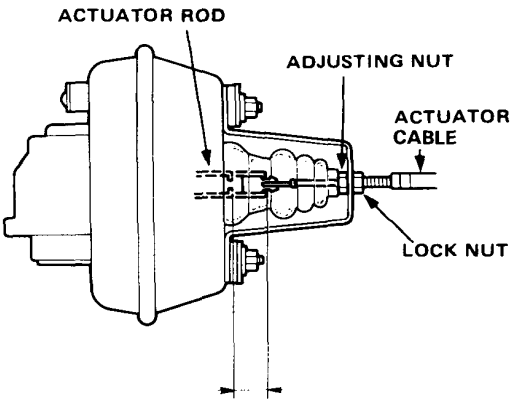

LOCKNUT FREE PLAY: 11 ± 1.5 mm (0.43 ± 0.06 in)

4. If free play is not within specs, loosen the locknut and turn the adjusting nut as required.

   NOTE: If necessary, check the throttle cable free play (see section 6), then recheck the actuator rod free play.

5. Retighten the locknut and recheck the free play.

Actuator Disassembly

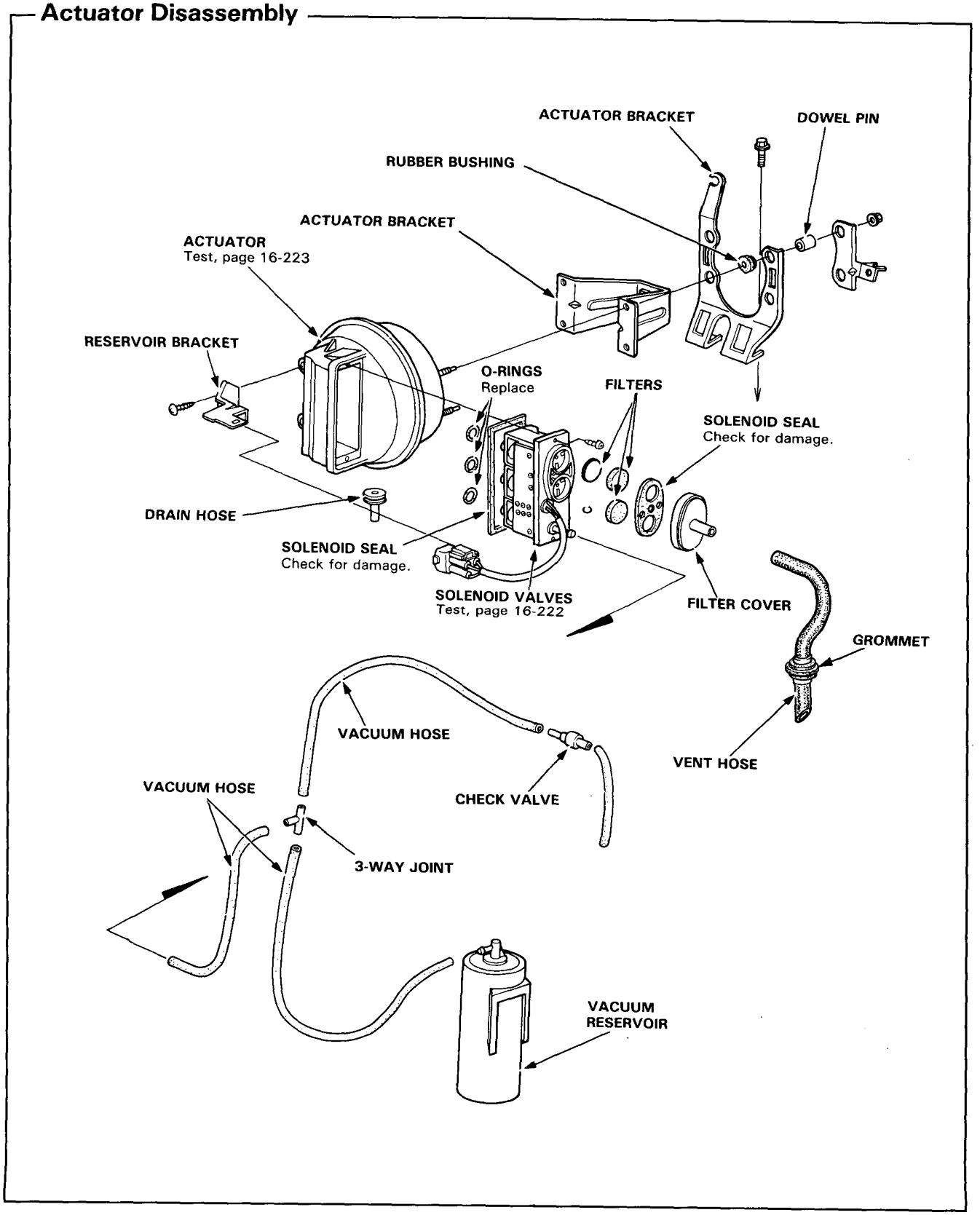

Chassis and Engine Numbers

Vehicle Identification Number

JHM KA3 1 5 0 0 C 000001

Manufacturer Make and Type of Vehicle
JHM: HONDA MOTOR CO., LTD., JAPAN
HONDA Passenger Car.

Line/Body and Engine type
KA3: LEGEND COUPE
C27A

Body and Transmission Type
1: 2 door/5-speed Manual
2: 2 door/4-speed Automatic

Vehicle grade
5: With ALB

Fixed Code

Model Year
0: 1988

Plant
C: Saitama Factory Sayama Plant

Serial Number

Engine Serial Number

C27A1 – 1300001

Engine Type
C27A1: 2.7 ℓ with catalytic converter (KS)
C27A2: 2.7 ℓ without catalytic converter(KW)

Model Year
1: 1988

Transmission Type
3: Manual
4: Automatic

Serial Number

Transmission Number

(Manual Transmission)

G3E4 – 1000001

Transmission Type

Serial Number

Transmission Number

(Automatic Transmission)

L5 – 2000001

Transmission Type

Serial Number

Identification Number Locations

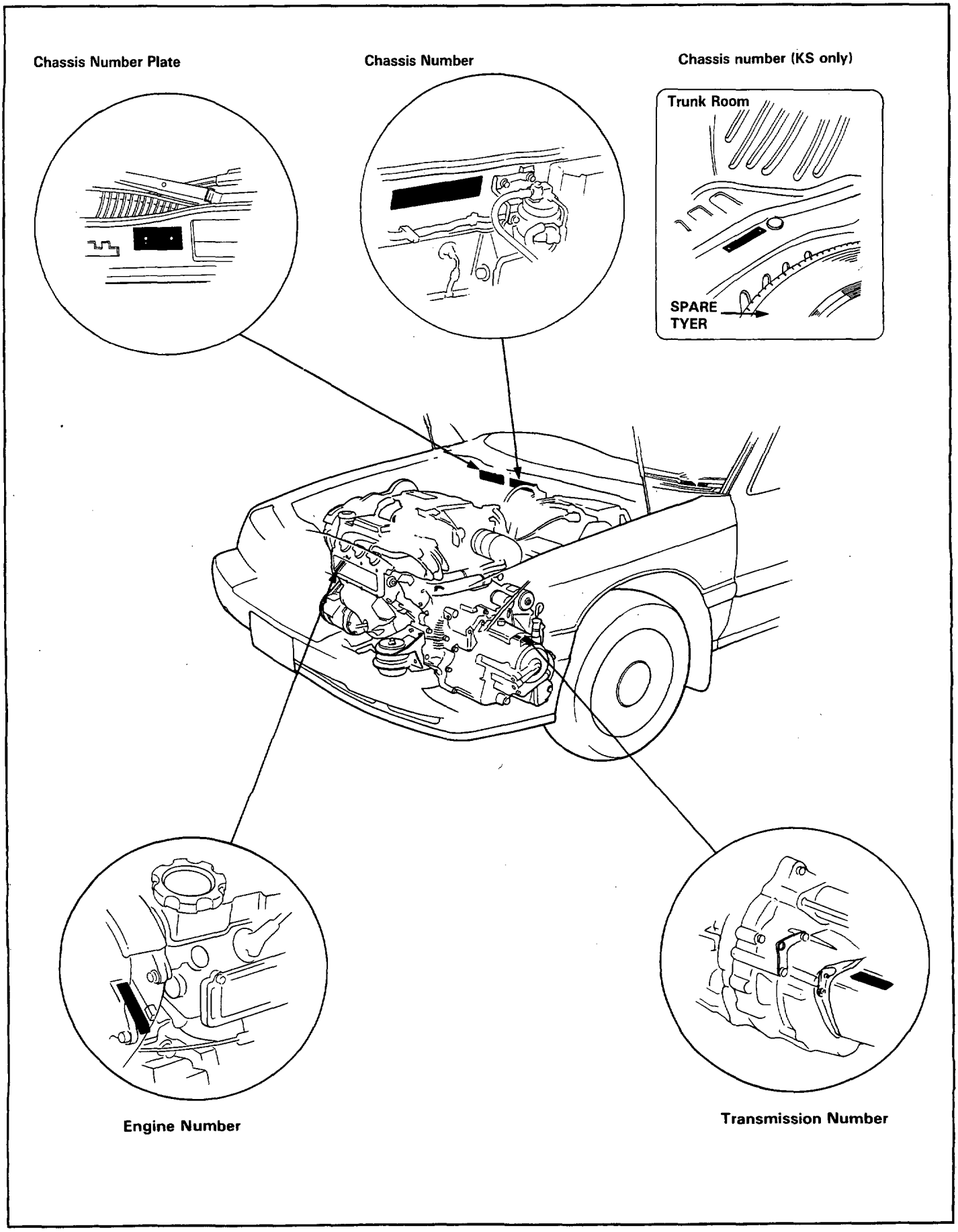

Label Locations

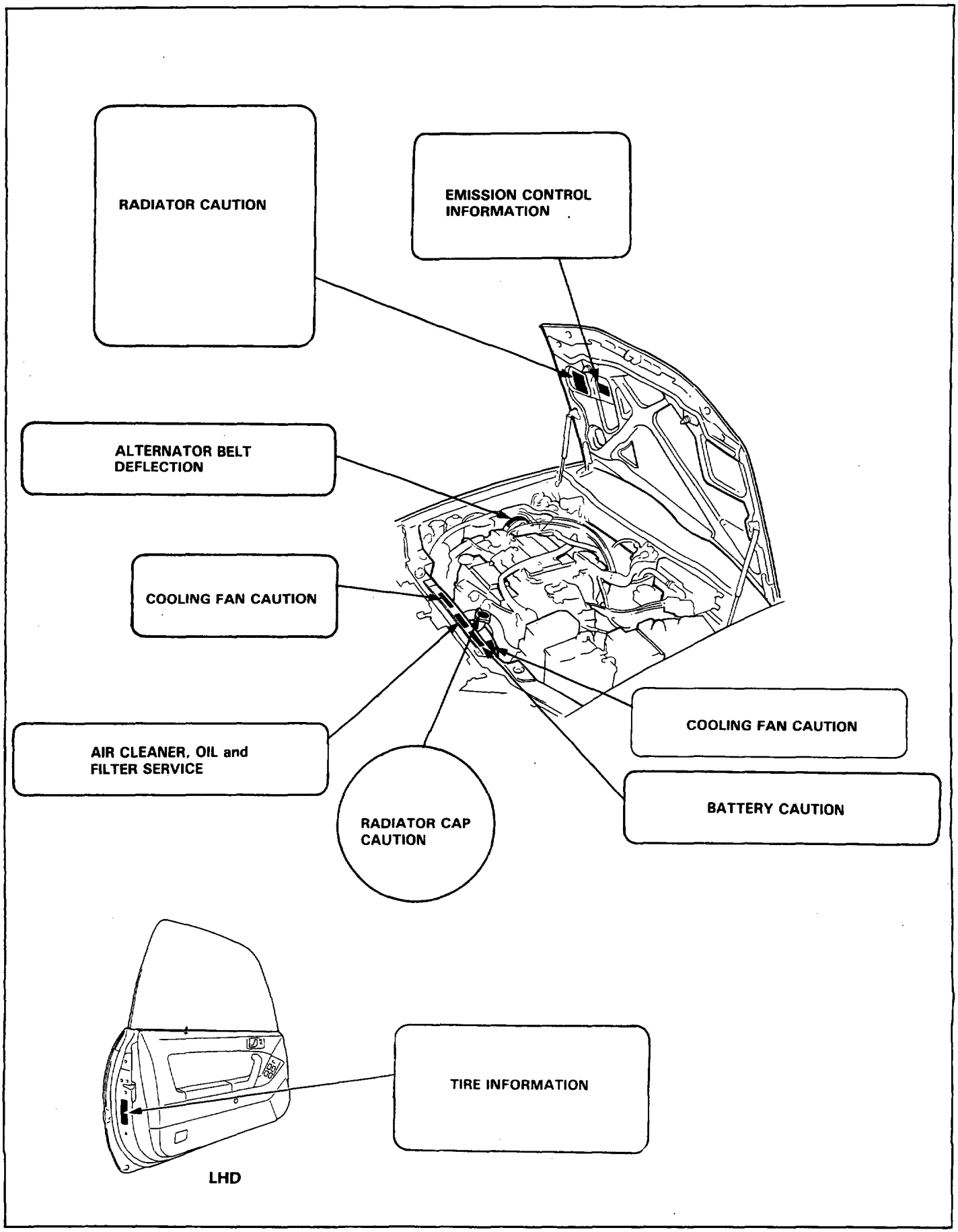

Lift and Support Points

Hoist

1. Place the lift blocks as shown.
2. Raise the hoist a few inches and rock the car to be sure it is firmly supported.
3. Raise the hoist to full height and inspect lift points for solid support.

WARNING **When heavy rear components such as suspension, fuel tank, spare tire and trunk lid/hatch are to be removed, place additional weight in the trunk before hoisting. When substantial weight is removed from the rear of the car, the center of gravity may change and can cause the car to tip forward on the hoist.**

NOTE: Since each tire/wheel assembly weighs approximately 14 kg (30 lbs), placing the front wheels in the trunk can assist with the weight transfer.

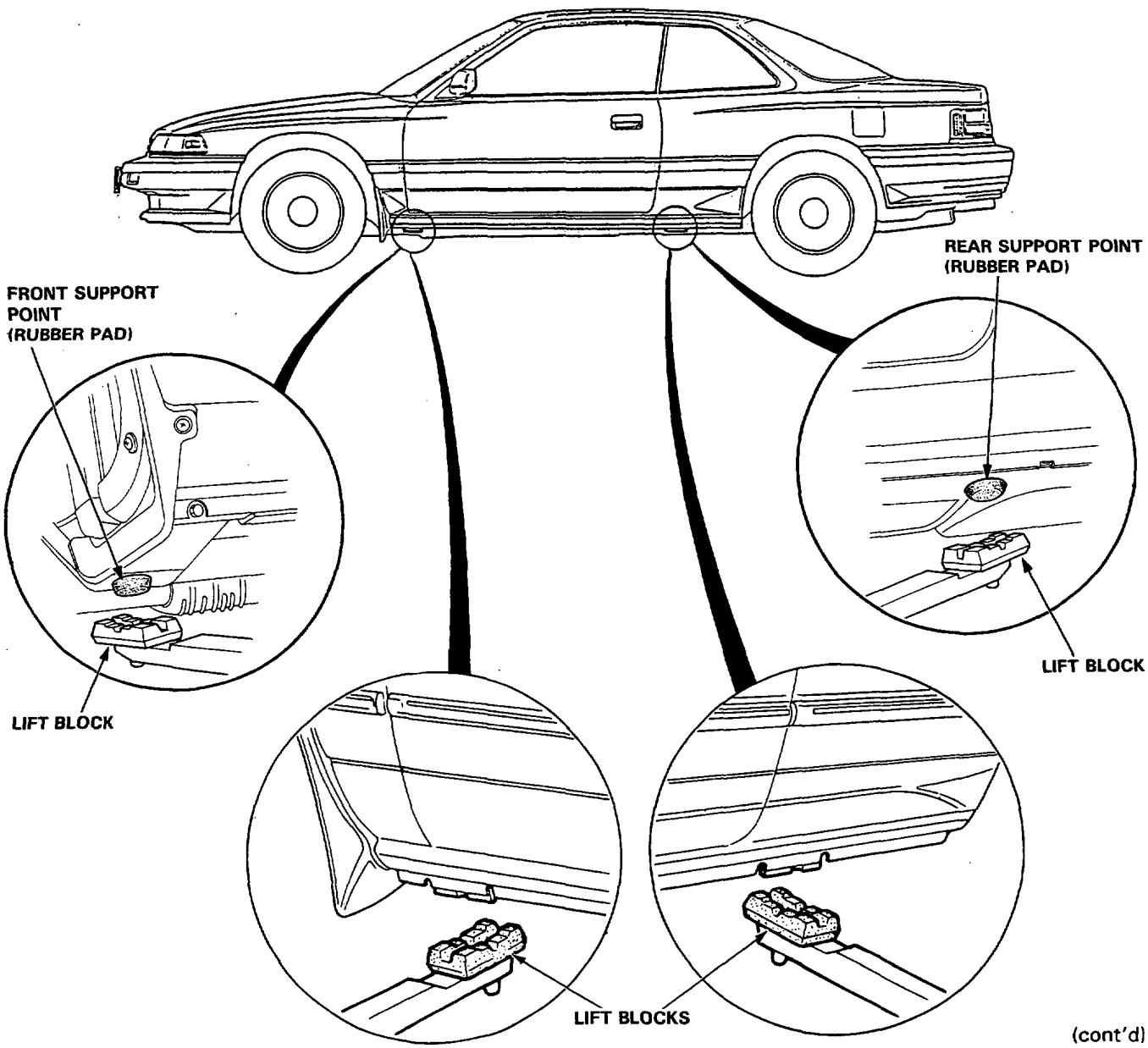

(cont'd)

Lift and Support Points (cont'd)

Floor Jack

1. Set the parking brake and block the wheels that are not being lifted.
2. When lifting the rear of the car, put the gearshift lever in reverse (Automatic in PARK).
3. Raise the car high enough to insert the safety stands.
4. Adjust and place the safety stands as shown on page 1-7 so the car will be approximately level, then lower the car onto them.

WARNING

- **Always use safety stands when working on or under any vehicle that is supported by only a jack.**
- **Never attempt to use a bumper jack for lifting or supporting the car.**

Front

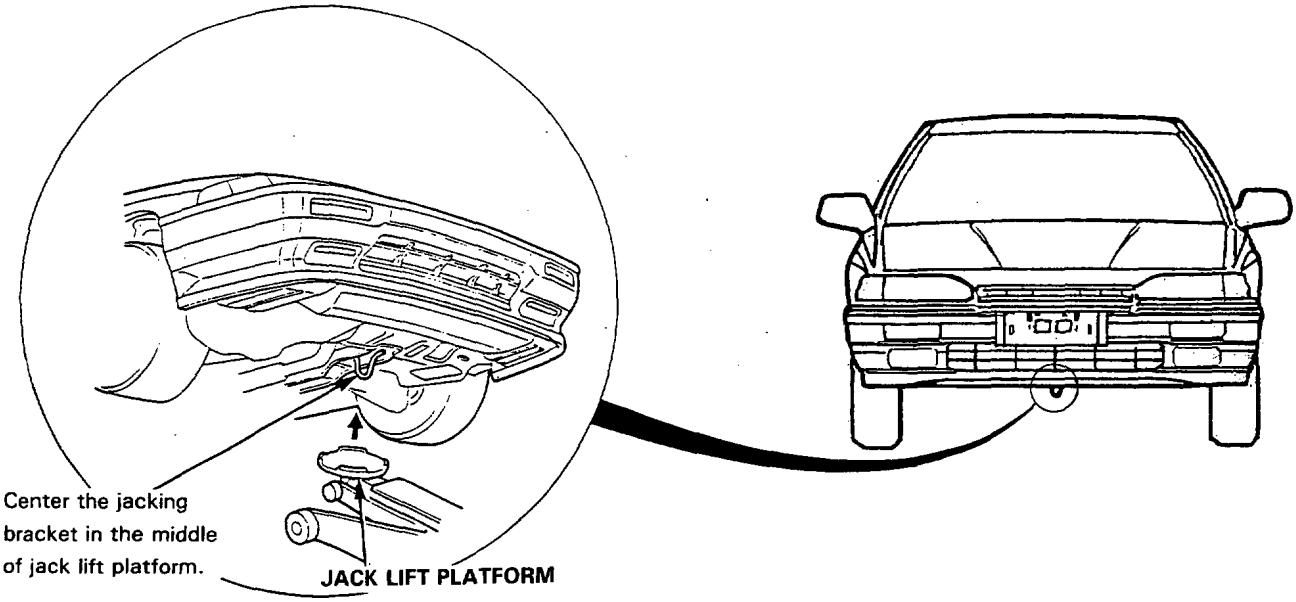

Rear

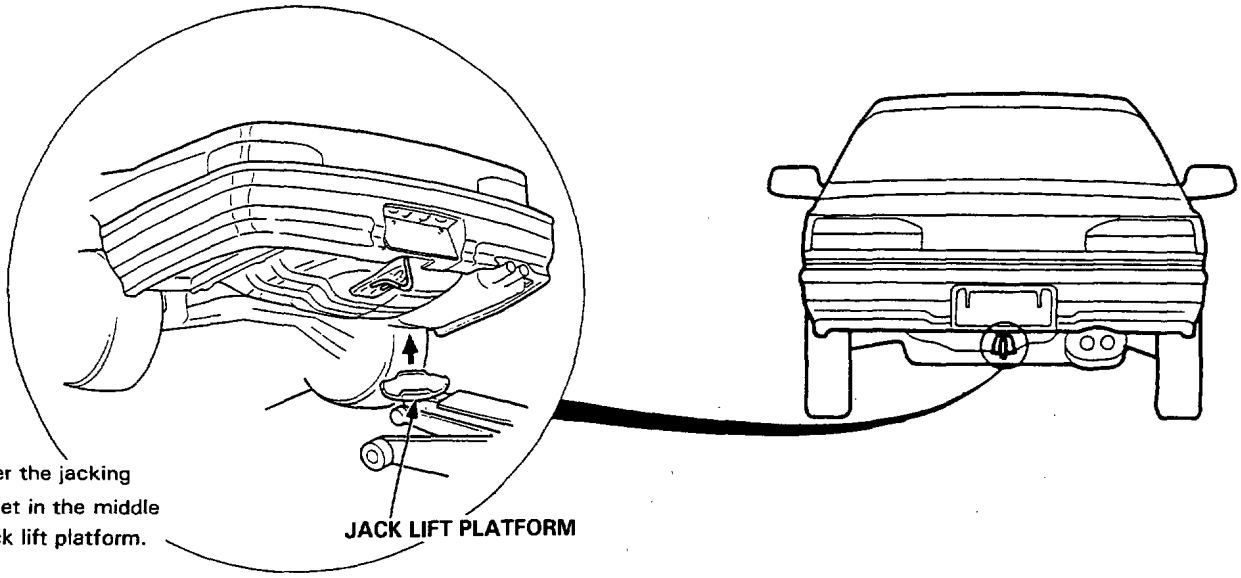

Safety Stands

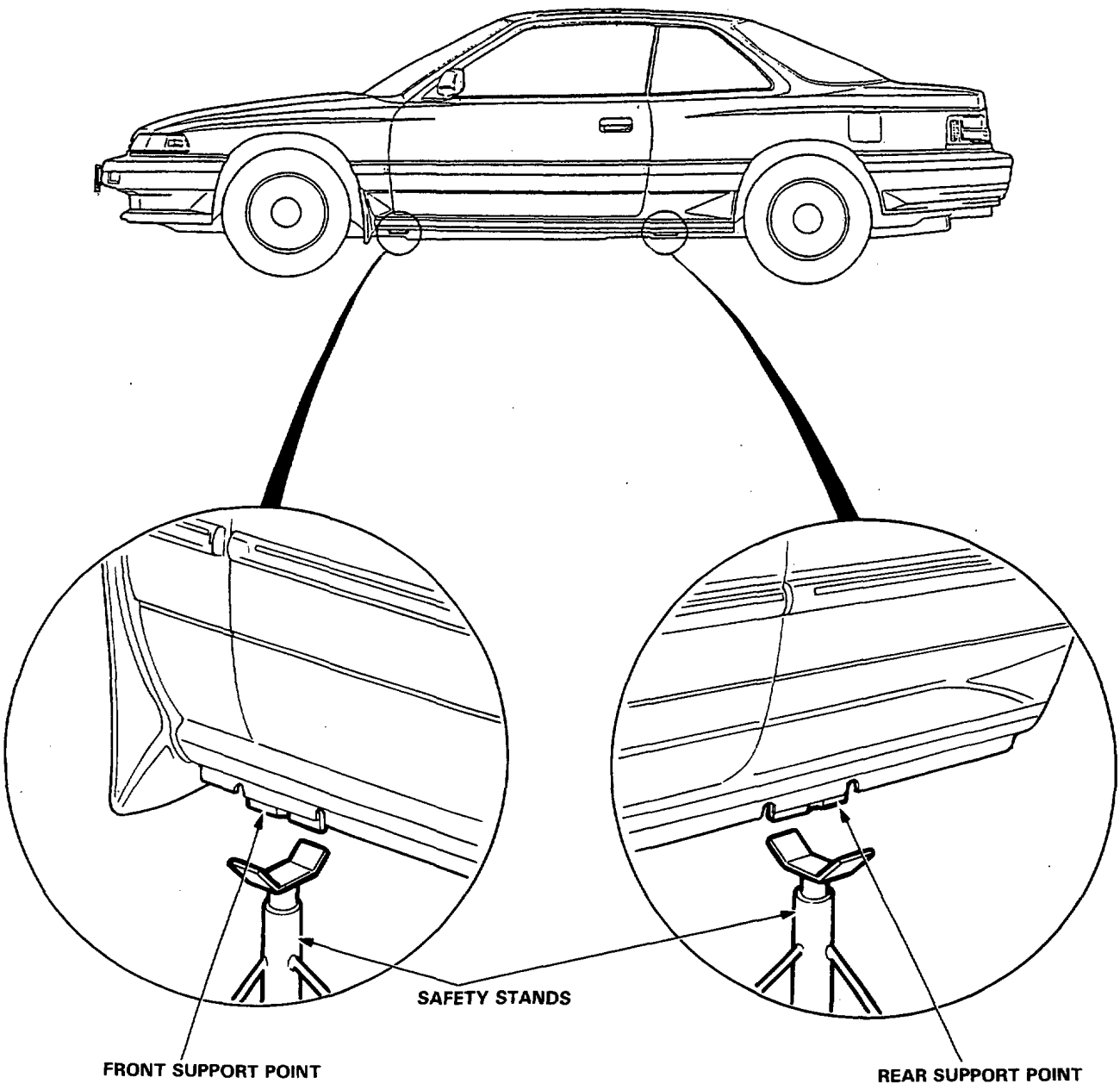

Towing

If possible, always tow the car with the front wheels off the ground. The tow truck driver should position wood spacer blocks between your car's frame and his chains and lift straps to avoid damaging the bumper and the body under it.
Do not use the bumpers to lift the car or to support the car's weight while towing. Check local regulations for towing with a rope or tow bar. A rope may be attached to the hook as shown in the illustration.
Do not attach a tow bar to either bumper.

If the car is to be towed with the front wheels on the ground, observe the following precautions:

1. Wheels and axles must not be touching the body or frame.

2. Turn the ignition key to the "I" position and make sure the steering wheel turns freely.

3. Select NEUTRAL in the gearbox.

4. Release the handbrake.

5. DO NOT exceed 55 km/h (35 mph) or tow for distances of more than 80 km (50 miles).

WARNING DO NOT push or tow a car to start it. The forward surge when the engine starts could cause a collision. Also, under some conditions, the catalytic converter (on some types) could be damaged. A car equipped with automatic transmission gearbox cannot be started by pushing or towing.

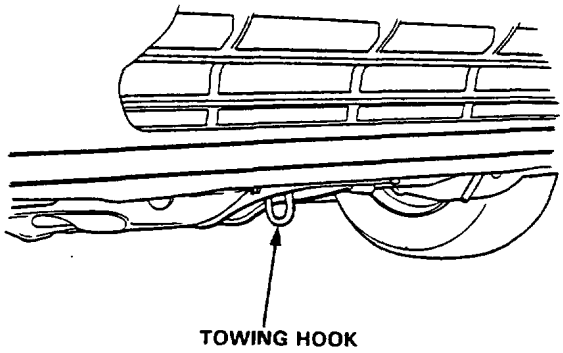

Special Caution Items For This Car

1. The engine hood opens almost vertical during installation or removal of the engine or transmission for easy operation.
   - Remove the wiper blade.
   - Fix the engine hood in the vertical position by removing the open stay mounting bolt on the hood side and fitting it to the mounting hole nearer to the hinge.

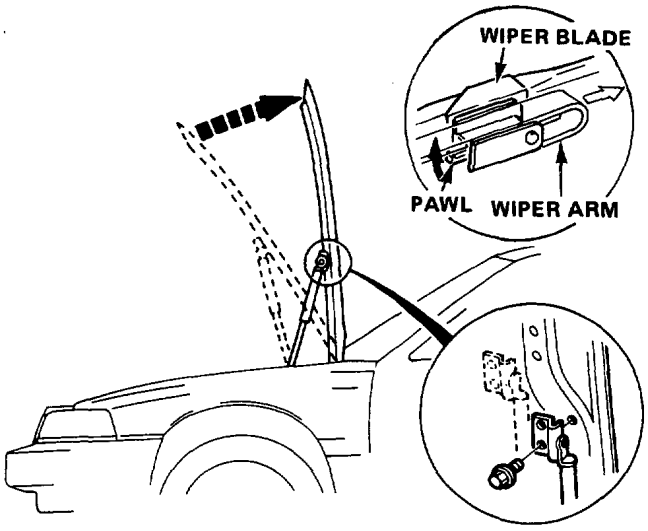

2. ALB piping system servicing
   - Disassemble the ALB piping system after relieve the high-pressured brake fluid.
   - Otherwise, the high-pressured brake fluid will burst out and it is very dangerous.
   - See section 13 how to relieve the high-pressured brake fluid.

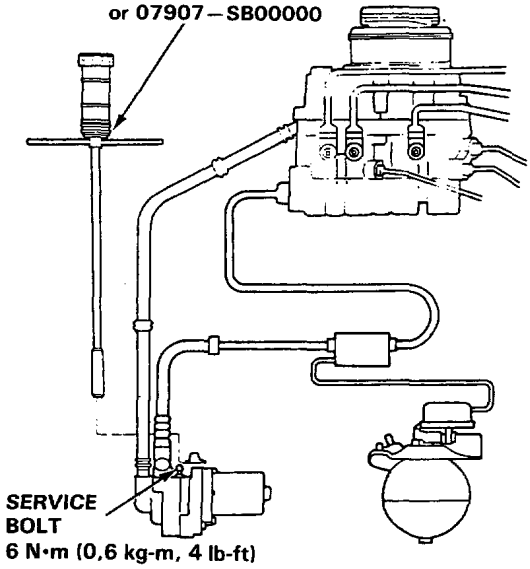

3. Fuel Line Servicing
   - Relieve fuel pressure by loosening the service bolt provided on the top of the fuel filter before disconnecting a fuel hose or a fuel pipe.

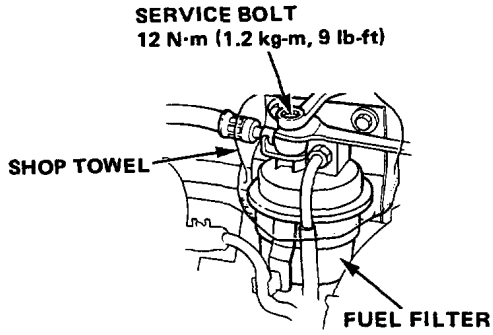

   - *Be sure to replace washers, O-rings, and rubber* seal with new ones when servicing fuel line parts.
   - Always apply oil to the surfaces of O-rings and seal rings before installation. Never use brake fluid, radiator fluid, vegetable oils or alcohol-based oils.

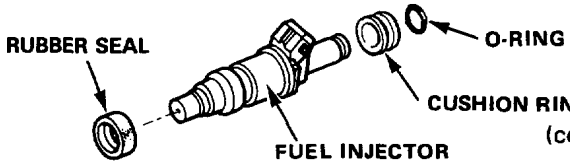

(cont'd)

Special Caution Items For This Car (cont'd)

- When assembling the flare joint of the high-pressure fuel line, clean the joint and coat with new engine oil.
- When installing an injector, check the angle of the coupler. The center line of the coupler should align with the setting mark on the injector holder.

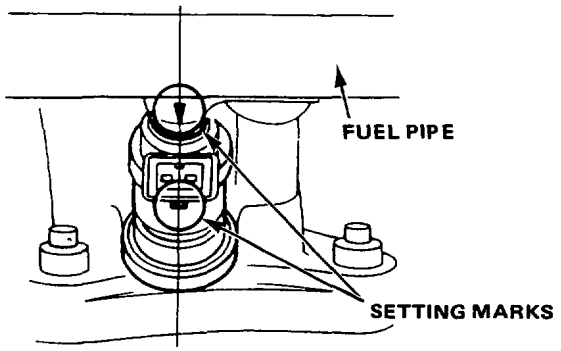

4. Inspection for fuel leakage
   - After assembling fuel line parts, turn ON the ignition switch (do not operate the starter) so that the fuel pump is operated for approximately two seconds and the fuel is pressurized. Repeat this operation two or three times and check whether any fuel leakage has occurred in any of the various points in the fuel line.

5. Installation of an amateur radio for cars equipped with PGM-FI A/T, Cruise control and ALB.
   Care has been taken for the PGM-FI A/T, Cruise control and ALB control units (computer) and its wiring to prevent erroneous operation from external interference, but erroneous operation of the computer may be caused by entry of extremely strong radio waves. Attention must be paid to the following items to prevent erroneous operation of the computer.
   - The antenna and the body of the radio must be at least 200 mm (7.9 in.) away from the computer (See Section 16, Relays and Control Units Location).
   - Do not lead the antenna feeder and the coaxial cable over a long distance parallel to the wiring, and when crossing with the wiring is required, execute crossing at a right angle.
   - Do not install a radio with a large output (max. 10 W).

6. Apply liquid gasket to the transmission, oil pump cover, right side cover and water outlet. Use HONDA PARTS NO. 08740—99986 as a liquid gasket.
   - Check that the mating surfaces are clean and dry before applying liquid gasket. Degrease the mating surfaces if necessary.
   - Apply liquid gasket evenly, being careful to cover all the mating surface.
   - To prevent leakage of oil, apply liquid gasket to the inner threads of the bolt holes.
   - Do not allow liquid gasket to stand for more than 20 minutes before assembly.
   - Fill the case with clean engine oil or coolant 30 minutes after assembly.

7. Since a V-type 6-cylinder engine is used, carefully prevent removed bolts, nuts and washers from falling into the valley between V-type cylinders around the intake manifold during maintenance.
   - Putting shop towel in the gap in the V-bank vallery is recommended to prevent dropping.

8. The oil filter case is removed from the engine block during engine removal and installation. If foreign matter enters the oil path, the lubrication system may clog. Be sure to fit a blind plug to the oil hole.

9. The layout of the engine and transmission is the reverse of that of conventional Honda cars. The engine is mounted on the right side, and the transmission on the left. The direction of engine revolution, therefore, is reversed. It is clockwise as viewed from the timing belt pulley.
   - After timing belt adjustment, always rotate the engine clockwise as viewed from the pulley side.

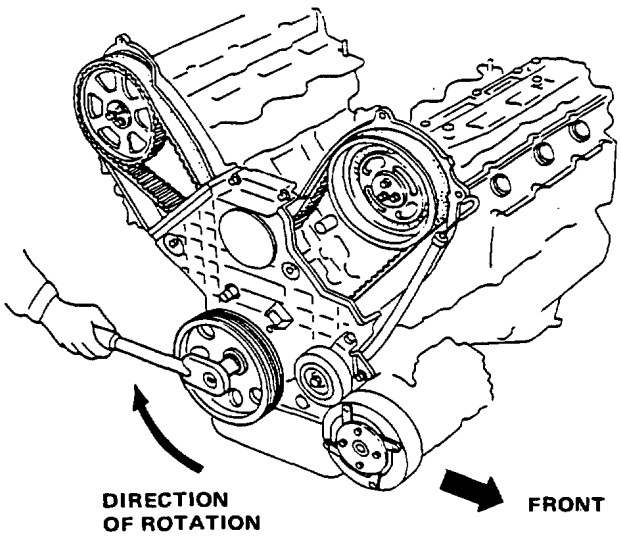

10. Cylinder Nos. are No. 1, No. 2 and No. 3 from the timing belt side of the rear bank cylinders, and No. 4, No. 5 and No. 6 from the timing belt side of the front bank cylinders.

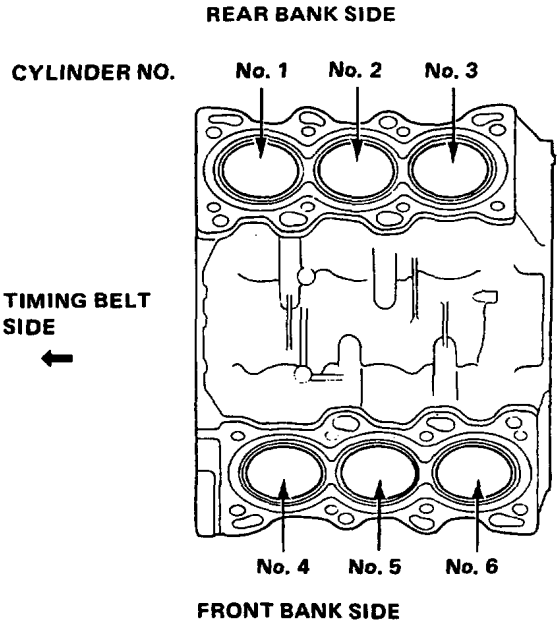

11. The hydraulic tappet has been adopted to eliminate the need for valve clearance adjustment. After disassembling the valve, head and cylinder or after maintenance of the valve train, always carry out the following operations:
    - Bleed the air from the chamber when inspecting the hydraulic tappet (section 5).
    - Clean each oil path in the engine. Use an air nozzle to eliminate any clogging with dirt, etc.
    - Before installing the camshaft bearing caps, fill the oil path in the hydraulic tappet with engine oil from the oil filler on the cylinder head (section 5).
    - After installing the camshaft, properly adjust the exhaust rocker arm adjusting screw (section 5).

CAUTION: Observe all safety precautions and notes while working.

1. Protect all painted surfaces and seats against dirt and scratches with a clean cloth or vinyl cover.

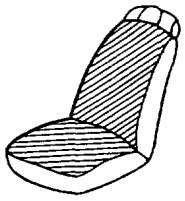

2. Work safely and give your work your undivided attention. When either the front or rear wheels are to be raised, block the remaining wheels securely. Communicate at frequently as possible when a work involves two or more workers. Do not run the engine unless the shop or working area is well ventilated.

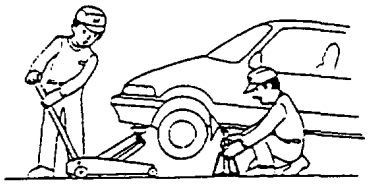

3. Prior to removing or disassembling parts, they must be inspected carefully to isolate the cause for which service is necessary. Observe all safety notes and precautions and follow the proper procedures as described in this manual.

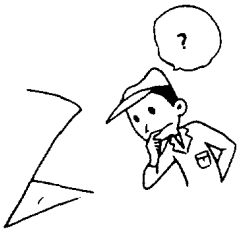

Mark or place all removed parts in order in a parts rack so they can be reassembled in their original places.

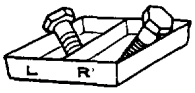

(cont'd)

(cont'd)

4. Use the special tool when use of such a tool is specified.

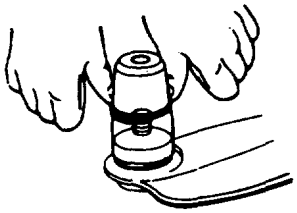

5. Parts must be assembled with the proper torque according to the maintenance standards established.

6. When tightening a series bolts or nuts, begin with the center or large diameter bolts and tighten them in crisscross pattern in two or more steps.

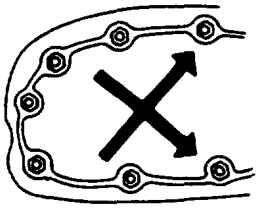

7. Use new packings, gaskets, O-rings and cotter pins whenever reassembling.

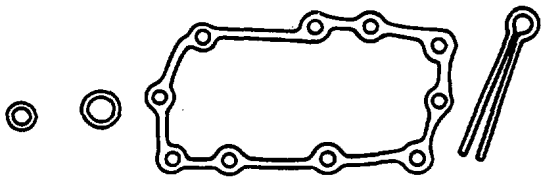

8. Use genuine HONDA parts and lubricants or those equivalent. When parts are to be reused, they must be inspected carefully to make sure they are not damaged or deteriorated and are in good usable condition.

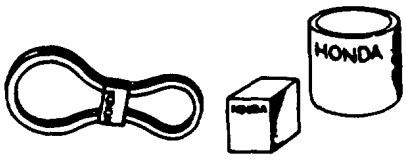

9. Coat or fill parts with specified grease as specified (page 4-2). Clean all removed parts in or with solvent upon disassembly.

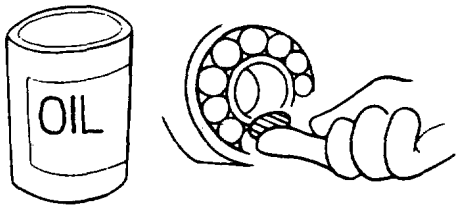

10. Brake fluid and hydraulic components
    - When replenishing the system, use extreme care prevent dust and dirt from entering the system.
    - Do not mix different brands of fluid as they may not be compatible.
    - Do not reuse drained brake fluid.
    - Brake fluid can cause damage to painted surfaces. Wipe up spilled fluid at once.
    - After disconnecting brake hoses or pipes, be sure plug the openings to prevent loss of brake fluid.
    - Clean all disassembled parts only in clean BRAKE FLUID. Blow open all holes and passages with compressed air.

    - Keep disassembled parts from air-borne dust and abrasives.
    - Check that parts are clean before assembly.

11. Avoid oil or grease getting on rubber parts and tubes, unless specified.

12. Upon assembling, check every possible part for proper installation and movement or operation.

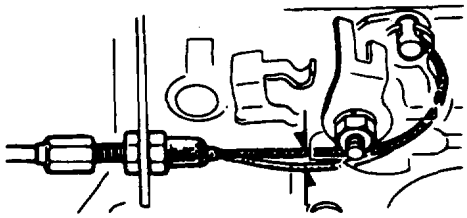

- Before making any repairs on electric wires or parts, disconnect the battery cables from the battery staring with the negative (−) terminal.

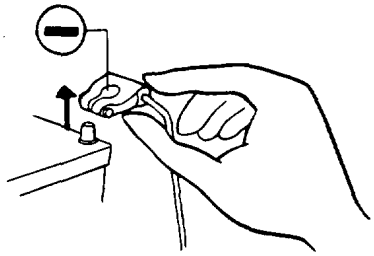

- After making repairs, check each wire or part for proper routing and installation. Also check to see that they are connected properly.
- Always connect the battery positive (+) cable first, then connect the negative (−) cable.

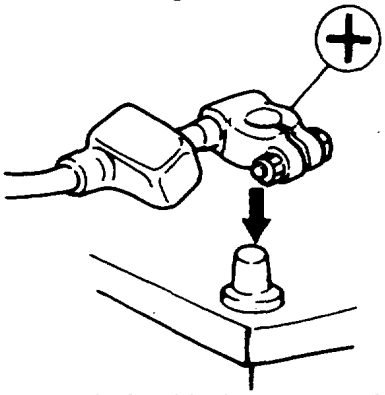

- Coat the terminals with clean grease after connecting the battery cables.
- Don't forget to install the terminal cover over the positive battery terminal after connecting.
- Before installing a new fuse, isolate the cause and take corrective measures, particularly when frequent fuse failure occurs.

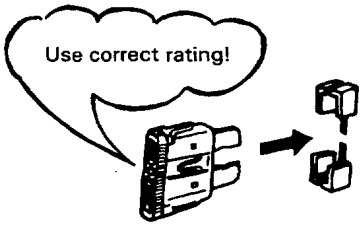

- Be sure to install the terminal cover over the connections after a wire or wire harness has been connected.

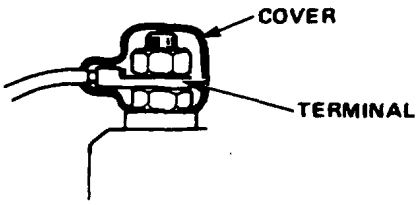

- When removing locking couplers, be sure to disengage the lock before disconnecting.
- Couplers may be of two types, those in which the lock is pressed to remove, and those in which the lock is pulled up to remove. Be sure to ascertain the type of locking device before beginning work. The following is a depiction of the means of disconnecting various typical couplers.

Press to disengage:

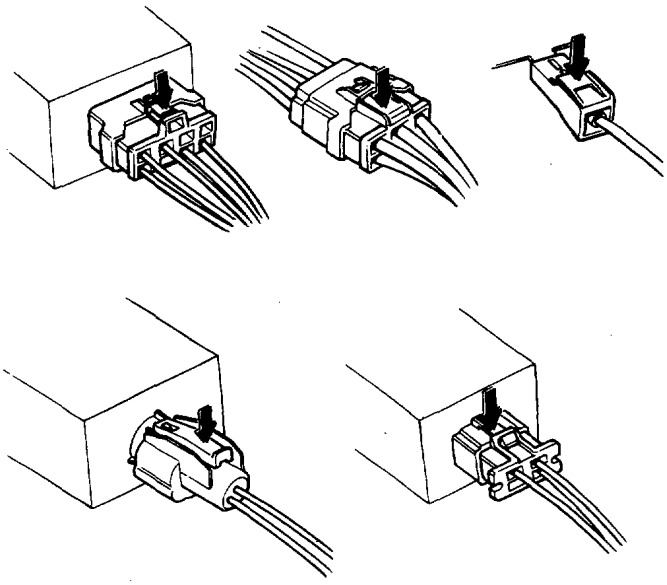

Pull up to disengage:

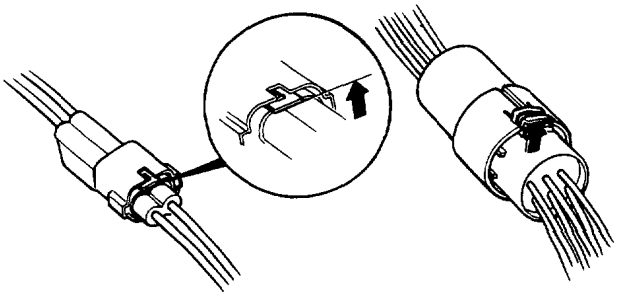

- When disconnecting locks, first press in the coupler tightly (to provide clearance to the locking device), then operated the tab fully and remove the coupler in the designated manner.

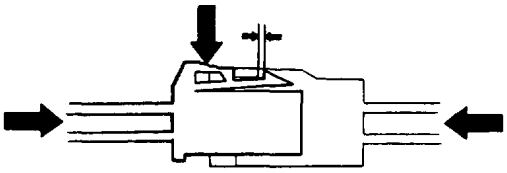

(cont'd)

Electrical (cont'd)

- When disconnecting a coupler, pull it off from the mating coupler by holding on both couplers.
- Never try to disconnect couplers by pulling on their wires.

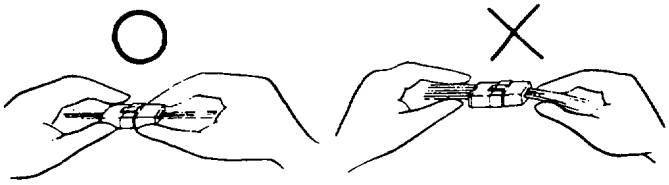

- Before connecting couplers, check to see that the terminals are in place and are not bent or distorted.

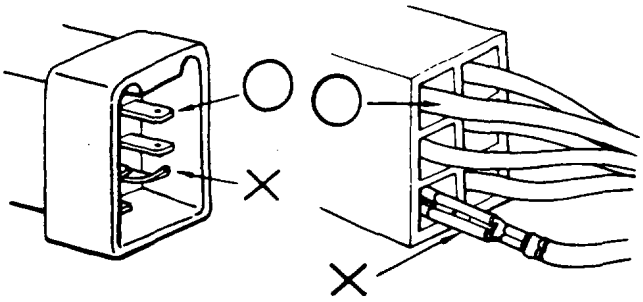

- Insert couplers fully until they will no longer go.
- Some couplers have locking tabs that must be aligned and engaged securely.
- Don't use wire harnesses with a loose wire or coupler.

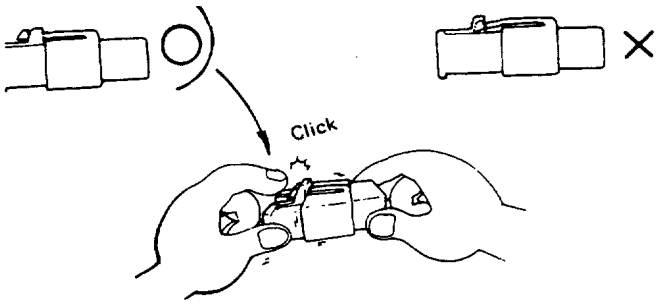

- Place the plastic cover over the mating coupler after reconnecting. Also check that the cover is not distorted.

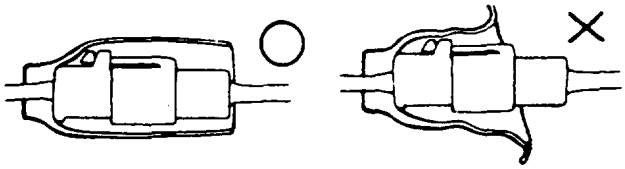

- Before connecting, check each connector cover for damage. Also make sure that the female connector is tight and not loosened from the previous use.

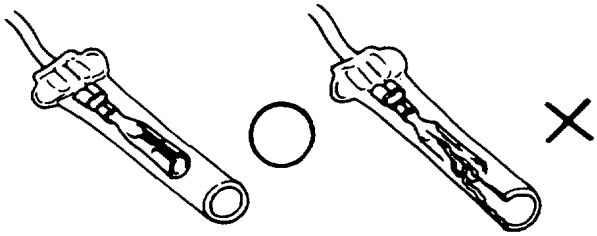

- Insert male connectors into the female connectors fully until they will no longer go.
- Be sure that plastic cover is placed over the connection.
- Position the wires so that the open end of the cover is not facing upward.

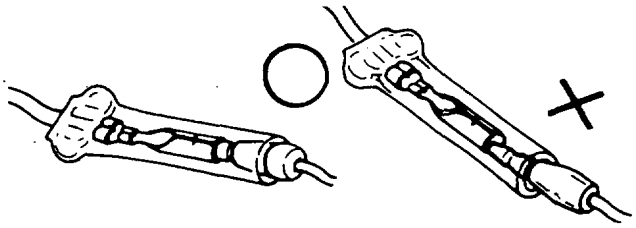

- Secure wires and wire harnesses to the frame with their respective wire bands at the designated locations. Position the wiring in the bands so that only the insulated surfaces contact the wires or wire harnesses.

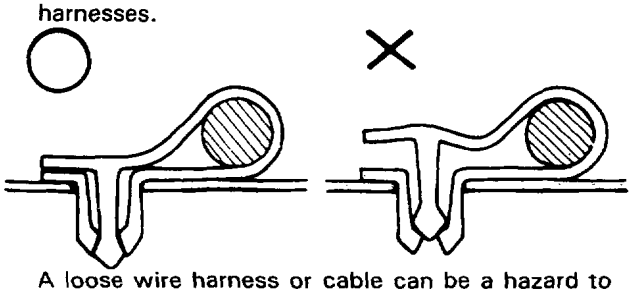

- A loose wire harness or cable can be a hazard to safety. After clamping, check each wire for security in its clamp.

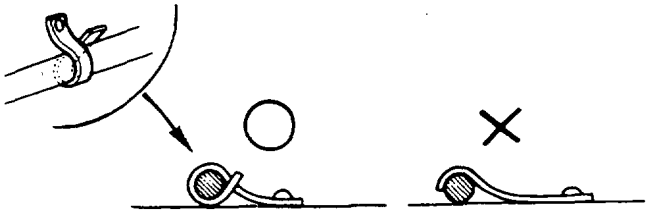

- Do not squeeze wires against the weld when a weld-on clamp is used.

- After clamping, check each harness to be certain that it is not interferring with any moving or sliding parts of the vehicle.
- Keep wire harnesses away from the exhaust pipes and other hot parts.

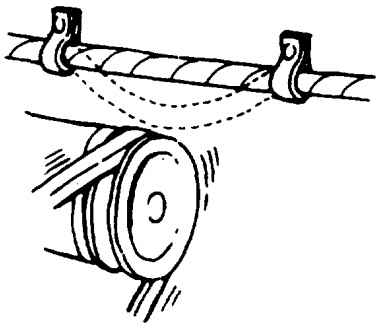

- Always keep a safe distance between wire harnesses and any heated parts.

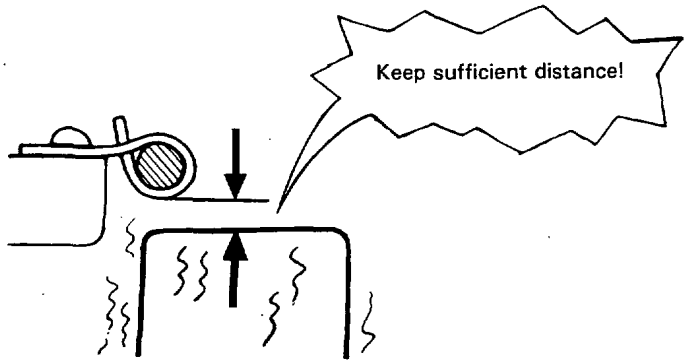

- Do not bring wire harnesses in direct contact with sharp edges or corners.
- Also avoid contact with the projected ends of bolts, screws and other fasteners.

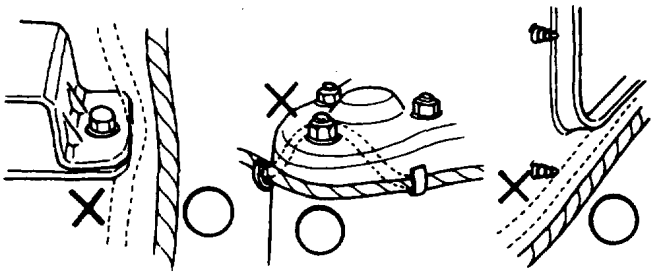

- Route harnesses so they are not pulled taut or excessively slackened.

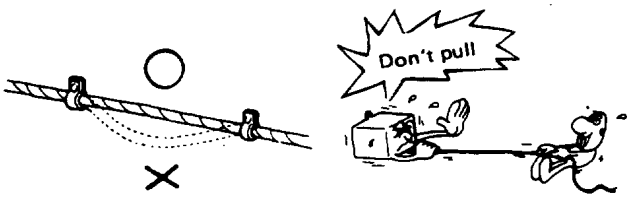

- Protect wires and harnesses with tape or a tube if they are in contact with a sharp edge or corner.

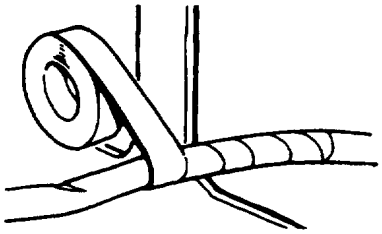

- Clean the attaching surface thoroughly if an adhesive is used. First, wipe with solvent or alcohol if necessary.

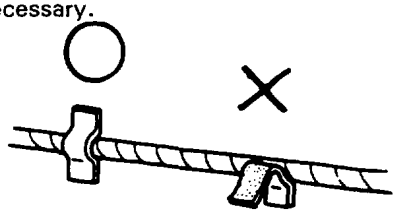

- Seat grommets in their grooves properly.

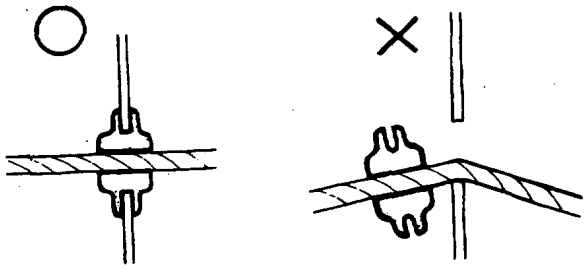

- Do not damage the insulation when connecting a wire.
- Do not use wires or harnesses with a broken insulation. Repair by wrapping with protective tape or replace with new ones if necessary.

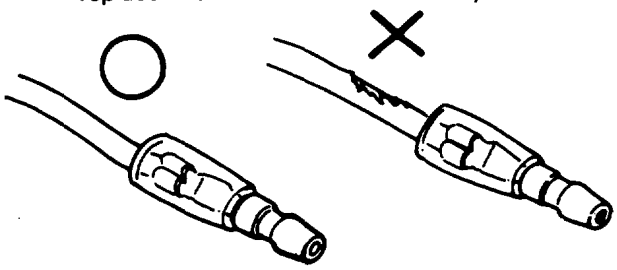

- After installing parts, make sure that wire harnesses are not pinched.

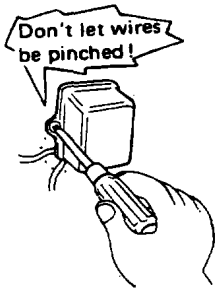

(cont'd)

Electrical (cont'd)

- After routing, check that the wire harnesses are not twisted or kinked.

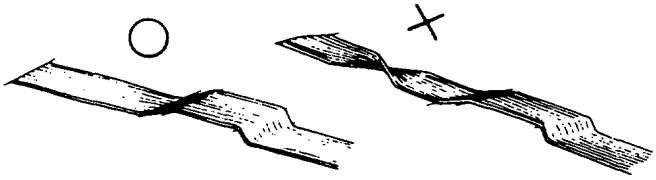

- Wire harnesses should be routed so that they are not pulled taut, slackened excessively, pinched, or interfering with adjacent or surrounding parts in all steering positions.

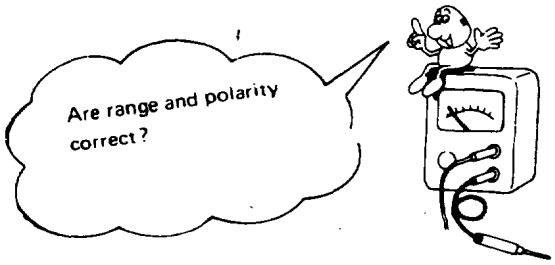

- When using the Service Tester, follow the manufacturer's instructions and those described in the Shop Manual.

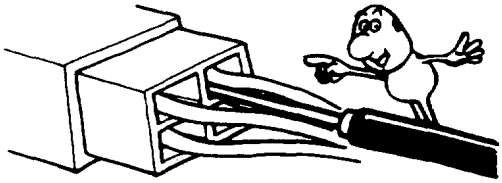

- Do drop parts.

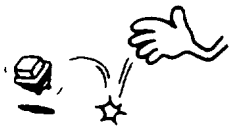

- Rust is the enemy of all finished surfaces. Before connecting connectors and couplers, check the terminals and remove, if any, rust using a fine sand paper or emery cloth.

Symbol Marks

The following symbols stand for:

:Apply engine oil.

:Apply brake fluid.

:Apply grease.

:Apply Automatic Transmission Fluid.

:Apply Power Steering Fluid.

①, ②, ③,----- ❶, ❷, ❸,----- : Sequence of removal.

Electrical (cont'd)

- After routing, check that the wire harnesses are not twisted or kinked.

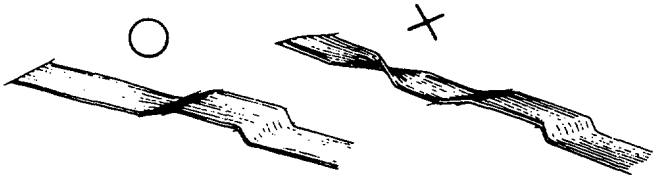

- Wire harnesses should be routed so that they are not pulled taut, slackened excessively, pinched, or interfering with adjacent or surrounding parts in all steering positions.

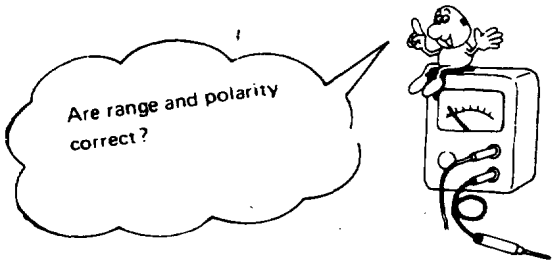

- When using the Service Tester, follow the manufacturer's instructions and those described in the Shop Manual.

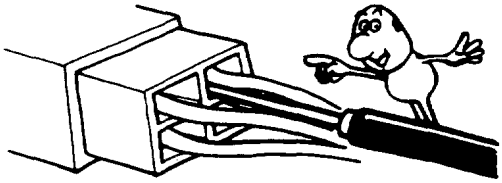

- Do drop parts.

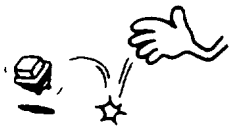

- Rust is the enemy of all finished surfaces. Before connecting connectors and couplers, check the terminals and remove, if any, rust using a fine sand paper or emery cloth.

Symbol Marks

The following symbols stand for:

:Apply engine oil.

:Apply brake fluid.

:Apply grease.

:Apply Automatic Transmission Fluid.

:Apply Power Steering Fluid.

①, ②, ③,----- ❶, ❷, ❸,----- : Sequence of removal.

Abbreviations

A/C	Air Conditioner
A/T	Automatic Transmission
ATF	DEXRON®II Automatic Transmission Fluid
BAT	Battery
CATA	Catalytic Converter
EACV	Electronic Air Control Valve
ECU	PGM-FI Electronic Control Unit
EGR	Exhaust Gas Recirculation
EACV	Electronic Air Control Valve
EX	Exhaust
GND	Ground
IG	Ignition
IN	Intake
INT	Intermittent
L.	Left Side
LHD	Left Hand Drive
M/T	Manual Transmission
PCV VALVE	Positive Crankcase Ventilation Valve
PGM-FI	Programmed Fuel-Injection
P/S	Power Steering
R.	Right Side
RHD	Right Hand Drive
SOL. V	Solenoid Valve
SW	Switch
TA	Intake Air Temperature
TDC	Top Dead Center
TW	Coolant Temperature
P	Parking
R	Reverse
N	Neutral
D	Drive Range
S	Sport Range
2	Fixed at 2nd Range

Special Tools

Existing Tools (Common with other Models)

5. Engine

No.	Tool Number	Description	Q'ty	Remarks
①	07944–6110200	Pin Driver, 8 mm	1	
②	07941–6920003	Ball Joint Remover	1	07941–6920002 may also be used.
③	07966–6340011	Engine Block Hanger	1	
④	07925–6570000	Pulley Holder	1	Camshaft Pulley
⑤	07757–0010000	Valve Spring Compressor	1	07957–3290001 may also be used.
⑥	07942–6110000	Valve Guide Driver/Remover	1	07942–6570100 may also be used.
⑦	07743–0020000	Valve Guide Driver	1	
⑧	07984–6110000	Valve Guide Reamer	1	07934–6570000 may also be used.
⑨	07947–SB00200	Oil Seal Driver	1	Camshaft
⑩	07GAF–PH60300	Piston Pin Base Insert	1	
⑪	07GAF–PH70100	Pilot Collar	1	
⑫	07HAF–PL20101	Piston Base Head	1	
⑬	07973–6570002	Piston Pin Dis/Assembly Tool Set	1	
⑬-1	07973–6570500	Piston Base	(1)	Component Tools
⑬-2	07973–6570600	Piston Base Spring	(1)	
⑭	07924–PD20003	Ring Gear Holder	1	07924–PD20002 may also be used.
⑮	07746–0030100	Driver	1	
⑯	07947–SB00200	Oil Seal Driver	1	Crankshaft Oil Seal
⑰	07749–0010000	Driver	1	07949–6110000 may also be used.
⑱	07406–0030000	Oil Pressure Gauge Adaptor	1	
⑲	07GAD–PH70200	Oil Seal Driver	1	

6. Fuel and Emission

No.	Tool Number	Description	Q'ty	Remarks
①	07GAZ–SE00300	R.P.M. Connecting Adaptor	1	
②	07406–0040001	Fuel Pressure Gauge	1	
②-1	07406–0040100	Pressure Gauge	(1)	Component Tools
②-2	07406–0040201	Hose Assy	(1)	
③	07999–PD6000A	PGM-FI Test Harness	1	
④	07411–0020000	Digital Circit Tester	1	
⑤	07GMJ–ML80100	Test Harness	1	

7. Clutch

No.	Tool Number	Description	Q'ty	Remarks
①	07924–PD20003	Ring Gear Holder	1	07924–PD20002
②	07GAG–PF50100	Clutch Disc Alignment Tool	1	

8. Manual Transmission

No.	Tool Number	Description	Q'ty	Remarks
①	07744–0010400	Pin Driver, 5.0 mm	1	07944–6110100 may also be used.
②	07749–0010000	Driver	1	07949–6110000 may also be used.
③	07746–0010500	Attachment, 62 x 68 mm	1	07947–6340200 may also be used.
④	07936–6340000	Bearing Remover Set	1	
⑤	07936–6890101	Bearing Puller Attachment	1	Use changed to 07936–6340000 attachment.
⑥	07746–0010300	Attachment, 42 x 47 mm	1	
⑦	07GAJ–PG20101	Mainshaft Thrust Clearance Inspection Tool	1 1	
⑧	07979–PJ40000	Mainshaft Stand Base	1	
⑨	07746–0030100	Driver	1	
⑩	07GAD–PG20100	Pin Driver, 5.0 mm	1	
⑪	07GAD–PG40100	Oil Seal Driver	1	
⑫	07GAJ–PG20200	Preload Inspection Tool	1	

9. Automatic Transmission

No.	Tool Number	Description	Q'ty	Remarks
①	07GAB–PF50100	Mainshaft Holder	1	
②	07GAE–PG40000	Clutch Spring Compressor Set	1	
③	07749–0010000	Driver	1	07949–6110000 may also be used.
④	07947–6340500	Driver Attachment, E	1	
⑤	07936–6340000	Bearing/Transmission Case Puller	1	
⑥	07GAC–PG40101 or 07HAC-PK40100	Housing Puller	1	
⑦	07GAE–PG40001	Clutch Spring Compressor Set	1	
⑧	*07HAE–PL50100	Compressor Attachment	1	
⑨	07GAE–PG40200	Compressor Bolt Assembly	1	
⑩	07960–6120100	Compressor Attachment	1	
⑪	*07HAF–PL50100	Gear Installer	1	
⑫	07936–6340000	Bearing Remover Set	1	
⑬	07GAC–PF40210	Bearing Remover Attachment	1	Use changed to 07936–6340000 attachment.
⑭	07746–0010500	Attachment, 62 x 68 mm	1	
⑮	07406–0020003	Oil Pressure Gauge Set	1	
⑮-1	07406–0020201	Oil Pressure Gauge Hose	(3)	Component Tool
⑯	07947–6340201	Driver Attachment, E	1	
⑰	07746–0030100	Driver	1	
⑱	07GAD–PG20100	Pin Driver, 5.0 mm	1	
⑲	07GAD–PG40100	Oil Seal Driver	1	
⑳	07GAJ–PG20200	Preload Inspection Tool	1	

10. Driveshafts

No.	Tool Number	Description	Q'ty	Remarks
①	07749–0010000	Driver	1	
②	07746–0040900	Pilot, 40 mm	1	
③	07965–SD90100	Support Base	1	
④	07746–0010400	Attachment, 52 x 55 mm	1	
⑤	07746–0010500	Attachment, 62 x 68 mm	1	
⑥	07965–SD90200	Support Collar	1	
⑦	07947–SD90200	Oil Seal Driver	1	
⑧	07947–6340201	Attachment	1	

Special Tools

Existing Tools (Common with Other Models)

11. Power Steering

No.	Tool Number	Description	Q'ty	Remarks
①	07916–SA50001	Locknut Wrench, 40 mm	1	
②	07406–0010200	P/S Pressure Gauge Assembly	1	
②-1	07406–0010300	Pressure Control Valve	(1)	Component tools
②-2	07406–0010400	Pressure Gauge	(1)	
③	07GAK–SE00100	P/S Joint Adaptor Kit	1	
③-1	07GAK–SE00110	Joint Adaptor (Pump)	(1)	Component tools
③-2	07GAK–SE00120	P/S Joint Adaptor (Hose)	(1)	
④	07406–0010101	Bypass Tube Joint	1	
⑤	07725–0030000	Universal Holder	1	07725–0010101 may also be used.
⑥	07953–7190000	Collar Driver	1	
⑦	07941–6920003	Ball Joint Remover	1	
⑧	07944–6110200	Pin Driver, 8 mm	1	07941–6920002 may also be used.
⑨	07746–0010300	Attachment, 42 x 47 mm	1	
⑩	07749–0010000	Driver	1	07949–6110000 may also be used.
⑪	07GAG–SD40000	P/S Tool Kit	1	
⑪-1	07GAG–SD40100	Piston Seal Ring Guide	(1)	Component tools
⑪-2	07GAG–SD40200	Piston Seal Sizing Tool	(1)	
⑪-3	07GAG–SD40300	Cylinder End Seal Slider	(1)	
⑪-4	07GAG–SD40400	End Seal Guide	(1)	
⑪-5	07GAG–SD40600	P/S Tool Kit Case	(1)	
⑫	07947–6340300	Driver Attachment	1	
⑬	07974–SA50800	Ball Joint Boot Clip Installation Guide	1	
⑭	07974–SA50600	Pinion Seal Guide	1	

12. Suspension

No.	Tool Number	Description	Q'ty	Remarks
①	07GAF–SD40100	Hub Assembly Pin	1	
②	07GAF–SD40200	Hub Assembly Driver Attachment	1	
③	07GAF–SD40300	Ball Joint Disassembly Tool Kit	1	
③-1	07GAF–SD40310	Ball Joint Remover Base	(1)	Component tools
③-2	07GAF–SD40320	Ball Joint Installer Base	(1)	
③-3	07GAF–SD40330	Ball Joint Remover/Installer	(1)	
④	07GAF–SD40700	Hub Dis/Assembly Base	1	
⑤	07GAG–SD40700	Ball Joint Boot Clip Installation Guide	1	
⑥	07HAD–SG00100	Bearing Driver Attachment	1	
⑦	07GAK–SD40101	Wheel Alignment Gauge Attachment	1	
⑧	07941–6920003	Ball Joint Remover	1	07941–6920002 may also be used.
⑨	07965–6340301	Hub Dis/Assembly Tool, Base A	1	
⑩	07749–0010000	Driver	1	07949–6110000 may also be used.
⑪	07746–0010500	Attachment, 62 x 68 mm	2	When servicing rear axle, 2 tools are reqiored:
⑫	07GAF–SE00401	Front Hub Base	1	
⑬	07965–6920201	Hub Dis/Assembly Tool B	1	
⑭	07974–SA50800	Ball Joint Boot Clip Installation Guide B	1	
⑮	07GAE–SE00101	Shock Absorber Spring Compressor	1	

13. Brakes

No.	Tool Number	Description	Q'ty	Remarks
①	07GAJ–SD40100	Brake Booster Rod Adjustment Gauge	1	
②	07907–SB00000	ALB T-Wrench	1	
③	07HAE–SG00100	Brake Spring Compressor	1	
④	07508–SB0000	ALB Checker	1	
⑤	07HAJ–SG00300	ALB Checker Adaptor	1	
⑥	07914–SA50000	Snap Ring Pliers	1	
⑦	07921–0010100	Flare Nut Wrench	1	
⑧	07510–6340300	Vacuum Joint Tube, A	1	
⑨	07410–5790500	Tube Joint Adapter	1	
⑩	07404–5790300	Vacuum Gauge	1	
⑪	07HAK–SG00110	Pressure Gauge Joint Pipe	2	
⑪-1	07510–6340100	Pressure Gauge Joint Pipe	(1)	ϕ10 mm ┐ Component Tools
⑪-2	07HAK–SG00100	Pressure Gauge Joint Pipe	(1)	ϕ12 mm ┘
⑫	07410–5790100	Pressure Gauge Attachment	2	
⑬	07406–5790200	Pressure Gauge	2	

14. Body

No.	Tool Number	Description	Q'ty	Remarks
①	07GAZ–SE30100	Torsion Rod Assembly Tool	1	

16. Electrical

No.	Tool Number	Description	Q'ty	Remarks
①	07GAC–SE00200	Fuel Sender Wrench	1	

Standards and Service Limits

5. Engine/Cylinder Head, Valve Train

	MEASUREMENT		STANDARD (NEW)	SERVICE LIMIT
Compression	200 min^{-1} (rpm) and wide-open throttle		Nominal: 1.177 kPa (12.0 kg/cm², 171 psi) Minimum: 981 kPa (10.0 kg/cm², 142 psi) Maximum variation: 196 kPa (2 kg/cm², 28 psi)	
Cylinder head	Warpage		—	0.05 (0.002)
	Height		133 (5.24)	132.8 (5.23)
Camshaft	End play		0.05–0.15 (0.002–0.006)	0.5 (0.02)
	Oil clearance		0.045–0.081 (0.0018–0.0032)	0.10 (0.004)
	Runout		0.015 (0.0006)	0.03 (0.001)
	Cam lobe height	IN	39.460 (1.5535)	—
		EX	39.409 (1.5515)	—
Valve	Valve clearance	IN	0	—
		EX	0	—
	Valve stem O.D.	IN	6.58–6.59 (0.2591–0.2594)	6.55 (0.258)
		EX	6.55–6.56 (0.2579–0.2583)	6.52 (0.257)
	Stem-to-guide clearance	IN	0.02–0.05 (0.001–0.002)	0.08 (0.003)
		EX	0.05–0.08 (0.002–0.003)	0.11 (0.004)
	Stem installed height	IN	50.00 (1.969)	50.35 (1.982)
		EX	47.50 (1.870)	47.85 (1.884)
Valve seat	Width	IN and EX	1.25–1.55 (0.049–0.061)	2.0 (0.08)
Valve spring	Free length	IN	53.90 (2.12)	52.90 (2.08)
		EX Inner	44.95 (1.77)	43.95 (1.73)
		Outer	49.55 (1.95)	48.55 (1.91)
	Squareness	IN	—	1.89 (0.072)
		EX Inner	—	1.57 (0.062)
		Outer	—	1.73 (0.068)
Valve guide	I.D.	IN and EX	6.61–6.63 (0.260–0.261)	6.65 (0.262)
Rocker arm	Arm-to-shaft clearance		0.018–0.054 (0.0007–0.0021)	0.08 (0.003)
Push rod	Runout		—	0.02 (0.0008)
Hydraulic tappet	Compression stroke		0.01–0.08 (0.0003–0.0031)	—

5. Engine/Engine Block

	MEASUREMENT		STANDARD (NEW)	SERVICE LIMIT
Cylinder block	Warpage of deck surface		0.07 (0.003) max.	0.10 (0.004)
	Bore diameter	A	87.00–87.02 (3.4252–3.4259)	87.07 (3.4279)
	Bore taper		—	0.05 (0.002)
	Reboring limit		—	0.5 (0.02)
Piston	Skirt O.D. (At 18 mm (0.71 in) from bottom of skirt)	A	86.981–86.994 (3.4244–3.4250)	86.97 (3.4240)
		B	86.971–86.984 (3.4240–3.4246)	86.96 (3.4236)
	Clearance in cylinder		0.016–0.039 (0.0006–0.0015)	0.08 (0.003)
	Piston-to-ring clearance (top and second)		0.015–0.045 (0.0006–0.0018)	0.13 (0.005)
Piston ring	Ring end gap Top		0.20–0.35 (0.008–0.014)	0.6 (0.02)
	Second		0.35–0.50 (0.014–0.019)	0.75 (0.03)
	Oil		0.20–0.70 (0.008–0.028)	0.8 (0.03)
Connecting rod	Pin-to-rod interference		0.013–0.032 (0.0005–0.0013)	—
	Large end bore diameter		Nominal 55 (2.17)	—
	End play installed on crankshaft		0.15–0.30 (0.006–0.012)	0.40 (0.016)
Crankshaft	Main journal diameter		63.976–64.000 (2.5187–2.5197)	—
	Taper/out-of-round, main journal		0.005 (0.0002) max.	0.010 (0.0004)
	Rod journal diameter		51.976–52.000 (2.0463–2.0472)	—
	Taper/out-of-round, rod journal		0.005 (0.0002) max.	0.010 (0.0004)
	End play		0.10–0.35 (0.004–0.014)	0.45 (0.018)
	Runout		0.01 (0.0004) max.	0.015 (0.0006)
Bearings	Main bearing-to-journal oil clearance		0.024–0.048 (0.0009–0.0019)	0.05 (0.002)
	Rod bearing-to-journal oil clearance		0.026–0.050 (0.0010–0.002)	0.05 (0.002)

Unit: mm (in.)

5. Engine/Engine Lubrication

	MEASUREMENT		STANDARD (NEW)	SERVICE LIMIT
Engine oil	Capacity ℓ (U.S. qt., Imp. qt.)		5.7 (6.0, 5.0) After engine disassembly 4.5 (4.8, 4.0) After oil change, including oil filter 4.0 (4.2, 3.5) After oil change, without oil filter	
Oil pump	Displacement		55.9 ℓ (14.8 U.S. gal., 12.3 Imp. gal.) 5,000 min^{-1} (rpm)	
	Inner-to-outer rotor radial clearance Pump body-to-rotor radial clearance Pump body-to-rotor side clearance		0.04–0.18 (0.002–0.007) 0.10–0.18 (0.004–0.007) 0.02–0.07 (0.001–0.003)	0.2 (0.008) 0.2 (0.008) 0.12 (0.005)
Relief valve	Pressure setting 80°C (176°F)	At Idle	137 kPa (1.4 kg/cm², 20 psi) min.	
		At 3,000 min^{-1} (rpm)	490–569 kPa (5.0–5.8 kg/cm², 71–82 psi)	

5. Engine/Cooling

	MEASUREMENT	STANDARD (NEW)	
Radiator	Capacity (incl. heates) ℓ (U.S. qt., Imp. qt.) (Includes reservoir tank 0.7 (0.74, 0.61)	M/T: 8.8 (9.3, 7.7) A/T: 8.7 (9.2, 7.7)	
	Pressure cap opening pressure	88–118 kPa (0.9–1.20 kg/cm², 14–17 psi)	
Thermostat	Starts to open Full open Valve lift at full open	78°C ± 2 (172°F ± 3) 91°C (196°F) 8 (0.31) min.	86–90°C (187–194°F)
Water pump	Gear ratio (crankshaft) Capacity: ℓ per min/at min^{-1} (rpm)	1.044 150/6.000 (39.6 U.S. gal, 33 Imp. gal./6,000 min^{-1} (rpm)	
Cooling fan	Fan-to-core clearance Thermoswitch "ON" temperature (Low) Thermoswitch "OFF" temperature (Low) Thermoswitch "ON" temperature (High) Thermoswitch "OFF" temperature (High)	7.5 (0.29) 81°–87°C (179°–189°F) Substract 6° ± 2°C (43° ± 3°F) from the actual "ON" temperature (LOW). 87°–93°C (188°–199°F) Substract 6° ± 2°C (43° ± 3°F) from the actual "ON" temperature (HIGH).	

6. Fuel and Emissions

	MEASUREMENT	STANDARD (NEW)
Fuel pump	Delivery pressure Displacement	250 kPa (2.55 kg/cm², 36 psi) 230 cm³ (cc)/min in 10 seconds
	Relief valve opening pressure	441–588 kPa (4.5–6.0 kg/cm², 64–85 psi)
Pressure regulator	Pressure	245–255 kPa (2.5–2.6 kg/cm², 35–37 psi)
Fuel Tank	Capacity	68 ℓ (18.0 U.S. gal., 15.0 Imp. gal.)
Engine	Fast idle	1,100–1,900 min^{-1} (rpm)
	Idle speed with headlights and cooling fan off	Manual 680 ± 50 min^{-1} (rpm) with cata, 720 ± 50 min^{-1} (rpm) without cata Automatic 680 ± 50 min^{-1} (rpm) ("N" position)
	Idle CO	0.1 % with cata, 2.0 % max without cata

7. Clutch

	MEASUREMENT	STANDARD (NEW)	SERVICE LIMIT
Clutch pedal	Pedal height Stroke Pedal play Disengagement height	153 (6.0) to carpet 145–150 (5.7–5.9) 9–15 (0.4–0.6) 90 (3.5) min. to floor	— — — —
Flywheel	Clutch surface runout	0.05 (0.002) max.	0.15 (0.006)
Clutch plate	Rivet head depth Surface runout Radial play in splines Thickness	1.3 (0.05) min. 0.8 (0.03) max. 0.7–2.1 (0.028–0.083) 8.5–9.2 (0.33–0.36)	0.2 (0.008) 1.0 (0.04) 4.0 (0.16) 6.1 (0.24)
Clutch release bearing holder	I.D. Holder-to-guide sleeve clearance	35.00–35.059 (1.378–1.380) 0.05–0.15 (0.002–0.006)	35.09 (1.381) 0.22 (0.009)
Clutch cover	Uneveness of diaphragm spring	0.6 (0.02) max.	0.8 (0.03)

(cont'd)

Standards and Service Limits

8. Manual Transmission

	MEASUREMENT	STANDARD (NEW)	SERVICE LIMIT
Transmission oil	Capacity ℓ (U.S. qt., Imp. qt.)	2.3 (2.4, 2.0) at assembly 2.2 (2.3, 1.9) at oil change	
Mainshaft	End play Diameter of ball bearing contact area Diameter of third gear contact area Diameter of ball bearing contact area Runout	0.14–0.21 (0.006–0.083) 27.987–28.000 (1.1018–1.1024) 37.984–38.000 (1.4954–1.4961) 27.987–28.000 (1.1018–1.1024) 0.02 (0.0008) max.	Selection with 14 type shims 27.940 (1.1000) 37.930 (1.4933) 27.940 (1.1000) 0.05 (0.002)
Mainshaft third and fourth gears	I.D. End play Thickness 3rd gear 4th gear	43.009–43.025 (1.6933–1.6939) 0.06–0.21 (0.0024–0.0083) 35.42–35.47 (1.3945–1.3965) 33.45–33.47 (1.3169–1.3177)	43.080 (1.6961) 0.30 (0.012) 35.30 (1.3898) 33.33 (1.3122)
Mainshaft fifth gear	I.D. End play Thickness	43.009–43.025 (1.6933–1.6939) 0.06–0.21 (0.0024–0.0083) 31.92–31.97 (1.2567–1.2587)	43.080 (1.6961) 0.30 (0.012) 31.80 (1.2520)
Countershaft	End play Diameter of needle bearing contact area Diameter of ball bearing needle bearing contact area Diameter of low gear contact area Runout	0.10–0.35 (0.004–0.014) 33.000–33.015 (1.2992–1.2998) 24.987–25.000 (0.9837–0.9845) 39.984–40.000 (1.5742–1.5748) 0.02 (0.0008) max.	0.50 (0.02) 32.95 (1.297) 24.94 (0.982) 39.93 (1.572) 0.05 (0.002)
Countershaft low gear	I.D. End play	46.009–46.025 (1.8114–1.8120) 0.03–0.08 (0.0012–0.0031)	46.08 (1.923) Selection with 5 type shims
Countershaft second gear	I.D. End play Thickness	50.009–50.025 (1.9689–1.9695) 0.03–0.10 (0.0012–0.0039) 32.92–32.97 (1.2961–1.2980)	50.08 (1.972) Selection with 2 type collars 32.8 (1.2913)
Spacer collar (Countershaft second gear)	I.D. O.D. Length A B	36.48–36.49 (1.4362–1.4366) 43.984–44.000 (1.7317–1.7323) 28.98–29.00 (1.1409–1.1417) 29.03–29.05 (1.1429–1.1437)	36.50 (1.437) 43.94 (1.730) —— ——
Spacer collar (Mainshaft fourth and fifth gears)	I.D. O.D. Length A B	31.002–31.012 (1.2205–1.2209) 37.989–38.000 (1.4956–1.4961) 55.95–56.05 (2.2028–2.2067) 26.03–26.08 (1.0248–1.0268)	31.06 (1.223) 37.94 (1.494) —— ——
Reverse idler gear	I.D. Gear-to-reverse gear shaft clearance	20.020–20.041 (0.7882–0.7890) 0.020–0.054 (0.0008–0.0021)	20.09 (0.7909) 0.160 (0.0006)
Synchronizer ring	Ring-to-gear clearance (ring pushed against gear)	0.85–1.10 (0.0335–0.0433)	0.40 (0.016)
Shift fork	Synchronizer sleeve gear Low and 2nd gears 3rd and 4th gears 5th gear Fork-to-synchronizer sleeve clearance	8.90–9.00 (0.3504–0.3543) 8.40–8.50 (0.3307–0.3346) 5.40–5.50 (0.2126–0.2165) 0.45–0.65 (0.018–0.026)	—— —— —— 1.0 (0.039)
Reverse shift fork	End gap Fork-to-reverse idler gear clearance Groove width Fork-to-fifth/reverse shift shaft clearance	13.0–13.3 (0.5118–0.5236) 0.5–1.1 (0.018–0.043) 7.05–7.25 (0.2776–0.2854) 0.05–0.35 (0.002–0.014)	—— 1.8 (0.071) —— 0.5 (0.02)
Shift arm	Width of groove in shift rod guide Shift arm-to-shift rod guide clearance Width in shift guide Shift arm-to-shift guide clearance	8.1–8.2 (0.319–0.323) 0.2–0.3 (0.008–0.012) 13.05–13.25 (0.514–0.522) 0.05–0.35 (0.002–0.014)	—— 0.55 (0.022) —— 0.6 (0.02)
Interlock	O.D. Interlock-to-change piece clearance	12.05–12.15 (0.4744–0.4783) 0.05–0.25 (0.002–0.010)	—— 0.5 (0.02)
Ring gear	Backlash	0.085–0.142 (0.0033–0.0056)	0.2 (0.0079)
Differential carrier	Pinion shaft bore diameter Carrier-to-pinion shaft clearance Driveshaft bore diameter Carrier-to-driveshaft clearance	18.000–18.018 (0.7087–0.7094) 0.016–0.052 (0.0006–0.0020) 30.000–30.021 (1.1811–1.1819) 0.025–0.066 (0.0010–0.0026)	—— 0.1 (0.004) —— 0.12 (0.005)
Differential pinion gear	Backlash Pinion gear bore diameter Pinion gear-to-pinion shaft clearance	0.08–0.15 (0.003–0.006) 18.043–18.061 (0.7104–0.7111) 0.057–0.095 (0.0022–0.0037)	Selection with 8 types of washers —— 0.15 (0.006)
Differential taper roller bearing	Preload N·m (kg-m, lb-ft)	1.4–2.0 (0.14–0.20, 1.0–1.4)	Selection with 20 types washers

Unit: mm (in.)

9. Automatic Transmission

	MEASUREMENT		STANDARD (NEW)	SERVICE LIMIT
Transmission oil	Capacity ℓ (U.S. qt., Imp. qt.)		3.2 (3.4, 2.8) at oil change 6.5 (6.9, 5.7) at assembly	
Hydraulic pressure	Line pressure at 2,000 min⁻¹ (rpm)		814–863 kPa (8.3–8.8 kg/cm², 118–125 psi)	765 kPa (7.8 kg/cm², 111 psi)
	4th, 3rd, 2nd clutch pressure at 2,000 min⁻¹ (rpm)		490–863 kPa (5.0–8.8 kg/cm², 71–125 psi)	441 kPa (4.5 kg/cm², 64 psi) with lever released 765 kPa (7.8 kg/cm², 111 psi) with throttle more than 3/8 OPEN
	1st clutch pressure at 2,000 min⁻¹ (rpm)		814–863 kPa (8.3–8.8 kg/cm², 118–125 psi)	765 kPa (7.8 kg/cm², 111 psi)
	Throttle pressure B	Full closed	0	—
		Full open	814–863 kPa (8.3–8.8 kg/cm², 118–125 psi)	765 kPa (7.8 kg/cm², 111 psi)
	Modulator pressure		520–559 kPa (5.3–5.7 kg/cm², 75–81 psi)	490 kPa (5.0 kg/cm², 71 psi)
Stall speed	Check with car on level ground		2,150–2,450 rpm	—
Clutch	Clutch initial clearance	1st	0.65–0.85 (0.026–0.034)	—
		2nd, 3rd	0.5–0.7 (0.020–0.028)	—
		4th	0.4–0.6 (0.016–0.024)	—
	Clutch return spring free length		31.0 (1.22)	29.0 (1.14)
	Clutch disc thickness		1.88–2.0 (0.074–0.079)	Until grooves worn out
	Clutch plate thickness		1.95–2.05 (0.077–0.079)	Discoloration
	Clutch end plate thickness	Mark 1	2.05–2.10 (0.081–0.083)	↑
		Mark 2	2.15–2.20 (0.085–0.087)	
		Mark 3	2.25–2.30 (0.089–0.091)	
		Mark 4	2.35–2.40 (0.093–0.094)	
		Mark 5	2.45–2.50 (0.096–0.098)	
		Mark 6	2.55–2.60 (0.100–0.102)	
		Mark 7	2.65–2.70 (0.104–0.106)	
		Mark 8	2.75–2.80 (0.108–0.110)	
		Mark 9	2.85–2.90 (0.112–0.114)	
		Mark 10	2.95–3.00 (0.116–0.118)	Discoloration
Transmission	Diameter of needle bearing contact area on main and stator shaft		22.980–22.993 (0.9047–0.9052)	Wear or damage
	Diameter of needle bearing contact area on mainshaft 2nd gear		35.975–35.991 (1.4163–1.4169)	↕
	Diameter of needle bearing contact area on mainshaft 4th gear collar		31.975–31.991 (1.2588–1.2594)	
	Diameter of needle bearing contact area on mainshaft 1st gear collar		30.975–30.991 (1.2195–1.2201)	
	Diameter of needle bearing contact area on countershaft (R side)		38.505–38.515 (1.5159–1.5163)	
	Diameter of needle bearing contact area on countershaft 3rd gear		43.975–43.991 (1.7313–1.7319)	
	Diameter of needle bearing contact area on countershaft 4th gear		31.975–31.991 (1.2589–1.2595)	
	Diameter of needle bearing contact area on countershaft reverse gear collar		31.975–31.991 (1.2589–1.2595)	
	Diameter of needle bearing contact area on countershaft 1st gear collar		31.975–31.991 (1.2589–1.2595)	
	Diameter of needle bearing contact area on reverse idle gear		13.990–14.000 (0.5508–0.5512)	
	Reverse idler shaft holder I.D.		14.416–14.434 (0.5676–0.5683)	
	Mainshaft 2nd gear I.D.		42.000–42.016 (1.6141–1.6148)	
	Mainshaft 1st gear I.D.		36.000–36.016 (1.4173–1.4179)	
	Countershaft 4th gear I.D.		38.000–38.016 (1.4961–1.4966)	
	Countershaft 3rd gear I.D.		49.000–49.016 (1.9291–1.9298)	
	Countershaft 1st gear I.D.		39.000–39.016 (1.5354–1.5361)	
	Countershaft reverse gear I.D.		39.000–39.016 (1.5354–1.5361)	↓
	Reverse idle gear I.D.		18.007–18.020 (0.7086–0.7094)	Wear or damage
	Mainshaft 4th gear end play		0.10–0.22 (0.004–0.009)	—
	Mainshaft 2nd gear end play		0.07–0.12 (0.003–0.005)	Adjustable
	Mainshaft 1st gear end play		0.08–0.24 (0.003–0.009)	—
	Countershaft 3rd gear end play		0.07–0.17 (0.003–0.007)	—
	Countershaft 2nd gear end play		0.07–0.12 (0.003–0.006)	Adjustable
	Reverse idler gear end play		0.05–0.18 (0.002–0.007)	—
	Countershaft reverse gear end play		0.10–0.25 (0.004–0.010)	—
	Reverse gear hub O.D.		51.87–51.90 (2.0421–2.0433)	Wear or damage

(cont'd)

9. Automatic Transmission (cont'd)

	MEASUREMENT		STANDARD (NEW)	SERVICE LIMIT
Transmission (cont'd)	Thrust washer thickness			
	Mainshaft 2nd gear	A	3.97–4.00 (0.156–0.157)	—
		B	4.02–4.05 (0.158–0.159)	—
		C	4.07–4.10 (0.160–0.161)	—
		D	4.12–4.15 (0.162–0.163)	—
		E	4.17–4.20 (0.164–0.165)	—
		F	4.22–4.25 (0.166–0.167)	—
		G	4.27–4.30 (0.168–0.169)	—
		H	4.32–4.35 (0.170–0.171)	—
		I	4.37–4.40 (0.172–0.173)	—
	Mainshaft bearing contact area (L side)		3.75–3.85 (0.148–0.152)	Wear or damage
	Mainshaft 1st gear		2.43–2.50 (0.096–0.098)	Wear or damage
	"L" collar frange thickness		4.35–4.50 (1.1713–1.1772)	
	Countershaft 4th gear collar thickness	A	47.42–47.45 (1.8669–1.8681)	—
		B	47.47–47.50 (1.8689–1.8701)	—
		C	47.52–47.55 (1.8709–1.8720)	—
		D	47.57–47.60 (1.8728–1.8740)	—
		E	47.62–47.65 (1.8748–1.8760)	—
		F	47.67–47.70 (1.8768–1.8779)	—
		G	47.72–47.75 (1.8787–1.8799)	—
		H	47.77–47.80 (1.8807–1.8819)	—
		I	47.82–47.85 (1.8827–1.8839)	—
		J	47.87–47.90 (1.8846–1.8858)	—
	Thrust washer thickness (mainshaft 1st gear R side)		1.45–1.50 (0.057–0.059)	1.4 (0.055)
	Mainshaft 1st gear collar length		24.50–24.55 (0.4646–0.9665)	—
	Mainshaft 1st gear collar flange thickness		2.5–2.6 (0.098–0.102)	Wear or damage
	Countershaft reverse gear collar length		12.0–12.1 (0.472–0.476)	—
	Countershaft reverse gear collar flange thickness		2.4–2.6 (0.094–0.102)	Wear or damage
	Countershaft 1st gear collar length		12.0–12.1 (0.472–0.476)	—
	Countershaft 1st gear collar flange thickness		2.4–2.6 (0.095–0.102)	Wear or damage
	Diameter of countershaft one-way clutch contact area		83.339–83.365 (3.2811–3.2821)	Wear or damage
	Diameter of parking gear one-way clutch contact area		66.685–66.698 (2.6254–2.6259)	Wear or damage
	Mainshaft feed pipe O.D.		8.97–8.98 (0.3531–0.3535)	8.95 (0.3524)
	Countershaft feed pipe O.D.		7.97–7.98 (0.3138–0.3142)	7.95 (0.31)
	Mainshaft sealing ring 32 mm Thickness		1.980–1.995 (0.0780–0.0785)	1.8 (0.071)
	Mainshaft bushing I.D.		6.018–6.030 (0.2369–0.2374)	6.045 (0.238)
	Mainshaft bushing I.D.		9.000–9.015 (0.3543–0.3549)	9.03 (0.356)
	Countershaft bushing I.D.		8.000–8.015 (0.3150–0.3156)	8.03 (0.316)
	Mainshaft sealing ring groove width		2.025–2.060 (0.0797–0.0811)	2.08 (0.082)
	Selector hub O.D.		51.87–51.90	Wear or damage
Regulator valve body	Sealing ring contact area diameter		35.000–35.025 (1.3780–1.3789)	35.05 (1.38)
Shifting device and parking brake control	Reverse shift fork thickness		5.9–6.0 (0.232–0.236)	5.4 (0.21)
	Parking brake ratchet pawl		—	Wear or other defect
	Parking gear		—	Wear or other defect
	Throttle cam stopper		18.5–18.6 (0.728–0.732)	—
Servo body	Shift fork shaft bore I.D.	A	14.000–14.005 (0.5512–0.5514)	—
		B	14.006–14.010 (0.5514–0.5516)	—
		C	14.011–14.015 (0.5516–0.5518)	—
	Shift fork shaft valve bore I.D.		37.000–37.039 (1.4567–1.4582)	37.045 (1.4585)
Valve body	Oil pump gear side clearance		0.03–0.05 (0.0012–0.0020)	0.07 (0.003)
	Oil pump gear-to-body clearance		Drive: 0.210–0.265 (0.0083–0.0104)	—
			Driven: 0.070–0.125 (0.003–0.005)	—
	Stator camshaft needle bearing contact I.D. (Torque converter side)		27.000–27.021 (1.0630–1.0638)	Wear or damage
	Stator camshaft needle bearing contact I.D. (Oil pump side)		29.000–29.013 (1.1417–1.1422)	—
	Oil pump driven gear I.D.		14.016–14.034 (0.5518–0.5525)	Wear or damage
	Oil pump shaft O.D.		13.980–13.990 (0.5504–0.5508)	Wear or damage

Unit: mm (in.)

9. Automatic Transmission (cont'd)

	MEASUREMENT	STANDARD (NEW)	SERVICE LIMIT
Ring gear	Backlash	0.085–0.142 (0.0033–0.0056)	0.2 (0.0079)
Differential carrier	Pinion shaft bore diameter	18.000–18.018 (0.7087–0.7094)	——
	Carrier-to-pinion shaft clearance	0.016–0.052 (0.0006–0.0020)	0.1 (0.004)
	Driveshaft bore diameter	30.000–30.021 (1.1811–1.1819)	——
	Carrier-to-driveshaft clearance	0.025–0.066 (0.0010–0.0026)	0.12 (0.005)
Differential pinion gear	Backlash	0.08–0.15 (0.003–0.006)	Selection with 8 types of washers
	Pinion gear bore diameter	18.043–18.061 (0.7104–0.7111)	——
	Pinion gear-to-pinion shaft clearance	0.057–0.095 (0.0022–0.0037)	0.15 (0.006)
Differential taper roller bearing	Preload N•m (kg-m, lb-ft) New	2.7–3.9 (0.28–0.4, 2.0–2.9)	Selection with 17 types washers
	Reused	2.5–3.6 (0.25–0.37, 1.8–2.7)	Selection with 17 types washers

10. Driveshaft

	MEASUREMENT	STANDARD (NEW)	SERVICE LIMIT
Driveshaft	Right boot As installed	533–537.5 (21.0–21.2)	——
	Left boot As installed	533–537.5 (21.0–21.2)	——

11. Power Steering

	MEASUREMENT	STANDARD (NEW)	SERVICE LIMIT
Steering wheel	Play	10 (0.39) Max.	——
	Pinion starting torque N•m (kg-m, ft-lb)	1.2 (0.12, 0.86)	
Power steering	Pump pressure with valve closed (Oil temp./speed: 40°C (104°F) min/idle. Do not run for more than 5 seconds) kPa (kg/cm², psi)	7845–8826 (80–90, 1138–1280)	
	Fluid capacity Reservoir	0.5 ℓ (0.53 U.S. qt., 0.44 Imp. qt.)	
	At change	approx 1.7 ℓ (1.8 U.S. qt., 1.5 Imp. qt.)	
Power steering belt	Deflection midway between pulleys/load	19–24 (0.75–0.94)/98N (10 kg/22 lb) for used belt 13–16 (0.51–0.63)/98N (10 kg/22 lb) after replacement of belt	

12. Suspension

	MEASUREMENT	STANDARD (NEW)	SERVICE LIMIT
Wheel alignment		Front / Rear	
	Camber	0°00' ± 1° / 0°00' ± 1°	
	Caster	1°40' ± 1°	
	Toe-in	0 ± 3 (0 ± 0.12) / 0 ± 2 (0 ± 0.08)	
Wheel	Rim runout Aluminum Axial	0–0.7 (0–0.028)	——
	Radial	0–0.7 (0–0.028)	——
Wheel bearing	End play Front	0	0.05
	Rear	0	0.05

(cont'd)

Standard and Service Limits

Unit: mm (in.)

13. Brake

	MEASUREMENT		STANDARD (NEW)	SERVICE LIMIT
Parking brake lever	Play in stroke 200N (20 kg, 44 lbs)		To be locked when pulled 7–11 notches	
Foot brake pedal	Pedal height Free play		170.6 (6.7) from floor 1–5 (0.04–0.20)	—— 5 (0.20)
Master cylinder	Piston-to-push rod clearance		0–0.4 (0–0.016)	——
Disc brake	Disc thickness	Front	21.0 (0.83)	19.0 (0.75)
		Rear	10.0 (0.39)	8.0 (0.31)
	Disc runout	Front/Rear	——	0.1 (0.004)/0.1 (0.004)
	Disc parallelism		——	0.015 (0.0006)
	Pad thickness	Front	11.5 (0.45)	3.0 (0.12)
		Rear	10.0 (0.39)	1.6 (0.06)
Brake booster	Characteristics	Vacuum (mmHg)	Pedal Pressure Kg (lb.)	Line Pressure kPa (Kg/cm², psi)
		0	20 (44)	774 (7.9, 112)
		300	20 (44)	6135 (62.6, 890)
		500	20 (44)	8252 (84.2, 1198)

16. Electrical

	MEASUREMENT	STANDARD (NEW)	
Ignition coil	Rated voltage	12 Volts	
	Primary winding resistance	0.315–0.385 ohms	
	Secondary winding resistance	9,040–13,560 ohms	
Ignition wire	Resistance	25,000 ohms max.	
Spark plug	Type	See section 16	
	Gap	1.0–1.1 (0.039–0.043)	
Ignition timing	At idling	15° ± 2°BTDC	
Battery	Lighting capacity (20-hour ratio) Starting capacity (5-second ratio)	60 Ampere Houres (KE, KQ only), 65 Ampere Houres (Others) 8.4 V minimum at 300 Ampere draw	
Alternator	Output	13.5 V/70 A	
	Coil resistance (rotor) Slip ring O.D. Brush length Brush spring tension	2.8–3.0 ohms 14.4 (0.57) 10.5 (0.41) 300–360 g (10.6–12.7 oz)	—— 14.0 (0.55) 5.5 (0.22) ——
Alternator belt	Deflection midway between pulleys/load	17–19.5 (0.67–0.77)/98 N (10 kg, 22 lb) for used belt 11–13 (0.43–0.51)/98 N (10 kg, 22 lb) after replacement of belt	
Starting motor		1.6 KW (ND)	
	MEASUREMENT	STANDARD (NEW)	SERVICE LIMIT
	Mica depth	0.5–0.8 (0.015–0.031)	0.2 (0.008)
	Commutator runout	0–0.05 (0–0.002)	0.4 (0.016)
	Commutator O.D.	29.9–30.0 (1.177–1.181)	29.0 (1.14)
	Brush length	15.0–15.5 (0.59–0.61)	10.0 (0.39)
	Spring pressure (new)	17–24 N (1.7–2.4 kg, 3.7–5.3 lb.)	——

Design Specifications

	ITEMS		METRIC	ENGLISH	NOTES
DIMENSIONS	Overall Length		4,780 mm	188.2 in.	
	Overall Width		1,745 mm	68.7 in.	
	Overall Height		1,370 mm	53.9 in.	
	Wheelbase		2,705 mm	106.5 in.	
	Track F/R		1,500/1,500 mm	59.1/59.1 in.	
	Ground Clearance		150 mm	5.9 in.	
	Seating Capacity		Five		
WEIGHTS	Engine weight		175 kg	386 lb.	
	Curb Weight	*with Cata- 5M/T*	1,395 kg	3,075 lb.	
		lytic converter 4A/T	1,415 kg	3,120 lb.	
		without Cata- 5M/T	1,390 kg	3,064 lb.	
		lytic Converter 4A/T	1,410 kg	3,108 lb.	
	Weight Distribution (Front/Rear)				
		with Cata- 5M/T	880 kg/515 kg	1,940 lb./1,135 lb.	
		lytic Converter 4A/T	900 kg/515 kg	1,984 lb./1,135 lb.	
		without Cata- 5M/T	875 kg/515 kg	1,929 lb./1,135 lb.	
		lytic Converter 4A/T	895 kg/515 kg	1,973 lb./1,135 lb.	
	Max. Permissible Weight		1,920 kg	4,233 lb.	
ENGINE	Type		Water cooled, 4-cycles O.H.C., gasoline engine		
	Cylinder Arrangement		V6-Cylinder, transverse		
	Bore and Stroke		87.0 X 75.0 mm	3.43 X 2.95 in.	
	Displacement		2,675 cm³ (cc)	163 cu. in.	
	Compression Ratio	with catalytic converter	9.0:1		
		without catalytic converter	9.4:1		
	Valve Train		Belt driven, single overhead camshaft		
	Lubrication System		Trochoid pump		
	Fuel Required	with catalytic converter	Unleaded gasoline with 91 research octane number or higher.		
		without catalytic converter	Leaded gasoline with 97 research octane number or higher.		
STARTER	Type	ND	Gear reduction		
	Normal output		1.6 KW		
	Nominal voltage		12 V		
	Hour rating		30 seconds		
	Direction of rotation		Counterclockwise as viewed from gear end		
	Weight	ND	4.6 kg	10.1 lb.	
TRANSMISSION	Clutch	M/T	Single plate dry, diaphragm spring		
		A/T	Torque Converter		
	Transmission	M/T	Synchronized 5 forward 1 reverse		
		A/T	Electronically controlled dual range 4 forward speed automatic; reverse		
	Primary Reduction		Direct 1:1		
	Gear Ratio		M/T	A/T	
		1st	2.923	2.647	
		2nd	1.789	1.555	
		3rd	1.222	1.058	
		4th	0.909	0.794	
		5th	0.750	———	
		Reverse	3.000	1.904	
	Final Reduction	M/T	Single helical gear, 4.200		
		A/T	Single helical gear, 4.266		
	Clutch Lining Area		217 cm²	33.6 sq. in.	
STEERING SYSTEM	Type		Rack and Pinion		
	Overall Ratio		17.6:1		
	Turns, lock-to-lock		3.36		
	Steering Wheel Dia.		385 mm	15.2 in.	
	Power Steering Oil Capacity		1.7 ℓ	1.8 U.S. qt., 1.5 Imp. qt.	
	Power Steering Oil		Genuine Power Steering Fluid P/N 08208-99961		
SUSPENSION	*Front*		Independent Double wishbone, coil spring		
	Rear		Independent Double wishbone, coil spring		
	Shock Absorber, Front and Rear		Telescopic, hydraulic		
WHEEL ALIGNMENT	Camber	Front and Rear	0°		
	Caster		1°40′		
	Toe-in	Front	0 mm	0 in.	
		Rear	0 mm	0 in.	

Design Specifications

	ITEMS	METRIC	ENGLISH	NOTES
BRAKE SYSTEM	Type, Front	Power assisted self-adjusting ventilated disc.		
	Type, Rear	Power assisted self-adjusting solid disc.		
	Pad and Lining Surface Area: Front/Rear	50.0/30.0 cm^2	7.8/4.6 sq. in.	
	Parking Brake Kind and Type	Mechanical expanding, rear two wheel brakes		
TIRES	Size	205/60 VR15		
AIR CONDITIONER	Cooling capacity	3,800 Kcal/h	15,077 BTU/h	
	– Conditions:			
	Compressor Revolution Speed	1,800 min^{-1} (rpm)		
	Outside air temperature	27.5°C	81.5°F	
	Outside air humidity	50%		
	Condenser air temperature	35°C	95°F	
	Condenser air velocity	4.5 m/sec.	14.8 ft/sec.	
	Blower capacity	420 m^3/h	14,836 cu. ft/h	
	Compressor (NIPPONDENSO) Type	Swash plate type		
	No. of cylinders	10		
	Capacity	172 cc/rev.	10.49 cu. in/rev.	
	Max. speed	8,000 min^{-1} (rpm)		
	Lubricant/capacity	80 cc	2.7 U.S. oz.	
	Condenser	Corrugated fin type		
	Evaporator	Corrugated fin type		
	Blower Type	Sirocco fan		
	Motor input	185 W (12 V)		
	Speed control	Infinitely variable		
	Max. capacity	420 m^3/h	14,836 cu. ft/h	
	Temp. Control	Air-mix type		
	Comp. Clutch Type	Dry, single plate, V-belt-1A		
	Power consumption	40 W max.	12 V	
	Refrigerant Type	R-12		
	Quantity	0.90 ± 0.05 kg	1.88 ± 0.11 lb.	
ELECTRICAL	Battery	12 V – 65 AH		
	Starter	12 V – 1.6 kW		
	Alternator	12 V – 70 amps		
	Fuses In the fuse box	7.5 A, 10 A, 15 A, 20 A		
	In the relay box	7.5A, 10 A, 15 A, 20 A, 30 A, 40 A, 70 A		
	Headlights High/Low	12 V – 60/55 W		
	Front Turn Signal Lights	12 V – 21 W		
	Rear Turn Signal Lights	12 V – 21 W		
	Side Turn Signal Lights	12 V – 21/5 W		
	Stop/Taillights	12 V – 5 W		
	Front Marker Lights	12 V – 5 W		
	Rear Marker Lights	12 V – 5 W		
	Back-up Lights	12 V – 21 W		
	License Plate Lights	12 V – 8 W		
	Gauge Lights	12 V – 3.4/3.0/1.4 W		
	Indicator Lights	12 V – 1.2W, 1.4 W		
	Warning Lights	12 V – 1.4 W		
	Glove Box Lights	12 V – 3.4 W		
	Dome Light	12 V – 8 W		
	Trunk Light	12 V – 3.4 W		
	Door Courtesy Lights	12V – 3.4 W		
	Illumination and Pilot Lights	12 V – 1.4 W, 1.12 W, 1.1 W, 0.91 W, 0.7 W, 0.56 W, LED		
	Heater Illumination Lights	12 V – 1.4 W, 2 W		
	Map Lights	12 V – 5 W		
	Vanity Mirror Light	12 V – 2 W		

Body Specifications

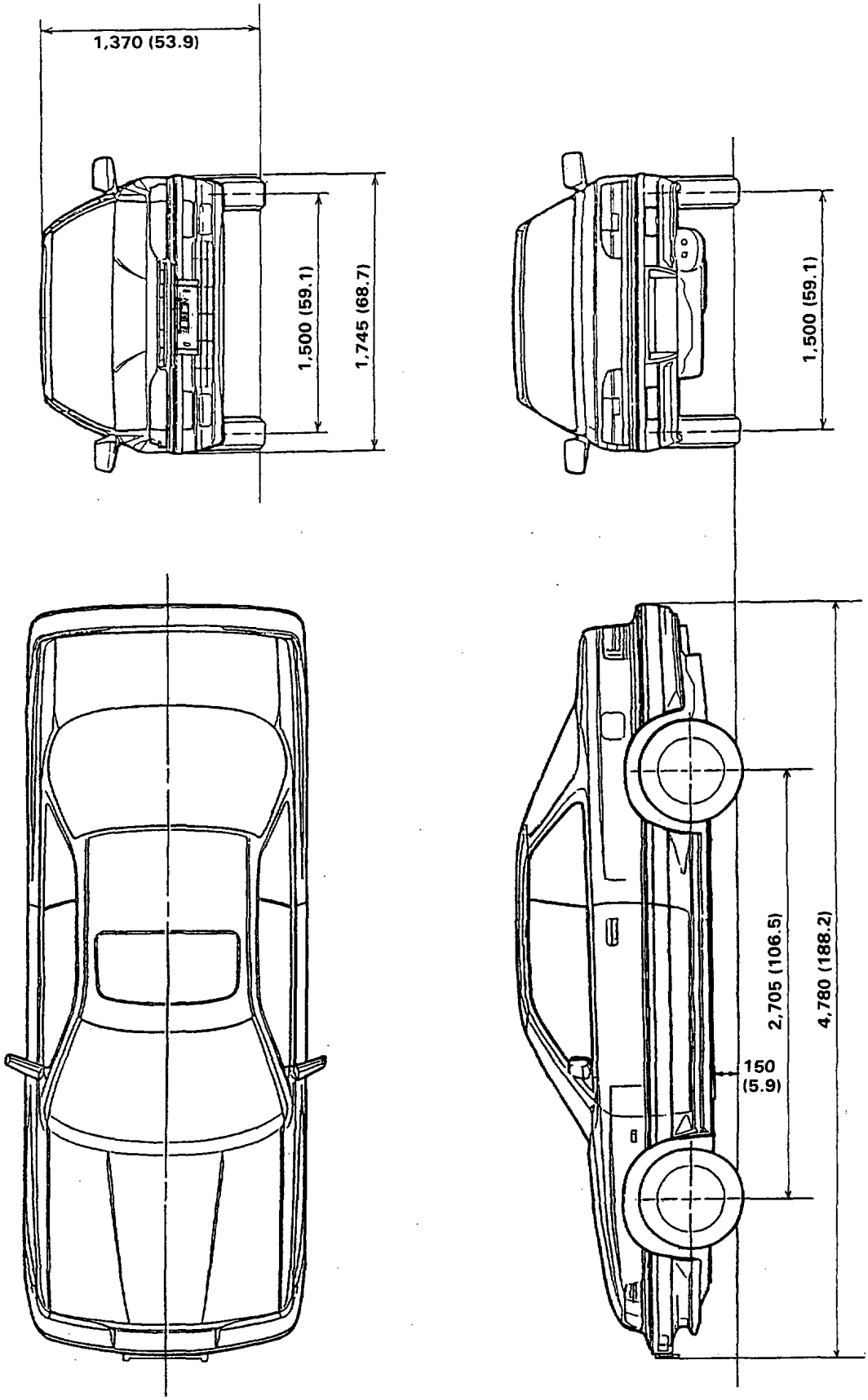

Frame Repair Chart

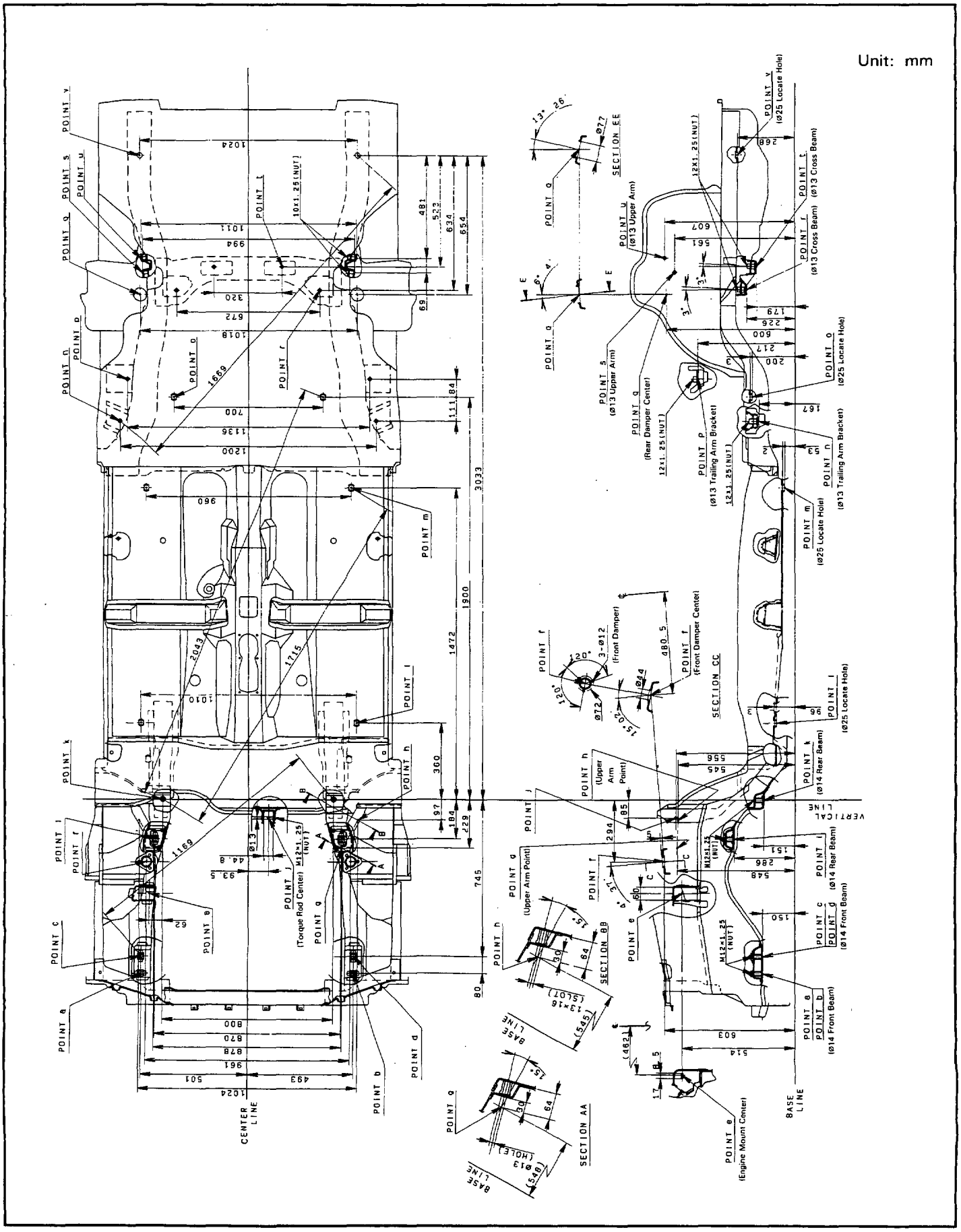

Lubrication Points

No.	LUBRICATION POINTS		LUBRICANT
1	Engine		API Service Grade: SE or SF SAE Viscosity: See chart below
2	Transmission	Manual Automatic	API Service Grade: SE or SF SAE30, 10W—30, 10W—40 or 20W—40 grade oil DEXRON® II Automatic transmission fluid
3 4	Brake reservoir Clutch reservoir		Brake fluid DOT 3
5	Steering gearbox (Power)		Steering grease P/N 08733—B070E
6 7 8 9 10 11 12 13 14 15 16 17 18 19 20 21 22	Steering ball joint Steering Boot Shift lever pivot (Manual) Shift rod clevis bushings Select lever (Automatic) Pedal linkage Throttle cable end Brake master cylinder push rod Parking brake wire end Trunk hinges Door hinges upper and lower Door opening detents Fuel filler lid Engine hood hinges Engine hood latch Parking brake equalizer Clutch release fork		Multi-purpose Grease
23	Caliper	Piston seal Dust seal Caliper pin Piston	Silicone Grease
24	Power steering reservoir		Power steering fluid P/N 08208—99961

Recommended Engine oil
(SE or SF Grade Only)

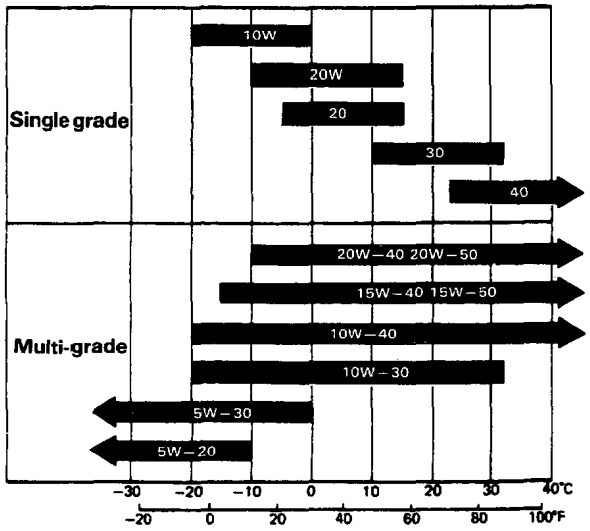

Engine oil viscosity for
ambient temperature ranges.

Recommended Manual Transmission Oil

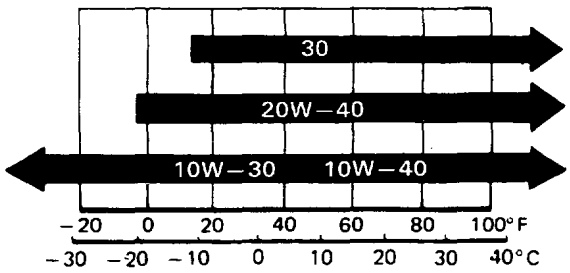

Transmission oil viscosity for
ambient temperature ranges.

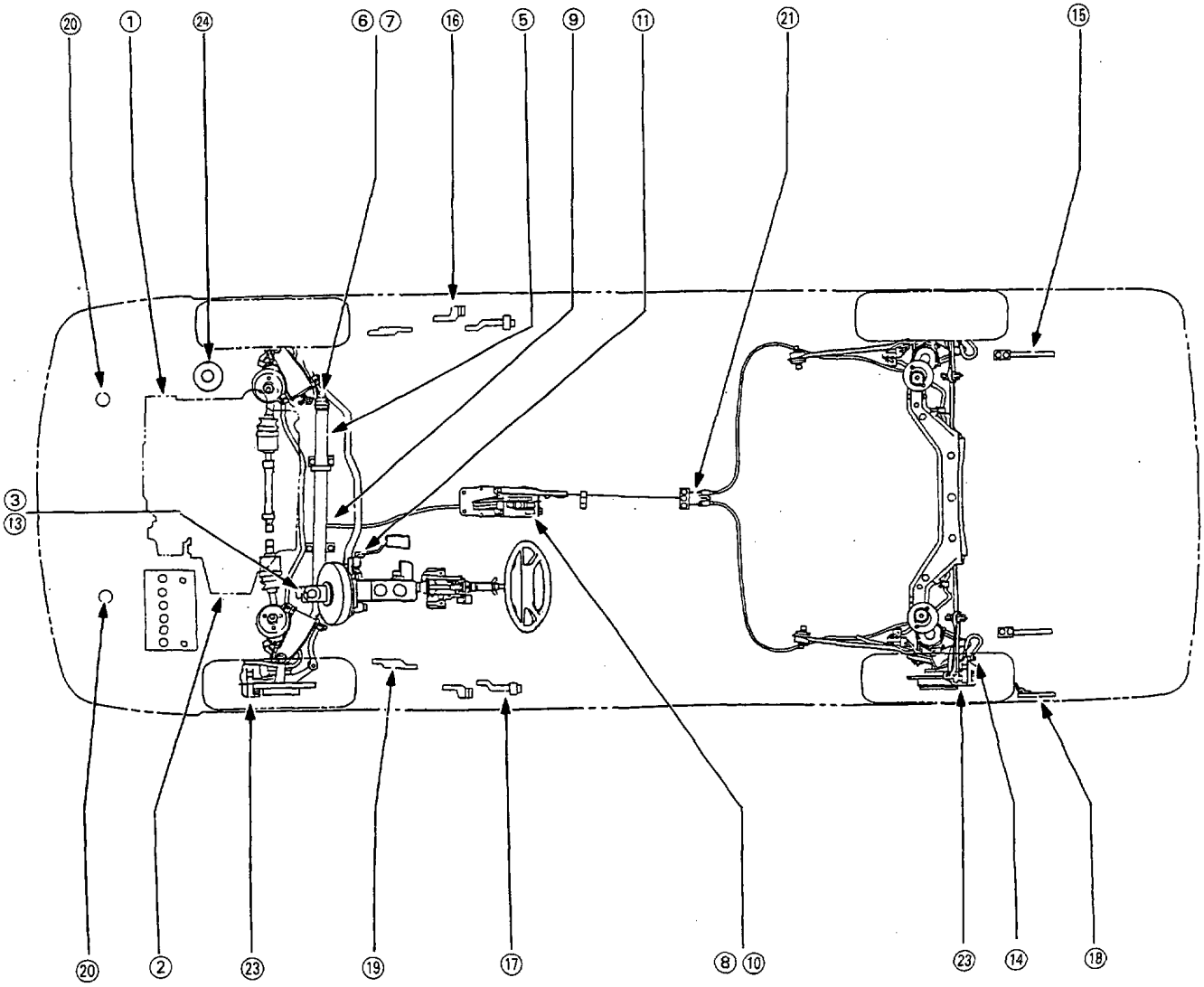
⑳
①
㉔
⑥⑦
⑯
⑤
⑨
⑪
㉑
⑮
③
⑬
⑳
②
㉓
⑲
⑰
⑧⑩
㉓
⑭
⑱

Maintenance Schedule

SERVICE AT THE INTERVAL OF LISTED KM (MILES) OR MONTHS, WHICHEVER OCCURS FIRST.							
	ITEMS	x 1,000 km	20	40	60	80	100
		x 1,000 miles	12	24	36	48	60
		months	12	24	36	48	60
	IDLE SPEED AND IDLE CO		I	I	I	I	I
	ALTERNATOR DRIVE BELT			I		I	
■	ENGINE OIL AND OIL FILTER		Replace every 10,000 km (6,000 miles) or 6 months				
■	TRANSMISSION OIL			R		R	
■	RADIATOR COOLANT					R*1	
	COOLING SYSTEM, HOSES AND CONNECTIONS			I		I	
	E.G.R. SYSTEM*4						I
	E.G.R. SYSTEM*2				I		I
	E.G.R. FILTER*2						R
	SECONDARY AIR SUPPLY SYSTEM*4						I
	AIR CLEANER ELEMENT			R		R	
	FUEL FILTER			R		R	
	TANK, FUEL LINE AND CONNECTIONS			I		I	
	EVAPORATIVE EMISSION CONTROL SYSTEM*3						I
	IGNITION TIMING AND CONTROL SYSTEM			I		I	
	SPARK PLUGS*2		R	R	R	R	R
	SPARK PLUGS*3			R		R	
	DISTRIBUTOR CAP AND ROTOR			I		I	
	IGNITION WIRING			I		I	
	CRANKCASE EMISSION CONTROL SYSTEM			I		I	
	BRAKE HOSES, LINES (Including ALB hoses and pipes)		I	I	I	I	I
	BRAKE FLUID (Including ALB fluid)			R		R	
	FRONT BRAKE DISCS AND CALIPERS		I	I	I	I	I
	FRONT BRAKE PADS		Inspect every 10,000 km (6,000 miles) or 6 months				
	REAR BRAKE, DISCS, CALIPERS AND PADS			I		I	
	PARKING BRAKE		I	I		I	
	EXHAUST PIPE AND MUFFLER		I	I	I	I	I
	SUSPENSION MOUNTING BOLTS		I	I	I	I	I
	FRONT WHEEL ALIGNMENT		I	I	I	I	I
	STEERING OPERATION, TIE ROD ENDS, STEERING GEAR BOX AND BOOTS		I	I		I	
	ALB HIGH PRESSURE HOSE					R	
	ALB OPERATION		I	I		I	
	POWER STEERING SYSTEM		I	I	I	I	I
	POWER STEERING PUMP BELT			I		I	
	CATALYTIC CONVERTER HEAT SHIELD (with catalytic converter)						I

R—Replace I—Inspect. After inspection, clean, adjust, repair or replace if necessary

■ REMARK: These service intervals assume routine checking and replenishment has been done, as needed, by the customer.

*1 Thereafter, replace every 2 years or 40,000 km (24,000 miles), whichever comes first.
*2 Only for cars using leaded gasoline
*3 Only for cars using unleaded gasoline
*4 Only for cars unleaded gasoline

CAUTION: The following items must be serviced more frequently on cars normally used under severe driving conditions. Refer to the chart below for the appropriate maintenance intervals.

"Severe driving conditions" include:

A: Repeated short distance driving
B: Driving in dusty conditions
C: Driving in severe, cold weather
D: Driving in areas using road salt or other corrosive materials
E: Driving on rough and/or muddy roads
F: Towing a trailer

R—Replace
I —Inspect. After inspection, clean, adjust, repair or replace if necessary.

Condition	Maintenance item	Maintenance operation	Interval
A B • • • F	Engine oil and oil filter	R	Every 5,000 km (3,000 miles) or 3 months
• • • • • F	Transmission oil	R	Every 20,000 Km (12,000 miles) or 12 months
A B • D E F	Front brake discs and calipers	I	Every 10,000 km (6,000 miles) or 6 months
A B • D E F	Rear brake discs, calipers and pads	I	Every 20,000 km (12,000 miles) or 12 months
• B C • E •	Power steering system	I	Every 10,000 km (6,000 miles) or 6 months

Lighting System

Component Location Index

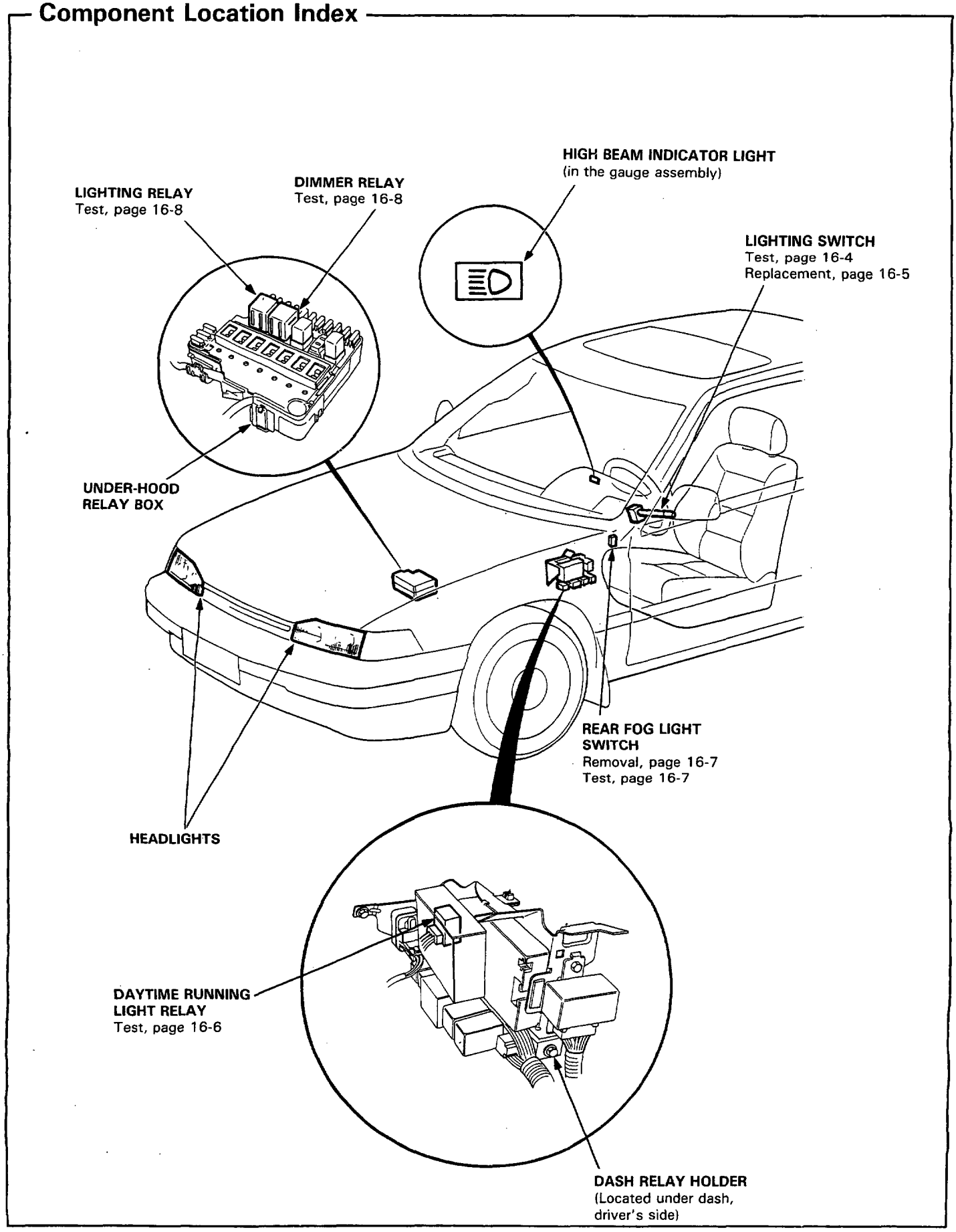

Circuit Diagram (With Daytime Light)

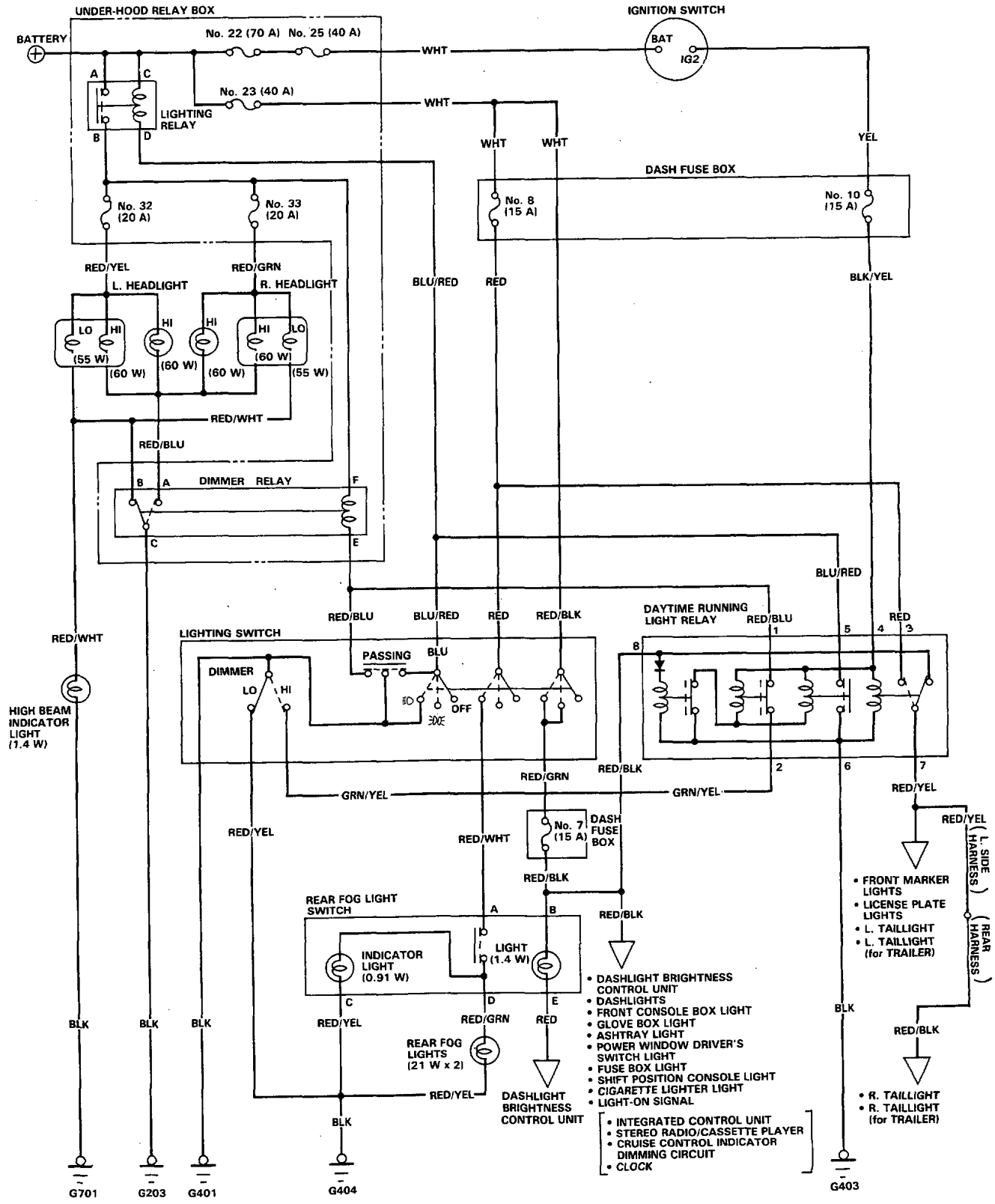

Lighting/Turn Signal Switch Test

1. Remove the dashboard lower panel and disconnect the 13-P connector from the side wire harness and the 3-P connector from the dash fuse box.

*: **Used for cruise control**

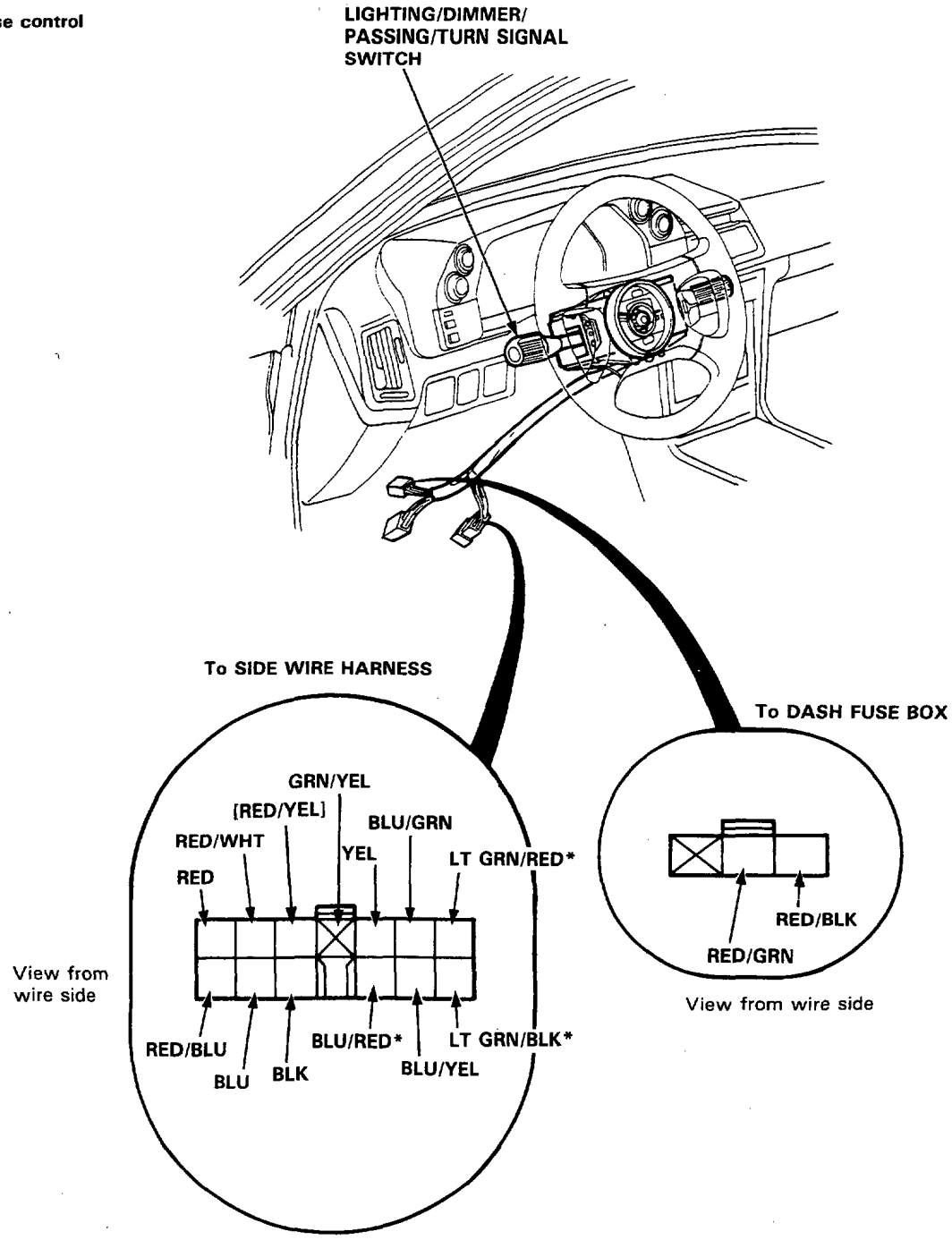

2. Check for continuity between the terminals in each switch position according to the tables.

EC model:

Lighting Switch

Terminal / Position	RED/ GRN	RED/ BLK	RED	RED/ WHT	BLU	BLK
OFF						
≡DO≡	○—○					
≡D	○—○		○—○		○—○	

Passing Switch

Terminal / Position	RED/ BLU		BLK	BLU
OFF				
ON	○—○		○—○	

(Internal connections)

Dimmer Switch

Terminal / Position	BLK		GRN/ YEL	RED/YEL
LOW	○—○			
HIGH	○—○			

(Internal connections)

Turn Signal Switch

Terminal / Position	YEL		BLU/GRN	BLU/YEL
R	○—▶|—○			
NEUTRAL				
L	○—▶|—○			

Lighting Switch Replacement

1. Remove the dashboard lower panel and disconnect the 13-P connector from the side wire harness and the 3-P connector from the dash fuse box.

2. Remove the steering wheel, then remove the lower and upper covers from the steering column.

3. Disconnect the 3-P connector from the slip ring.

4. Remove the 2 screws and slide the lighting switch out of the housing as shown.

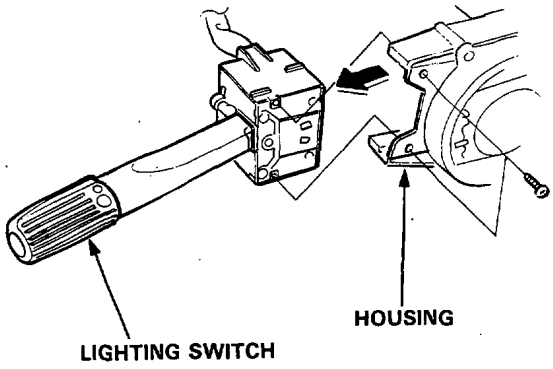

Daytime Running Light Relay Test

1. Remove the daytime running light relay from the dash relay bracket.

2. There should be no continuity between the No. 1 and No. 2 terminals when the battery is connected to the No. 4 and No. 6 terminals.
   There should be continuity between the No. 1 and No. 2 terminals when the battery is disconnected.

3. There should be battery voltage between the No. 4 (+) and No. 5 (−) terminals with battery positive connected to the No. 4 terminal, connect negative to the No. 6 terminal.

4. There should be continuity between the No. 1 and No. 2 terminals with battery positive connected to the No. 4 and No. 8 terminals, connect negative to the No. 6 terminal.

5. There should be continuity between the No. 3 and No. 7 terminals when the battery is connected to the No. 4 and No. 6 terminals.
   There should be continuity between the No. 7 and No. 8 terminals when the battery is disconnected.

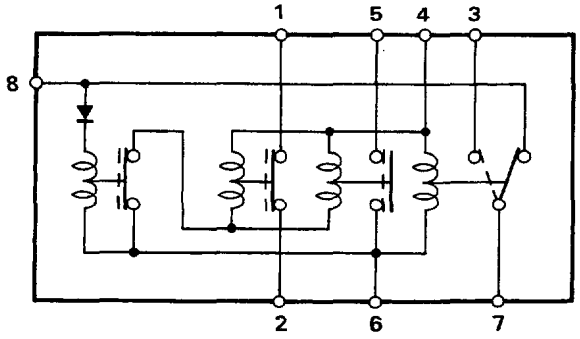

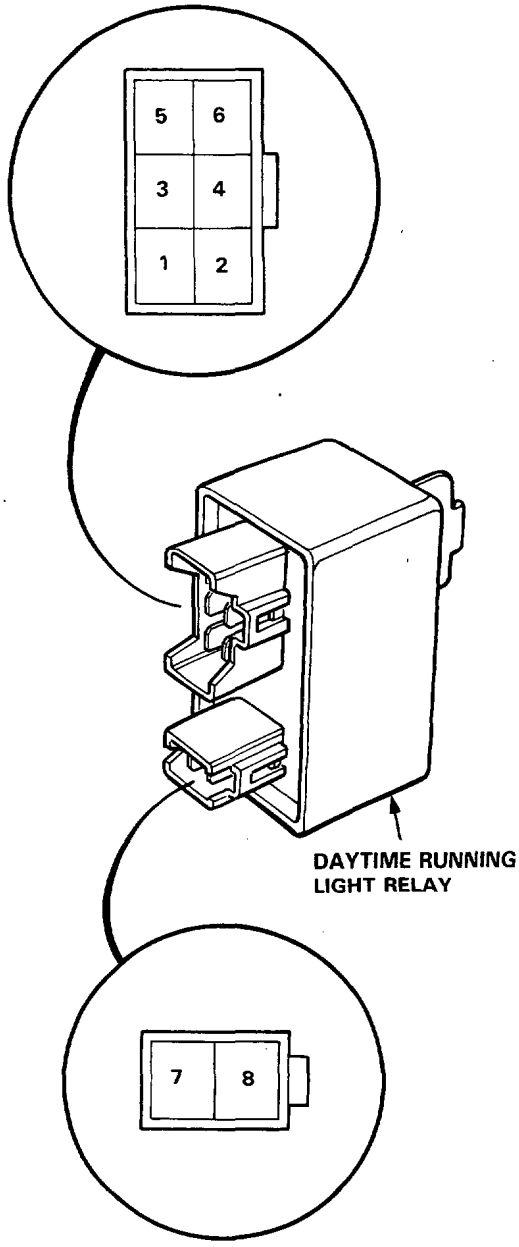

Rear Fog Light Switch Removal

1. Remove the dashboard lower panel.
2. Push the switch from behind the instrument panel, then disconnect the 6-P connector to remove the switch.

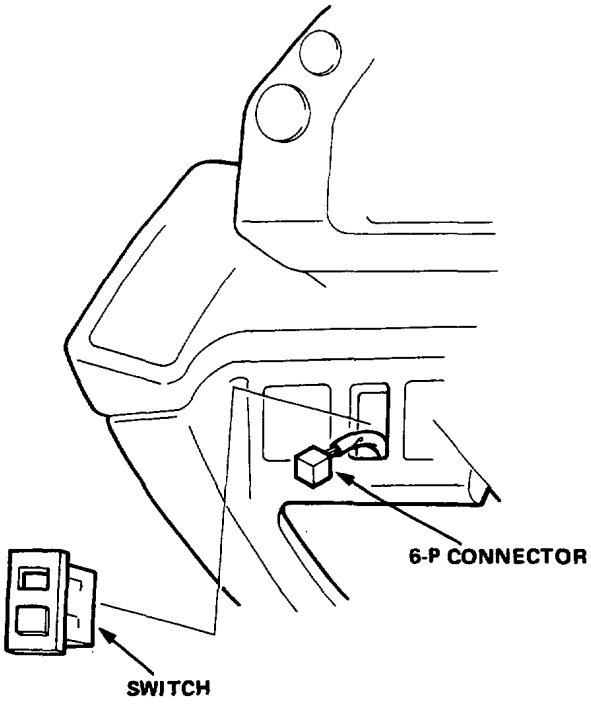

3. Turn the socket 45° counterclockwise to remove it.

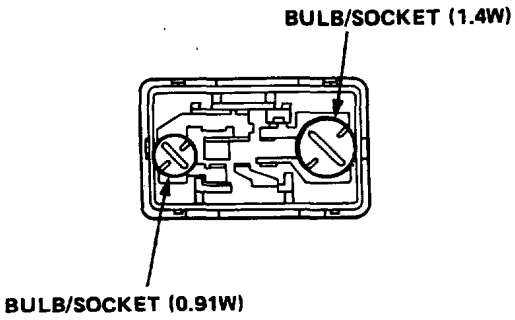

Rear Fog Light Switch Test

1. Remove the rear fog light switch from the instrument panel.
2. Check for continuity between the terminals in each switch position according to the table.

Terminal / Position	A	B		C	B		E
OFF		○	⊖	○	○	⊖	○
ON	○	○	⊖	○	○	⊖	○

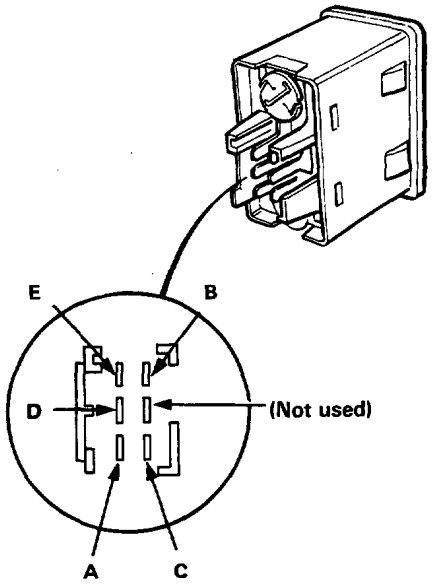

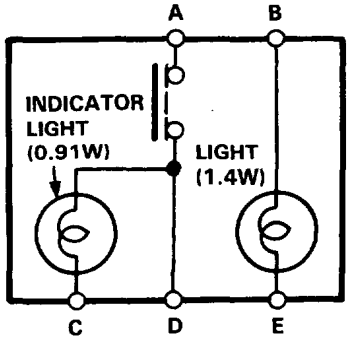

Lighting System

Lighting Relay Test

1. Remove the lighting relay in the under-hood relay box.

2. There should be continuity between the A and B terminals when the battery is connected to the C and D terminals.
   There should be no continuity when the battery is disconnected.

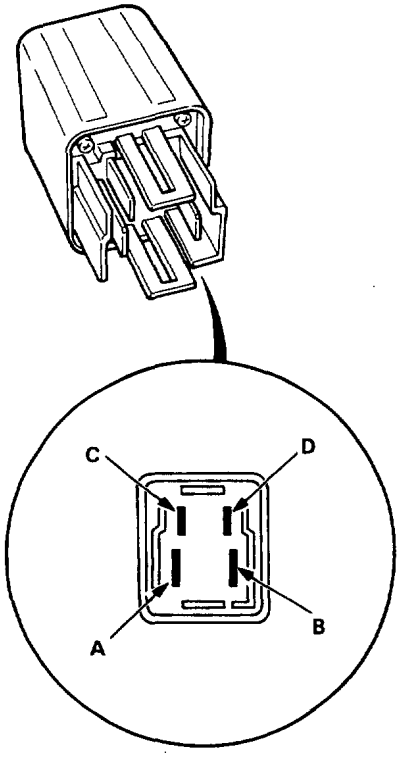

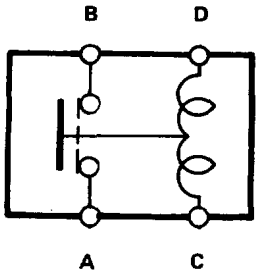

Dimmer Relay Test

1. Remove the dimmer relay in the under-hood relay box.

2. There should be continuity between the A and C terminals when the battery is connected to the E and F terminals.
   There should be continuity between the B and C terminals when the battery is disconnected.

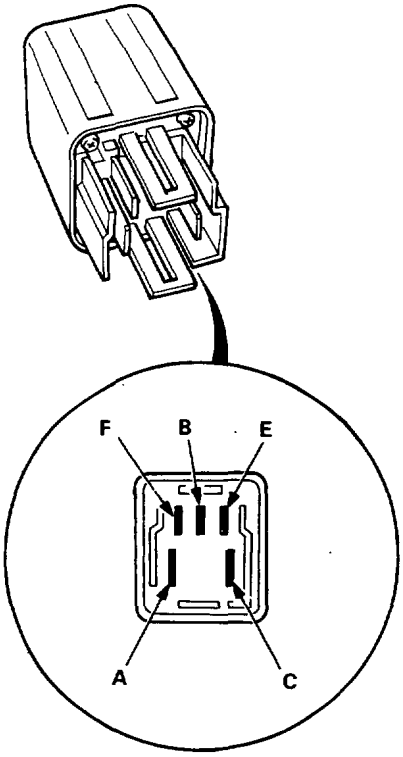

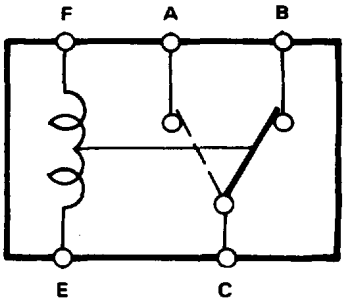

Chassis and Engine Numbers

Vehicle Identification Number

JHMKA31500C100001

Manufacturer, Make and Vehicle Type
JHM: HONDA MOTOR CO., LTD., JAPAN. HONDA, Passenger car

Line/Body and Engine Type
KA3: LEGEND COUPE C27A

Transmission and Body Type
1: 5-Speed Manual 2D Coupe
2: 4-Speed Automatic 2D Coupe

Vehicle Grade

Fixed Code

Auxiliary Number

Plant
C: Saitama Factory Sayama Plant

Model Year
1: 1989

Serial Number

Engine Serial Number (Except KQ)

C27A2-1300001

Engine Type
C27A1: 2.7 ℓ with catalytic converter (KG, KS, KX)
C27A2: 2.7 ℓ without catalytic converter (KE, KF, KB, KW, KY)

Transmission Group
13: 5-Speed manual transmission
14: Automatic transmission

Serial Number

Engine Serial Number (KQ)

C27A1-2700001

Engine Type
C27A1: 2.7 ℓ with catalytic converter

Serial Number

Transmission Number
(Manual Transmission)

G3W4-2000001

Transmission Type
G3E4: KF , KG, KX, KS, KW, KB, KE
G3W4: KY

Serial Number

Transmission Number
(Automatic transmission)

L5-3000001

Transmission Type

Serial Number

Identification Number Locations

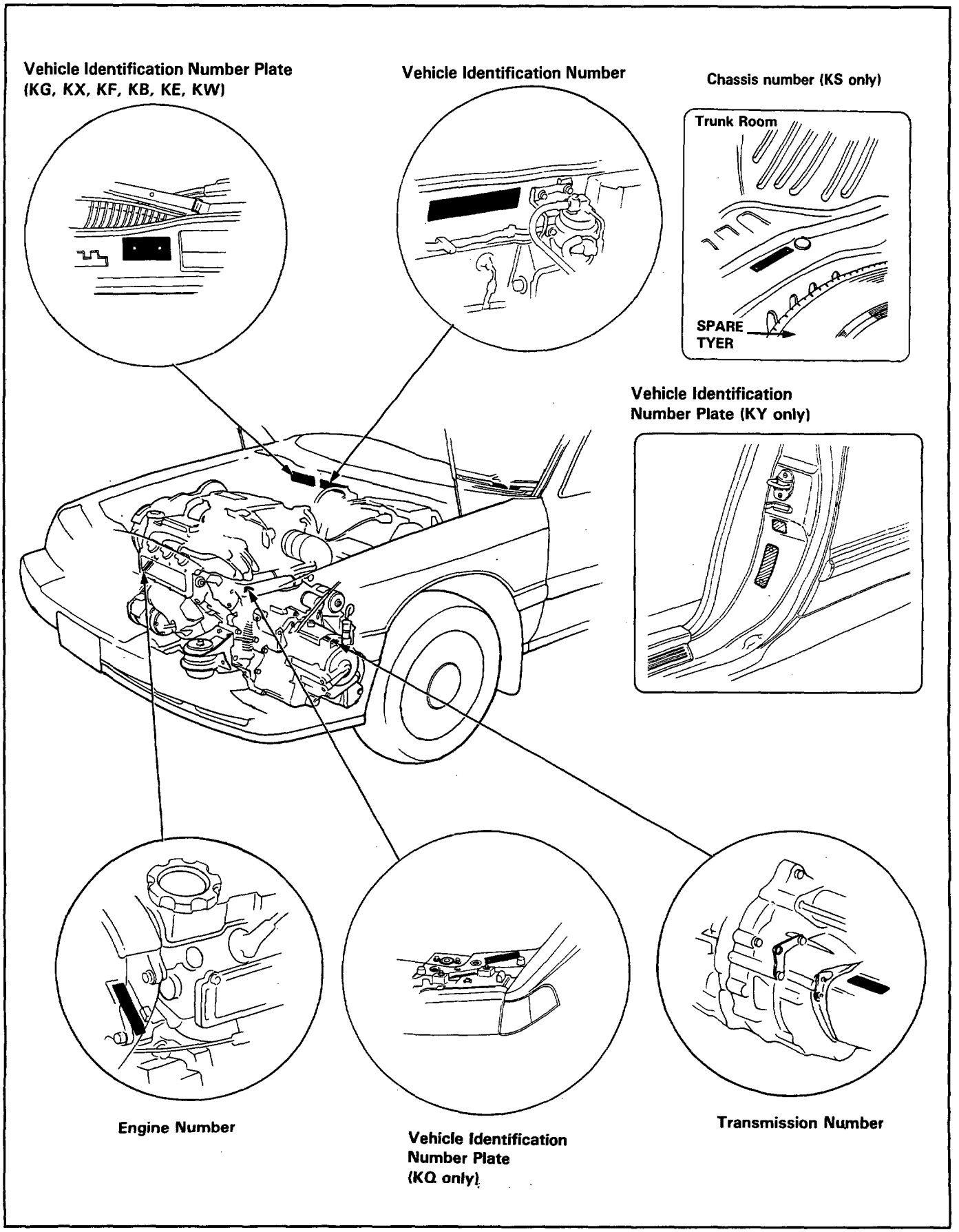

Label Locations

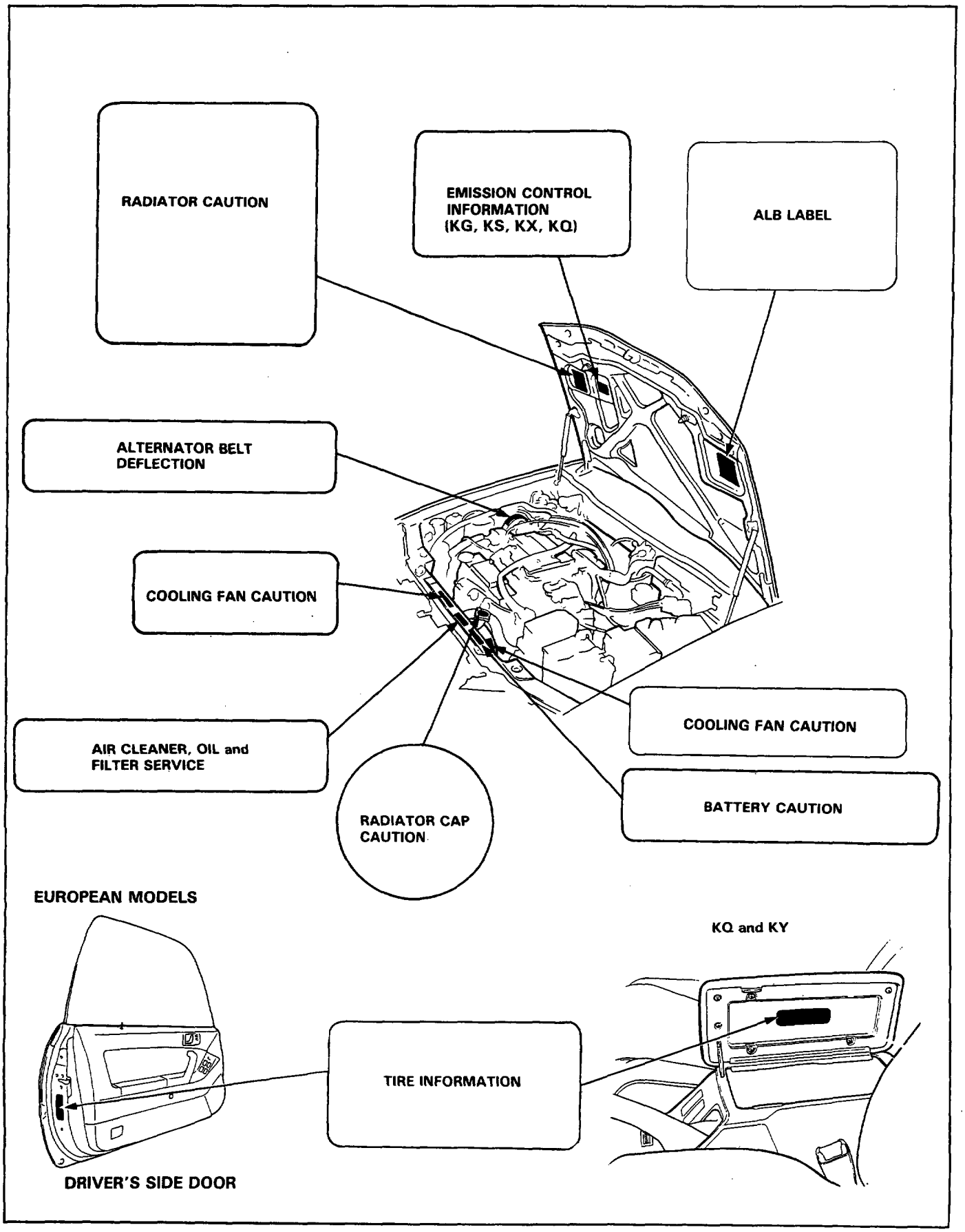

Lift and Support Points

Hoist

1. Place the lift blocks as shown.
2. Raise the hoist a few inches and rock the car to be sure it is firmly supported.
3. Raise the hoist to full height and inspect lift points for solid support.

WARNING **When heavy rear components such as suspension, fuel tank, spare tire and trunk lid/hatch are to be removed, place additional weight in the trunk *before* hoisting. When substantial weight is removed from the rear of the car, the center of gravity may change and can cause the car to tip forward on the hoist.**

NOTE: Since each tire/wheel assembly weighs approximately 14 kg (30 lbs), placing the front wheels in the trunk can assist with the weight transfer.

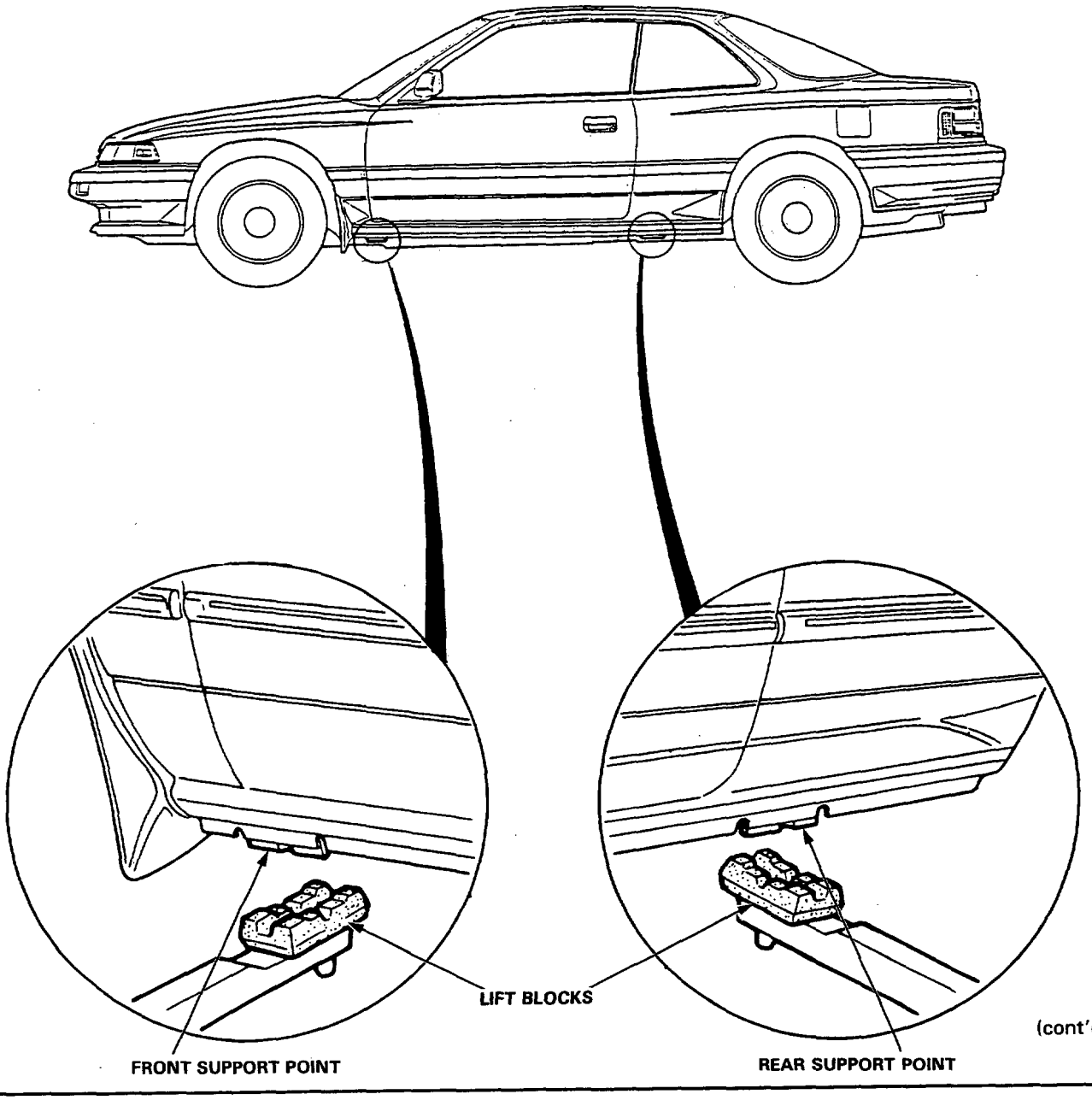

(cont'd)

Lift and Support Points (cont'd)

Floor Jack

1. Set the parking brake and block the wheels that are not being lifted.
2. When lifting the rear of the car, put the gearshift lever in reverse (Automatic in PARK).
3. Raise the car high enough to insert the safety stands.
4. Adjust and place the safety stands as shown on page 1-7 so the car will be approximately level, then lower the car onto them.

WARNING

- **Always use safety stands when working on or under any vehicle that is supported by only a jack.**
- **Never attempt to use a bumper jack for lifting or supporting the car.**

Front

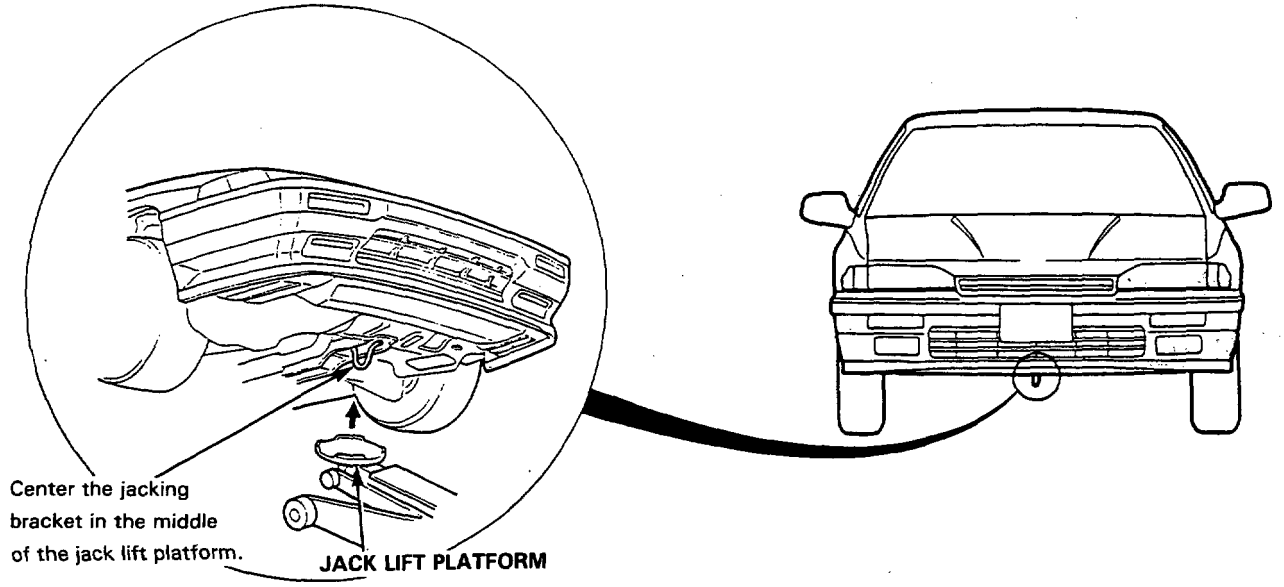

Rear

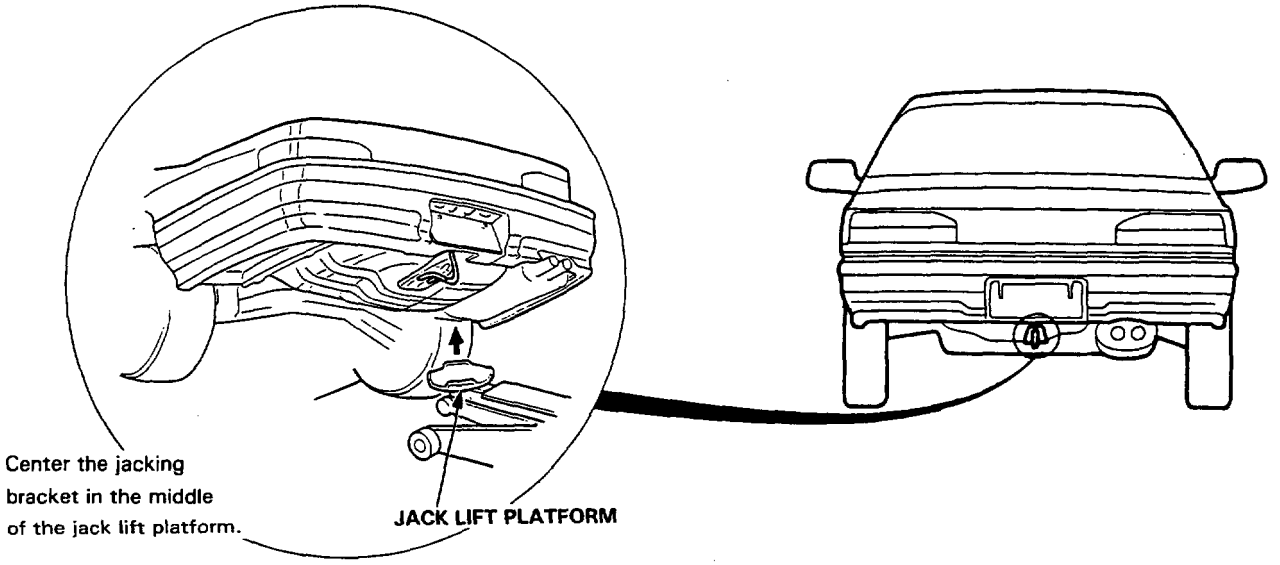

Safety Stands

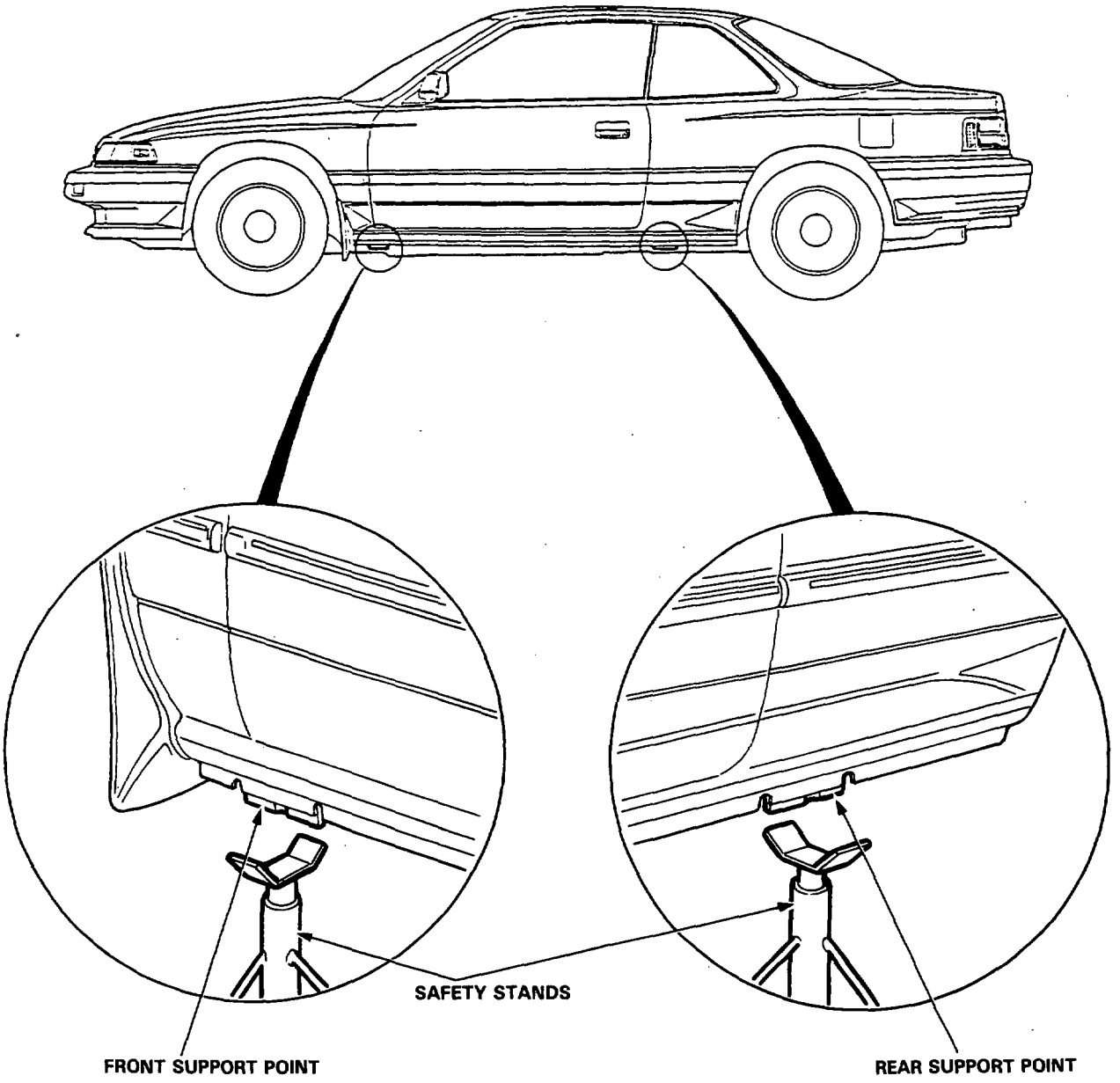

Towing

If possible, always tow the car with the front wheels off the ground. The tow truck driver should position wood spacer blocks between the car's frame and his chains and lift straps to avoid damaging the bumper and the body under it.
Do not use the bumpers to lift the car or to support the car's weight while towing. Check local regulations for towing with a rope or tow bar. A rope may be attached to the hook as shown in the illustration.
Do not attach a tow bar to either bumper.

If the car is to be towed with the front wheels on the ground, observe the following precautions:

1. Wheels and axles must not be touching the body or frame.
2. Turn the ignition key to the "I" position and make sure the steering wheel turns freely.
3. Shift the transmission to NEUTRAL.
4. Release the parking brake.
5. DO NOT exceed 55 km/h (35 mph) or tow for distances of more than 80 km (50 miles).

WARNING DO NOT push or tow a car to start it. The forward surge when the engine starts could cause a collision. Also, under some conditions, the catalytic converter (on some types) could be damaged. A car equipped with automatic transmission gearbox cannot be started by pushing or towing.

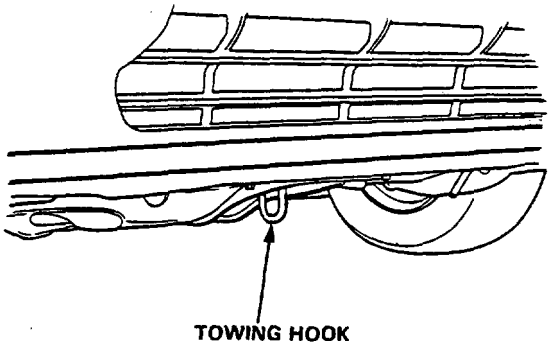

Special Caution Items For This Car

1. The engine hood opens almost vertical during installation or removal of the engine or transmission for easy operation.
   - Remove the wiper blade.
   - Fix the engine hood in the vertical position by removing the open stay mounting bolt on the hood side and fitting it to the mounting hole nearer to the hinge.

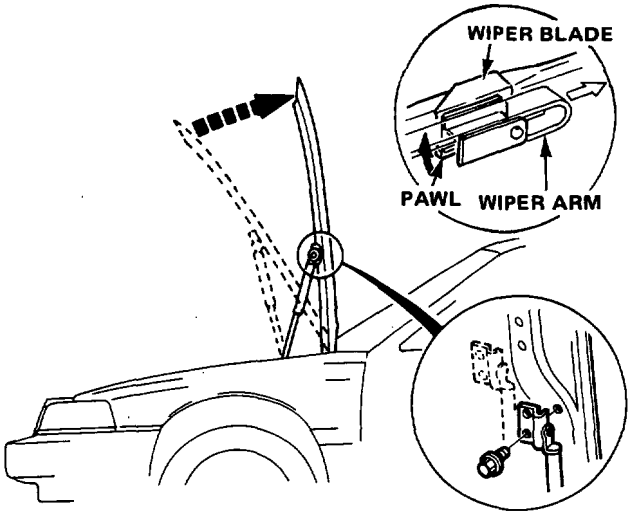

2. ALB piping system servicing
   - Disassemble the ALB piping system after relieving the high-pressured brake fluid.
   - Otherwise, the high-pressured brake fluid will burst out and it is very dangerous.
   - See section 13 how to relieve the high-pressured brake fluid.

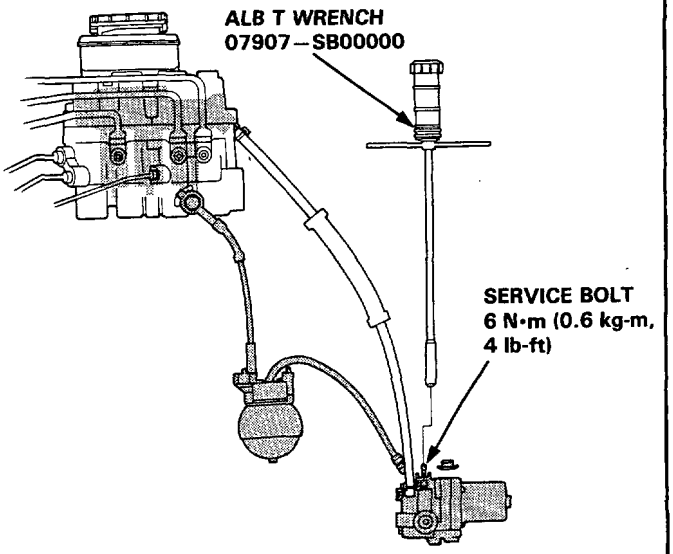

3. Fuel Line Servicing
   - Relieve fuel pressure by loosening the service bolt provided on the top of the fuel filter before disconnecting a fuel hose or a fuel pipe.

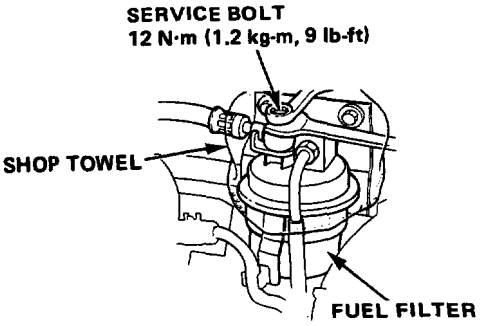

   - Be sure to replace washers, O-rings, and rubber seal with new ones when servicing fuel line parts.
   - Always apply oil to the surfaces of O-rings and seal rings before installation. Never use brake fluid, radiator fluid, vegetable oils or alcohol-based oils.

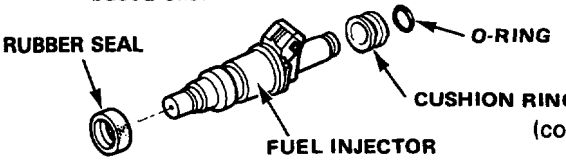

(cont'd)

- When assembling the flare joint of the high-pressure fuel line, clean the joint and coat with new engine oil.
- When installing an injector, check the angle of the coupler. The center line of the coupler should align with the setting mark on the injector holder.

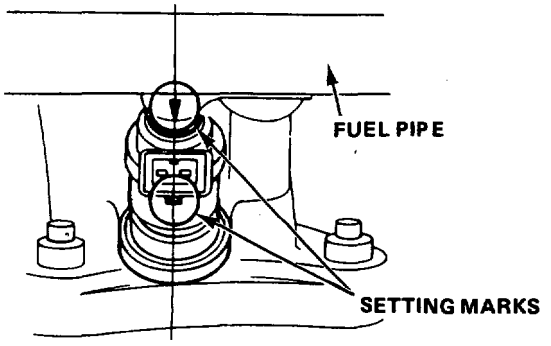

4. Inspection for fuel leakage
   - After assembling fuel line parts, turn ON the ignition switch (do not operate the starter) so that the fuel pump is operated for approximately two seconds and the fuel is pressurized. Repeat this operation two or three times and check whether any fuel leakage has occurred in any of the various points in the fuel line.

5. Installation of an amateur radio for cars equipped with PGM-FI, A/T CONTROL, CRUISE CONTROL and ALB.
   Care has been taken for the PGM-FI, A/T CONTROL, CRUISE CONTROL and ALB control units and its wiring to prevent erroneous operation from external interference, but erroneous operation of the control unit may be caused by entry of extremely strong radio waves. Attention must be paid to the following items to prevent erroneous operation of the control unit.
   - The antenna and the body of the radio must be at least 200 mm (7.9 in.) away from the control unit.

   The control unit locations
   - PGM-FI control unit: Under the dashboard, passenger's side
   - A/T CONTROL unit: Under the right side seat
   - CRUISE CONTROL unit: Under the dashboard, driver's side
   - ALB control unit: Behind the rear seat
   - Do not lead the antenna feeder and the coaxial cable over a long distance parallel to the wiring, and when crossing with the wiring is required, execute crossing at a right angle.
   - Do not install a radio with a large output (max. 10 W).

6. Apply liquid gasket to the transmission, oil pump cover, left side cover and water outlet. Use HONDA genuine liquid gasket, PARTS NO. OY740–99986.
   - Check that the mating surfaces are clean and dry before applying liquid gasket. Degrease the mating surfaces if necessary.
   - Apply liquid gasket evenly, being careful to cover all the mating surface.
   - To prevent leakage of oil, apply liquid gasket to the inner threads of the bolt holes.
   - Do not install the parts if 20 minutes or more have passed after applying liquid gasket. In that case, reapply liquid gasket after removing old one.
   - Wait at least 30 minutes before filling with the appropriate liquid (engine oil, coolant and other similar fluids).

7. Since a V-type 6-cylinder engine is used, carefully prevent removed bolts, nuts and washers from falling into the valley between V-type cylinders around the intake manifold during maintenance.
   - Putting shop towel in the gap in the V-bank vallery is recommended to prevent dropping.

8. The oil filter case is removed from the engine block during engine removal and installation. If foreign matter enters the oil path, the lubrication system may clog. Be sure to fit a blind plug to the oil hole.

9. The layout of the engine and transmission is the reverse of that of conventional Honda cars. The engine is mounted on the right side, and the transmission on the left. The direction of engine revolution, therefore, is reversed. It is clockwise as viewed from the timing belt pulley.
   - After timing belt adjustment, always rotate the engine clockwise as viewed from the pulley side.

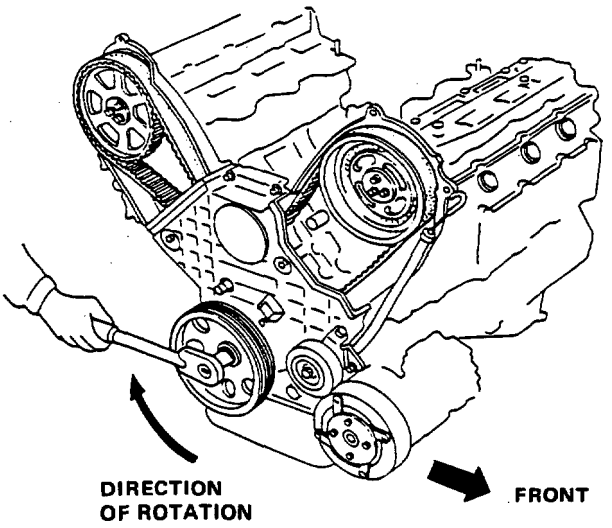

10. Cylinder Nos. are No. 1, No. 2 and No. 3 from the timing belt side of the rear bank cylinders, and No. 4, No. 5 and No. 6 from the timing belt side of the front bank cylinders.

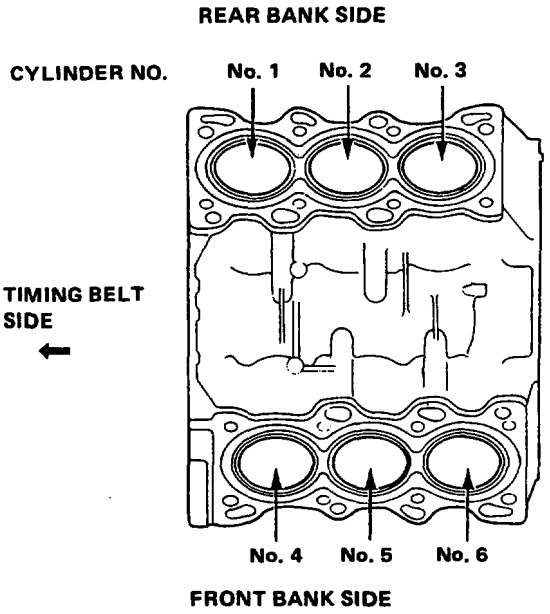

11. The hydraulic tappet has been adopted to eliminate the need for valve clearance adjustment. After disassembling the valve, head and cylinder or after maintenance of the valve train, always carry out the following operations:
    - Bleed the air from the chamber when inspecting the hydraulic tappet.
    - Clean each oil path in the engine. Use an air nozzle to eliminate any clogging with dirt, etc.
    - Before installing the camshaft bearing caps, fill the oil path in the hydraulic tappet with engine oil from the oil filler on the cylinder head.
    - After installing the camshaft, properly adjust the exhaust rocker arm adjusting screw.

CAUTION: Observe all safety precautions and notes while working.

1. Protect all painted surfaces and seats against dirt and scratches with a clean cloth or vinyl cover.

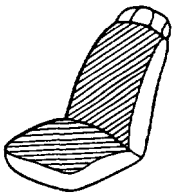

2. Work safely and give your work your undivided attention. When either the front or rear wheels are to be raised, block the remaining wheels securely. Communicate at frequently as possible when work involves two or more workers. Do not run the engine unless the shop or working area is well ventilated.

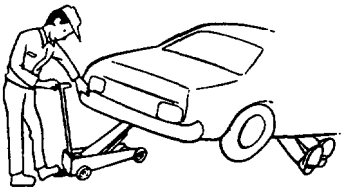

3. Prior to removing or disassembling parts, they must be inspected carefully to isolate the cause for which service is necessary. Observe all safety notes and precautions and follow the proper procedures as described in this manual.

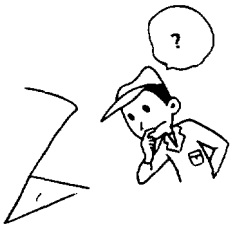

4. Mark or place all removed parts in order in a parts rack so they can be reassembled in their original places.

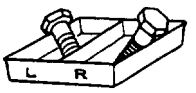

(cont'd)

Preparation of Work

(cont'd)

5. Use the special tool when use of such a tool is specified.

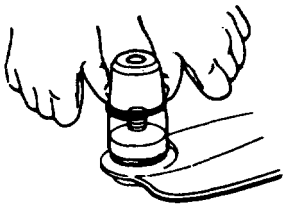

6. Parts must be assembled with the proper torque according to the maintenance standards established.

7. When tightening a series of bolts or nuts, begin with the center or large diameter bolts and tighten them in crisscross pattern in two or more steps.

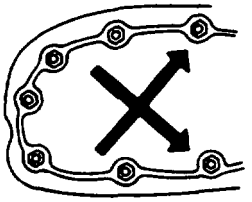

8. Use new packings, gaskets, O-rings and cotter pins whenever reassembling.

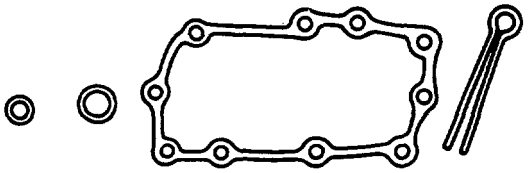

9. Use genuine HONDA parts and lubricants or those equivalent. When parts are to be reused, they must be inspected carefully to make sure they are not damaged or deteriorated and are in good usable condition.

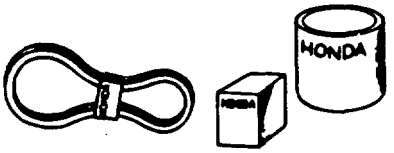

10. Coat or fill parts with specified grease as specified (page 4-2). Clean all removed parts with solvent upon disassembly.

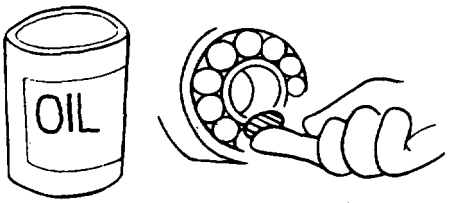

11. Brake fluid and hydraulic components
    - When replenishing the system, use extreme care to prevent dust and dirt from entering the system.
    - Do not mix different brands of fluid as they may not be compatible.
    - Do not reuse drained brake fluid.
    - Brake fluid can cause damage to painted surfaces. Wipe up spilled fluid at once.
    - After disconnecting brake hoses or pipes, be sure to plug the openings to prevent loss of brake fluid.
    - Clean all disassembled parts only in clean Blow open all holes and passages with compressed air.

    - Keep disassembled parts from air-borne dust and abrasives.
    - Check that parts are clean before assembly.

12. Avoid oil or grease getting on rubber parts and tubes, unless specified.

13. Upon assembling, check every part for proper installation and operation.

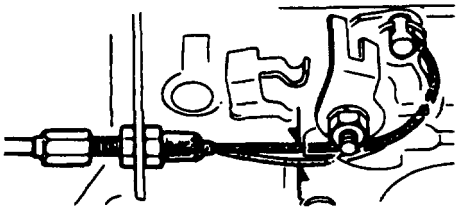

- Before making any repairs on electric wires or parts, disconnect the battery cables from the battery starting with the negative (−) terminal.

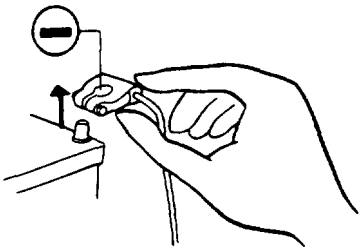

- After making repairs, check each wire or part for proper routing and installation. Also check to see that they are connected properly.
- Always connect the battery positive (+) cable first, then connect the negative (−) cable.

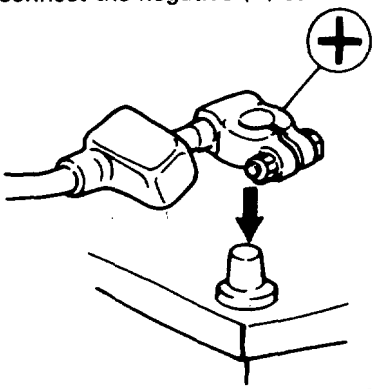

- Coat the terminals with clean grease after connecting the battery cables.
- Don't forget to install the terminal cover over the positive battery terminal after connecting.
- Before installing a new fuse, isolate the cause and take corrective measures, particularly when frequent fuse failure occurs.

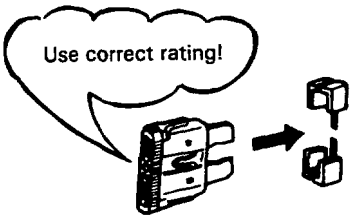

- Be sure to install the terminal cover over the connections after a wire or wire harness has been connected.

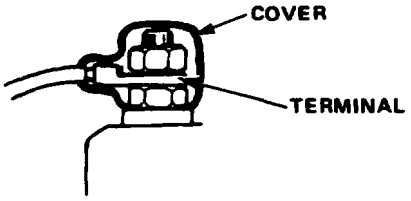

- When removing locking couplers, be sure to disengage the lock before disconnecting.
- Couplers may be of two types, those in which the lock is pressed to remove, and those in which the lock is pulled up to remove. Be sure to ascertain the type of locking device before beginning work. The following is a depiction of the means of disconnecting various typical couplers.

Press to disengage:

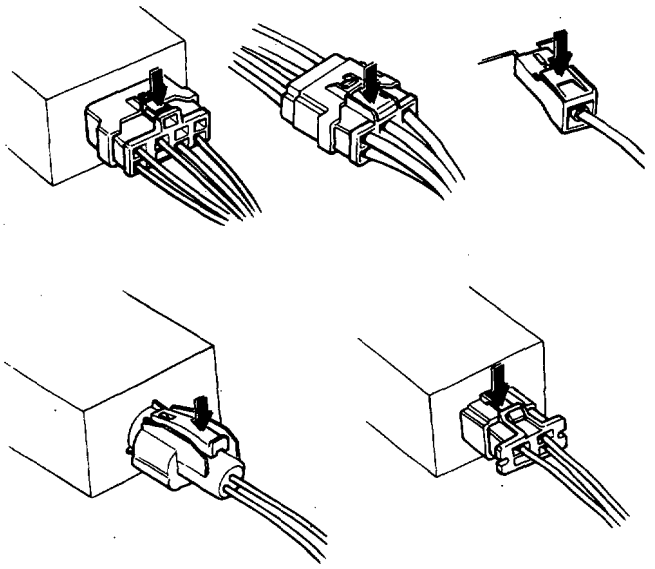

Pull up to disengage:

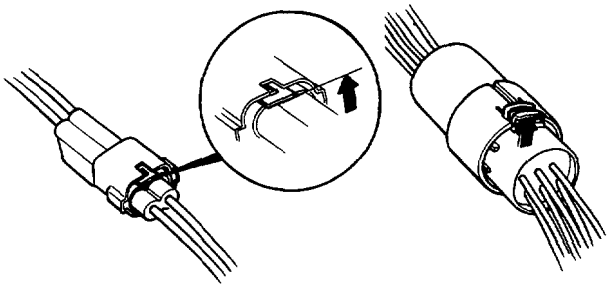

- When disconnecting locks, first press in the coupler tightly (to provide clearance to the locking device), then operated the tab fully and remove the coupler in the designated manner.

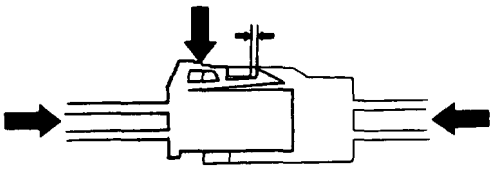

(cont'd)

Electrical (cont'd)

- When disconnecting a coupler, pull it off from the mating coupler by holding on both couplers.
- Never try to disconnect couplers by pulling on their wires.

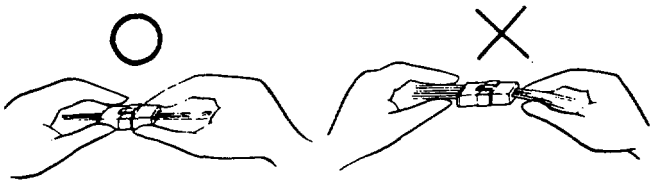

- Before connecting couplers, check to see that the terminals are in place and are not bent or distorted.

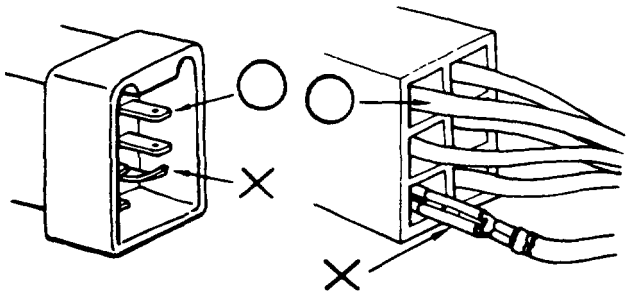

- Insert couplers fully until they will no longer go.
- Some couplers have locking tabs that must be aligned and engaged securely.
- Don't use wire harnesses with a loose wire or coupler.

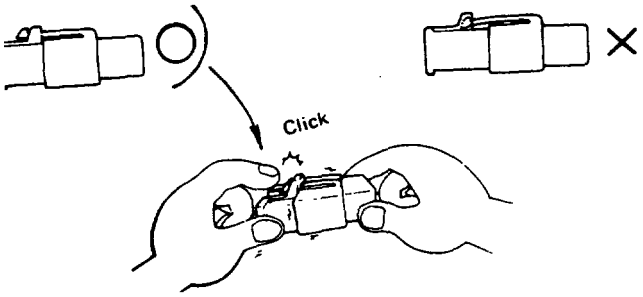

- Place the plastic cover over the mating coupler after reconnecting. Also check that the cover is not distorted.

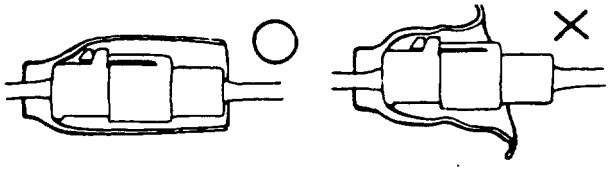

- Before connecting, check each connector cover for damage. Also make sure that the female connector is tight and not loosened from the previous use.

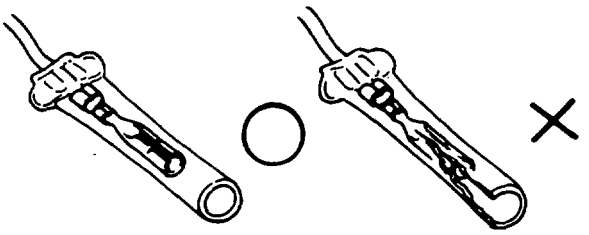

- Insert male connectors into the female connectors fully until they will no longer go.
- Be sure that plastic cover is placed over the connection.
- Position the wires so that the open end of the cover is not facing upward.

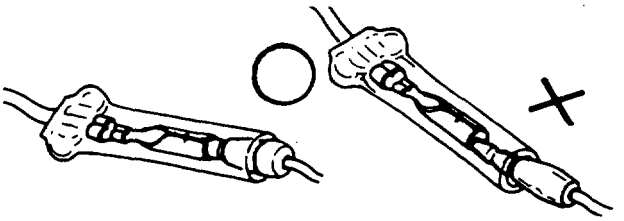

- Secure wires and wire harnesses to the frame with their respective wire bands at the designated locations. Position the wiring in the bands so that only the insulated surfaces contact the wires or wire harnesses.

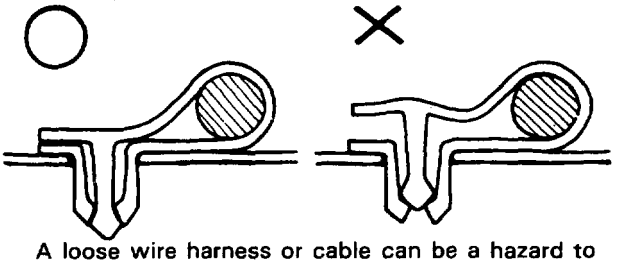

- A loose wire harness or cable can be a hazard to safety. After clamping, check each wire for security in its clamp.

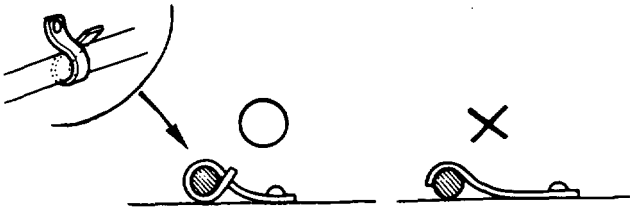

- Do not squeeze wires against the weld when a weld-on clamp is used.

- After clamping, check each harness to be certain that it is not interferring with any moving or sliding parts of the vehicle.
- Keep wire harnesses away from the exhaust pipes and other hot parts.

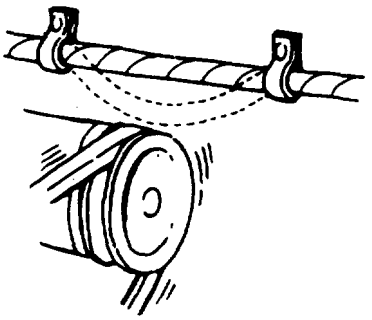

- Always keep a safe distance between wire harnesses and any heated parts.

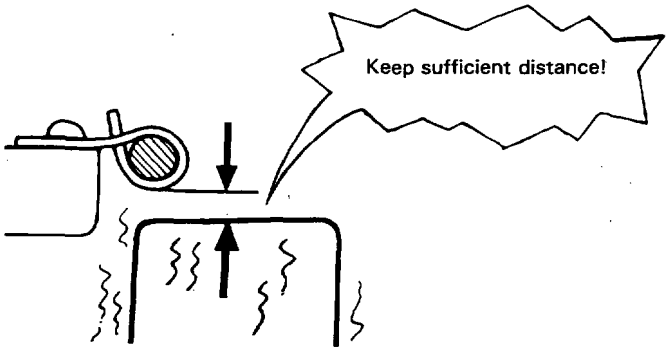

- Do not bring wire harnesses in direct contact with sharp edges or corners.
- Also avoid contact with the projected ends of bolts, screws and other fasteners.

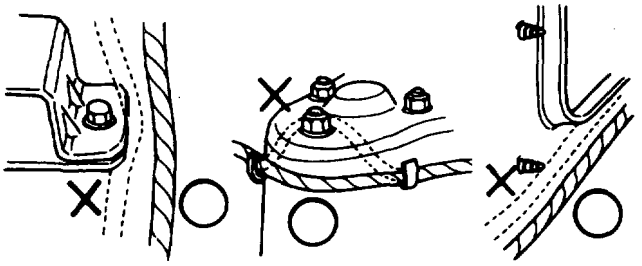

- Route harnesses so they are not pulled taut or slackened excessively.

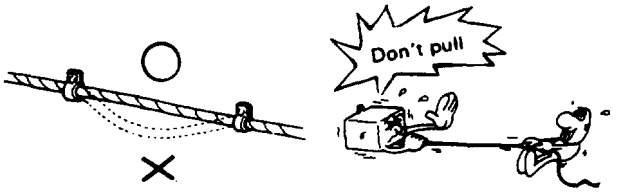

- Protect wires and harnesses with a tape or a tube if they are in contact with a sharp edge or corner.

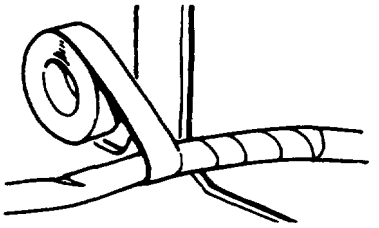

- Clean the attaching surface thoroughly if an adhesive is used. First, wipe with solvent or alcohol if necessary.

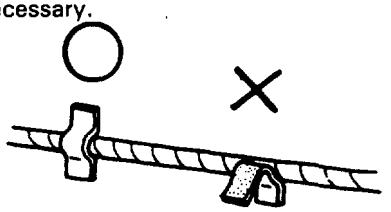

- Seat grommets in their grooves properly.

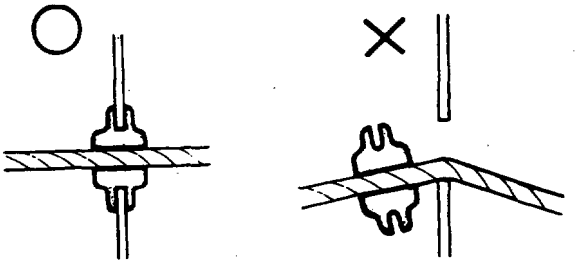

- Do not damage the insulation when connecting a wire.
- Do not use wires or harnesses with a broken insulation. Repair by wrapping with protective tape or replace with new ones if necessary.

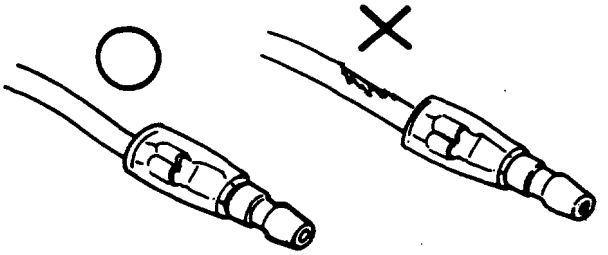

- After installing parts, make sure that wire harnesses are not pinched.

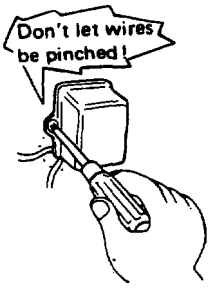

(cont'd)

Electrical (cont'd)

- After routing, check that the wire harnesses are not twisted or kinked.

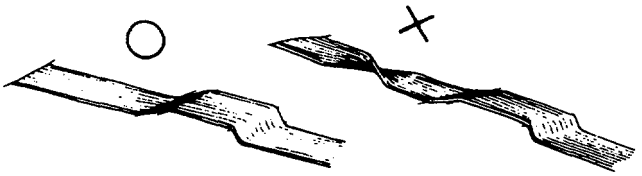

- Wire harnesses should be routed so that they are not pulled taut, slackened excessively, pinched, or interfering with adjacent or surrounding parts in all steering positions.

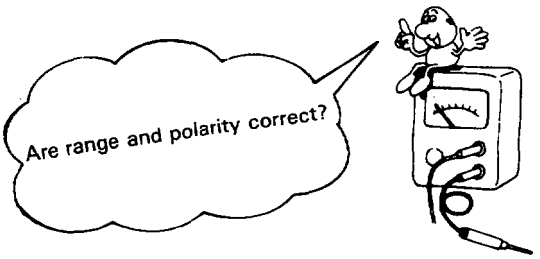

- When using the Service Tester, follow the manufacturer's instructions and those described in the Shop Manual.

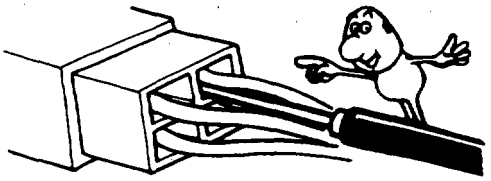

- Do not drop parts.

- Rust is the enemy of all finished surfaces. Before connecting connectors and couplers, check the terminals and remove, if any, rust using a fine sand paper or emery cloth.

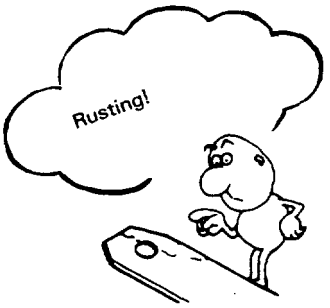

Symbol Marks

The following symbols stand for:

:Apply engine oil.

:Apply brake fluid.

:Apply grease.

:Apply Automatic Transmission Fluid.

:Apply Power Steering Fluid.

①, ②, ③,----- ❶, ❷, ❸,----- : Sequence of removal or installation.

Electrical (cont'd)

- After routing, check that the wire harnesses are not twisted or kinked.

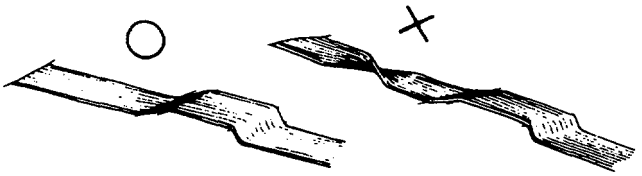

- Wire harnesses should be routed so that they are not pulled taut, slackened excessively, pinched, or interfering with adjacent or surrounding parts in all steering positions.

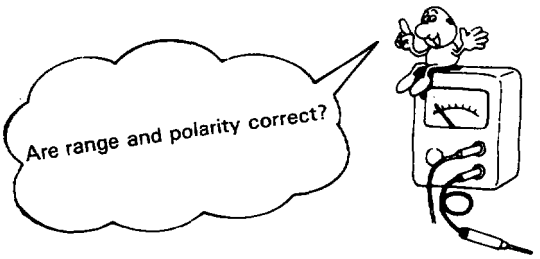

- When using the Service Tester, follow the manufacturer's instructions and those described in the Shop Manual.

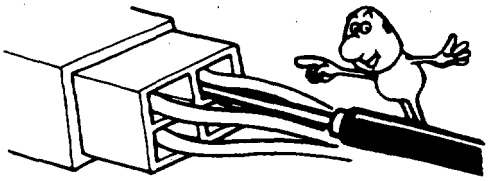

- Do not drop parts.

- Rust is the enemy of all finished surfaces. Before connecting connectors and couplers, check the terminals and remove, if any, rust using a fine sand paper or emery cloth.

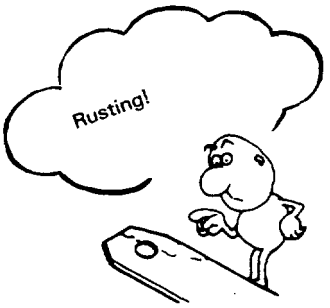

Symbol Marks

The following symbols stand for:

:Apply engine oil.

:Apply brake fluid.

:Apply grease.

:Apply Automatic Transmission Fluid.

:Apply Power Steering Fluid.

①, ②, ③,----- ❶, ❷, ❸,----- : Sequence of removal or installation.

Abbreviations

A/C	Air Conditioner
ALB	Anti Lock Brake
A/T	Automatic Transmission
ATF	Automatic Transmission Fluid
BAT	Battery
CATA	Catalytic Converter
EACV	Electronic Air Control Valve
ECU	Electronic Control Unit
EGR	Exhaust Gas Recirculation
EACV	Electronic Air Control Valve
EX	Exhaust
GND	Ground
IG	Ignition
IN	Intake
INT	Intermittent
L.	Left
LHD	Left Hand Drive
M/T	Manual Transmission
PCV VALVE	Positive Crankcase Ventilation Valve
PGM-FI	Programmed Fuel-Injection
P/S	Power Steering
R.	Right
RHD	Right Hand Drive
SOL. V	Solenoid Valve
SW	Switch
TA	Intake Air Temperature
TDC	Top Dead Center
TW	Coolant Temperature
P	Packing Position
R	Reverse Position
N	Neutral Position
D	Drive Position
S	Sport Position
2	Fixed at 2nd Range

Special Tools

5. Engine

Number	Tool Number	Description	Q'ty	Remarks
①	07GAD—PH70200	Oil Seal Driver	1	
②	07GAF—PH60300	Piston Pin Base Insert	1	
③	07GAF—PH70100	Pilot Collar	1	
④	07HAF—PL20101	Piston Base Head	1	
⑤	07JAB—0010000	Crank Pulley Holder Set	1	For crankshaft pulley bolt.
⑤-1	07JAA—0010200	Socket Wrench, 19 mm	(1)	Component Tools For automatic transmission.
⑤-2	07JAB—0010100	Pulley Holder Attachment	(1)	
⑤-3	07JAB—0010200	Handle	(1)	
⑥	07JAB—0010300	Pulley Holder Attachment, Hex 45 mm	1	For manual transmission.
⑦	07406—0030000	Oil Pressure Gauge Adaptor	1	
⑧	07743—0020000	Valve Guide Driver	1	
⑨	07746—0030100	Driver	1	
⑩	07749—0010000	Driver	1	07949—6110000 may also be used.
⑪	07757—0010000	Valve Spring Compressor	1	07957—3290001 may also be used.
⑫	07912—6110001	Oil Filter Socket	1	
⑬	07924—PD20003	Ring Gear Holder	1	
⑭	07925—6570000	Pulley Holder	1	Camshaft Pulley
⑮	07942—6110000	Valve Guide Driver/Remover	1	
⑯	07944—6110200	Pin Driver, 8.0 mm	1	
⑰	07947—SB00200	Oil Seal Driver	1	Crankshaft Oil Seal (Oil Pump)
⑱	07948—SB00101	Seal Driver Attachment	1	Crankshaft Oil Seal (Clutch side)
⑲	07966—6340011	Engine Block Hanger	1	
⑳	07973—6570002	Piston Pin Dis/Assembly Tool Set	1	
⑳-1	07973—6570500	Piston Base	(1)	Component Tools
⑳-2	07973—6570600	Piston Base Spring	(1)	

6. Fuel and Emission

Number	Tool Number	Description	Q'ty	Remarks
①	07GAC—SE00200	Fuel Sender Wrench	1	
②	07GAZ—SE00300	R.P.M. Connecting Adaptor	1	
③	07GMJ—ML80100	Test Harness	1	
④	07406—0040001	Fuel Pressure Gauge	1	
④-1	07406—0040100	Pressure Gauge	(1)	Component Tools
④-2	07406—0040201	Hose Assy	(1)	
⑤	07411—0020000	Digital Circuit Tester	1	
⑥	07999—PD6000A	PGM-FI Test Harness	1	

7. Clutch

Number	Tool Number	Description	Q'ty	Remarks
①	07GAG—PF50100	Clutch Disc Alignment Tool	1	
②	07924—PD20003	Ring Gear Holder	1	

8. Manual Transmission

Number	Tool Number	Description	Q'ty	Remarks
①	07GAD–PG20100	Pin Driver, 5.0 mm	1	
②	07GAD–PG40100	Oil Seal Driver	1	
③	07GAJ–PG20101	Mainshaft Thrust Clearance Inspection Tool	1	
④	07GAJ–PG20200	Preload Inspection Tool	1	
⑤	07744–0010400	Pin Driver, 5.0 mm	1	07944–6110100 may also be used.
⑥	07746–0010300	Attachment, 42 x 47 mm	1	
⑦	07746–0010500	Attachment, 62 x 68 mm	1	07947–6340200 may also be used.
⑧	07746–0030100	Driver	1	
⑨	07749–0010000	Driver	1	07949–6110000 may also be used.
⑩	07936–6340000	Bearing Remover Set	1	
⑪	07936–6890101	Bearing Puller Attachment	1	Use changed to 07936–6340000 attachment.
⑫	07979–PJ40000	Mainshaft Stand Base	1	

9. Automatic Transmission

Number	Tool Number	Description	Q'ty	Remarks
①	07GAB–PF50100	Mainshaft Holder	1	
②	07GAC–PF40210	Bearing Remover Attachment	1	Use changed to 07936–6340000 attachment.
③	07GAC–PG40101	Housing Puller	1	07HAC–PK40100 may also be used.
④	07GAD–PG20100	Pin Driver, 5.0 mm	1	
⑤	07GAD–PG40100	Oil Seal Driver	1	
⑥	07GAE–PG40001	Clutch Spring Compressor Set	1	
⑦	07GAE–PG40200	Compressor Bolt Assembly	1	
⑧	07HAE–PL50100	Compressor Attachment	1	
⑨	07HAF–PL50100	Gear Installer	1	
⑩	07406–0020003	Oil Pressure Gauge Set	1	
⑪	07406–0020201	Oil Pressure Gauge Hose	(3)	Component Tool
⑪-1	07746–0010500	Attachment, 62 x 68 mm	1	
⑫	07746–0030100	Driver	1	
⑬	07749–0010000	Driver	1	07949–6110000 may also be used.
⑭	07936–6340000	Bearing/Transmission Case Puller	1	
⑮	07947–6340201	Driver Attachment, E	1	
⑯	07947–6340500	Driver Attachment, E	1	
⑰	07960–6120100	Compressor Attachment	1	

10. Driveshafts

Number	Tool Number	Description	Q'ty	Remarks
①	07746–0010400	Attachment, 52 x 55 mm	1	
②	07746–0010500	Attachment, 62 x 68 mm	1	
③	07746–0040900	Pilot, 40 mm	1	
④	07749–0010000	Driver	1	
⑤	07947–SD90200	Oil Seal Driver	1	
⑥	07947–6340201	Attachment	1	
⑦	07965–SD90100	Support Base	1	
⑧	07965–SD90200	Support Collar	1	

Special Tools

11. Power Steering

Number	Tool Number	Description	Q'ty	Remarks
①	07GAG–SD40000	P/S Tool Kit	1	
①-1	07GAG–SD40100	Piston Seal Ring Guide	(1)	Component Tools
①-2	07GAG–SD40200	Piston Seal Sizing Tool	(1)	
①-3	07GAG–SD40300	Cylinder End Seal Slider	(1)	
①-4	07GAG–SD40400	End Seal Guide	(1)	
①-5	07GAG–SD40600	P/S Tool Kit Case	(1)	
②	07GAK–SE00100	P/S Joint Adaptor Kit	1	
②-1	07GAK–SE00110	P/S Joint Adaptor (Pump)	(1)	Component Tools
②-2	07GAK–SE00120	P/S Joint Adaptor (Hose)	(1)	
③	07KAA–SD40100	Locknut Wrench, 40 mm	1	
④	07406–0010101	Bypass Tube Joint	1	
⑤	07406–0010200	P/S Pressure Gauge Assembly	1	
⑤-1	07406–0010300	Pressure Control Valve	(1)	Component Tools
⑤-2	07406–0010400	Pressure Gauge	(1)	
⑥	07725–0030000	Universal Holder	1	07725–0010101 may also be used.
⑦	07746–0010300	Attachment, 42 x 47 mm	1	
⑧	07749–0010000	Driver	1	07949–6110000 may also be used.
⑨	07941–6920003	Ball Joint Remover	1	
⑩	07944–6110200	Pin Driver, 8 mm	1	07941–6920002 may also be used.
⑪	07947–6340300	Driver Attachment	1	
⑫	07953–7190000	Collar Driver	1	
⑬	07974–SA50600	Pinion Seal Guide	1	
⑭	07974–SA50800	Ball Joint Boot Clip Installation Guide	1	

12. Suspension

Number	Tool Number	Description	Q'ty	Remarks
①	07GAC–SE00100	Ball Joint Remover	1	
②	07GAE–SE00101	Shock Absorber Spring Compressor	1	07GAE–SE00100 may also be used.
③	07GAF–SE00401	Front Hub Base	1	
④	07GAF–SD40100	Hub Assembly Pin	1	
⑤	07GAF–SD40200	Hub Assembly Driver Attachment	1	
⑥	07GAF–SD40300	Ball Joint Disassembly Tool Kit	1	
⑥-1	07GAF–SD40310	Ball Joint Remover Base	(1)	Component Tools
⑥-2	07GAF–SD40320	Ball Joint Installer Base	(1)	
⑥-3	07GAF–SD40330	Ball Joint Remover/Installer	(1)	
⑦	07GAF–SD40700	Hub Dis/Assembly Base	1	
⑧	07GAG–SD40700	Ball Joint Boot Clip Installation Guide	1	
⑨	07HAD–SG00100	Bearing Driver Attachment	1	
⑩	07HGK–0010200	Wheel Alignment Gauge Attachment	1	
⑪	07746–0010500	Attachment, 62 x 68 mm	2	When servicing rear axle, 2 tools are required.
⑫	07749–0010000	Driver	1	07949–6110000 may also be used.
⑬	07941–6920003	Ball Joint Remover	1	07941–6920002 may also be used.
⑭	07965–6920201	Hub Dis/Assembly Tool B	1	
⑮	07974–SA50800	Ball Joint Boot Clip Installation Guide B	1	

13. Brakes

Number	Tool Number	Description	Q'ty	Remarks
①	07GAJ–SD40100	Brake Booster Rod Adjustment Gauge	1	
②	07HAE–SG00100	Brake Spring Compressor	1	
③	07HAJ–SG00300	ALB Checker Adaptor	1	
④	07HAK–SG00110	Pressure Gauge Joint Pipe	2	
④-1	07510–6340100	Pressure Gauge Joint Pipe	(1)	ø10 mm ┐ Component Tools
④-2	07HAK–SG00100	Pressure Gauge Joint Pipe	(1)	ø12 mm ┘
⑤	07404–5790300	Vacuum Gauge	1	
⑥	07406–5790200	Pressure Gauge	2	
⑦	07410–5790100	Pressure Gauge Attachment	2	
⑧	07410–5790500	Tube Joint Adapter	1	
⑨	07508–SB00000	ALB Checker	1	
⑩	07510–6340300	Vacuum Joint Tube, A	1	
⑪	07907–SB00000	ALB T-Wrench	1	
⑫	07914–SA50001	Snap Ring Pliers	1	
⑬	07921–0010100	Flare Nut Wrench	1	

14. Body

Number	Tool Number	Description	Q'ty	Remarks
①	07GAZ–SE30100	Torsion Rod Assembly Tool	1	

16. Electrical

Number	Tool Number	Description	Q'ty	Remarks
①	07GAC–SE00200	Fuel Sender Wrench	1	

Standards and Service Limits

5. Engine/Cylinder Head, Valve Train

	MEASUREMENT		STANDARD (NEW)	SERVICE LIMIT
Compression	200 min^{-1} (rpm) and wide-open throttle		Nominal: 1,177 kPa (12.0 kg/cm², 171 psi) Minimum: 981 kPa (10.0 kg/cm², 142 psi) Maximum variation: 196 kPa (2 kg/cm², 28 psi)	
Cylinder head	Warpage		—	0.05 (0.002)
	Height		133 (5.24)	132.8 (5.23)
Camshaft	End play		0.05–0.15 (0.002–0.006)	0.5 (0.02)
	Oil clearance		0.045–0.081 (0.0018–0.0032)	0.10 (0.004)
	Runout		0.015 (0.0006)	0.03 (0.001)
	Cam lobe height	IN	39.460 (1.5535)	—
		EX	39.409 (1.5515)	—
Valve	Valve clearance	IN	0	—
		EX	0	—
	Valve stem O.D.	IN	6.58–6.59 (0.2591–0.2594)	6.55 (0.258)
		EX	6.55–6.56 (0.2579–0.2583)	6.52 (0.257)
	Stem-to-guide clearance	IN	0.02–0.05 (0.001–0.002)	0.08 (0.003)
		EX	0.05–0.08 (0.002–0.003)	0.11 (0.004)
	Stem installed height	IN	50.00 (1.969)	50.35 (1.982)
		EX	47.50 (1.870)	47.85 (1.884)
Valve seat	Width	IN and EX	1.25–1.55 (0.049–0.061)	2.0 (0.08)
Valve spring	Free length	IN	53.90 (2.12)	52.90 (2.08)
		EX Inner	44.95 (1.77)	43.95 (1.73)
		Outer	49.55 (1.95)	48.55 (1.91)
	Squareness	IN	—	1.89 (0.072)
		EX Inner	—	1.57 (0.062)
		Outer	—	1.73 (0.068)
Valve guide	I.D.	IN and EX	6.61–6.63 (0.260–0.261)	6.65 (0.262)
Rocker arm	Arm-to-shaft clearance		0.018–0.054 (0.0007–0.0021)	0.08 (0.003)
Push rod	Runout		—	0.02 (0.0008)
Hydraulic tappet	Compression stroke		0.01–0.08 (0.0003–0.0031)	—

5. Engine/Engine Block

	MEASUREMENT		STANDARD (NEW)	SERVICE LIMIT
Cylinder block	Warpage of deck surface		0.07 (0.003) max.	0.10 (0.004)
	Bore diameter	A	87.00–87.02 (3.4252–3.4259)	87.07 (3.4279)
	Bore taper		—	0.05 (0.002)
	Reboring limit		—	0.5 (0.02)
Piston	Skirt O.D. (At 18 mm (0.71 in) from bottom of skirt)	A	86.981–86.994 (3.4244–3.4250)	86.97 (3.4240)
		B	86.971–86.984 (3.4240–3.4246)	86.96 (3.4236)
	Clearance in cylinder		0.016–0.039 (0.0006–0.0015)	0.08 (0.003)
	Piston-to-ring clearance (top and second)		0.015–0.045 (0.0006–0.0018)	0.13 (0.005)
Piston ring	Ring end gap Top		0.20–0.35 (0.008–0.014)	0.6 (0.02)
	Second		0.35–0.50 (0.014–0.019)	0.75 (0.03)
	Oil		0.20–0.70 (0.008–0.028)	0.8 (0.03)
Connecting rod	Pin-to-rod interference		0.013–0.032 (0.0005–0.0013)	—
	Large end bore diameter		Nominal 55 (2.17)	—
	End play installed on crankshaft		0.15–0.30 (0.006–0.012)	0.40 (0.016)
Crankshaft	Main journal diameter		63.976–64.000 (2.5187–2.5197)	—
	Taper/out-of-round, main journal		0.005 (0.0002) max.	0.010 (0.0004)
	Rod journal diameter		51.976–52.000 (2.0463–2.0472)	—
	Taper/out-of-round, rod journal		0.005 (0.0002) max.	0.010 (0.0004)
	End play		0.10–0.35 (0.004–0.014)	0.45 (0.018)
	Runout		0.01 (0.0004) max.	0.015 (0.0006)
Bearings	Main bearing-to-journal oil clearance		0.024–0.048 (0.0009–0.0019)	0.05 (0.002)
	Rod bearing-to-journal oil clearance		0.026–0.050 (0.0010–0.002)	0.05 (0.002)

Unit: mm (in.)

5. Engine/Engine Lubrication

	MEASUREMENT		STANDARD (NEW)	SERVICE LIMIT
Engine oil	Capacity ℓ (U.S. qt., Imp. qt.)		5.7 (6.0, 5.0) After engine disassembly 4.5 (4.8, 4.0) After oil change, including oil filter	
Oil pump	Displacement		55.9 ℓ (14.8 U.S. gal., 12.3 Imp. gal.) 5,000 min^{-1} (rpm)	
	Inner-to-outer rotor radial clearance Pump body-to-rotor radial clearance Pump body-to-rotor side clearance		0.04–0.18 (0.002–0.007) 0.10–0.18 (0.004–0.007) 0.02–0.07 (0.001–0.003)	0.2 (0.008) 0.2 (0.008) 0.12 (0.005)
Relief valve	Pressure setting 80°C (176°F)	At Idle	137 kPa (1.4 kg/cm², 20 psi) min.	
		At 3,000 min^{-1} (rpm)	490–569 kPa (5.0–5.8 kg/cm², 71–82 psi)	

5. Engine/Cooling

	MEASUREMENT	STANDARD (NEW)	
Radiator	Capacity (Includes heater) ℓ (U.S. qt., Imp. qt.) (Includes reservoir tank 0.7 (0.74, 0.61)	M/T: 8.8 (9.3, 7.7) A/T: 8.7 (9.2, 7.7)	
	Pressure cap opening pressure	88–118 kPa (0.9–1.20 kg/cm², 14–17 psi)	
Thermostat	Starts to open Full open Valve lift at full open	78 ± 2°C (172 ± 36°F) 91°C (196°F) 8 (0.31) min.	86–90°C (187–194°F)
Water pump	Gear ratio (crankshaft) Capacity: ℓ per min/at min^{-1} (rpm)	1.044 150/6,000 (39.6 U.S. gal, 33 Imp. gal./6,000 min^{-1} (rpm))	
Cooling fan	Fan-to-core clearance Thermoswitch "ON" temperature (Low) Thermoswitch "OFF" temperature (Low) Thermoswitch "ON" temperature (High) Thermoswitch "OFF" temperature (High)	7.5 (0.29) 81–87°C (179–189°F) Subtract 6 ± 2°C (43 ± 36°F) from the actual "ON" temperature (LOW). 87–93°C (188–199°F) Subtract 6 ± 2°C (43 ± 36°F) from the actual " ON" temperature (HIGH).	

6. Fuel and Emissions

	MEASUREMENT	STANDARD (NEW)
Fuel pump	Delivery pressure Displacement	250 kPa (2.55 kg/cm², 36 psi) 230 cm³ (cc)/min in 10 seconds
	Relief valve opening pressure	441–588 kPa (4.5–6.0 kg/cm², 64–85 psi)
Pressure regulator	Pressure	245–255 kPa (2.5–2.6 kg/cm², 35–37 psi)
Fuel Tank	Capacity	68 ℓ (18.0 U.S. gal., 15.0 Imp. gal.)
Engine	Fast idle	1,100–1,900 min^{-1} (rpm)
	Idle speed with headlights and cooling fan off	Manual 680 ± 50 min^{-1} (rpm) with cata, 720 ± 50 min^{-1} (rpm) without cata Automatic 680 ± 50 min^{-1} (rpm) ("N" position)
	Idle CO	0.1 % with cata, 2.0 % max without cata

7. Clutch

	MEASUREMENT	STANDARD (NEW)	SERVICE LIMIT
Clutch pedal	Pedal height Stroke Pedal play Disengagement height	153 (6.0) to carpet 145–150 (5.7–5.9) 9–15 (0.4–0.6) 90 (3.5) min. to floor	— — — —
Flywheel	Clutch surface runout I.D. of pilot bush	0.05 (0.002) max. 19.000–19.071 (0.7480–0.7508)	0.15 (0.006) —
Clutch plate	Rivet head depth Surface runout Radial play in splines Thickness	1.3 (0.05) min. 0.8 (0.03) max. 0.7–2.1 (0.028–0.083) 8.5–9.2 (0.33–0.36)	0.2 (0.008) 1.0 (0.04) 4.0 (0.16) 6.1 (0.24)
Clutch release bearing holder	I.D. Holder-to-guide sleeve clearance	35.00–35.059 (1.378–1.380) 0.05–0.15 (0.002–0.006)	35.09 (1.381) 0.22 (0.009)
Clutch cover	Uneveness of diaphragm spring	0.6 (0.02) max.	0.8 (0.03)

(cont'd)

Standards and Service Limits

8. Manual Transmission

	MEASUREMENT	STANDARD (NEW)	SERVICE LIMIT
Transmission oil	Capacity ℓ (U.S. qt., Imp. qt.)	2.3 (2.4, 2.0) at assembly 2.2 (2.3, 1.9) at oil change	
Mainshaft	End play	0.14–0.21 (0.006–0.083)	Adjust with a shim.
	Diameter of ball bearing contact area	27.977–27.990 (11.015–11.020)	29.930 (1.1783)
	Diameter of third gear contact area	37.984–38.000 (1.4954–1.4961)	37.930 (1.4933)
	Diameter of ball bearing contact area	27.987–28.000 (1.1018–1.1024)	27.940 (1.1000)
	Diameter of pilot bush contact area	18.80–18.85 (0.7402–0.7421)	—
	Runout	0.02 (0.0008) max.	0.05 (0.002)
Mainshaft third and fourth gears	I.D.	43.009–43.025 (1.6933–1.6939)	43.080 (1.6961)
	End play	0.06–0.21 (0.0024–0.0083)	0.30 (0.012)
	Thickness 3rd gear	35.42–35.47 (1.3945–1.3965)	35.30 (1.3898)
	4th gear	33.45–33.47 (1.3169–1.3177)	33.33 (1.3122)
Mainshaft fifth gear	I.D.	43.009–43.025 (1.6933–1.6939)	43.080 (1.6961)
	End play	0.06–0.21 (0.0024–0.0083)	0.30 (0.012)
	Thickness	31.92–31.97 (1.2567–1.2587)	31.80 (1.2520)
Countershaft	End play	0.10–0.35 (0.004–0.014)	0.50 (0.02)
	Diameter of needle bearing contact area	33.000–33.015 (1.2992–1.2998)	32.95 (1.297)
	Diameter of ball bearing needle bearing contact area	24.987–25.000 (0.9837–0.9845)	24.94 (0.982)
	Diameter of low gear contact area	39.984–40.000 (1.5742–1.5748)	39.93 (1.572)
	Runout	0.02 (0.0008) max.	0.05 (0.002)
Countershaft low gear	I.D.	46.009–46.025 (1.8114–1.8120)	46.08 (1.923)
	End play	0.03–0.08 (0.0012–0.0031)	Adjust with a shim.
Countershaft second gear	I.D.	50.009–50.025 (1.9689–1.9695)	50.08 (1.972)
	End play	0.03–0.10 (0.0012–0.0039)	Adjust with a collar.
	Thickness	32.92–32.97 (1.2961–1.2980)	32.8 (1.2913)
Spacer collar (Countershaft second gear)	I.D.	36.48–36.49 (1.4362–1.4366)	36.50 (1.437)
	O.D.	43.984–44.000 (1.7317–1.7323)	43.94 (1.730)
	Length A	28.98–29.00 (1.1409–1.1417)	—
	B	29.03–29.05 (1.1429–1.1437)	—
Spacer collar (Mainshaft fourth and fifth gears)	I.D.	31.002–31.012 (1.2205–1.2209)	31.06 (1.223)
	O.D.	37.989–38.000 (1.4956–1.4961)	37.94 (1.494)
	Length A	55.95–56.05 (2.2028–2.2067)	—
	B	26.03–26.08 (1.0248–1.0268)	—
Reverse idler gear	I.D.	20.020–20.041 (0.7882–0.7890)	20.09 (0.7909)
	Gear-to-reverse gear shaft clearance	0.020–0.054 (0.0008–0.0021)	0.160 (0.0006)
Synchronizer ring	Ring-to-gear clearance (ring pushed against gear)	0.85–1.10 (0.0335–0.0433)	0.40 (0.016)
Shift fork	Synchronizer sleeve gear Low and 2nd gears	8.90–9.00 (0.3504–0.3543)	—
	3rd and 4th gears	8.40–8.50 (0.3307–0.3346)	—
	5th gear	5.40–5.50 (0.2126–0.2165)	—
	Fork-to-synchronizer sleeve clearance	0.45–0.65 (0.018–0.026)	1.0 (0.039)
Reverse shift fork	End gap	13.0–13.3 (0.5118–0.5236)	—
	Fork-to-reverse idler gear clearance	0.5–1.1 (0.018–0.043)	1.8 (0.071)
	Groove width	7.05–7.25 (0.2776–0.2854)	—
	Fork-to-fifth/reverse shift shaft clearance	0.05–0.35 (0.002–0.014)	0.5 (0.02)
Shift arm	Width of groove in shift rod guide	8.1–8.2 (0.319–0.323)	—
	Shift arm-to-shift rod guide clearance	0.2–0.3 (0.008–0.012)	0.55 (0.022)
	Width in shift guide	13.05–13.25 (0.514–0.522)	—
	Shift arm-to-shift guide clearance	0.05–0.35 (0.002–0.014)	0.6 (0.02)
Interlock	O.D.	12.05–12.15 (0.4744–0.4783)	—
	Interlock-to-change piece clearance	0.05–0.25 (0.002–0.010)	0.5 (0.02)
Ring gear	Backlash	0.085–0.142 (0.0033–0.0056)	0.2 (0.0079)
Differential carrier	Pinion shaft bore diameter	18.000–18.018 (0.7087–0.7094)	—
	Carrier-to-pinion shaft clearance	0.016–0.052 (0.0006–0.0020)	0.1 (0.004)
	Driveshaft bore diameter	30.000–30.021 (1.1811–1.1819)	—
	Carrier-to-driveshaft clearance	0.025–0.066 (0.0010–0.0026)	0.12 (0.005)
Differential pinion gear	Backlash	0.08–0.15 (0.003–0.006)	Adjust with a washer.
	Pinion gear bore diameter	18.043–18.061 (0.7104–0.7111)	—
	Pinion gear-to-pinion shaft clearance	0.057–0.095 (0.0022–0.0037)	0.15 (0.006)
Differential taper roller bearing	Preload N·m (kg-m, lb-ft)	1.4–2.0 (0.14–0.20, 1.0–1.4)	Adjust with a washer.

Unit: mm (in.)

9. Automatic Transmission

	MEASUREMENT		STANDARD (NEW)	SERVICE LIMIT
Transmission oil	Capacity ℓ (U.S. qt., Imp. qt.)		3.2 (3.4, 2.8) at oil change 6.5 (6.9, 5.7) at assembly	
Hydraulic pressure	Line pressure at 2,000 min⁻¹ (rpm)		814–863 kPa (8.3–8.8 kg/cm², 118–125 psi)	765 kPa (7.8 kg/cm², 111 psi)
	4th, 3rd, 2nd clutch pressure at 2,000 min⁻¹ (rpm)		490–863 kPa (5.0–8.8 kg/cm², 71–125 psi)	441 kPa (4.5 kg/cm², 64 psi) with lever released 765 kPa (7.8 kg/cm², 111 psi) with throttle more than 3/8 OPEN
	1st clutch pressure at 2,000 min⁻¹ (rpm)		814–863 kPa (8.3–8.8 kg/cm², 118–125 psi)	765 kPa (7.8 kg/cm², 111 psi)
	Throttle pressure B	Full closed	0	——
		Full open	814–863 kPa (8.3–8.8 kg/cm², 118–125 psi)	765 kPa (7.8 kg/cm², 111 psi)
	Modulator pressure		520–559 kPa (5.3–5.7 kg/cm², 75–81 psi)	490 kPa (5.0 kg/cm², 71 psi)
Stall speed	Check with car on level ground		2,150–2,450 min⁻¹ (rpm)	——
Clutch	Clutch initial clearance	1st	0.65–0.85 (0.026–0.034)	——
		2nd, 3rd	0.5–0.7 (0.020–0.028)	——
		4th	0.4–0.6 (0.016–0.024)	——
	Clutch return spring free length		31.0 (1.22)	29.0 (1.14)
	Clutch disc thickness		1.88–2.0 (0.074–0.079)	Until grooves worn out
	Clutch plate thickness		1.95–2.05 (0.077–0.079)	Discoloration
	Clutch end plate thickness	Mark 1	2.05–2.10 (0.081–0.083)	↑
		Mark 2	2.15–2.20 (0.085–0.087)	
		Mark 3	2.25–2.30 (0.089–0.091)	
		Mark 4	2.35–2.40 (0.093–0.094)	
		Mark 5	2.45–2.50 (0.096–0.098)	
		Mark 6	2.55–2.60 (0.100–0.102)	
		Mark 7	2.65–2.70 (0.104–0.106)	
		Mark 8	2.75–2.80 (0.108–0.110)	
		Mark 9	2.85–2.90 (0.112–0.114)	
		Mark 10	2.95–3.00 (0.116–0.118)	
		Mark 11*	3.05–3.10 (0.120–0.122)	
		Mark 12*	3.15–3.20 (0.124–0.126)	
		Mark 13*	3.25–3.30 (0.128–0.130)	
		Mark 14*	3.35–3.40 (0.132–0.134)	Discoloration
Transmission	Diameter of needle bearing contact area on main and stator shaft		22.980–22.993 (0.9047–0.9052)	Wear or damage ↑
	Diameter of needle bearing contact area on mainshaft 2nd gear		35.975–35.991 (1.4163–1.4169)	
	Diameter of needle bearing contact area on mainshaft 4th gear collar		31.975–31.991 (1.2588–1.2594)	
	Diameter of needle bearing contact area on mainshaft 1st gear collar		30.975–30.991 (1.2195–1.2201)	
	Diameter of needle bearing contact area on countershaft (R side)		38.505–38.515 (1.5159–1.5163)	
	Diameter of needle bearing contact area on countershaft 3rd gear		43.975–43.991 (1.7313–1.7319)	
	Diameter of needle bearing contact area on countershaft 4th gear		31.975–31.991 (1.2589–1.2595)	
	Diameter of needle bearing contact area on countershaft reverse gear collar		32.975–32.991 (1.2982–1.2989)	
	Diameter of needle bearing contact area on countershaft 1st gear collar		32.975–32.991 (1.2982–1.2989)	
	Diameter of needle bearing contact area on reverse idle gear		13.990–14.000 (0.5508–0.5512)	
	Reverse idler shaft holder I.D.		14.416–14.434 (0.5676–0.5683)	
	Mainshaft 2nd gear I.D.		42.000–42.016 (1.6141–1.6148)	
	Mainshaft 1st gear I.D.		36.000–36.016 (1.4173–1.4179)	
	Countershaft 4th gear I.D.		38.000–38.016 (1.4961–1.4966)	
	Countershaft 3rd gear I.D.		49.000–49.016 (1.9291–1.9298)	
	Countershaft 1st gear I.D.		39.000–39.016 (1.5354–1.5361)	
	Countershaft reverse gear I.D.		39.000–39.016 (1.5354–1.5361)	
	Reverse idle gear I.D.		18.007–18.020 (0.7086–0.7094)	Wear or damage ↓
	Mainshaft 4th gear end play		0.10–0.22 (0.004–0.009)	——
	Mainshaft 2nd gear end play		0.07–0.15 (0.003–0.006)	Adjustable
	Mainshaft 1st gear end play		0.08–0.24 (0.003–0.009)	——
	Countershaft 3rd gear end play		0.07–0.15 (0.003–0.006)	——
	Countershaft 2nd gear end play		0.07–0.15 (0.003–0.006)	Adjustable
	Reverse idler gear end play		0.05–0.18 (0.002–0.007)	——
	Countershaft reverse gear end play		0.10–0.25 (0.004–0.010)	——

*1st lutch only

(cont'd)

9. Automatic Transmission (cont'd)

	MEASUREMENT		STANDARD (NEW)	SERVICE LIMIT
Transmission (cont'd)	Thrust washer thickness			
	Mainshaft 2nd gear	A	3.97–4.00 (0.156–0.157)	—
		B	4.02–4.05 (0.158–0.159)	—
		C	4.07–4.10 (0.160–0.161)	—
		D	4.12–4.15 (0.162–0.163)	—
		E	4.17–4.20 (0.164–0.165)	—
		F	4.22–4.25 (0.166–0.167)	—
		G	4.27–4.30 (0.168–0.169)	—
		H	4.32–4.35 (0.170–0.171)	—
		I	4.37–4.40 (0.172–0.173)	—
	Mainshaft bearing contact area (L side)		3.75–3.85 (0.148–0.152)	Wear or damage
	Mainshaft 1st gear		2.43–2.50 (0.096–0.098)	Wear or damage
	"L" collar frange thickness		4.35–4.50 (1.1713–1.1772)	
	Countershaft 4th gear collar thickness	A	47.42–47.45 (1.8669–1.8681)	—
		B	47.47–47.50 (1.8689–1.8701)	—
		C	47.52–47.55 (1.8709–1.8720)	—
		D	47.57–47.60 (1.8728–1.8740)	—
		E	47.62–47.65 (1.8748–1.8760)	—
		F	47.67–47.70 (1.8768–1.8779)	—
		G	47.72–47.75 (1.8787–1.8799)	—
		H	47.77–47.80 (1.8807–1.8819)	—
		I	47.82–47.85 (1.8827–1.8839)	—
		J	47.87–47.90 (1.8846–1.8858)	—
	Thrust washer thickness (mainshaft 1st gear R side)		1.45–1.50 (0.057–0.059)	1.4 (0.055)
	Mainshaft 1st gear collar length		24.50–24.55 (0.4646–0.9665)	—
	Mainshaft 1st gear collar flange thickness		2.5–2.6 (0.098–0.102)	Wear or damage
	Countershaft reverse gear collar length		12.0–12.1 (0.472–0.476)	—
	Countershaft reverse gear collar flange thickness		2.4–2.6 (0.094–0.102)	Wear or damage
	Countershaft 1st gear collar length		12.0–12.1 (0.472–0.476)	—
	Countershaft 1st gear collar flange thickness		2.4–2.6 (0.095–0.102)	Wear or damage
	Diameter of countershaft one-way clutch contact area		83.339–83.365 (3.2811–3.2821)	Wear or damage
	Diameter of parking gear one-way clutch contact area		66.685–66.698 (2.6254–2.6259)	Wear or damage
	Mainshaft feed pipe O.D.		8.97–8.98 (0.3531–0.3535)	8.95 (0.3524)
	Countershaft feed pipe O.D.		7.97–7.98 (0.3138–0.3142)	7.95 (0.31)
	Mainshaft sealing ring 35 mm Thickness		1.980–1.995 (0.0780–0.0785)	1.8 (0.071)
	Mainshaft bushing I.D.		6.018–6.030 (0.2369–0.2374)	6.045 (0.238)
	Mainshaft bushing I.D.		9.000–9.015 (0.3543–0.3549)	9.03 (0.356)
	Countershaft bushing I.D.		8.000–8.015 (0.3150–0.3156)	8.03 (0.316)
	Mainshaft sealing ring groove width		2.025–2.060 (0.0797–0.0811)	2.08 (0.082)
	Selector hub O.D.		51.87–51.90 (2.0421–2.0433)	Wear or damage
Regulator valve body	Sealing ring contact area diameter		35.000–35.025 (1.3780–1.3789)	35.05 (1.38)
Shifting device and parking brake control	Reverse shift fork thickness		5.9–6.0 (0.232–0.236)	5.4 (0.21)
	Parking brake ratchet pawl		—	Wear or other defect
	Parking gear		—	Wear or other defect
	Throttle cam stopper		18.5–18.6 (0.728–0.732)	—
Servo body	Shift fork shaft bore I.D.	A	14.000–14.005 (0.5512–0.5514)	—
		B	14.006–14.010 (0.5514–0.5516)	—
		C	14.011–14.015 (0.5516–0.5518)	—
	Shift fork shaft valve bore I.D.		37.000–37.039 (1.4567–1.4582)	37.045 (1.4585)
Valve body	Oil pump gear side clearance		0.03–0.05 (0.0012–0.0020)	0.07 (0.003)
	Oil pump gear-to-body clearance		Drive: 0.210–0.265 (0.0083–0.0104)	—
			Driven: 0.070–0.125 (0.003–0.005)	—
	Stator camshaft needle bearing contact I.D. (Torque converter side)		27.000–27.021 (1.0630–1.0638)	Wear or damage
	Stator camshaft needle bearing contact I.D. (Oil pump side)		29.000–29.013 (1.1417–1.1422)	—
	Oil pump driven gear I.D.		14.016–14.034 (0.5518–0.5525)	Wear or damage
	Oil pump shaft O.D.		13.980–13.990 (0.5504–0.5508)	Wear or damage

9. Automatic Transmission (cont'd)

Unit: mm (in.)

	MEASUREMENT	STANDARD (NEW)			
Springs		Wire Dia.	O.D.	Free Length	No. of coils
	Low accumlator ball spring	0.29 (0.01)	4.0 (0.16)	14.0 (0.55)	13
	Idle shaft spring A	0.7 (0.03)	5.7 (0.22)	14.6 (0.57)	7
	Idle shaft spring B	0.8 (0.03)	5.6 (0.22)	20.7 (0.81)	11.5
	Servo detent spring	1.0 (0.04)	7.6 (0.30)	14.8 (0.58)	5.5
	Regulator valve spring A	1.8 (0.07)	14.7 (0.58)	87.4 (3.44)	16.5
	Regulator valve spring B	1.8 (0.07)	9.6 (0.38)	44.0 (1.73)	7.5
	Stator reaction spring	6.0 (0.24)	38.4 (1.51)	30.3 (1.19)	2
	Torque converter check valve spring	1.1 (0.04)	8.4 (0.33)	36.4 (1.43)	12
	Relief valve spring	1.0 (0.04)	8.4 (0.33)	52.0 (2.05)	23
	Cooler check valve spring	1.2 (0.05)	8.4 (0.33)	35.7 (1.41)	16.5
	2nd orifice control valve spring	0.8 (0.03)	6.6 (0.26)	38.5 (1.52)	28
	4th orifice control spring	0.9 (0.04)	6.6 (0.26)	27.6 (1.09)	10
	Servo orifice control valve spring	0.9 (0.04)	6.1 (0.24)	35.9 (1.41)	20
	Throttle control valve adjuster spring A	0.8 (0.03)	6.2 (0.24)	30.0 (1.18)	8
	Throttle control valve spring B	1.6 (0.06)	8.5 (0.33)	41.3 (1.63)	13.9
	1—2 shift spring	0.9 (0.04)	8.6 (0.34)	40.4 (1.59)	14.5
	2—3 shift spring	0.9 (0.04)	9.6 (0.38)	39.6 (1.56)	12
	3—4 shift spring	0.7 (0.03)	5.6 (0.22)	48.3 (1.90)	27.8
	Low accumulator spring A	2.8 (0.11)	21.5 (0.85)	58.5 (2.30)	8.3
	Low accumulator spring B	2.3 (0.09)	12.1 (0.48)	40.0 (1.57)	7.4
	Top accumulator spring	3.0 (0.12)	16.4 (0.65)	81.7 (3.22)	16.4
	2nd accumulator spring	2.71 x 4.4 (0.11 x 0.17)	20.0 (0.79)	79.7 (3.14)	16.2
	3rd accumulator spring	2.9 (0.11)	17.9 (0.70)	82.2 (3.24)	12.1
	L/C shift spring	1.1 (0.04)	8.6 (0.34)	51.0 (2.01)	18.6
	L/C timing spring B	0.9 (0.04)	5.6 (0.22)	40.7 (1.60)	30
	L/C control spring	0.8 (0.03)	6.6 (0.26)	39.5 (1.56) 40.2 (1.58) 41.0 (1.61)	25
	Modulator valve spring	1.5 (0.06)	9.4 (0.37)	30.6 (1.20)	9.9
	CPC valve spring A, B (Modulator valve)	1.4 (0.06)	9.4 (0.37)	33.0 (1.30)	10.5
	CPC valve spring A, B (CPC valve)	1.4 (0.06)	9.4 (0.37)	32.4 (1.28)	10.5
	4—3 kick down valve spring	0.9 (0.04)	6.6 (0.26)	32.2 (1.27)	16
	3—2 kick down valve spring	1.0 (0.04)	6.6 (0.26)	40.5 (1.59)	20
	2—1 orifice control spring	0.8 (0.03)	6.4 (0.25)	41.5 (1.63)	22.8
	2nd clutch return spring	6.0 x 6.4 (0.24 x 0.25)	66.4 (2.61) at free	31.0 (1.22)	1.25
	Low clutch return spring	6.3 x 5.82 (0.25 x 0.23)	63.2 (2.49) at free	31.0 (1.22)	1.25
	Servo control valve spring	1.2 (0.05)	8.1 (0.32)	43.2 (1.70)	19

(cont'd)

Standards and Service Limits

9. Automatic Transmission (cont'd)

	MEASUREMENT		STANDARD (NEW)	SERVICE LIMIT
Ring gear	Backlash		0.085–0.142 (0.0033–0.0056)	0.2 (0.0079)
Differential carrier	Pinion shaft bore diameter		18.000–18.018 (0.7087–0.7094)	—
	Carrier-to-pinion shaft clearance		0.016–0.052 (0.0006–0.0020)	0.1 (0.004)
	Driveshaft bore diameter		30.000–30.021 (1.1811–1.1819)	—
	Carrier-to-driveshaft clearance		0.025–0.066 (0.0010–0.0026)	0.12 (0.005)
Differential pinion gear	Backlash		0.08–0.15 (0.003–0.006)	Adjust with a washer.
	Pinion gear bore diameter		18.043–18.061 (0.7104–0.7111)	—
	Pinion gear-to-pinion shaft clearance		0.057–0.095 (0.0022–0.0037)	0.15 (0.006)
Differential taper roller bearing	Preload N•m (kg-m, lb-ft)	New	2.7–3.9 (0.28–0.4, 2.0–2.9)	Adjust with a washer.
		Reused	2.5–3.6 (0.25–0.37, 1.8–2.7)	Adjust with a washer.

10. Driveshaft

	MEASUREMENT		STANDARD (NEW)	SERVICE LIMIT
Driveshaft	Right boot	As installed	533–537.5 (21.0–21.2)	—
	Left boot	As installed	533–537.5 (21.0–21.2)	—

11. Power Steering

	MEASUREMENT	STANDARD (NEW)	SERVICE LIMIT
Steering wheel	Play	10 (0.39) Max.	—
	Pinion starting torque N•m (kg-m, ft-lb)	1.2 (0.12, 0.86)	
Power steering	Pump pressure with valve closed (Oil temp./speed: 40°C (104°F) min/idle. Do not run for more than 5 seconds) kPa (kg/cm², psi)	7845–8826 (80–90, 1138–1280)	
	Fluid capacity Reservoir	0.5 ℓ (0.53 U.S. qt., 0.44 Imp. qt.)	
	At change	approx 1.7 ℓ (1.8 U.S. qt., 1.5 Imp. qt.)	
Power steering belt	Deflection midway between pulleys/load	19–24 (0.75–0.94)/98N (10 kg/22 lb) for used belt 13–16 (0.51–0.63)/98N (10 kg/22 lb) for new belt	

12. Suspension

	MEASUREMENT			STANDARD (NEW)		SERVICE LIMIT
Wheel alignment				Front	Rear	
	Camber			0°00′ ± 1°	0°00′ ± 1°	
	Caster			1°40′ ± 1°		
	Toe-in			0 ± 3	0^{+4}_{0}	
				(0 ± 0.12)	($0^{+0.16}_{0}$)	
Wheel	Rim runout	Aluminum	Axial	0–0.3 (0–0.012)		—
			Radial	0–0.3 (0–0.012)		—
Wheel bearing	End play		Front	0		0.05
			Rear	0		0.05

Unit: mm (in.)

13. Brake

	MEASUREMENT		STANDARD (NEW)	SERVICE LIMIT
Parking brake lever	Play in stroke 200N (20 kg, 44 lbs)		To be locked when pulled 7–11 notches	
Foot brake pedal	Pedal height Free play		170.6 (6.7) from floor 1–5 (0.04–0.20)	— 5 (0.20)
Master cylinder	Piston-to-pushrod clearance		0–0.2 (0–0.008)	—
Disc brake	Disc thickness	Front	21.0 (0.83)	19.0 (0.75)
		Rear	10.0 (0.39)	8.0 (0.31)
	Disc runout	Front/Rear	—	0.1 (0.004)/0.15 (0.006)
	Disc parallelism		—	0.015 (0.0006)
	Pad thickness	Front	11.5 (0.45)	3.0 (0.12)
		Rear	10.0 (0.39)	3.0 (0.12)
Brake booster	Characteristics	Vacuum (mmHg)	Pedal Pressure Kg (lb.)	Line Pressure kPa (Kg/cm², psi)
		0	20 (44)	774 (7.9, 112)
		300	20 (44)	6135 (62.6, 890)
		500	20 (44)	8252 (84.2, 1198)

16. Electrical

	MEASUREMENT	STANDARD (NEW)	
Ignition coil	Rated voltage	12 Volts	
	Primary winding resistance	0.315–0.385 ohms	
	Secondary winding resistance	9,040–13,560 ohms	
Ignition wire	Resistance	25,000 ohms max.	
Spark plug	Type	BCPR6EY-N11 (NGK)*2 BCPR7E-11 (NGK), Q22PR-U11 (ND) BCPR7EY-N11 (NGK)*2 BCPR5E-11 (NGK)*1, Q16PR-U11 (ND)*1 BCPR5EY-N11 (NGK)*1 (or equivalent) *1: KQ only *2: With catalytic converter	
	Gap	1.0–1.1 (0.039–0.043)	
Ignition timing	At idling	15° ± 2°BTDC	
Battery	Lighting capacity (20-hour ratio) Starting capacity (5-second ratio)	60 Ampere Houres (KE, KQ only), 65 Ampere Houres (Others) 8.4 V minimum at 300 Ampere draw	
Alternator	Output	13.5 V/70 A	
	Coil resistance (rotor) Slip ring O.D. Brush length Brush spring tension	2.8–3.0 ohms 14.4 (0.57) 10.5 (0.41) 300–360 g (10.6–12.7 oz)	— 14.0 (0.55) 5.5 (0.22) —
Alternator belt	Deflection midway between pulleys/load	17.0–19.5 (0.67–0.77)/98 N (10 kg, 22 lb) for used belt 11–13 (0.43–0.51)/98 N (10 kg, 22 lb) for new belt	

Starting motor		1.6 KW (ND)	
	MEASUREMENT	STANDARD (NEW)	SERVICE LIMIT
	Mica depth	0.5–0.8 (0.015–0.031)	0.2 (0.008)
	Commutator runout	0–0.05 (0–0.002)	0.4 (0.016)
	Commutator O.D.	29.9–30.0 (1.177–1.181)	29.0 (1.14)
	Brush length	15.0–15.5 (0.59–0.61)	10.0 (0.39)
	Spring pressure (new)	17–24 N (1.7–2.4 kg, 3.7–5.3 lb.)	—

Design Specifications

	ITEMS	METRIC	ENGLISH	NOTES
DIMENSIONS	Overall Length	4,755 mm	187.2 in.	
		4,780 mm	188.2 in.	with bumper guard
	Overall Width	4,775 mm	188.0 in.	KY type
	Overall Height	1,745 mm	68.7 in.	
	Wheelbase	1,370 mm	53.9 in.	
	Track F/R	1,380 mm	54.3 in.	KY type
	Ground Clearance	2,705 mm	106.5 in.	
	Seating Capacity	1,500/1,500 mm	59.1/59.1 in.	
		150 mm Five	5.9 in.	
WEIGHTS	Engine weight	175 kg	386 lb.	
	Curb Weight with Catalytic converter 5M/T	1,395 kg	3,075 lb.	
	Curb Weight with Catalytic converter 4A/T	1,415 kg	3,120 lb.	
	Curb Weight without Catalytic Converter 5M/T	1,410 kg	3,108 lb.	
	Curb Weight without Catalytic Converter 4A/T	1,430 kg	3,152 lb.	
	Weight Distribution (Front/Rear) with Catalytic 5M/T	880 kg/515 kg	1,940 lb./1,135 lb.	
	Weight Distribution (Front/Rear) with Catalytic Converter 4A/T	900 kg/515 kg	1,984 lb./1,135 lb.	
	Weight Distribution (Front/Rear) without Catalytic 5M/T	895 kg/515 kg	1,973 lb./1,135 lb.	
	Weight Distribution (Front/Rear) without Catalytic Converter 4A/T	915 kg/515 kg	2,017 lb./1,135 lb.	
	Max. Permissible Weight	1,920 kg	4,233 lb.	
	Max. Vehicle Weight	1,980 kg	4,365 lb.	KY type
	Max. Loaded Vehicle Weight (ADR)	1,845 kg	4,068 lb.	KQ type
ENGINE	Type	Water cooled, 4-cycles O.H.C., gasoline engine		
	Cylinder Arrangement	V6-Cylinder, transverse		
	Bore and Stroke	87.0 X 75.0 mm	3.43 X 2.95 in.	
	Displacement	2,675 cm³ (cc)	163 cu. in.	
	Compression Ratio with catalytic converter	9.0:1		
	Compression Ratio without catalytic converter	9.4:1		
	Valve Train	Belt driven, single overhead camshaft		
	Lubrication System	Trochoid pump		
	Fuel Required with catalytic converter	Unleaded gasoline with 91 research octane number or higher.		
	Fuel Required without catalytic converter	Leaded gasoline with 97 research octane number or higher.		
STARTER	Type ND	Gear reduction		
	Normal output	1.6 KW		
	Nominal voltage	12 V		
	Hour rating	30 seconds		
	Direction of rotation	Counterclockwise as viewed from gear end		
	Weight	4.6 kg	10.1 lb.	
TRANSMISSION	Clutch M/T	Single plate dry, diaphragm spring		
	Clutch A/T	Torque Converter		
	Transmission M/T	Synchronized 5 forward 1 reverse		
	Transmission A/T	Electronically controlled 4 forward speed automatic; 1 reverse		
	Primary Reduction	Direct 1:1		
	Gear Ratio	M/T	A/T	
	1st	2.923	2.647	
	2nd	1.789	1.555 *1.448	*: KX only
	3rd	1.222	1.058	
	4th	0.909	0.794	
	5th	0.750	———	
	Reverse	3.000	1.904	
	Final Reduction M/T	Single helical gear, 4.200		
	Final Reduction A/T	Single helical gear, 4.266		
	Clutch Lining Area	176 cm²	27.3 sq. in.	
STEERING SYSTEM	Type	Rack and Pinion		
	Overall Ratio	17.6:1		
	Turns, lock-to-lock	3.36		
	Steering Wheel Dia.	385 mm	15.2 in.	
	Power Steering Oil Capacity	1.7 ℓ	1.8 U.S. qt., 1.5 Imp. qt.	
	Power Steering Oil	Genuine Power Steering Fluid P/N 08208-99961		

	ITEMS	METRIC	ENGLISH	NOTES
SUSPENSION	Front	Independent Double wishbone, coil spring		
	Rear	Independent Double wishbone, coil spring		
	Shock Absorber, Front and Rear	Telescopic, hydraulic		
WHEEL ALIGNMENT	Camber Front and Rear	0°		
	Caster	1°40′		
	Toe-in Front	0 mm	0 in.	
	Rear	0 mm	0 in.	
BRAKE SYSTEM	Type, Front	Power assisted self-adjusting ventilated disc.		
	Type, Rear	Power assisted self-adjusting solid disc.		
	Pad and Lining Surface Area: Front/Rear	50.0/30.0 cm²	7.8/4.6 sq. in.	
	Parking Brake Kind and Type	Mechanical expanding, rear two wheel brakes		
TIRES	Size	205/60 VR15		
AIR CONDITIONER	Cooling capacity	3,800 Kcal/h	15,077 BTU/h	
	– Conditions:			
	Compressor Revolution Speed	1,800 min⁻¹ (rpm)		
	Outside air temperature	27.5°C	81.5°F	
	Outside air humidity	50%		
	Condenser air temperature	35°C	95°F	
	Condenser air velocity	4.5 m/sec.	14.8 ft/sec.	
	Blower capacity	420 m³/h	14,836 cu. ft/h	
	Compressor (NIPPONDENSO) Type	Swash plate type		
	No. of cylinders	10		
	Capacity	172 cc/rev.	10.49 cu. in/rev.	
	Max. speed	8,000 min⁻¹ (rpm)		
	Lubricant/capacity	80 cc	2.7 U.S. oz.	
	Condenser	Corrugated fin type		
	Evaporator	Corrugated fin type		
	Blower Type	Sirocco fan		
	Motor input	185 W (12 V)		
	Speed control	Infinitely variable		
	Max. capacity	420 m³/h	14,836 cu. ft/h	
	Temp. Control	Air-mix type		
	Comp. Clutch Type	Dry, single plate, V-belt-1A		
	Power consumption	40 W max.	12 V	
	Refrigerant Type	R-12		
	Quantity	0.90 ± 0.05 kg	1.88 ± 0.11 lb.	
ELECTRICAL	Battery	12 V – 65 AH		
		12 V – 60 AH		KE, KQ
	Starter	12 V – 1.6 kW		
	Alternator	12 V – 70 amps		
	Fuses In the fuse box	7.5 A, 10 A, 15 A, 20 A		
	In the relay box	7.5A, 10 A, 15 A, 20 A, 30 A, 40 A, 70 A		
	Headlights High/Low	12 V – 60/55 W		
	Front Turn Signal Lights	12 V – 21 W		
	Rear Turn Signal Lights	12 V – 21 W		
	Side Turn Signal Lights	12 V – 21/5 W		
	Stop/Taillights	12 V – 5 W		except KQ
	Front Marker Lights	12 V – 5 W		
	Rear Marker Lights	12 V – 5 W		
	Back-up Lights	12 V – 21 W		
	License Plate Lights	12 V – 8 W		
	Gauge Lights	12 V – 3.4/3.0/1.4 W		
	Indicator Lights	12 V – 1.2W, 1.4 W		
	Warning Lights	12 V – 1.4 W		
	Glove Box Lights	12 V – 3.4 W		
	Dome Light	12 V – 8 W		
	Trunk Light	12 V – 3.4 W		
	Door Courtesy Lights	12V – 3.4 W		
	Illumination and Pilot Lights	12 V – 1.4 W, 1.12 W, 1.1 W, 0.91 W, 0.7 W, 0.56 W, LED		
	Heater Illumination Lights	12 V – 1.4 W, 2 W		
	Map Lights	12 V – 5 W		
	Vanity Mirror Light	12 V – 2 W		

Body Specifications

Unit: mm (in.)

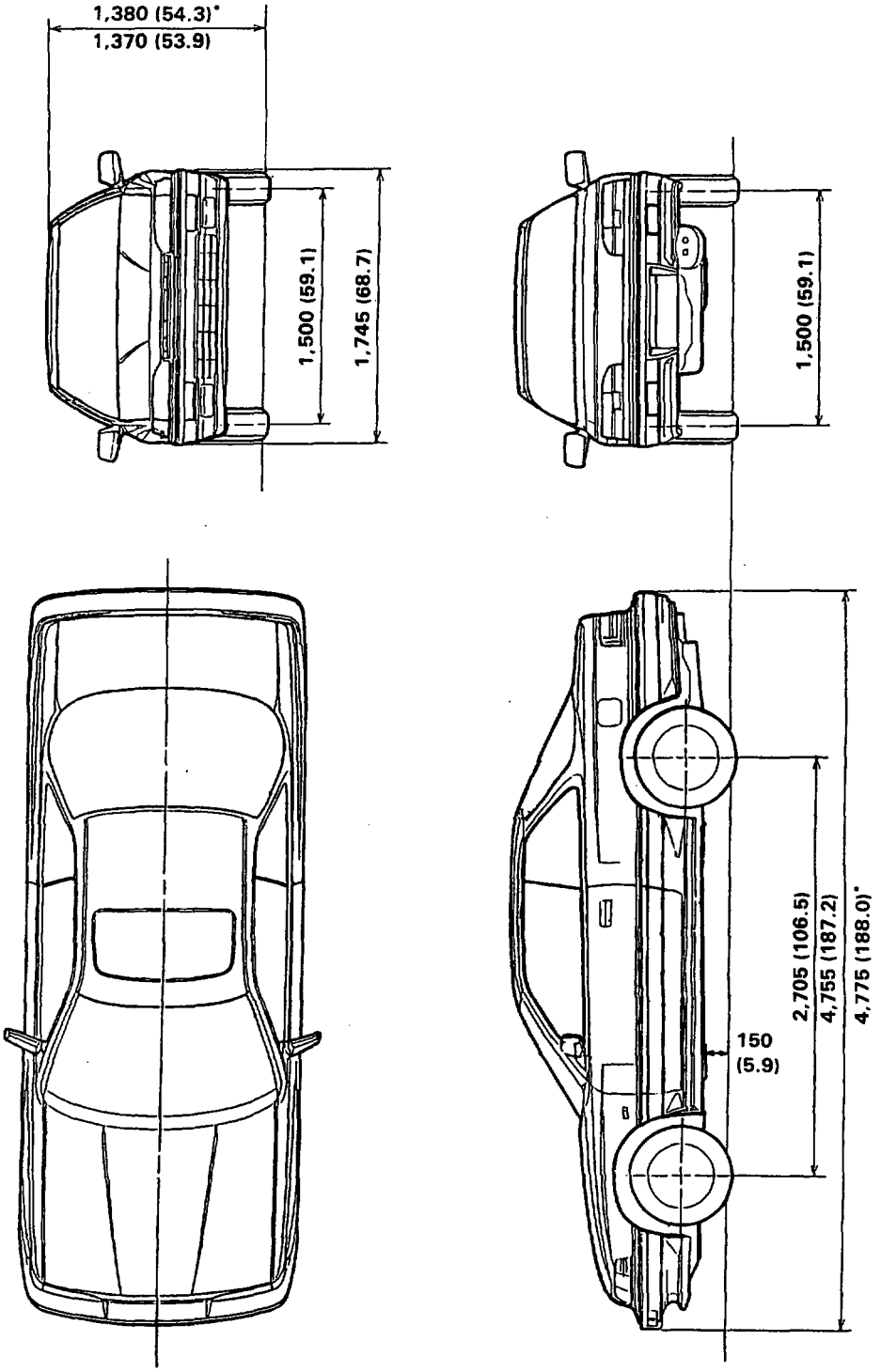

* : KY type

Frame Repair Chart

Unit: mm

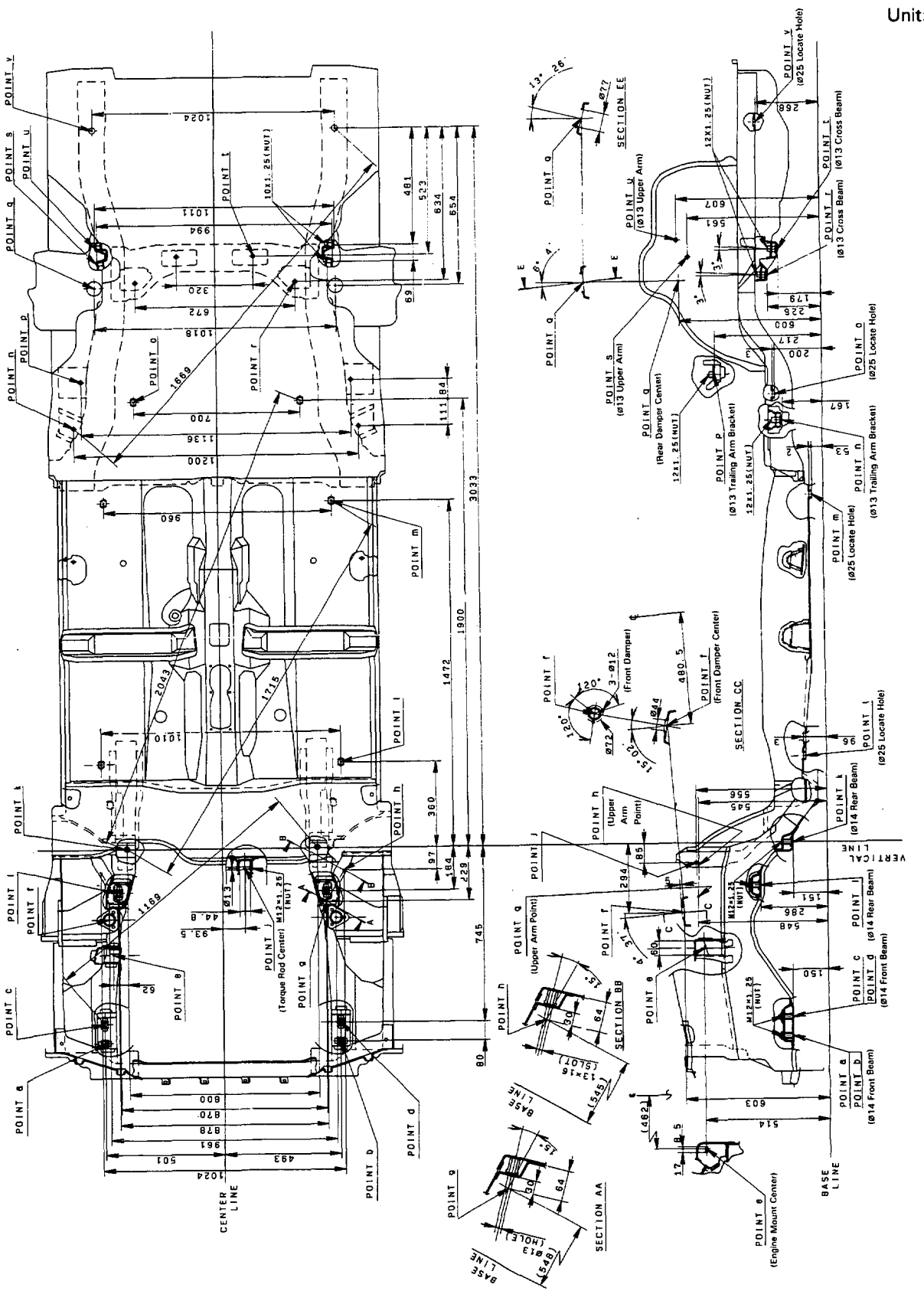

Lubrication Points

No.	LUBRICATION POINTS		LUBRICANT
1	Engine		API Service Grade: SE or SF SAE Viscosity: See chart below
2	Transmission	Manual Automatic	API Service Grade: SE or SF SAE10W–30 or 10W–40 grade oil DEXRON® or DEXRON® II Automatic transmission fluid
3 4	Brake reservoir Clutch reservoir		Brake fluid DOT 3
5	Steering gearbox (Power)		Power Steering grease P/N 08733-B070E
6 7 8 9 10 11 12 13 14 15 16 17 18 19 20 21 22 23	Steering ball joint Steering Boot Shift lever pivot (Manual) Shift rod clevis bushings Select lever (Automatic) Pedal linkage Throttle cable end Brake master cylinder pushrod Parking brake wire end Trunk hinges Door hinges upper and lower Door opening detents Fuel filler lid Engine hood hinges Engine hood latch Parking brake equalizer Clutch release fork Clutch master cylinder pushrod		Multi-purpose Grease
24	Caliper	Piston seal Dust seal Caliper pin Piston	Silicone Grease
25	Power steering reservoir		Power steering fluid P/N 08208–99961

Recommended Engine oil
(SE or SF Grade Only)

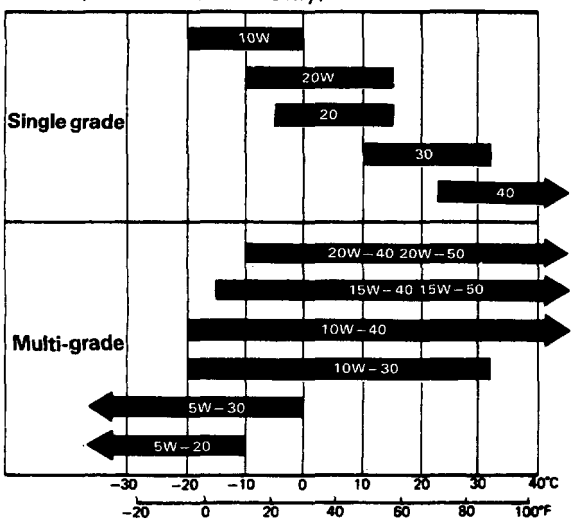

Engine oil viscosity for
ambient temperature ranges.

CAUTION: Used engine oil may cause skin cancer if repeatedly left in contact with the skin for prolonged periods. Although this is unlikely unless you handle used oil on a daily basis, it is still advisable to thoroughly wash your hands with soap and water as soon as possible after handling used oil.

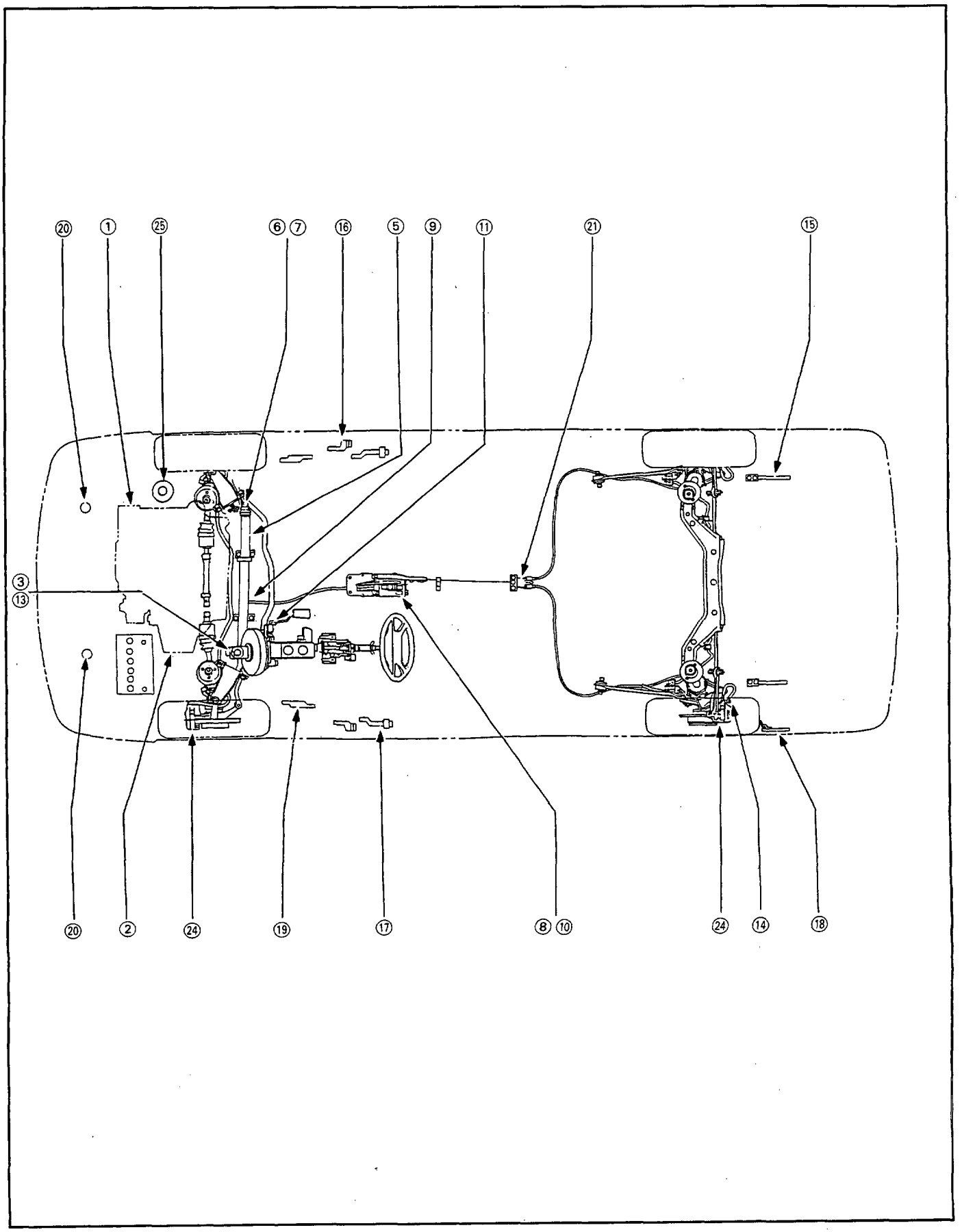
⑳
①
㉕
⑥⑦
⑯
⑤
⑨
⑪
㉑
⑮
③
⑬
⑳
②
㉔
⑲
⑰
⑧⑩
㉔
⑭
⑱

Maintenance Schedule

Service at the interval of listed x 1,000 km (miles) or after that number of months, whichever comes first.	R—Replace I—Inspect After inspection, clean, adjust, repair or replace if necessary					
ITEMS	x 1,000 km	20	40	60	80	100
	x 1,000 miles	12	24	36	48	60
	months	12	24	36	48	60
Idle speed and idle CO *5		I	I	I	I	I
Idle speed and idle CO *6						I
■ Engine oil and oil filter		Replace every 10,000 km (6,000 miles) or 6 months				
■ Transmission oil			R		R	
■ Radiator coolant					R*1	
Cooling system, hoses and connections			I		I	
E.G.R. system *4						I
E.G.R. system *2				I		I
E.G.R. filter *2						R
Secondary air supply system *4						I
Air cleaner element *7			R		R	
Air cleaner element *8		R	R	R	R	R
Fuel filter			R		R	
Tank, fuel line and connections			I		I	
Evaporative emission control system *3						I
Ignition timing and control system *5			I		I	
Ignition timing and control system *6						I
Spark plugs *2		R	R	R	R	R
Spark plugs *9			R*10		R*10	
Distributor cap and rotor *5			I		I	
Distributor cap and rotor *6						I
Ignition wiring *5			I		I	
Ignition wiring *6						I
Positive crankcase ventilation valve *5			I		I	
Positive crankcase ventilation valve *6						I
Brake hoses, lines (Including ALB hoses and pipes for ALB models)		I	I	I	I	I
Brake fluid (Including ALB fluid for ALB models)			R		R	
Front brake discs and calipers		I	I	I	I	I
Front brake pads		Inspect every 10,000 km (6,000 miles) or 6 months				
Rear brake discs, calipers and pads			I		I	
Parking brake		I	I		I	

■ **REMARK:** These service intervals assume routine checking and replenishment has been done, as needed, by the customer.

Service at the interval of listed x 1,000 km (miles) or after that number of months, whichever comes first.	R—Replace I—Inspect After inspection, clean, adjust, repair or replace if necessary					
ITEMS	x 1,000 km	20	40	60	80	100
	x 1,000 miles	12	24	36	48	60
	months	12	24	36	48	60
Exhaust pipe and muffler		I	I	I	I	I
Suspension mounting bolts		I	I	I	I	I
Front wheel alignment		I	I	I	I	I
Steering operation, tie rod ends, steering gear box and boots		I	I		I	
ALB high pressure hose*9					R	
ALB operation*9		I	I		I	
Power steering system		I	I	I	I	I
Power steering pump belt			I		I	
Catalytic converter heat shield (with catalytic converter)						I

*1 Thereafter, replace every 2 years or 40,000 km (24,000 miles), whichever comes first.
*2 Only for cars using leaded gasoline
*3 Only for cars using unleaded gasoline and KY type
*4 Only for cars using unleaded gasoline except KQ
*5 Except for KS and KX
*6 For KS and KX
*7 For European and KQ type
*8 Except for European and KQ type
*9 Only for cars using unleaded gasoline.
*10 For KS type, replace every 2 years or 40,000 km (24,000 miles), whichever comes first after 30,000 km (18,000 miles).

CAUTION: The following items must be serviced more frequently on cars normally used under severe driving conditions. Refer to the chart below for the appropriate maintenance intervals.

"Severe driving conditions" include:
A: Repeated short distance driving
B: Driving in dusty conditions
C: Driving in severe cold weather
D: Driving in areas using road salt or other corrosive materials
E: Driving on rough and/or muddy roads
F: Towing a trailer

R—Replace
I—Inspect. After inspection, clean, adjust, repair or replace if necessary.

Condition	Maintenance item	Maintenance operation	Interval
A B • • • F	Engine oil and oil filter	R	Every 5,000 km (3,000 miles) or 3 months
• • • • • F	Transmission oil	R	Every 20,000 km (12,000 miles) or 12 months
A B • D E F	Front brake discs and calipers	I	Every 10,000 km (6,000 miles) or 6 months
A B • D E F	Rear brake discs, calipers and pads	I	Every 20,000 km (12,000 miles) or 12 months
• B C • E •	Power steering system	I	Every 10,000 km (6,000 miles) or 6 months

CAUTION: Used engine oil may cause skin cancer if repeatedly left in contact with the skin for prolonged periods. Although this is unlikely unless you handle used oil on a daily basis, it is still advisable to thoroughly wash your hands with soap and water as soon as possible after handling used oil.

Special Tools

No.	Tool Number	Description	Q'ty	Remarks
①	07912–6110001	Oil Filter Socket	1	

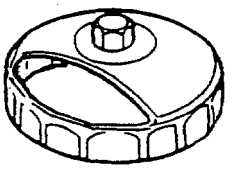

①

Engine Oil Replacement

1. Warm up the engine.

2. Drain the engine oil.

   CAUTION: Used engine oil may cause skin cancer if repeatedly left in contact with the skin for prolonged periods. Although this is unlikely unless you handle used oil on a daily basis, it is still advisable to thoroughly wash your hands with soap and water as soon as possible after handling used oil.

   NOTE: Remove the filler cap to speed draining.

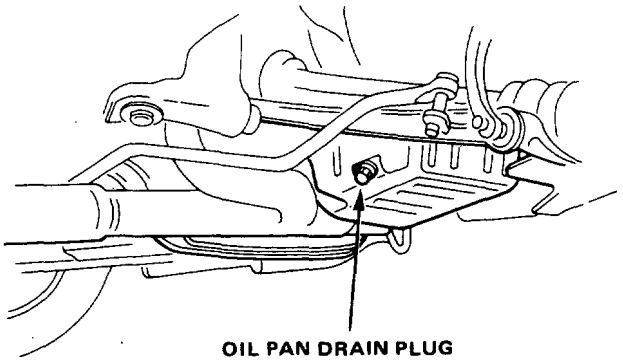

OIL PAN DRAIN PLUG
45 N·m (4.5 kg-m, 33 lb-ft)

3. Reinstall the drain plug with a new washer, and refill with the recommended oil.

Requirement	SE or SF Grade only
Capacity	4.5 ℓ (4.8 U.S. qt., 4.0 Imp. qt.) at change, including filter. 5.7 ℓ (6.0 U.S. qt., 5.0 Imp. qt.) after engine overhaul.
Change	Every 10,000 km (6,000 miles) or 6 months

NOTE: Oil filter should be replaced at each oil change.

Recommended Engine Oil (SE or SF Grade only)

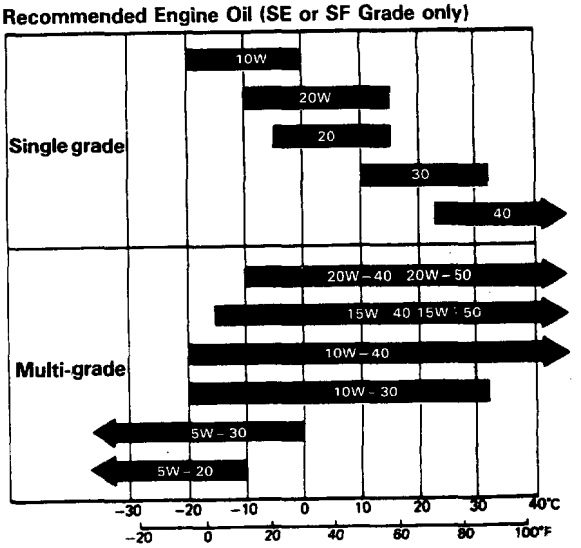

Expected Ambient Temperature before next oil change

Oil Filter Replacement

WARNING Loosen the oil filter carefully while the engine is hot, the hot oil may cause scalding.

CAUTION: Used engin oil may cause skin cancer if repeatedly left in contact with the skin for prolonged periods. Although this is unlikely unless you handle used oil on a daily basis, it is still advisable to throughly wash your hands with soap and water as soon as possible after handling used oil.

1. Remove the oil filter with the special oil filter socket.

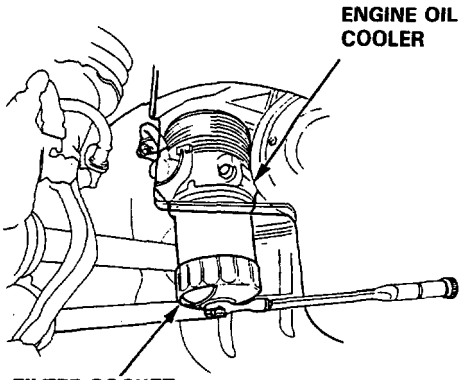

2. Inspect the threads and rubber seal on the new filter. Wipe off seat on oil filter base, then apply a light coat of oil to the rubber seal, and install filter.

3. After the rubber seal is seated, tighten the filter by turning approximately one turn.

   NOTE: Use only filters with a built-in bypass system.

Torque: One turn (22 N•m (2.2 kg-m, 16 lb-ft))

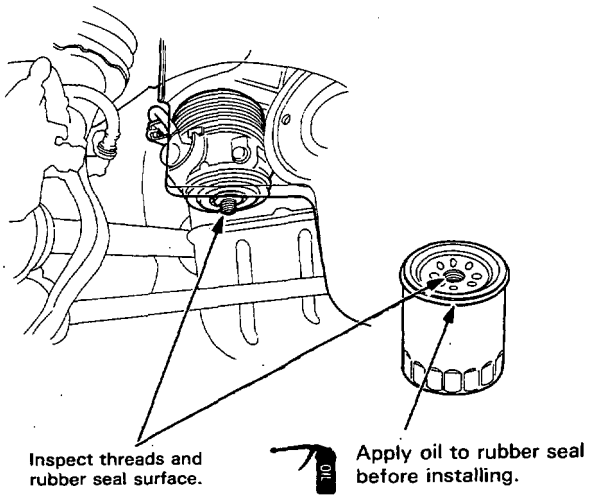

4. Start the engine and check the filter for oil leakage.

Special Tools

No.	Tool Number	Description	Q'ty	Remarks
①	07JAB–0010000	Crank Pulley Holder Set	1	for crankshaft pulley bolt
①-1	07JAA–0010200	Socket Wrench, 19 mm	(1)	Component tools for automatic transmission equipped model
①-2	07JAB–0010100	Pulley Holder Attachment	(1)	
①-3	07JAB–0010200	Handle	(1)	
②	07JAB–0010300	Pulley Holder Attachment, Hex 45 mm	1	for manual transmission equipped model

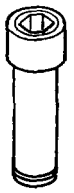

①-1

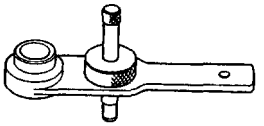

①-2

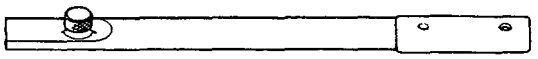

①-3

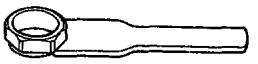

②

Timing Belt

Illustrated Index

NOTE:
- Before removing, mark direction of rotation.
- Refer to base manual for:
  positioning of the crank and pulley before installing the timing belt.
  alternator belt adjustment.
  power steering pump belt adjustment.
  air conditioning compressor belt adjustment.

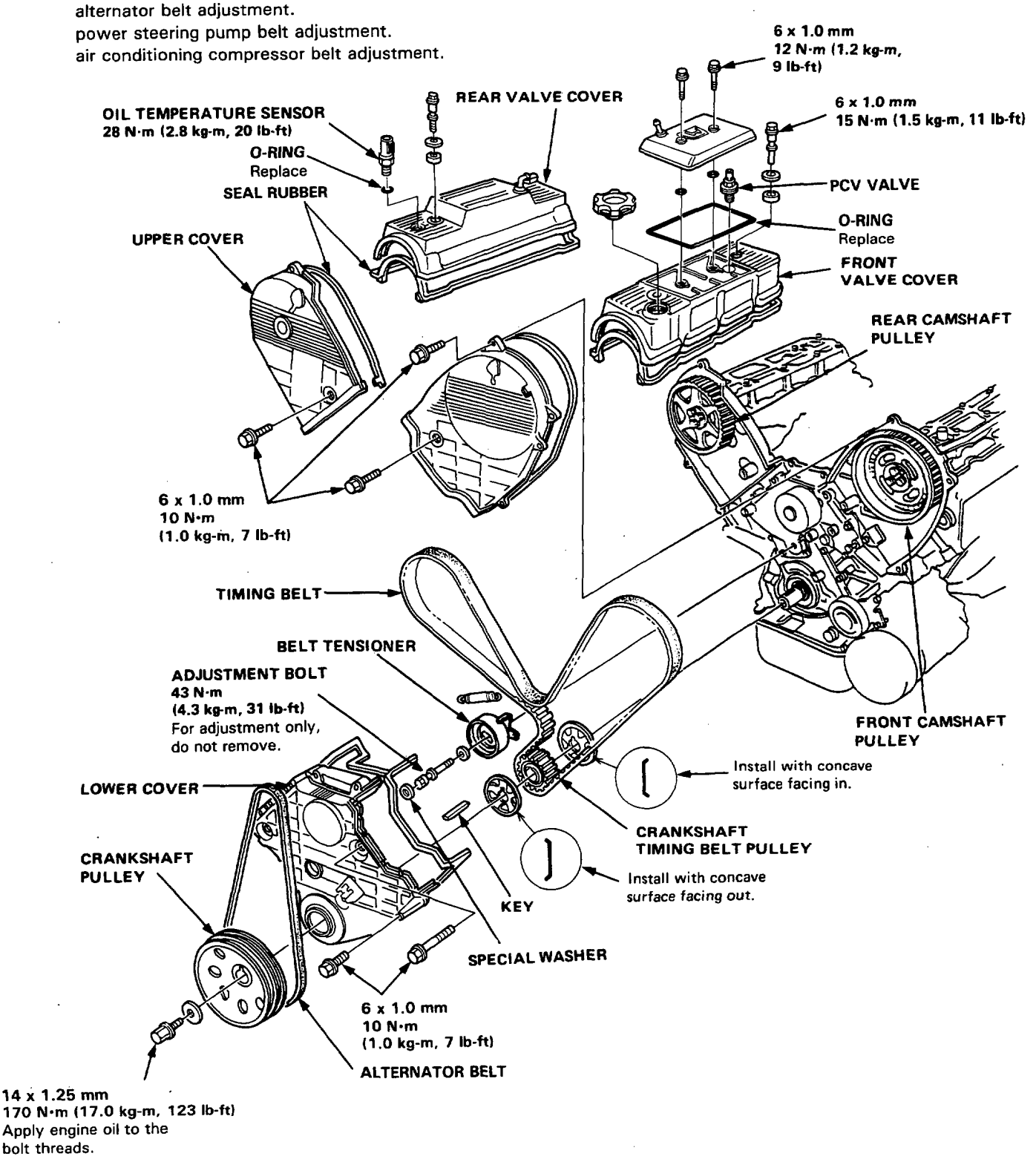

Timing Belt

Crankshaft Pulley Bolt Replacement

Automatic Transmission

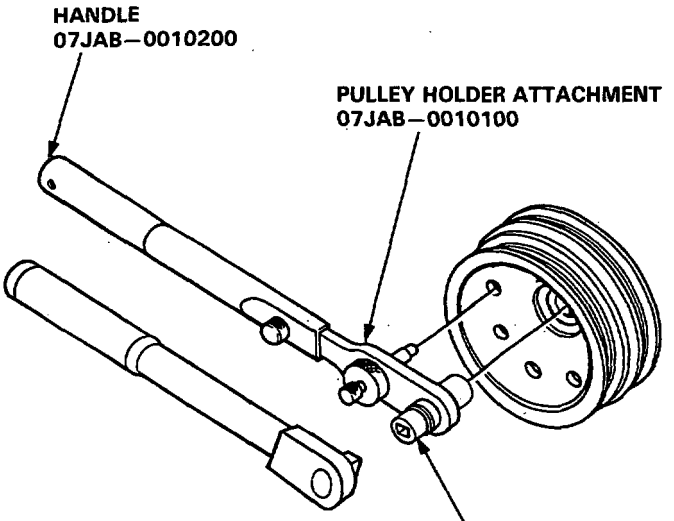

SOCKET WRENCH, 19 mm
07JAA–0010200
Torque: 170 N•m, (17.0 kg-m, 123 lb-ft)
Apply molybdenum disulfide to the mating surface of the socket and attachment.

Manual Transmission

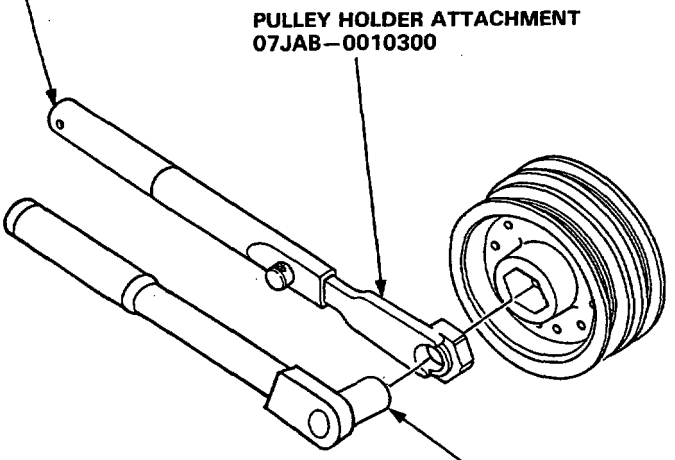

SOCKET WRENCH, 19 mm
07JAA–0010200
Torque: 170 N•m, (17.0 kg-m, 123 lb-ft)

Engine Removal/Installation

Installation

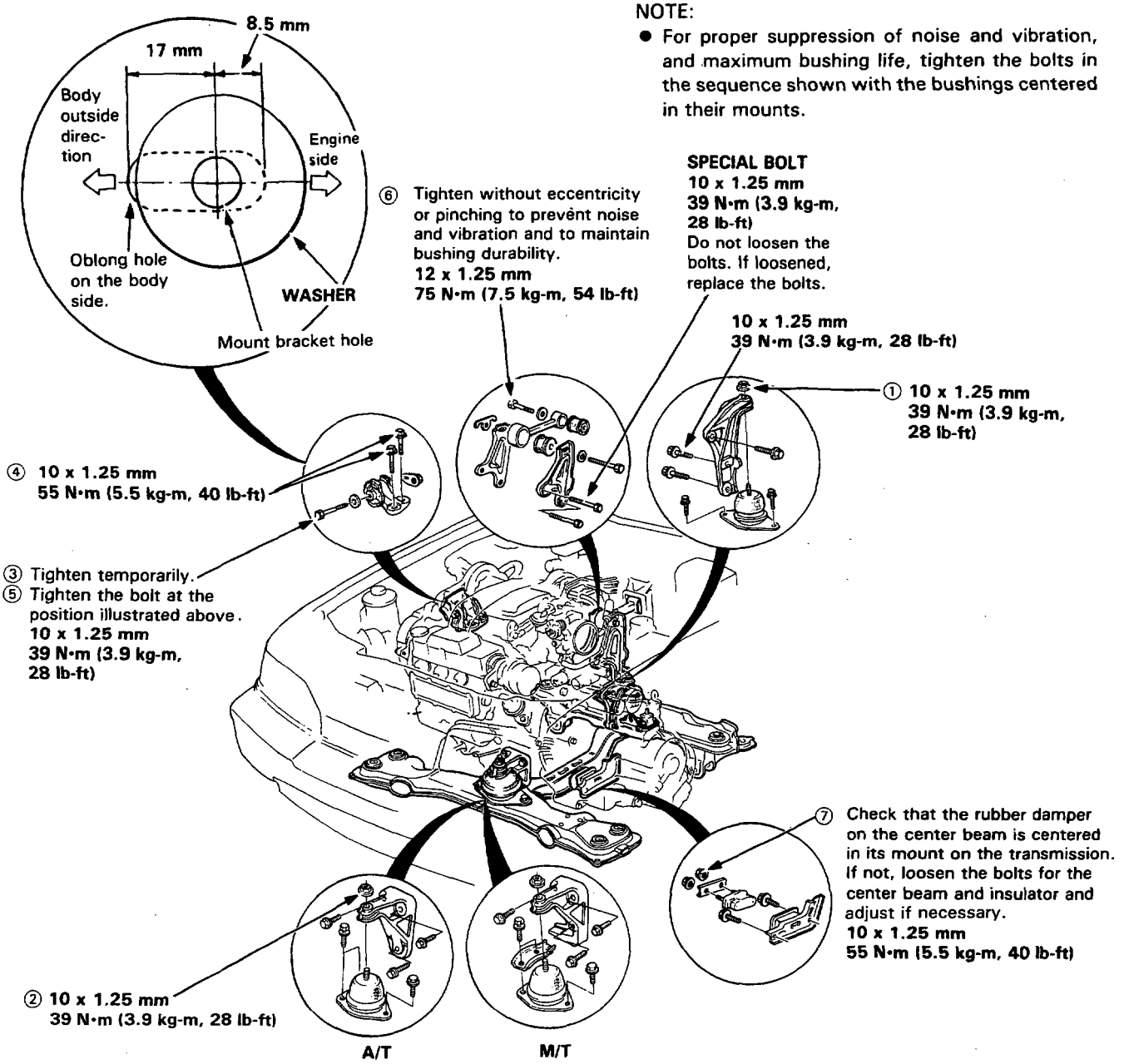

NOTE:

- For proper suppression of noise and vibration, and maximum bushing life, tighten the bolts in the sequence shown with the bushings centered in their mounts.

Install the engine in the reverse order of removal.

After the engine is in place:

- Torque engine mount bolts in sequence shown.

CAUTION: Failure to tighten the bolts in the proper sequence can cause excessive noise and vibration, and reduce bushing life; check that the bushings are not twisted or offset.

- Check that the spring clip on the end of each driveshaft clicks into the differential.

CAUTION: Use new spring clips on installation.

- Bleed air from the cooling system at the bleed bolt with the heater valve open.
- Adjust the throttle cable tension.
- Adjust the alternator belt tension.
- Check the clutch pedal free play.
- Check that the transmission shifts into gear smoothly.
- Connect the air conditioning hoses, wiring and V-belt.
- Clean battery posts and cable terminals with sandpaper, assemble, then apply grease to prevent corrosion.

Radiator

Replacement

WARNING System is under high pressure when engine is hot. To avoid danger of releasing scalding coolant, remove cap only when engine is cool.

Total Cooling System Capacity (Incl. heater, and reservoir tank):
5 M/T: 8.8 liters (9.3 U.S. qt., 7.7 Imp. qt.)
4 A/T: 8.7 liters (9.2 U.S. qt., 7.7 Imp. qt.)

NOTE:
- Check all cooling system hoses for damage, leaks or deterioration and replace if necessary.
- Check all hose clamps and retighten if necessary.
- Use new O-rings when reassembling.

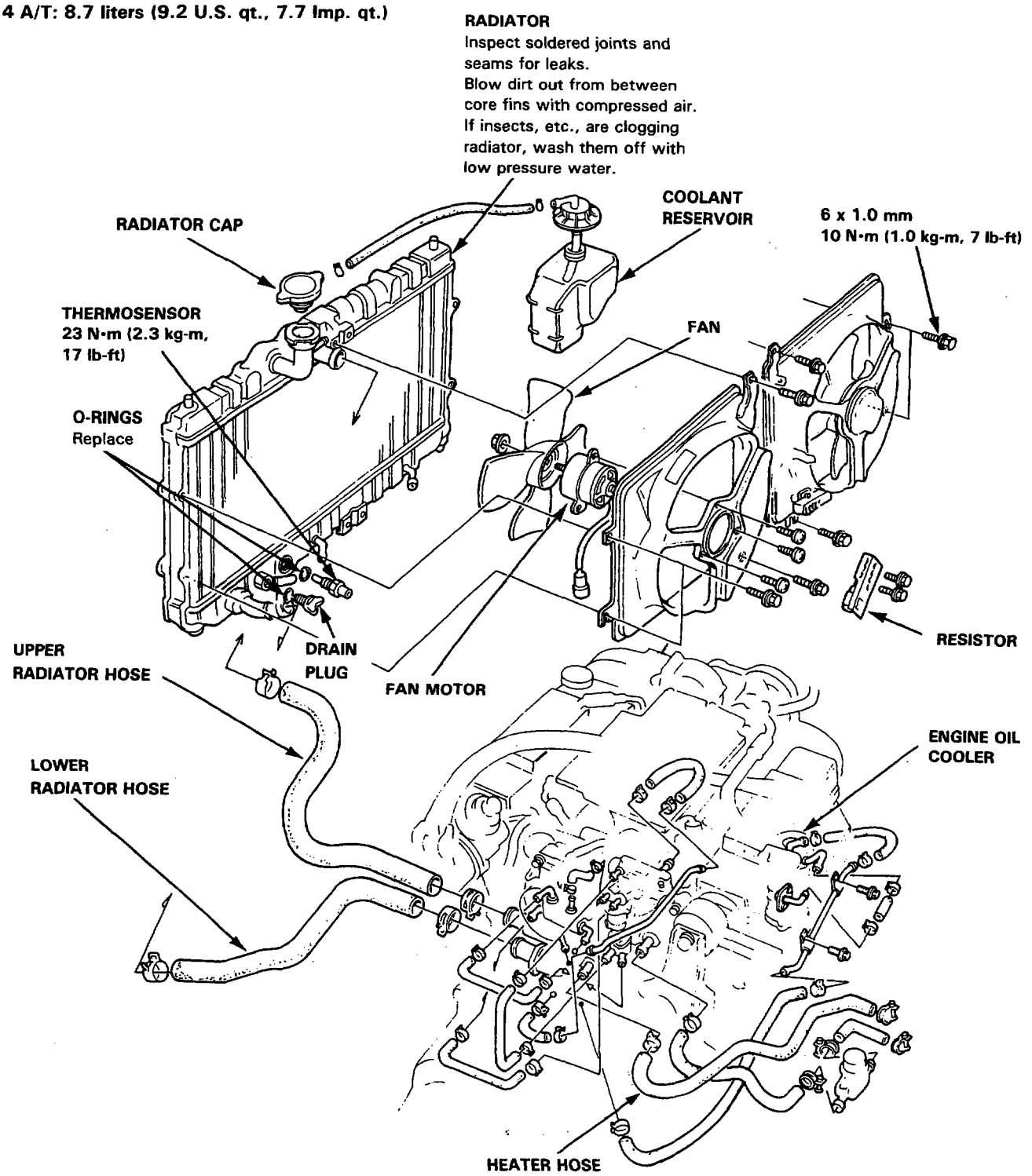

Water Pump

Replacement

NOTE: Use new bolts and O-ring when reassembling.

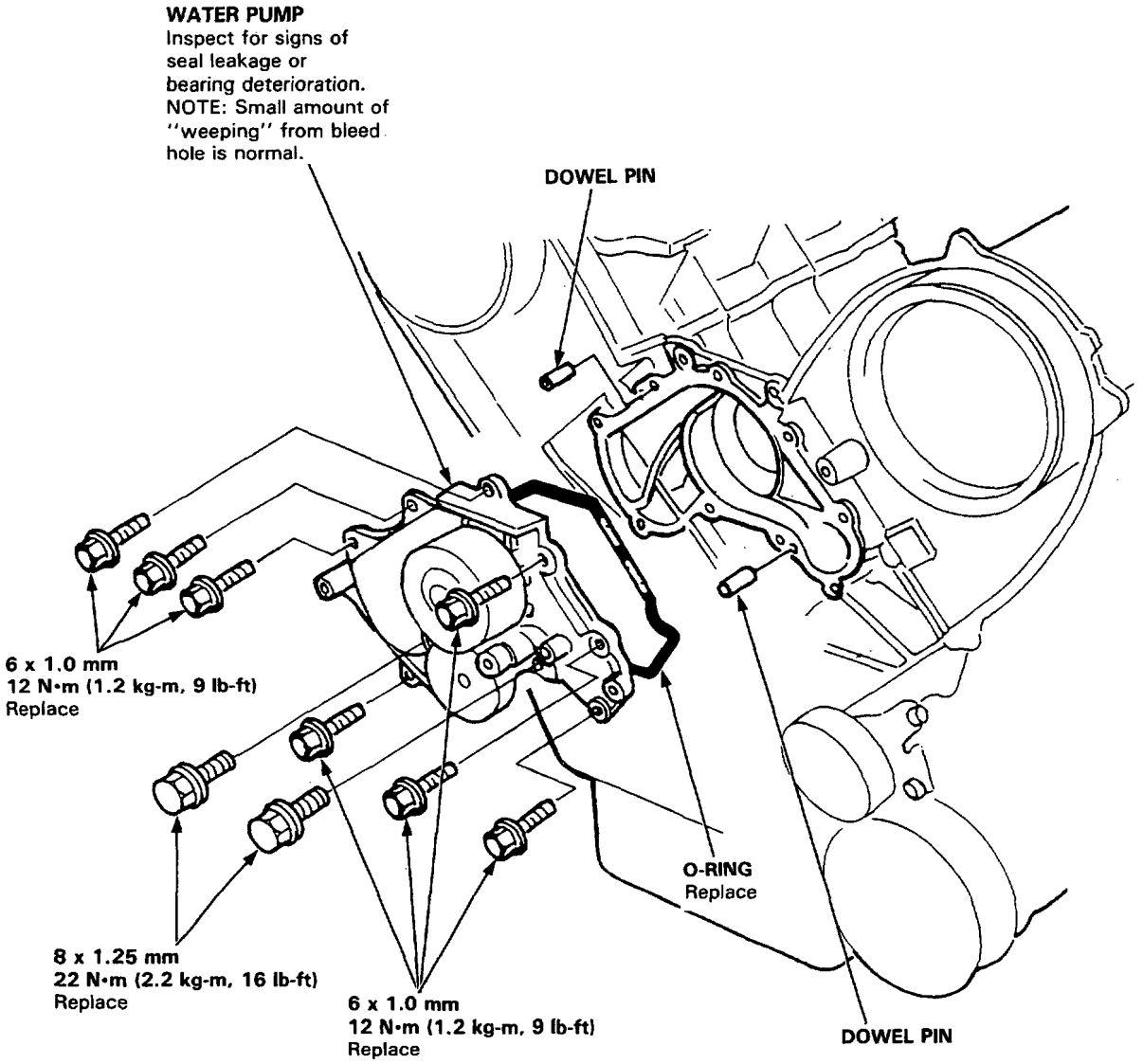

Engine Block

Illustrated Index

NOTE:
- Lubricate all internal parts with engine oil during reassembly.
- Use Honda Genuine liquid gasket, PART NO. OY740—99986.

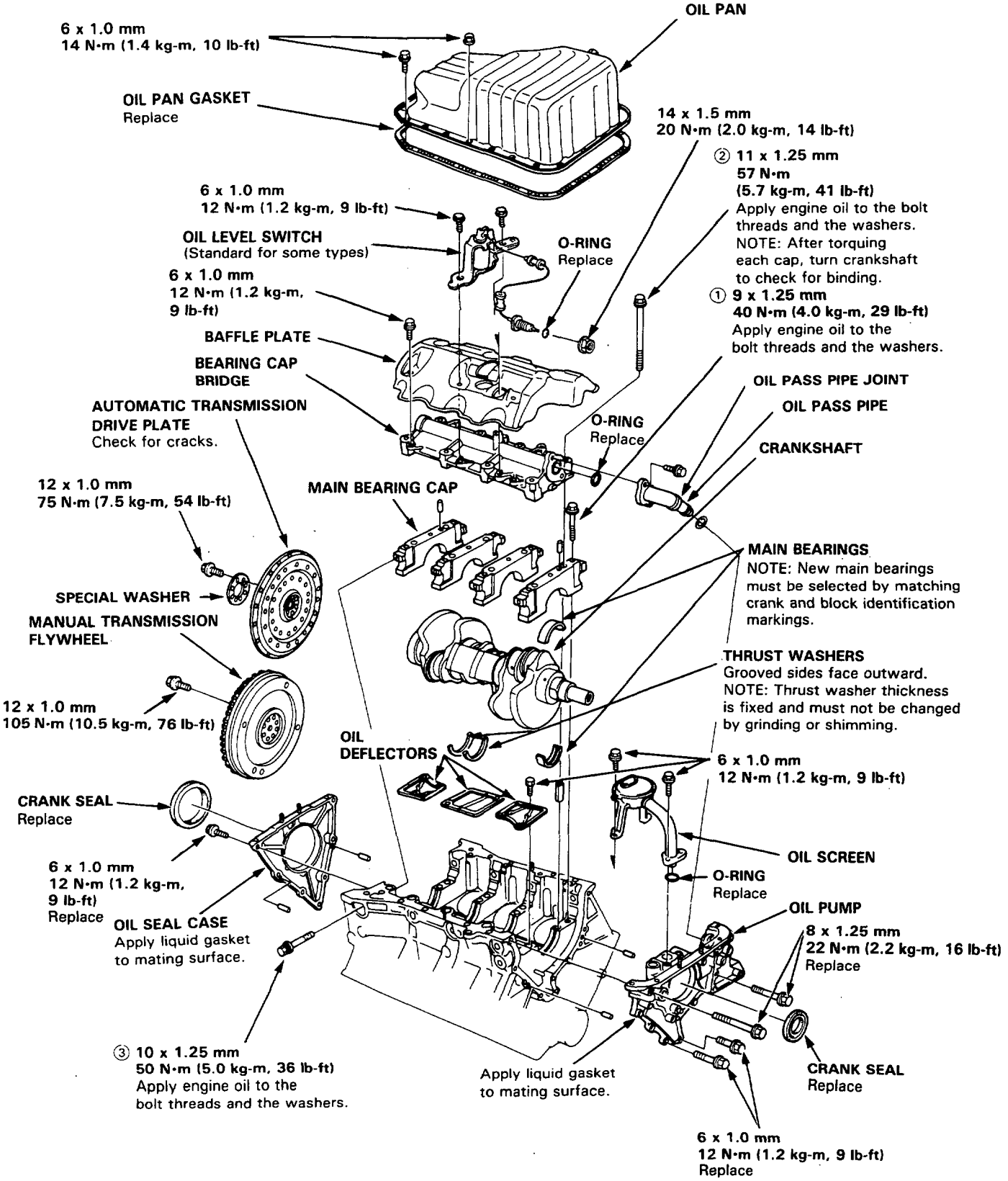

Special Tools

Ref. No.	Tool Number	Description	Q'ty	Remarks
①	07979—PJ40001	Magnet Stand Base	1	07979—PJ40000
②	07GAJ—PG20101	Mainshaft Clearance Inspection Tool	1	may also be used.

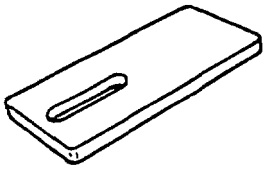

①

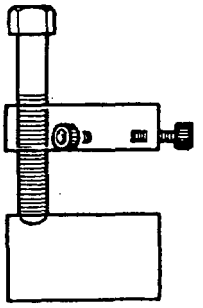

②

Mainshaft Thrust Shim

Adjustment

1. Remove the thrust shim and oil guide plate from the transmission housing.
2. Install the 3–4 synchro hub, spacer collar, 5th synchro hub, and ball bearing on the mainshaft; install the above assembly in the transmission housing.

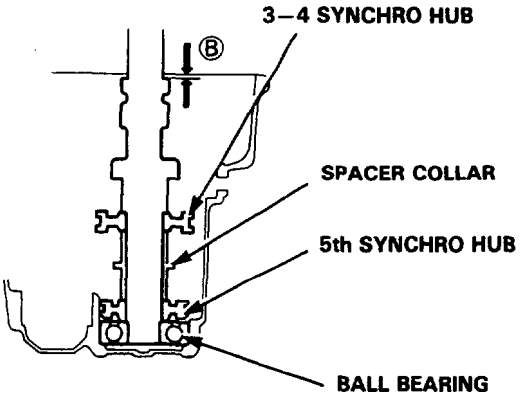

3. Measure the distance Ⓑ between the end of the transmission housing and mainshaft.

   NOTE:
   - Use a straight edge and vernier caliper.
   - Measure at three locations and average the readings.

4. Measure the distance Ⓒ between the surfaces of the clutch housing and bearing inner race.

   NOTE:
   - Use a depth gauge.
   - Measure at three locations and average the readings.

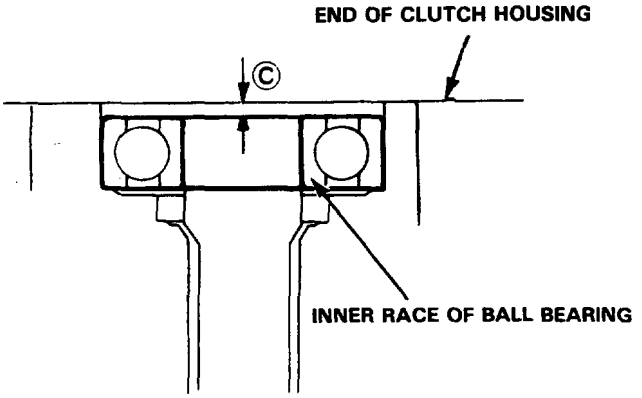

5. Select the proper shim from the formula and chart in the next column.

   NOTE: Do not use more than one shim.

Shim Selection Formula:

From the measurements you made in steps 3 and 4:

1. Add the distance Ⓒ (step 4) to the distance Ⓑ (step 3).
2. From this number, subtract 0.93 (which is midpoint the flex range of the clutch housing bearing spring washer).
3. Take this number and compare it to the available shim sizes in the chart.

   For example:

B: 2.39	2.61
+ C: 0.22	– 0.93
= 2.61	1.68

- Try the 1.68 mm shim.

	P/N	THICKNESS
A	23941–PK5–000	1.20 mm (0.0472 in)
B	23942–PK5–000	1.23 mm (0.0484 in)
C	23943–PK5–000	1.26 mm (0.0496 in)
D	23944–PK5–000	1.29 mm (0.0508 in)
E	23945–PK5–000	1.32 mm (0.0520 in)
F	23946–PK5–000	1.35 mm (0.0531 in)
G	23947–PK5–000	1.38 mm (0.0543 in)
H	23948–PK5–000	1.41 mm (0.0555 in)
I	23949–PK5–000	1.44 mm (0.0567 in)
J	23950–PK5–000	1.47 mm (0.0579 in)
K	23951–PK5–000	1.50 mm (0.0591 in)
L	23952–PK5–000	1.53 mm (0.0602 in)
M	23953–PK5–000	1.56 mm (0.0614 in)
N	23954–PK5–000	1.59 mm (0.0626 in)
O	23955–PK5–000	1.62 mm (0.0638 in)
P	23956–PK5–000	1.65 mm (0.0650 in)
Q	23957–PK5–000	1.68 mm (0.0661 in)
R	23958–PK5–000	1.71 mm (0.0673 in)
S	23959–PK5–000	1.74 mm (0.0685 in)
T	23960–PK5–000	1.77 mm (0.0697 in)
U	23961–PK5–000	1.80 mm (0.0709 in)
V	23962–PK5–000	1.83 mm (0.0720 in)
W	23963–PK5–000	1.86 mm (0.0732 in)
X	23964–PK5–000	1.89 mm (0.0744 in)

(cont'd)

Mainshaft Thrust Shim

Adjustment (cont'd)

	P/N	THICKNESS
Y	23965–PK5–000	1.92 mm (0.0756 in)
Z	23966–PK5–000	1.95 mm (0.0768 in)
AA	23967–PK5–000	1.98 mm (0.0780 in)
AB	23968–PK5–000	2.01 mm (0.0791 in)
AC	23969–PK5–000	2.04 mm (0.0803 in)
AD	23970–PK5–000	2.07 mm (0.0815 in)
AE	23971–PK5–000	2.10 mm (0.0827 in)
AF	23972–PK5–000	2.13 mm (0.0839 in)
AG	23973–PK5–000	2.16 mm (0.0850 in)
AH	23974–PK5–000	2.19 mm (0.0862 in)
AI	23975–PK5–000	2.22 mm (0.0874 in)
AJ	23976–PK5–000	2.25 mm (0.0886 in)
AK	23977–PK5–000	2.28 mm (0.0898 in)
AL	23978–PK5–000	2.31 mm (0.0909 in)
AM	23979–PK5–000	2.34 mm (0.0921 in)
AN	23980–PK5–000	2.37 mm (0.0933 in)

4. Check the thrust clearance in the manner described below.

–1. Install the shim selected in the transmission housing.

–2. Install the spring washer in the mainshaft.

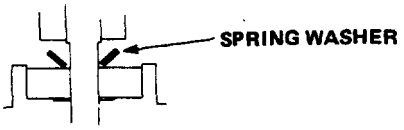

NOTE.
- Clean the spring and shim thoroughly before installation.
- Install the spring and shim properly.

–3. Install the mainshaft in the clutch housing.

–4. Place the transmission housing over the mainshaft and onto the clutch housing.

–5. Tighten the clutch and transmission housings with several 10 mm bolts.

–6. Tap the mainshaft with a plastic hammer.

–7. Attach the collar and shaft holder of the special tool (Mainshaft Clearance Inspection Tool) to the mainshaft and tighten the three bolts.

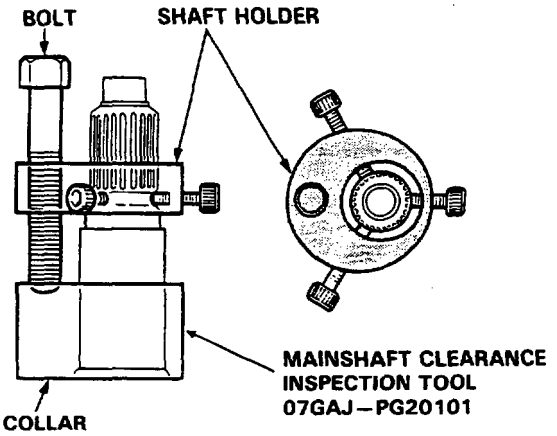

CAUTION: Screw the three bolts into the groove below the splines. Never screw into the splined area.

–8. Attach the special tool (magnet stand base) to the clutch housing and set the dial gauge on the top of the mainshaft.

–9. Turn the bolt clockwise and measure the clearance.

CAUTION:
- **Do not turn the bolt more than 60 degrees after the needle of the gauge stops moving. Be careful not to overtighten.**
- **Measurement should be made at room temperature.**

–10. Clearance is correct if the reading is between 0.10–0.16 mm (0.0039–0.0063 in.).
If not, re-check necessary shim thickness.

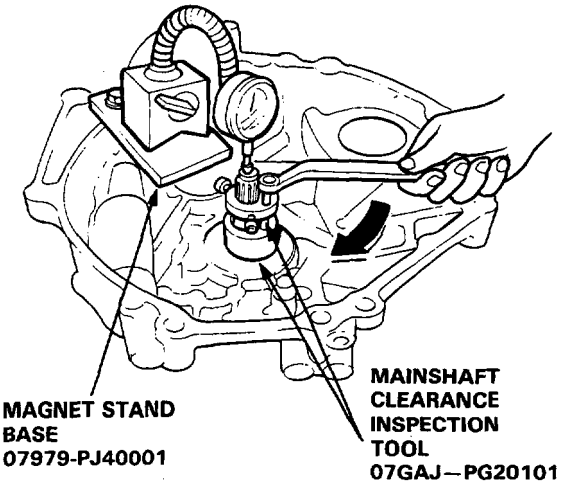

Clearance Inspection

NOTE: Five types of 36 x 44 x 29 mm collars and sixteen types of thrust washers for 1st gear are available for the adjustment of the clearance between the gears on the countershaft.

1. Assemble the gears, spacer collars, thrust washer, synchro hub, synchro ring, etc. as shown below.

   CAUTION: Locknut has left-hand threads.

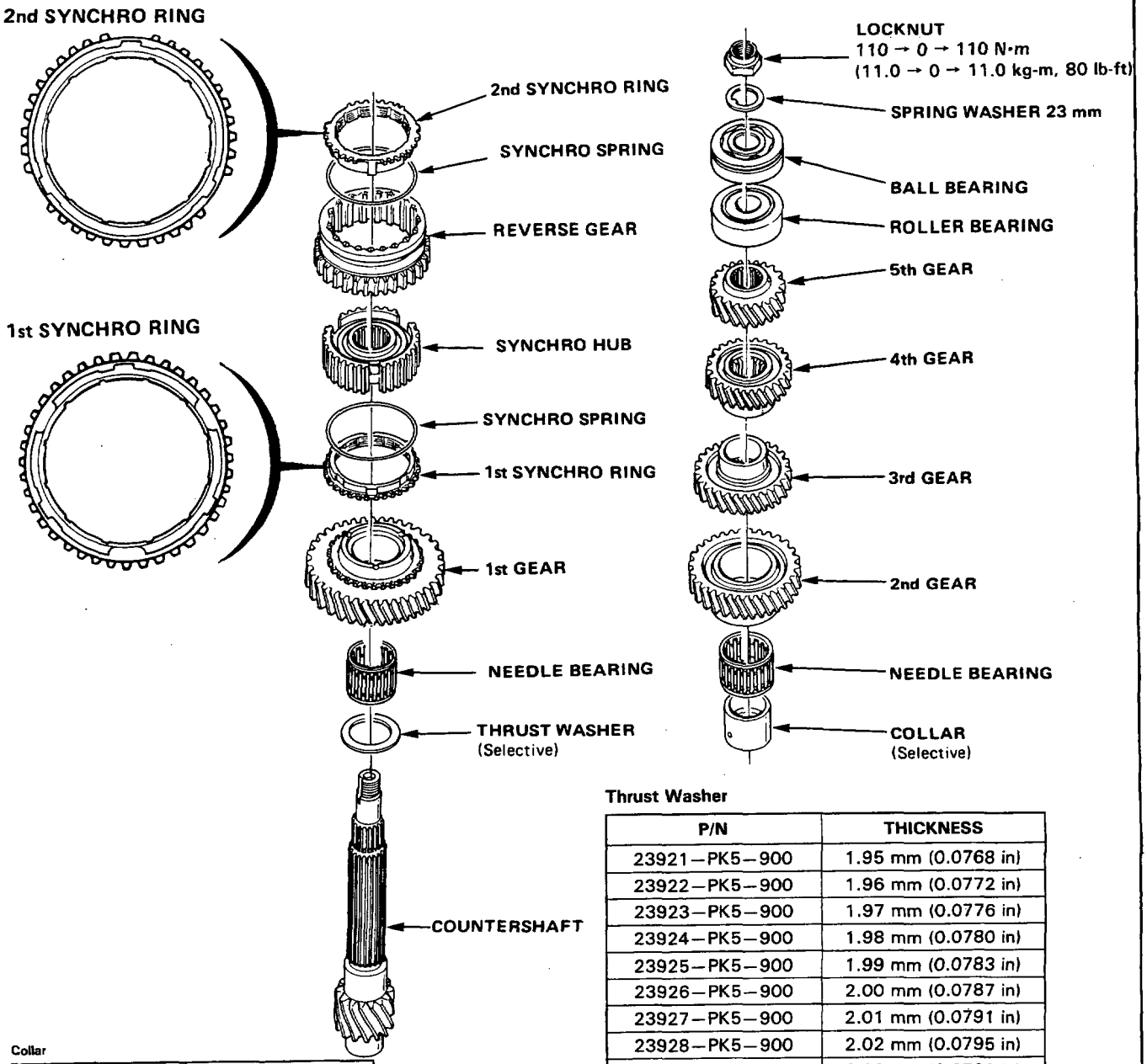

Thrust Washer

P/N	THICKNESS
23921–PK5–900	1.95 mm (0.0768 in)
23922–PK5–900	1.96 mm (0.0772 in)
23923–PK5–900	1.97 mm (0.0776 in)
23924–PK5–900	1.98 mm (0.0780 in)
23925–PK5–900	1.99 mm (0.0783 in)
23926–PK5–900	2.00 mm (0.0787 in)
23927–PK5–900	2.01 mm (0.0791 in)
23928–PK5–900	2.02 mm (0.0795 in)
23929–PK5–900	2.03 mm (0.0799 in)
23930–PK5–900	2.04 mm (0.0803 in)
23931–PK5–900	2.05 mm (0.0807 in)
23932–PK5–900	2.06 mm (0.0811 in)
23933–PK5–900	2.07 mm (0.0815 in)
23934–PK5–900	2.08 mm (0.0819 in)
23935–PK5–900	2.09 mm (0.0823 in)
23936–PK5–900	2.10 mm (0.0827 in)

(cont'd)

Collar

P/N	THICKNESS
23911–PG2–000	29.03–29.05 mm (1.1429–1.1437 in)
23912–PG2–000	29.01–29.03 mm (1.1421–1.1429 in)
23913–PG2–000	28.99–29.01 mm (1.1413–1.1421 in)
23914–PG2–000	28.97–28.99 mm (1.1405–1.1413 in)
23915–PG2–000	28.95–28.97 mm (1.1398–1.1405 in)

Clearance Inspection (cont'd)

2. Torque countershaft locknut.
   Tighten to specified torque, then loosen and re-tighten to same torque.

   110 N·m (11.0 kg-m, 80 lb-ft) → 0 → 110 N·m (11.0 kg-m, 80 lb-ft)

   CAUTION: The countershaft locknut has left-hand threads.

   NOTE: Put pieces of wood between the vise and the mainshaft.

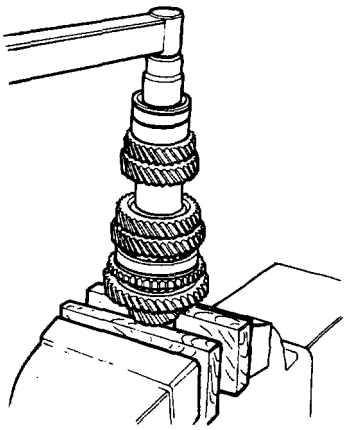

3. Measure the clearance between 1st gear and the thrust washer.

   Standard: 0.04–0.06 mm (0.0016–0.0024 in.)
   Service Limit: 0.18 mm (0.007 in.)

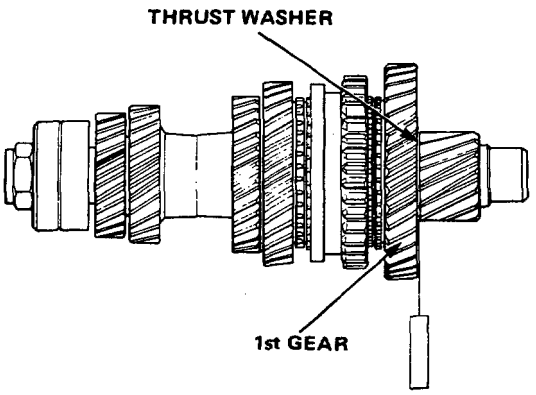

4. If the clearance is out of tolerance, select the appropriate thrust washer or spacer collar for the correct clearance from the charts on page 8-5.

5. Measure the clearance between the 2nd gear and 3rd gear.

   Standard: 0.03–0.06 mm (0.0012–0.0024 in.)
   Service Limit: 0.18 mm (0.007 in.)

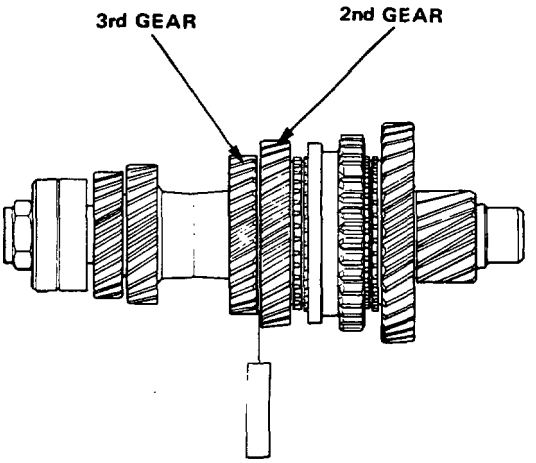

6. If the clearance is out of tolerance, select the appropriate thrust washer or spacer collar for the correct clearance from the charts on page 8-5.

Component Locations

LHD:

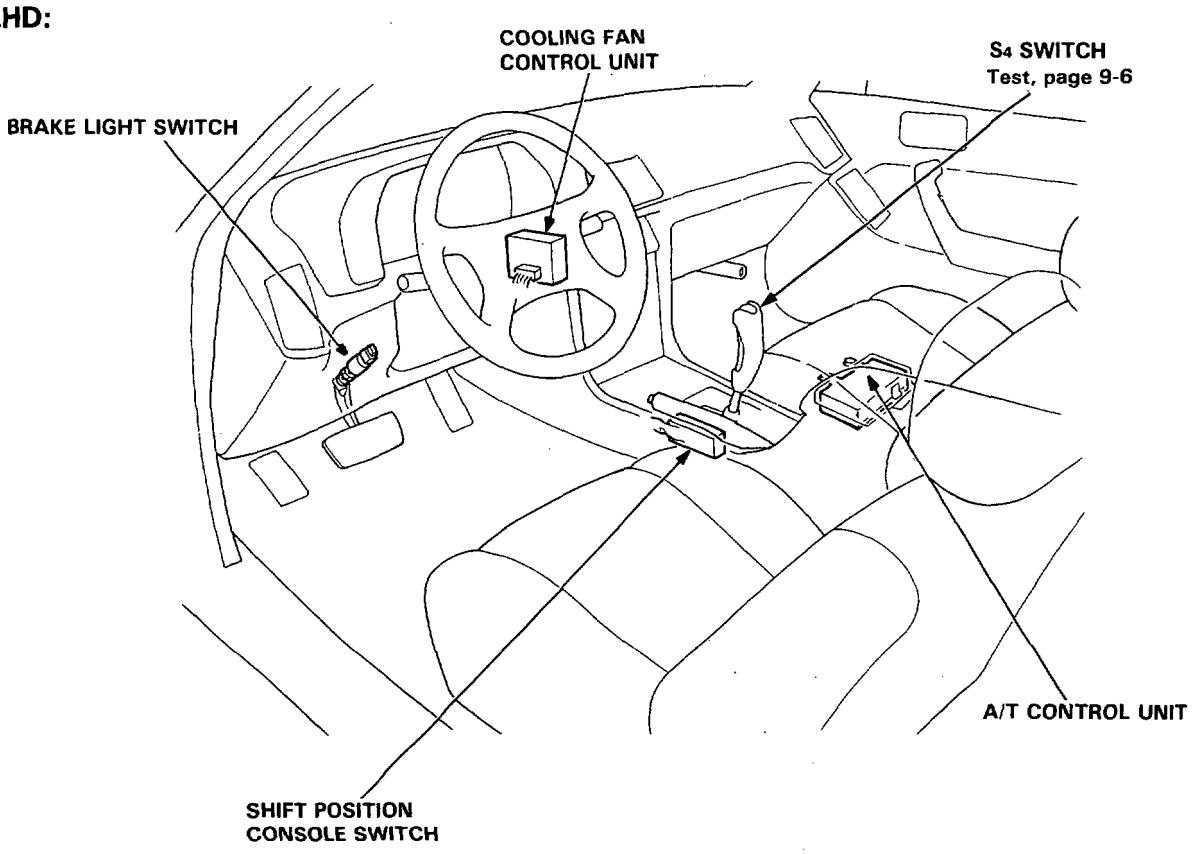

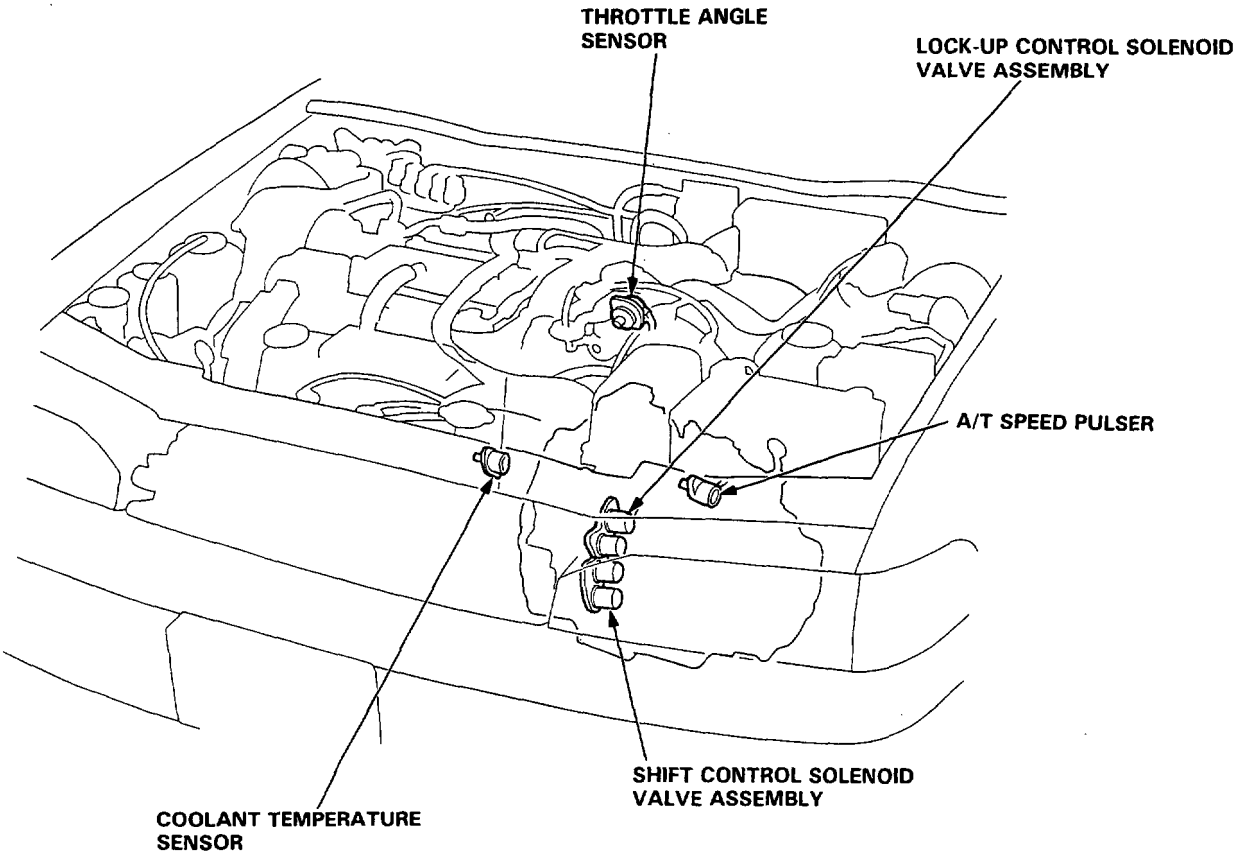

RHD:

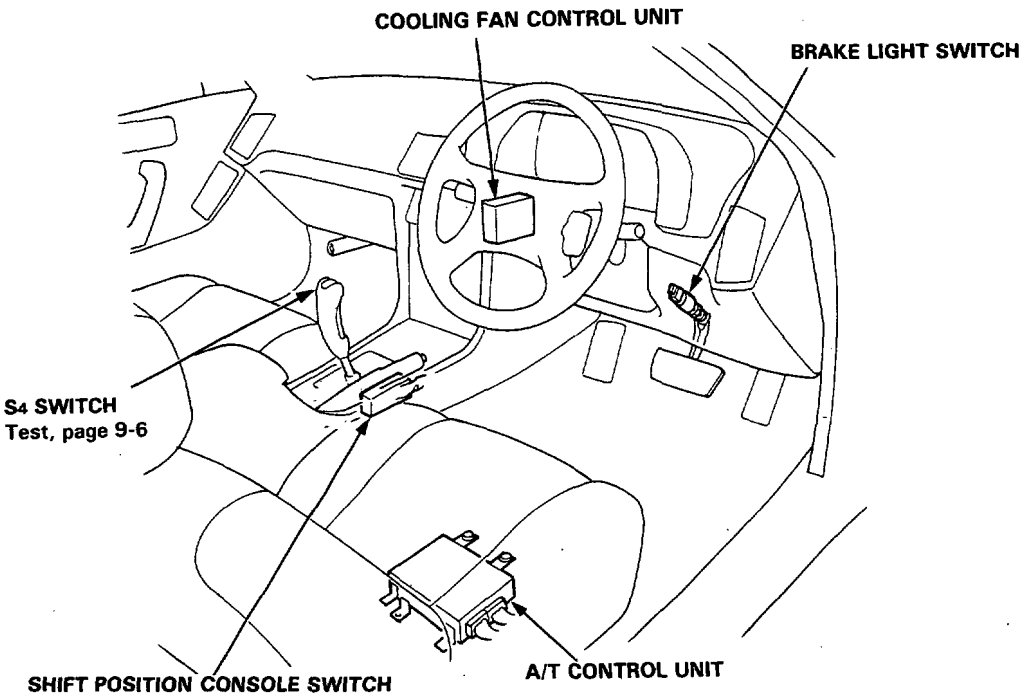
COOLING FAN CONTROL UNIT
BRAKE LIGHT SWITCH
S4 SWITCH
Test, page 9-6
SHIFT POSITION CONSOLE SWITCH
A/T CONTROL UNIT

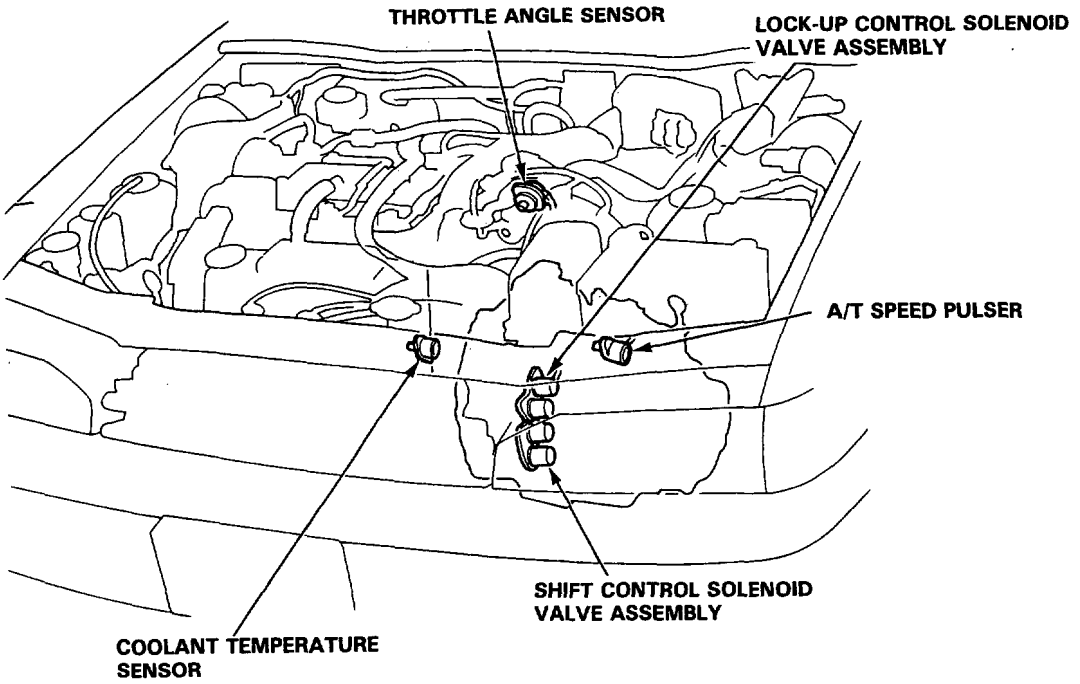
THROTTLE ANGLE SENSOR
LOCK-UP CONTROL SOLENOID
VALVE ASSEMBLY
A/T SPEED PULSER
SHIFT CONTROL SOLENOID
VALVE ASSEMBLY
COOLANT TEMPERATURE
SENSOR

Circuit Diagram

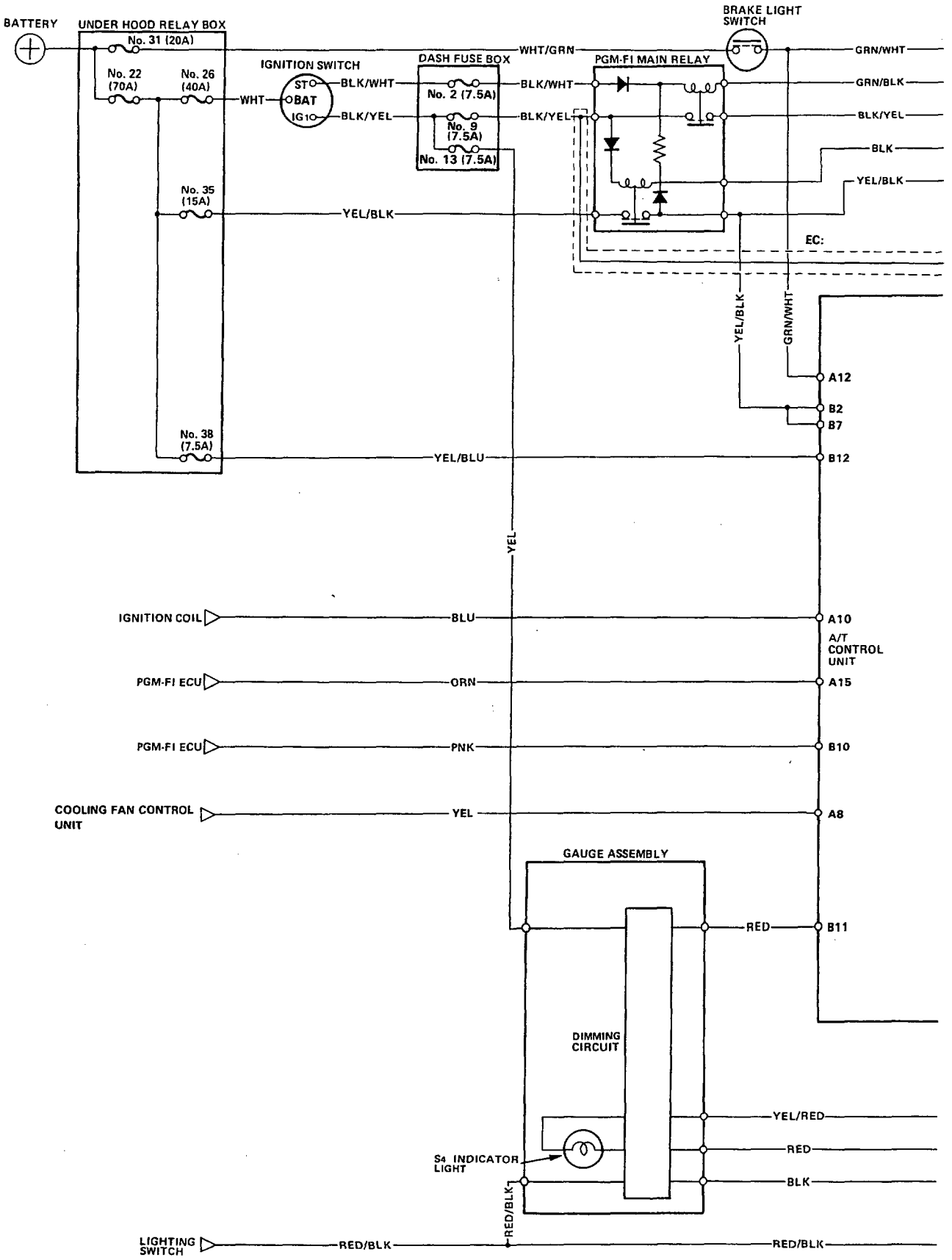

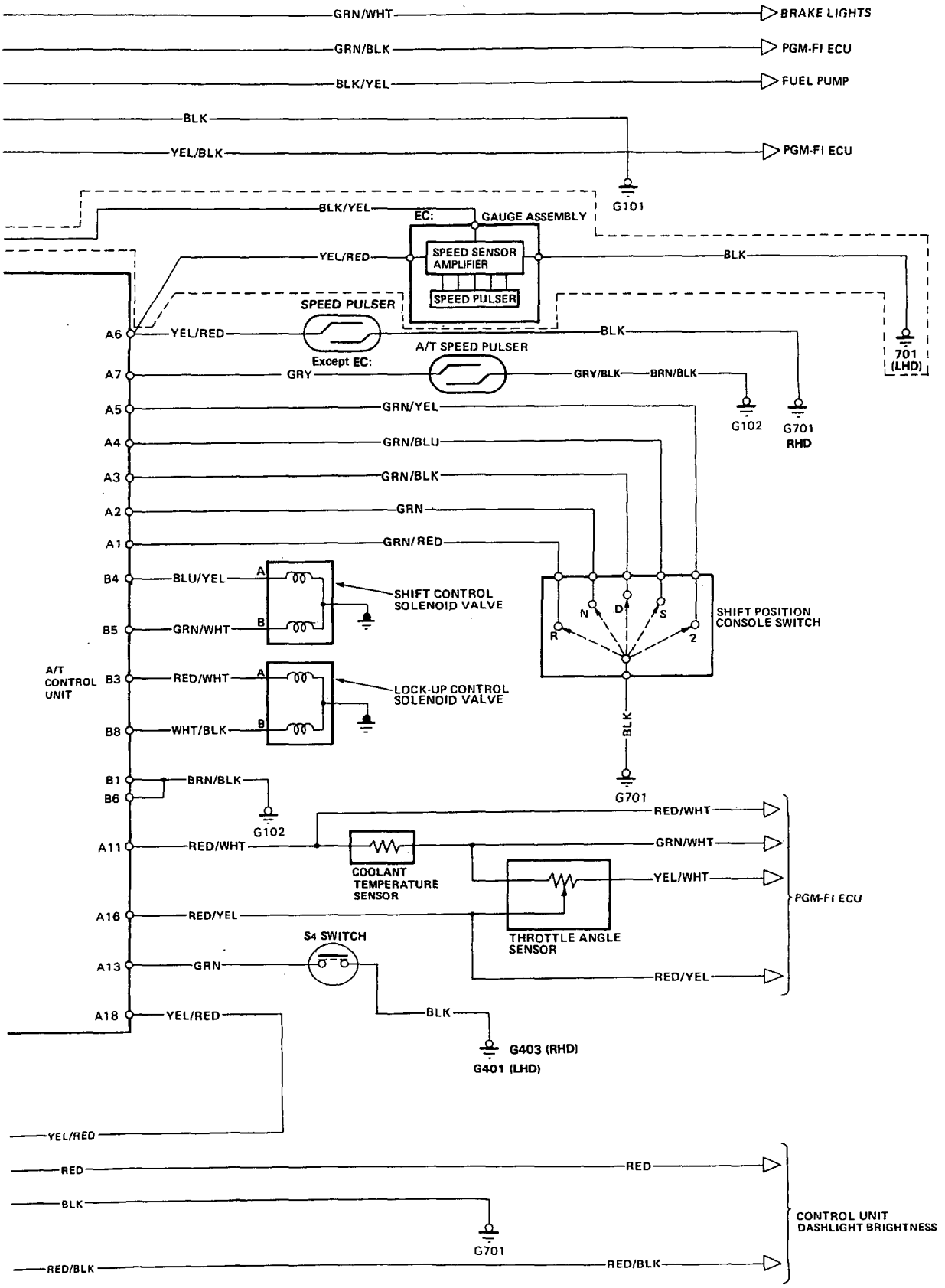
GRN/WHT
BRAKE LIGHTS
GRN/BLK
PGM-FI ECU
BLK/YEL
FUEL PUMP
BLK
YEL/BLK
PGM-FI ECU
G101
BLK/YEL
EC:
GAUGE ASSEMBLY
YEL/RED
SPEED SENSOR AMPLIFIER
SPEED PULSER
BLK
701 (LHD)
SPEED PULSER
A6
YEL/RED
BLK
Except EC:
A/T SPEED PULSER
A7
GRY
GRY/BLK
BRN/BLK
G102
G701 RHD
A5
GRN/YEL
A4
GRN/BLU
A3
GRN/BLK
A2
GRN
A1
GRN/RED
B4
BLU/YEL
SHIFT CONTROL SOLENOID VALVE
B5
GRN/WHT
N
D
S
R
2
SHIFT POSITION CONSOLE SWITCH
A/T CONTROL UNIT
B3
RED/WHT
LOCK-UP CONTROL SOLENOID VALVE
B8
WHT/BLK
BLK
G701
B1
B6
BRN/BLK
G102
RED/WHT
A11
RED/WHT
GRN/WHT
COOLANT TEMPERATURE SENSOR
YEL/WHT
PGM-FI ECU
A16
RED/YEL
THROTTLE ANGLE SENSOR
S4 SWITCH
A13
GRN
RED/YEL
A18
YEL/RED
BLK
G403 (RHD)
G401 (LHD)
YEL/RED
RED
RED
BLK
G701
CONTROL UNIT DASHLIGHT BRIGHTNESS
RED/BLK
RED/BLK

S_4 Switch

Test

1. Remove the center console.
2. Disconnect the switch connector.
3. Check for continuity between A and B terminals. There should be continuity when the switch is presed.

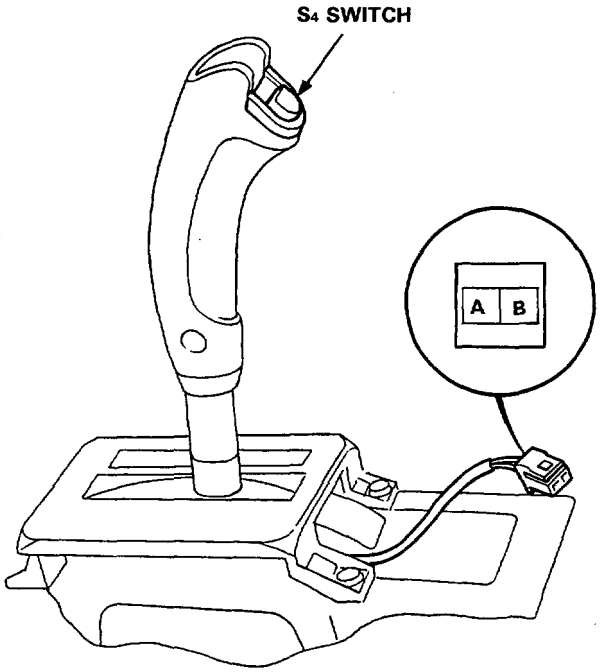

Gearshift Selector

Disassembly/Reassembly

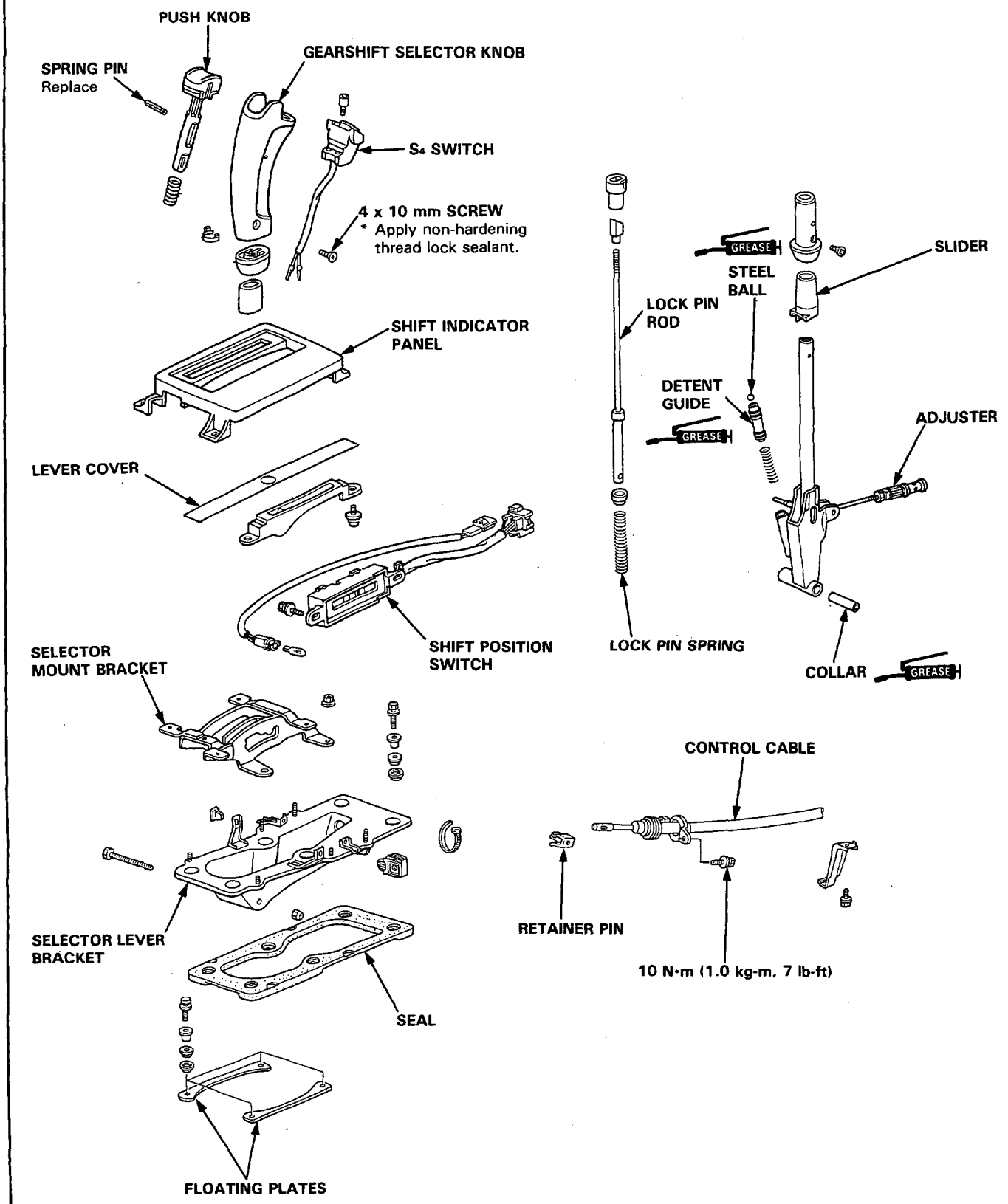

Symptom-to-Component Chart

Hydraulic System

PROBLEM	REFER TO
Engine runs, but car does not move in any gear.	1,3,4,5,7,8 9,39
Car moves in 2, but not in S or D.	8,10,11,12 58
Car moves in S or D, but not in 2.	8,13,14
Car moves in S,D, or 2, but not in R.	5,8,15,36
Poor acceleration Engine races when starting off in S: —Stall rpm high in S,D and 2 —Stall rpm high in S and D —Stall rpm high in 2 —Stall rpm normal —Stall rpm low	 1,3,4,8,44 47 8,10,12 8,14 16 17,18,35,50 51
Excessive idle vibration	3,35,39,50 51
Shift-up speed is too fast or slow.	57
Jumps from 1st to 3rd in S.	57
Jumps from 1st to 4th in D.	54,57
Shift-up point too early/late: —1st to 2nd, 2nd to 3rd, 3rd to 4th —1st to 2nd —2nd to 3rd —3rd to 4th	 57 22,53,57 23,54,57 24,53,57
Harsh upshift from 1st to 2nd	14,19,23
Harsh upshift from 2nd to 3rd	19,24,26,33
Harsh upshift from 3rd to 4th	19,25,34,35
Harsh downshift from 2nd to 1st	19,23,26,40
Harsh downshift from 3rd to 2nd	19,24,30,41
Harsh downshift from 4th to 3rd	19,25,42
Engine races when shifting from 2nd to 3rd. (Shift point OK)	19,24,26,27 31,33
Engine races when shifting from 3rd to 4th. (Shift point OK)	19,25,30,34
Excessive shock when shifting from 2nd to 3rd (Shift point OK)	19,24,29,41 48
Excessive shock when shifting from 3rd to 4th (Shift point OK)	19,30,42,48
Car creeps forward in N. (Shift cable adjusted properly.)	12,14,16,33 36,37,38
Excessive time lag from N to S/D. (Shift cable adjusted properly.)	12,28
Excessive time lag from N to R (Shift cable adjusted properly.)	5,21,34

	PROBABLE CAUSE
1	ATF level too low
2	ATF level too high
3	Oil pump seized, gear damaged, foreign matter stuck in gear
4	Regulator valve stuck or spring weak/damaged
5	Servo shaft stuck
6	3rd gears worn/damaged
7	Mainshaft damaged
8	Shift cable misadjusted, cut or damaged
9	Final gear worn/damaged
10	Countershaft and one-way clutch seized/damaged
11	1st gears worn/damaged
12	1st clutch faulty a. Clutch piston stuck b. Foreign material stuck in clutch check valve c. Clutch O-ring worn/damaged d. Clutch disc worn e. Clutch feed pipe/O-ring worn/damaged
13	2nd gears worn/damaged
14	2nd clutch faulty a. Clutch piston stuck b. Foreign material stuck in clutch check valve c. Clutch O-ring worn/damaged d. Clutch disc worn e. Clutch seal ring seized/damaged
15	Reverse gears worn/damaged
16	Torque converter one-way clutch seized
17	Engine throttle cable misadjusted
18	Transmission throttle control cable misadjusted
19	Throttle valve B faulty
20	1—2 shift valve faulty
21	2—3 shift valve faulty
22	3—4 shift valve faulty
23	2nd accumulator faulty
24	3rd accumulator faulty
25	4th accumulator faulty
26	2rd orifice control valve faulty
27	Foreign material in main orifice
28	Foreign material in 1st orifice
29	Foreign material in 2nd orifice
30	3rd orifice control valve faulty

PROBLEM	REFER TO
—Abnormal noise in all gears, neutral and park	3,6,43
—Engine accelerates up to 50 km/h, but not more	16
—Vibration in all gears	39
—Harsh to shift	8,45
—Car has only 4th gear.	57
—Transmission has no park.	8,45
—Stall rpm is high, but clutch pressure OK in all positions.	47
Harsh lock-up clutch disengagement —Engine stalls easily. —No power sound in low/middle speed —Noise/vibration in low/middle speed —Excessive shock while shifting	18,19,49,50 51,52,55,56 57
Lock-up clutch hunts ON—OFF. —Tachometer needle swings large while driving. —Car shakes back and forth while driving.	18,19,51,55 56,57
Lock-up clutch does not engage.	18,19,47,50 51,55,57

	PROBABLE CAUSE
31	Foreign material in 3rd orifice
32	Foreign material in 4th orifice
33	3rd clutch faulty a. Clutch piston stuck b. Foreign material stuck in clutch check valve c. Clutch O-ring worn/damaged d. Clutch disc worn e. Clutch feed pipe/O-ring worn/damaged
34	4th clutch faulty a. Clutch piston stuck b. Foreign material stuck in clutch check valve c. Clutch O-ring worn/damaged d. Clutch disc worn e. Clutch feed pipe/O-ring worn/damaged
35	Engine power low
36	Needle bearing seized
37	Washers/collars seized
38	Clutch clearance incorrect
39	Drive plate faulty or transmission assembly improperly installed
40	2nd check ball stuck
41	3rd check ball stuck
42	4th check ball stuck
43	Mainshaft/countershaft ball bearing damaged
44	Oil filter clogged
45	Body/case wire cable joint damaged
46	Modulator valve fautly
47	Torque converter check valve faulty
48	Foreign material in separator orifice
49	Lock-up timing valve B faulty
50	Lock-up shift valve faulty
51	Lock-up piston in torque converter faulty
52	Lock-up control valve faulty
53	Shift control solenoid valve A faulty
54	Shift control solenoid valve B faulty
55	Lock-up control solenoid valve A faulty
56	Lock-up control solenoid valve B faulty
57	Control unit system faulty
58	Servo control valve faulty

Secondary Valve Body

Disassembly/Inspection/Reassembly

NOTE:
- Clean all parts thoroughly in solvent or carburetor cleaner, and dry with compressed air. Blow out all passages.
- Check all valves for free movement. If any fail to slide freely, see Valve Body Repair.
- Replace as assembly if any parts are worn or damaged.

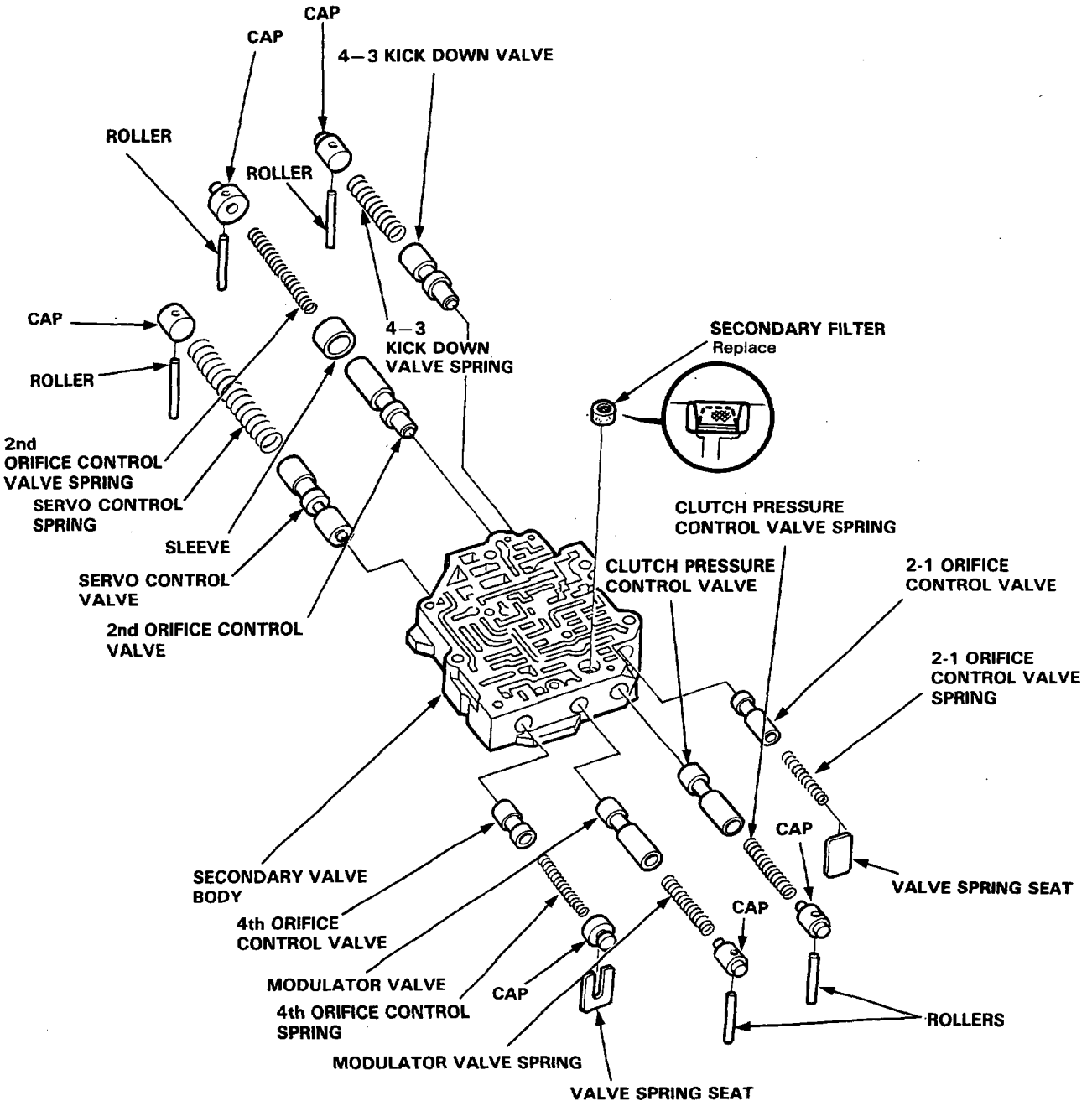

Servo Valve Body

Disassembly/Inspection/Reassembly

NOTE:
- Clean all parts thoroughly in solvent or carburetor cleaner, and dry with compressed air. Blow out all passages.
- Check all valves for free movement. If any fail to slide freely, see Valve Body Repair.
- Replace valve body as assembly if any parts are worn or damaged.

Accumulator Spring O.D.

2nd Accumulator Spring:	20.0 mm (0.79 in)
3rd Accumulator Spring:	17.9 mm (0.70 in)
4th Accumulator Spring:	15.6 mm (0.61 in)

Accumulator Spring Free Length

2nd Accumulator Spring	
Standard:	79.7 mm (3.14 in)
Service Limit:	78.5 mm (3.09 in)
3rd Accumulator Spring	
Standard:	82.8 mm (3.26 in)
Service Limit:	81.6 mm (3.21 in)
4th Accumulator Spring	
Standard:	86.4 mm (3.40 in)
Service limit:	85.1 mm (3.35 in)

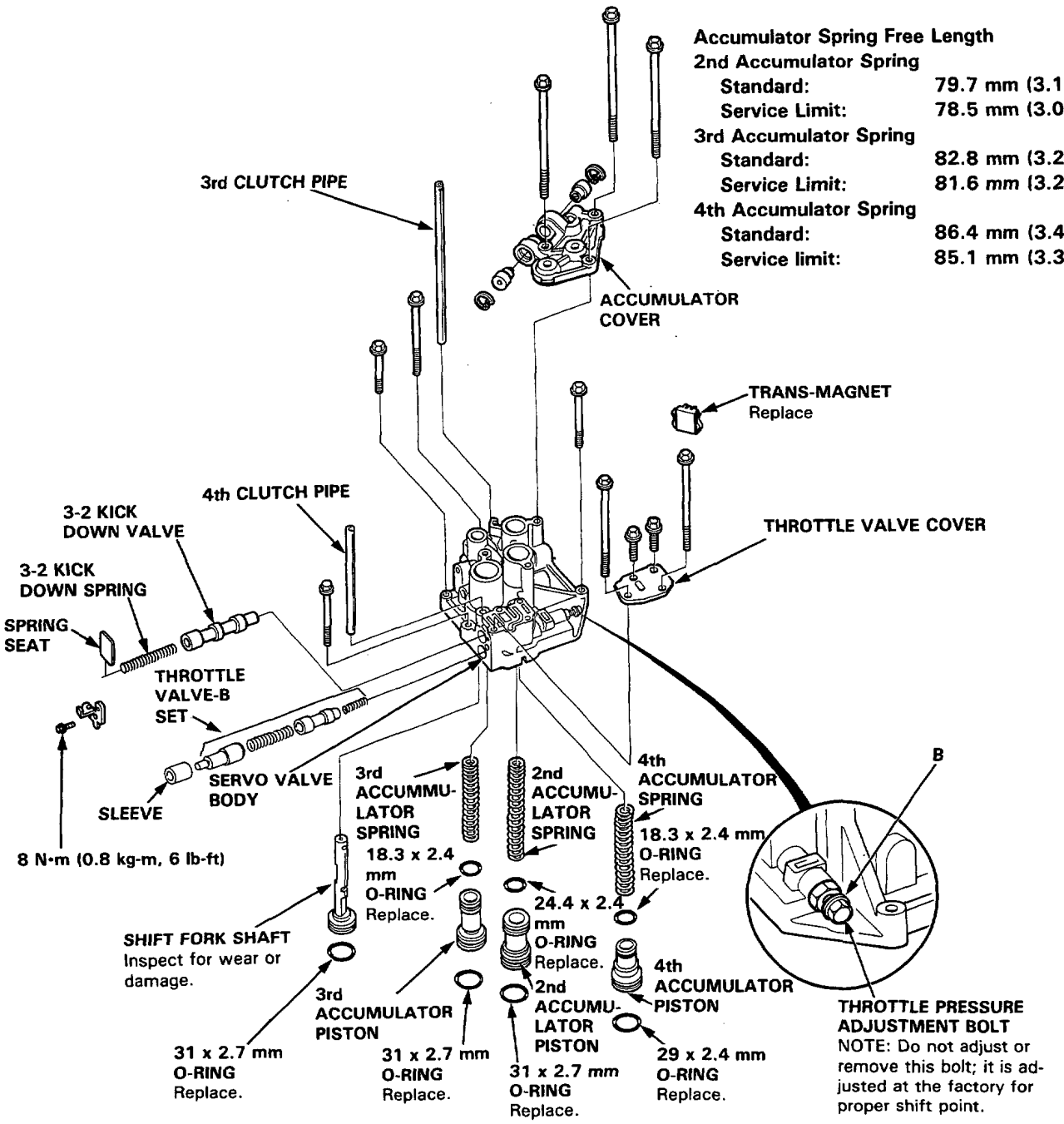

Main Valve Body

Disassembly

NOTE:
- Clean all parts thoroughly in solvent or carburetor cleaner, and dry with compressed air. Blow out all passages.
- Replace valve body as an assembly if any parts are worn or damaged.
- Coat all parts with ATF before reassembly.

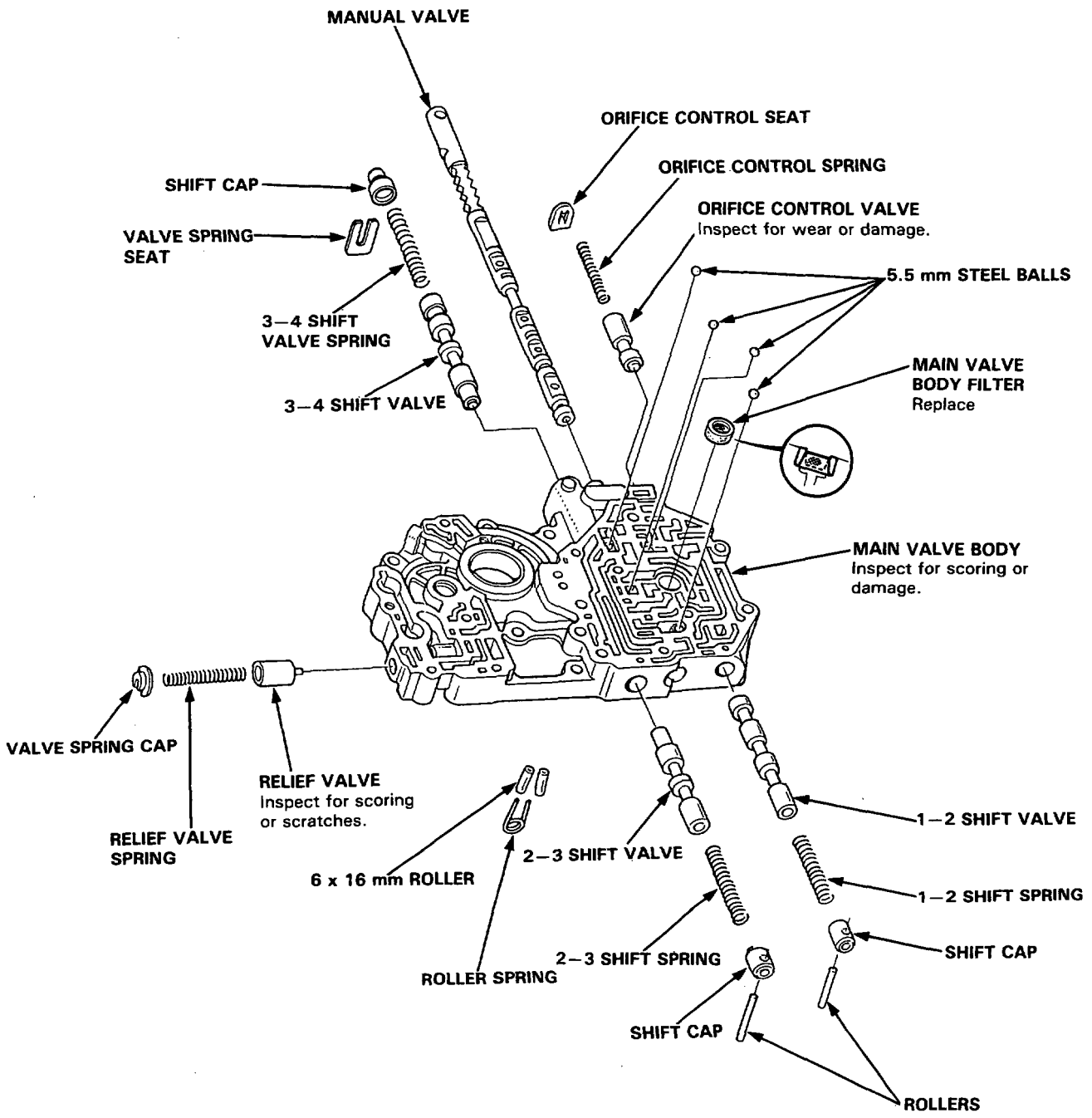

Parking Brake Stopper

Inspection/Adjustment

1. Set the parking shift arm in PARKING position.
2. Measure the distance between the outer face of the parking pawl shaft and outer face of the parking shift arm roller pin.

Distance: 30.5–31.5 mm (1.201–1.240 in.)

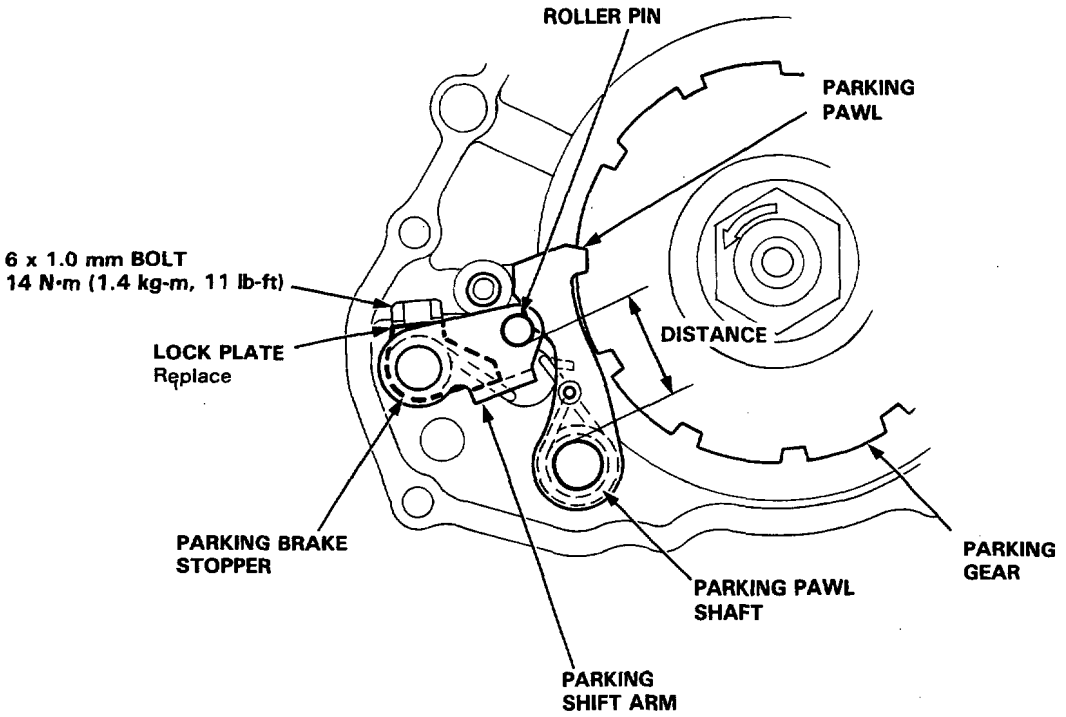

3. If the distance is out of the specification, select the sppropriate parking brake stopper using the table below, and install it on the parking shift arm.

No.	PART NUMBER
1	24537–PA9–003
2	24538–PA9–003
3	24539–PA9–003

Throttle Control Cable

Adjustment/Inspection

NOTE: Before adjusting the throttle control cable, make sure:

- The throttle cable free play is correct.
- The engine is at normal operating temperature (cooling fan comes on).
- The idle speed is correct.

Inspection:
NOTE: You can work the throttle linkage body with your hand.

1. Remove the throttle cable free play.
2. Apply light thumb pressure to the throttle control lever, then work the accelerator or throttle linkage. The lever should move just as the engine speed increases above idle. If not, proceed to Adjustment.

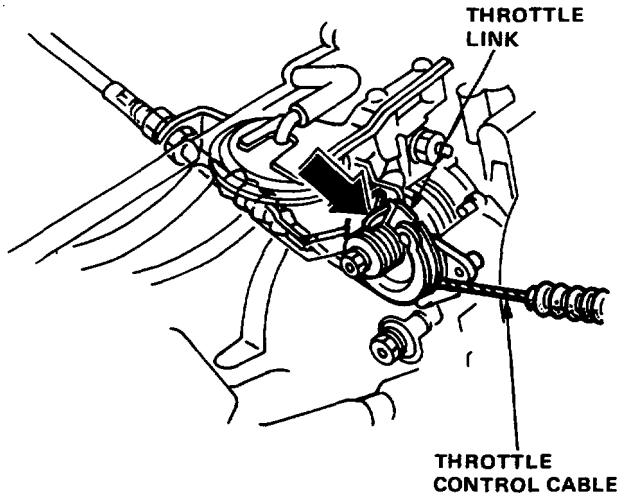

Adjustment:
1. Loosen the nuts on the control cable at the transmission end and synchronize the control lever to the throttle.

NOTE: To tailor the shift/lock-up characteristics to a particular customers driving expectations, you can adjust the control cable up to 3 mm shorter than the "synchronized" point.

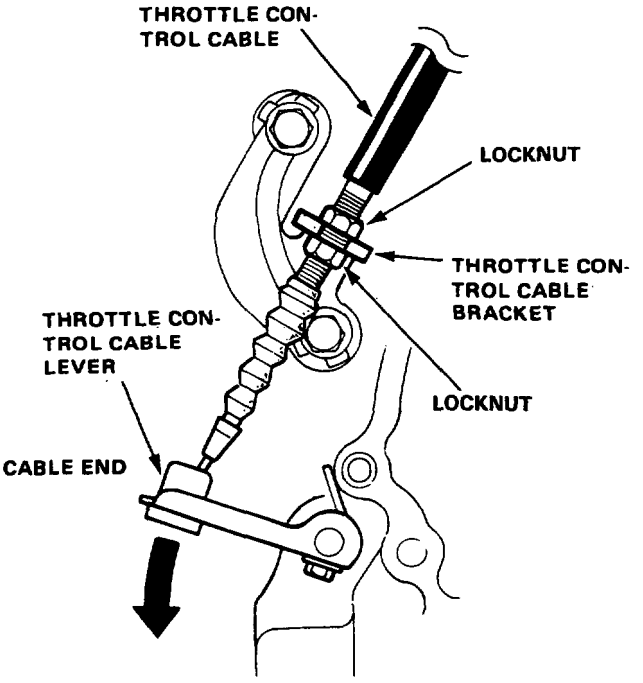

Special Tool

Ref. No.	Tool Number	Description	Q'ty	Remarks
①	07KAA–SD40100	40 mm Lock Nut Wrench	1	

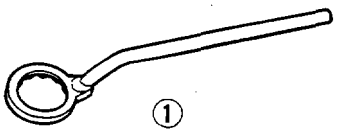

Valve Body Unit Disassembly

1. Drain the power steering fluid.
2. Remove the gearbox shield.
3. Using solvent and a brush, wash any oil and dirt off the control unit, its lines, and that end of the gearbox. Blow dry with compressed air.
4. Disconnect the return hose by removing the tube clip.
5. Using flare nut wrenches, disconnect the three lines from the control unit.

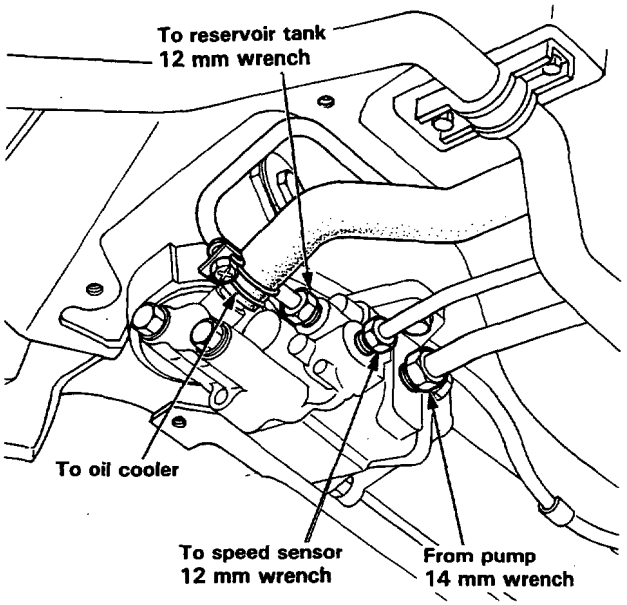

6. Remove the two 6 mm flange bolts and remove the valve body unit from the gear box.

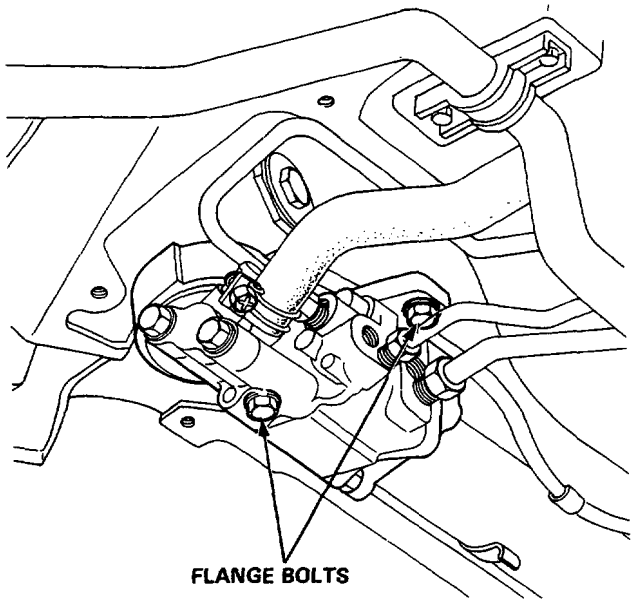

7. Remove the O-rings and port orifices from the gear box.
8. Remove the O-ring from the valve body unit.

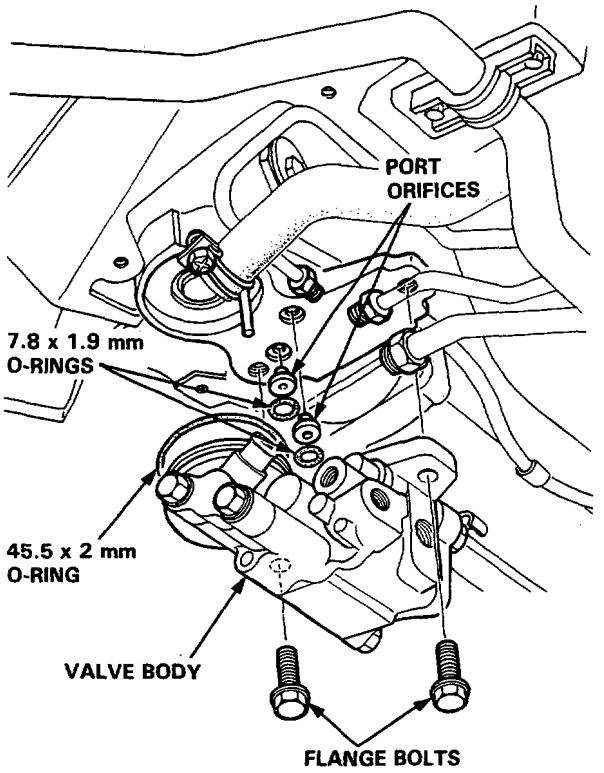

9. Remove the two 6 mm flange bolts, and remove the cap from the valve body.
10. Remove the port seal from the cap.

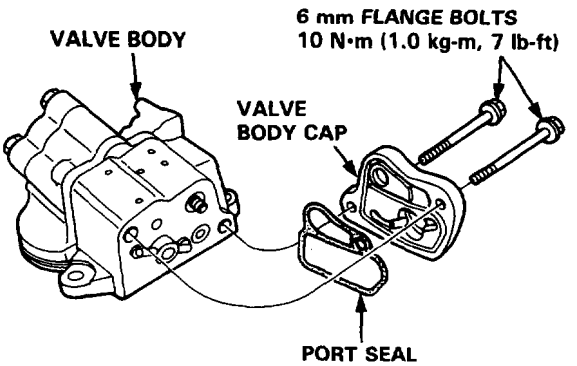

(cont'd)

Valve Body Unit Disassembly (cont'd)

11. Remove the cut-off valve and spring from the valve body.

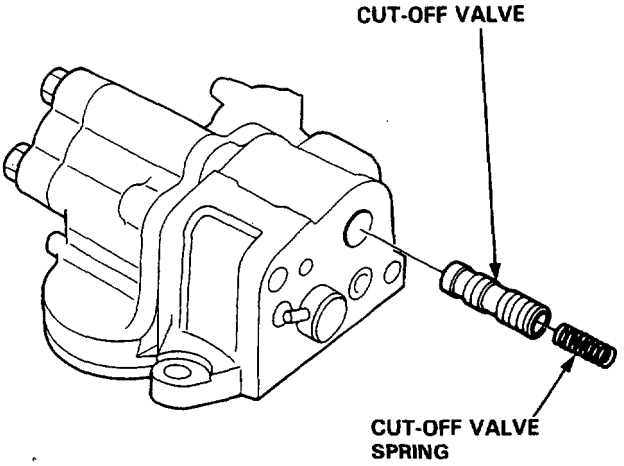

12. Check the cut-off valve:

- Inspect its surface for scoring or scratches.
- Slip it back into the valve body, and make sure it slides smoothly without drag and without side play.

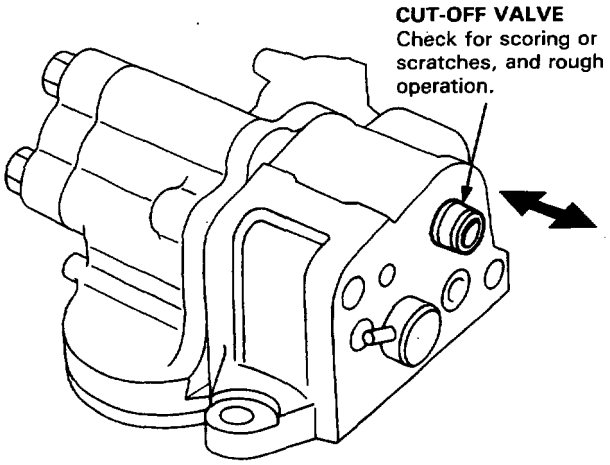

NOTE:
- The cut-off valve is sized to fit the valve body, so, if you replace it, make sure the new valve has the same identification mark on it.
- If the valve body is damaged, replace all three parts (valve body, cut-off valve and control valve) as a set.

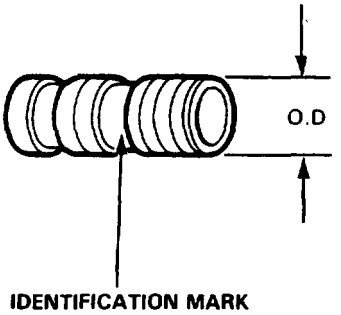

Identification mark	Outside diameter	Part number
A	10.000–10.005 mm (0.3937–0.3939 in.)	53650–SEO–950
B	9.995–10.000 mm (0.3935–0.3937 in.)	53651–SEO–950
C	9.990–9.995 mm (0.3933–0.3935 in.)	53652–SEO–950

13. Separate the valve body and port housing.

14. Remove the port seal and dowel pins from the port housing.

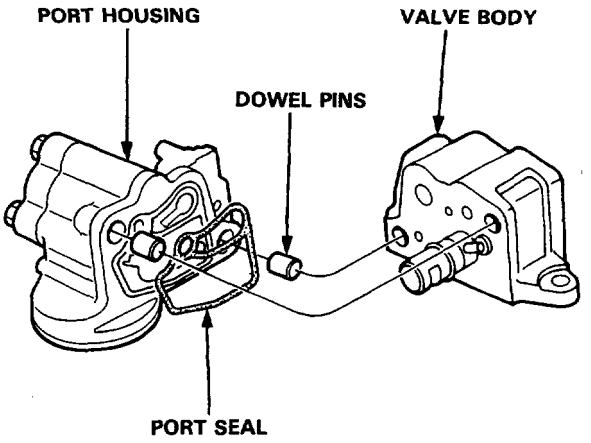

15. Remove the rollers from the control valve by pushing the valve out one side of the valve body, and then the other.

NOTE: When removing the rollers, hold the plungers with your fingers to keep them from popping out.

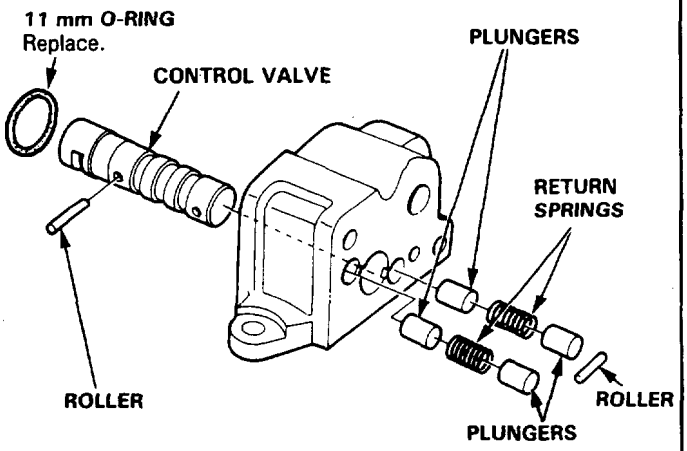

16. Remove the plungers, return springs and control valve from the valve body.

17. Remove the 11 mm O-ring from the control valve.

18. Check the plungers.

- Inspect their surface for scoring or scratches.
- Slip each plunger into the valve body, and make sure it slides smoothly, without drag or side play.
  If any plunger is damaged, replace it.

NOTE: If the valve body is damaged , replace all three parts (valve body, cut-off valve and control valve) as a set.

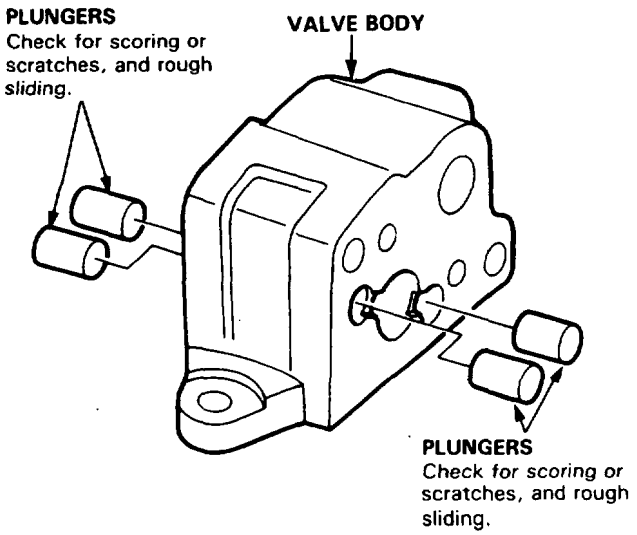

19. Check the control valve.

- Inspect its surface for scoring or scratches.
- Slip it into the valve body, and make sure it slides smoothly, without drag or side play.

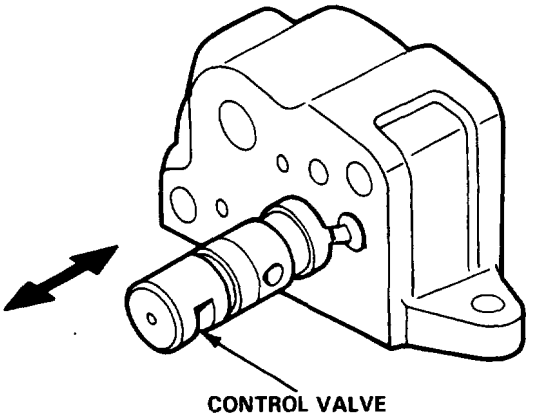

NOTE:
- The control valve is sized to fit the valve body, so, if you replace it, make sure the new valve has the same identification mark on it.
- If the valve body is damaged, replace all three parts (valve body, control valve and cut-off valve) as a set.

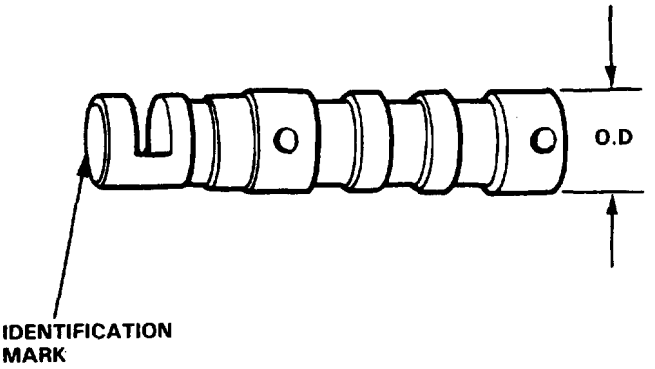

Identification mark	Outside Diameter	Part Number
X	13.998 – 14.003 mm (0.5511 – 0.5513 in.)	53646–SD4–J60
Y	13.993 – 13.998 mm (0.5509 – 0.5511 in.)	53647–SD4–J60
Z	13.988 – 13.993 mm (0.5507 – 0.5509 in.)	53648–SD4–J60

(cont'd)

Valve Body Unit Disassembly (cont'd)

20. Using a 1.5 mm (1/16") drill bit, remove the sensor orifice and O-ring.

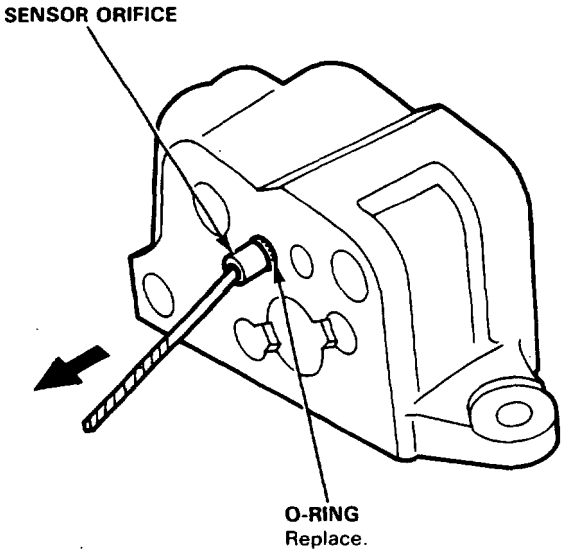

21. Using a 1.5 mm (1/16") drill bit, push the damping orifice and O-ring out of the valve body.

CAUTION: Grind the shank end of the drill bit flat before using.

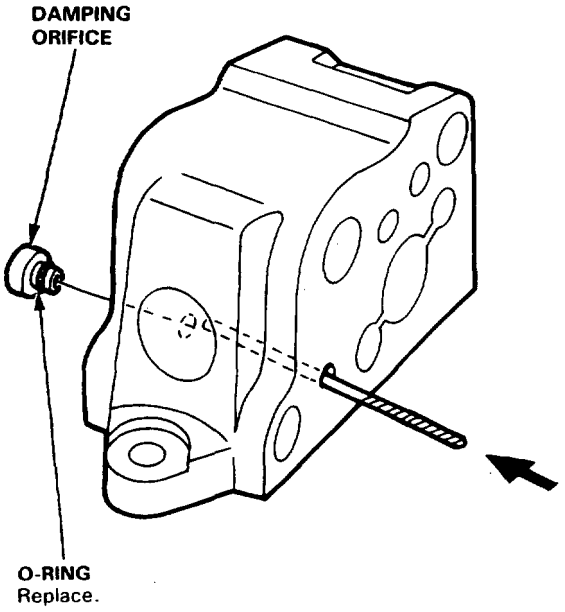

Valve Body Unit Assembly

1. Thoroughly clean the disassembled parts shown below.
2. Coat the plungers, cut-off valve and reaction control valve surfaces with power steering fluid.
3. Reassemble the parts in reverse order of disassembly.

CAUTION:

- **Replace the O-rings and seals with new ones.**
- **Do not dip the O-rings and seals in solvent.**
- **Apply grease in the port seal grooves to keep the seals in place.**
- **Apply grease to the 45.5 x 2 mm and 11 mm O-rings to keep them in place in the valve ports.**
- **GREASE STEERING GREASE.....Part Number 08733–B070E**

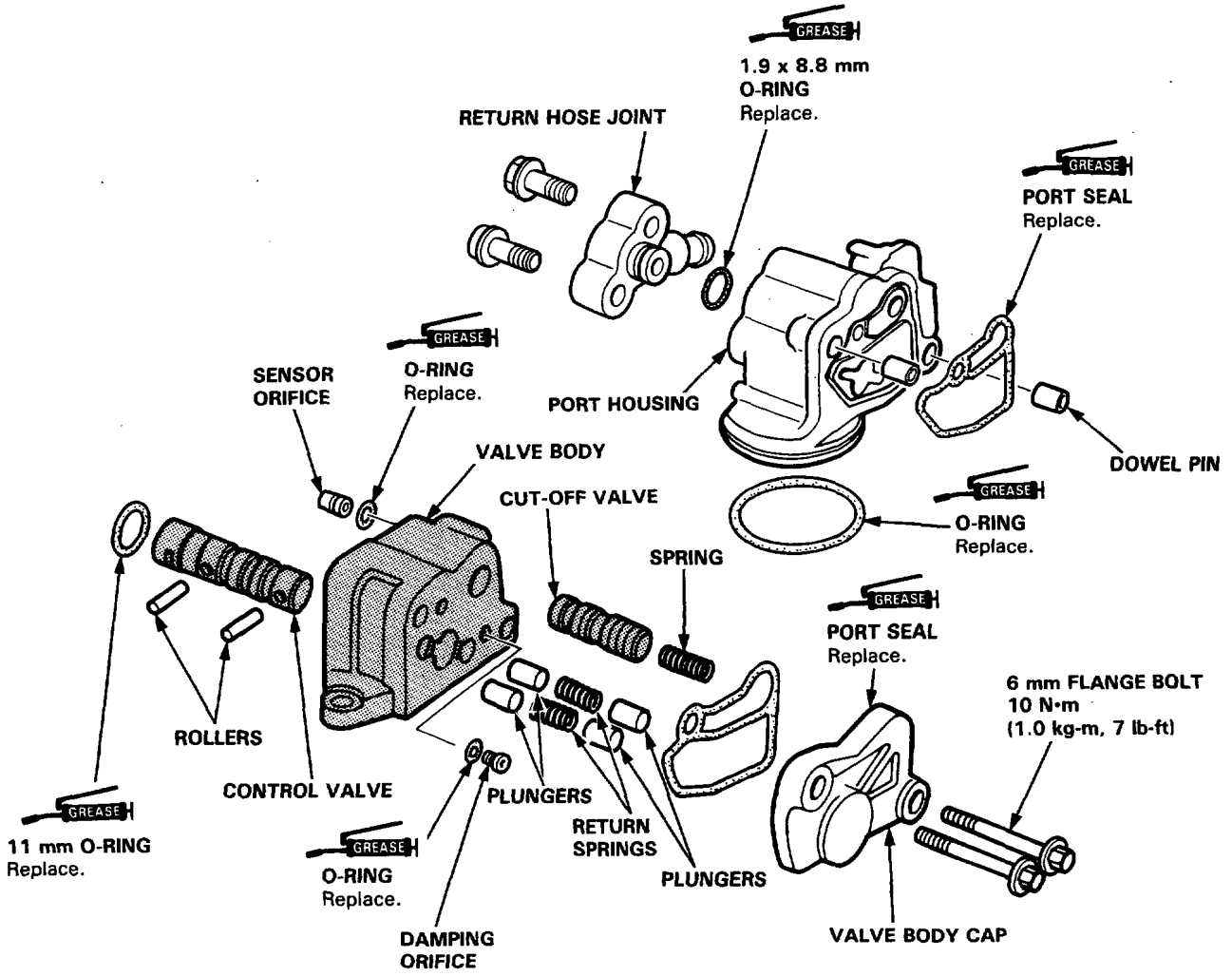

NOTE: If the Valve Body is damaged, it must be replaced as a set, with the Cut-off Valve and Control Valve (shaded parts).

(cont'd)

Valve Body Unit Assembly (cont'd)

4. Install and tighten the 6 mm flange bolts in the control valve body unit.

   CAUTION: Make sure the mating surface of the valve body and cap are flush at the upper side.

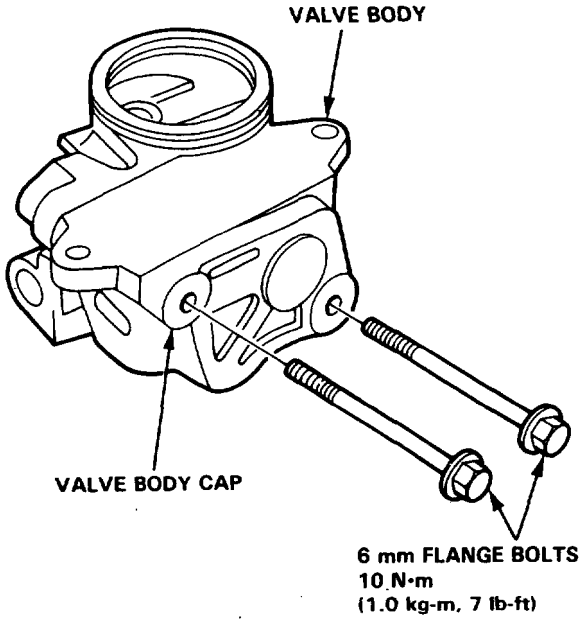

5. Make sure the control valve moves smoothly, and returns to neutral position.

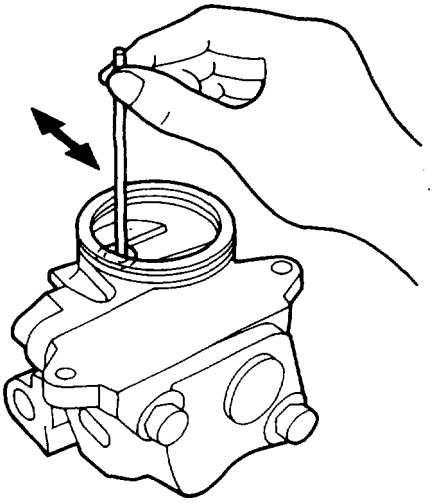

6. Coat the 7.8 x 1.9 mm O-rings with grease, and install them together with orifices.

7. Install the valve body unit on the gear housing with the two 6 mm bolts.

   CAUTION:
   - **When installing, be careful not to hit the pinion holder pin.**
   - **Make sure the O-rings are in place and not pinched.**

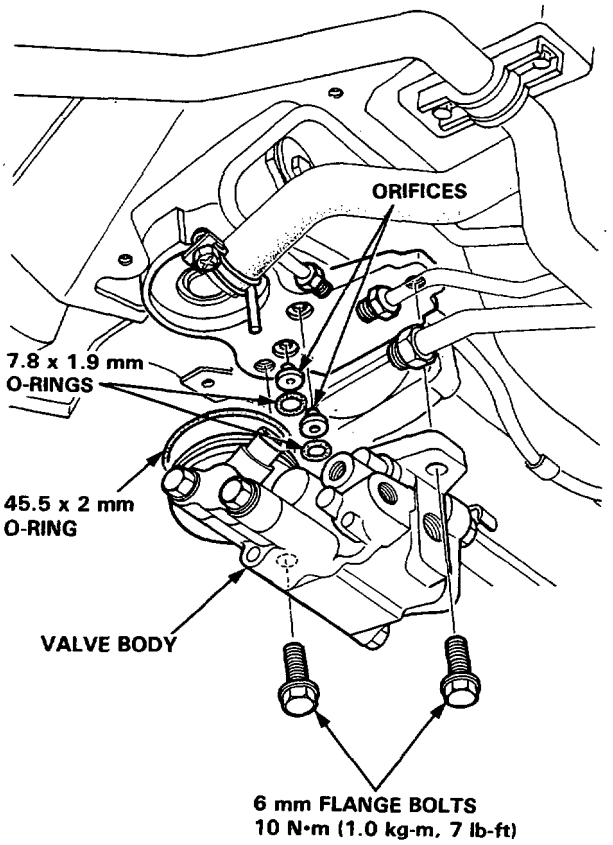

8. Connect the three lines to the control unit, using flare nut wrenches.

   A: From pump: 14 mm wrench
   38 N·m (3.8 kg-m, 28 lb-ft)
   B: To speed sensor: 12 mm wrench
   13 N·m (1.3 kg-m, 9 lb-ft)
   C: To reservoir: 12 mm wrench
   13 N·m (1.3 kg-m, 9 lb-ft)

9. Connect the return hose to the control unit with the tube clip.

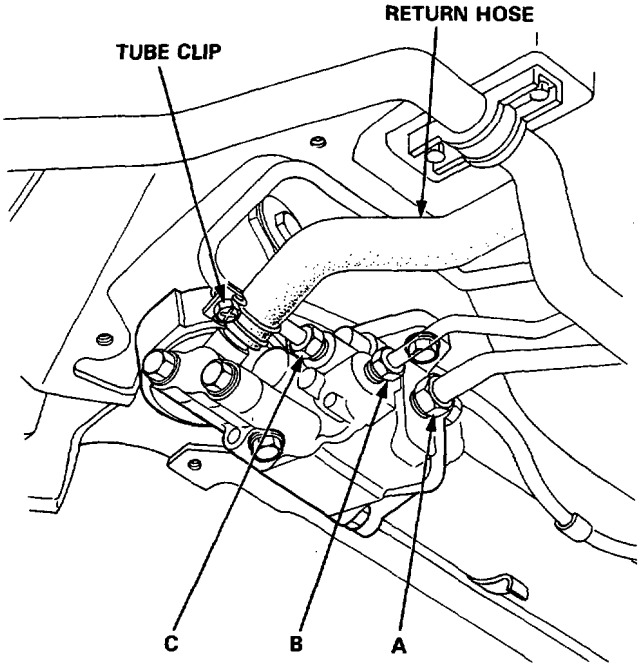

Rack Guide Adjustment

1. Remove the return hose bracket.

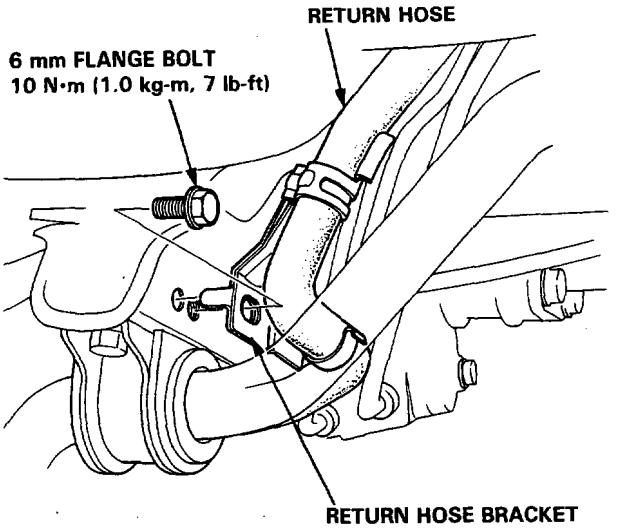

2. Loosen the lock nut on the rack guide screw with the special wrench as shown.

   NOTE: Be careful not to bend the return hose excessively while performing the adjustment; it damages the return hose.

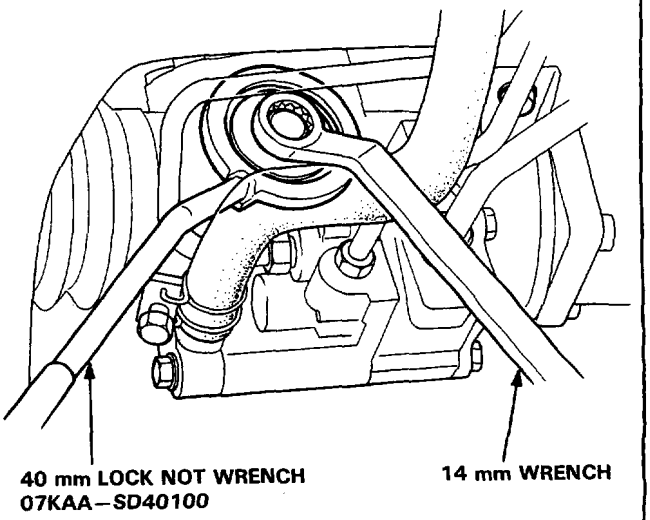

3. Tighten the guide screw until it compresses the spring and seats against the guide, then loosen it. Retighten it to about 4 N·m (0.4 kg-m, 3 lb-ft) and back it off about $20°^{+5}_{0}$.

4. Check the steering effort.

8. Connect the three lines to the control unit, using flare nut wrenches.

   A: From pump: 14 mm wrench
   38 N·m (3.8 kg-m, 28 lb-ft)
   B: To speed sensor: 12 mm wrench
   13 N·m (1.3 kg-m, 9 lb-ft)
   C: To reservoir: 12 mm wrench
   13 N·m (1.3 kg-m, 9 lb-ft)

9. Connect the return hose to the control unit with the tube clip.

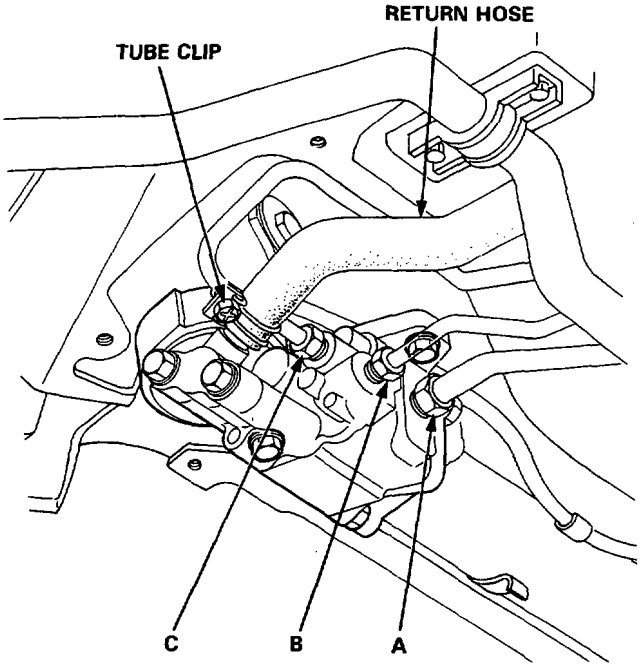

Rack Guide Adjustment

1. Remove the return hose bracket.

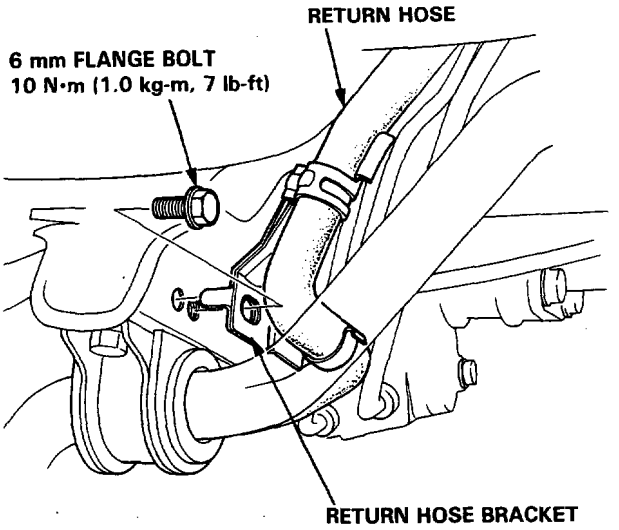

2. Loosen the lock nut on the rack guide screw with the special wrench as shown.

   NOTE: Be careful not to bend the return hose excessively while performing the adjustment; it damages the return hose.

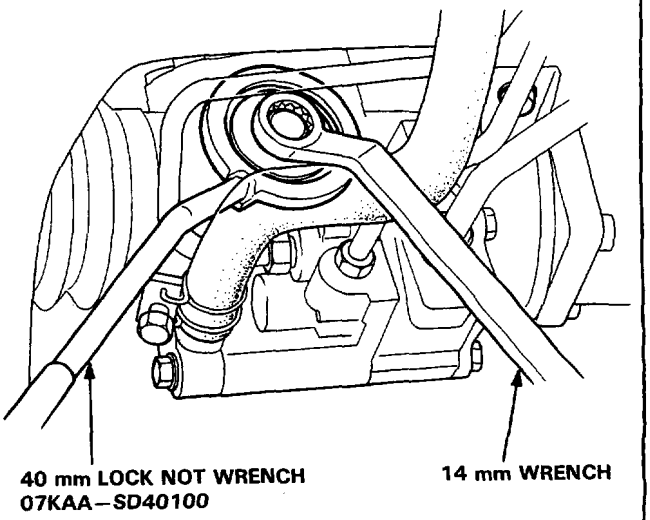

3. Tighten the guide screw until it compresses the spring and seats against the guide, then loosen it. Retighten it to about 4 N·m (0.4 kg-m, 3 lb-ft) and back it off about $20°^{+5}_{0}$.

4. Check the steering effort.

Special Tools

No.	Tool Number	Description	Q'ty	Remarks
①	07965–5790300	Cup Guide	1	

①

Master Cylinder

Overhaul/Inspection

CAUTION:

- **Do not spill brake fluid on the car; it may damage the paint; if brake fluid does contact the paint, wash it off immediately with water.**
- **To prevent spills, cover the hose joints with rags or shop towels.**
- **Clean all parts in brake fluid and air dry; blow out all passages with compressed air.**
- **Before reassembling, check that all parts are free of dust and other foreign particles.**
- **Replace parts with new ones whenever specified to do so.**
- **Make sure no dirt or other foreign matter is allowed to contaminate the brake fluid.**
- **Do not mix different brands of brake fluid as they may not be compatible.**
- **Do not reuse the drained fluid.**

NOTE:

- Replace all rubber parts with new ones whenever the cylinder is disassembled.
- To prevent damage, liberally apply clean brake fluid to the piston cups before installation. Use special tool to install the cups.

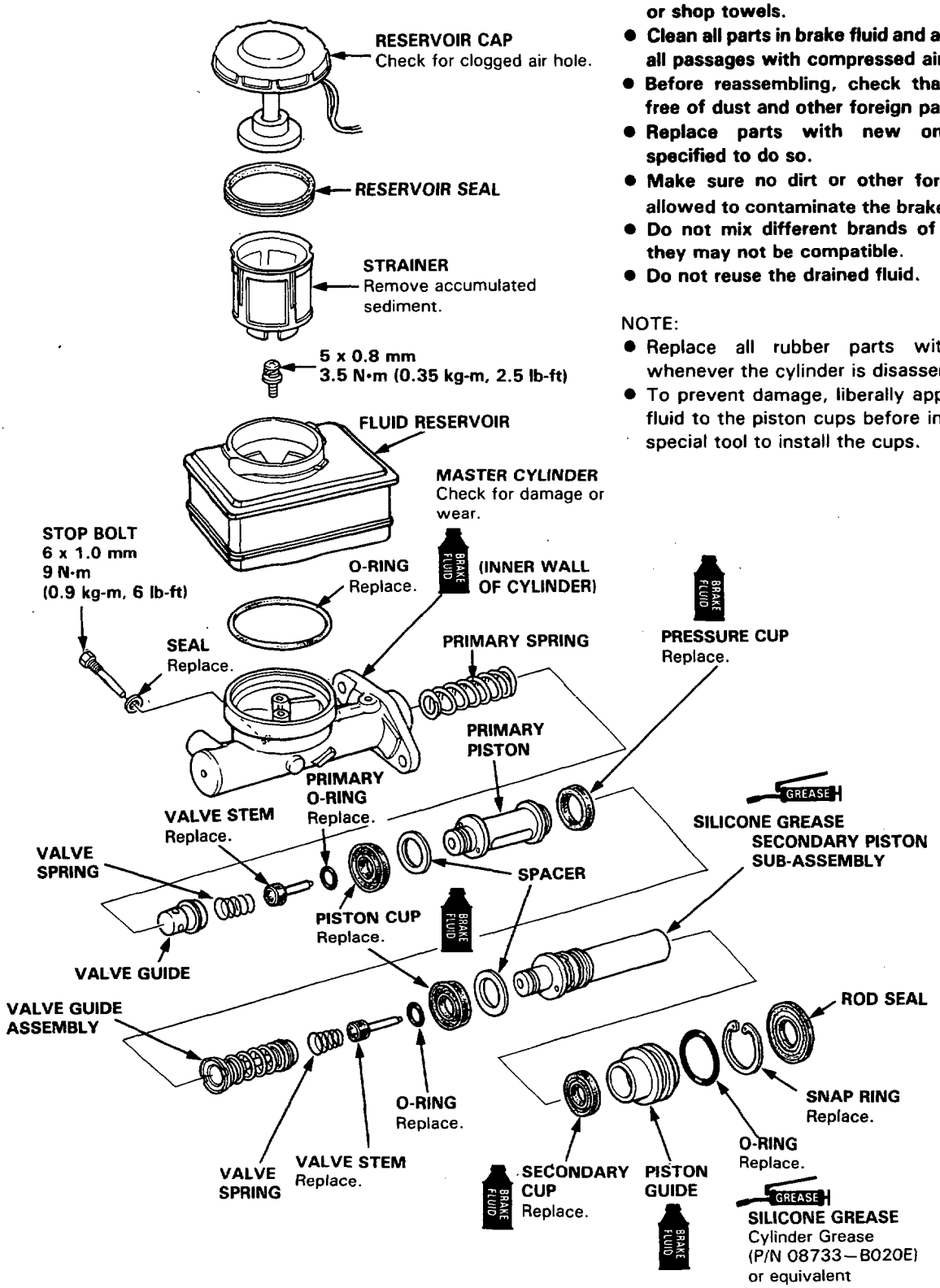

Master Cylinder

Disassembly

CAUTION:
- **Do not spill brake fluid on the car, it may damage the painted, plastic or rubber parts.**
- **To prevent spills, cover the hose joints with rags or shop towels.**
- **Use only new clean brake fluid.**
- **Clean all parts in brake fluid and air dry; blow out all passages with compressed air.**
- **Make sure no dirt or other foreign matter is allowed to contaminate the brake fluid.**
- **Be careful not to bend or damage the brake pipe when removing the master cylinder.**

1. Remove the rod seal.

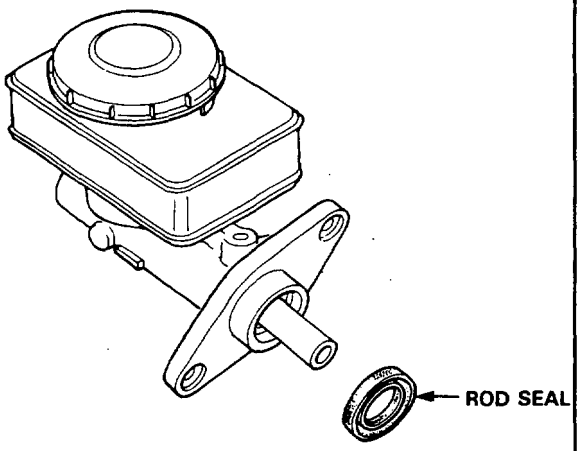

2. Push the secondary piston assembly in, then remove the snap ring.

   CAUTION: Avoid damaging the master cylinder wall.

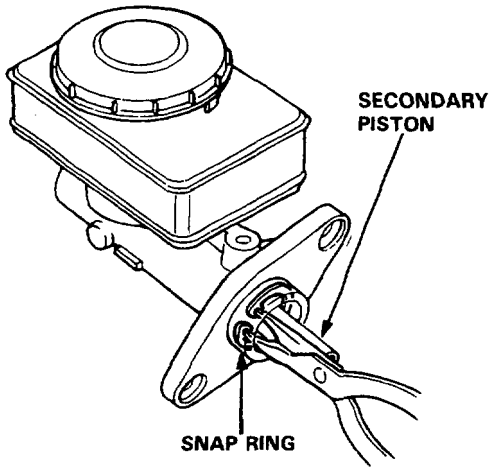

3. Remove the stop bolt while pushing in the secondary piston assembly.

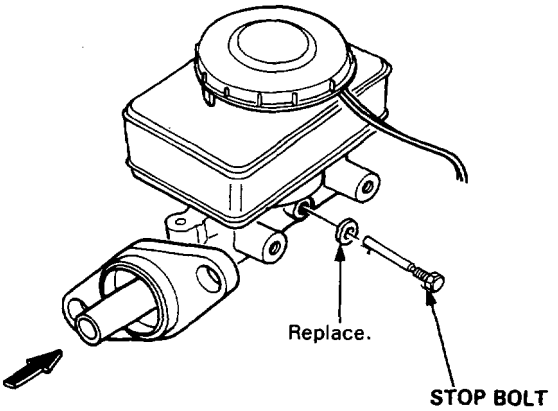

4. Remove the piston guide, secondary piston assembly and primary piston assembly.

   NOTE: If the primary piston assembly is difficult to remove, apply compressed air from the primary piston side outlet.

   CAUTION:
   - **Do not use high pressure air or bring the nozzle too close to the inlet.**
   - **Place a shop rag over the master cylinder to prevent the primary piston from becoming a projectile.**

Reassembly

CAUTION:

- **Do not spill brake fluid on the car; it may damage the paint; if brake fluid does contact the paint, wash it off immediately with water.**
- **To prevent spills, cover the hose joints with rags or shop towels.**
- **Clean all parts in brake fluid and air dry; blow out all passages with compressed air.**
- **Use only new clean brake fluid.**
- **Before reassembling, check that all parts are free of dust and other foreign particles.**
- **Replace parts with new ones whenever specified to do so.**
- **Make sure no dirt or other foreign matter is allowed to contaminate the brake fluid.**
- **Do not mix different brands of brake fluid as they may not be compatible.**
- **Do not reuse the drained fluid.**

1. Coat the Cup Guide (special tool) with brake fluid, install the cup over the Cup Guide, then slide the cup onto the primary piston.

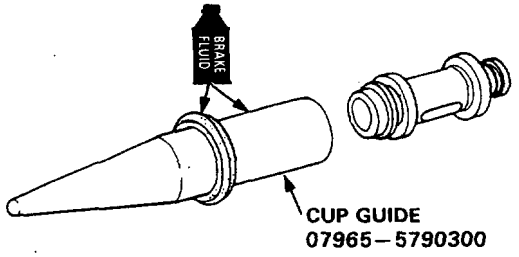

2. Install the spacer, piston cup, O-ring, valve stem and valve spring onto the primary piston.

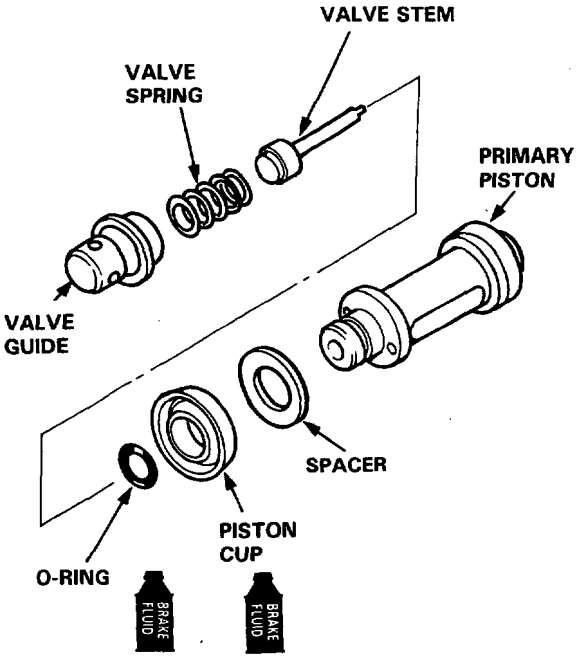

3. Install the valve guide and primary spring to the primary piston.

PRIMARY PISTON ASSEMBLY

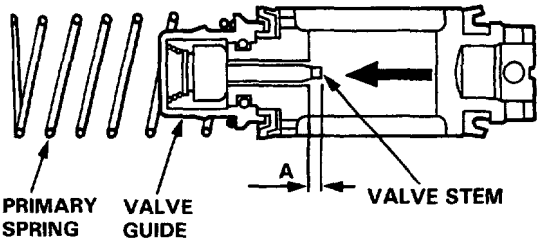

NOTE:

- Reaching through the primary piston stop bolt hole, lightly press on the valve stem to see if it moves smoothly.
- Make sure that the dimension A is 1.85–2.45 mm.

4. Install the spacer, piston cup, O-ring, valve stem and valve spring onto the secondary piston sub-assembly.

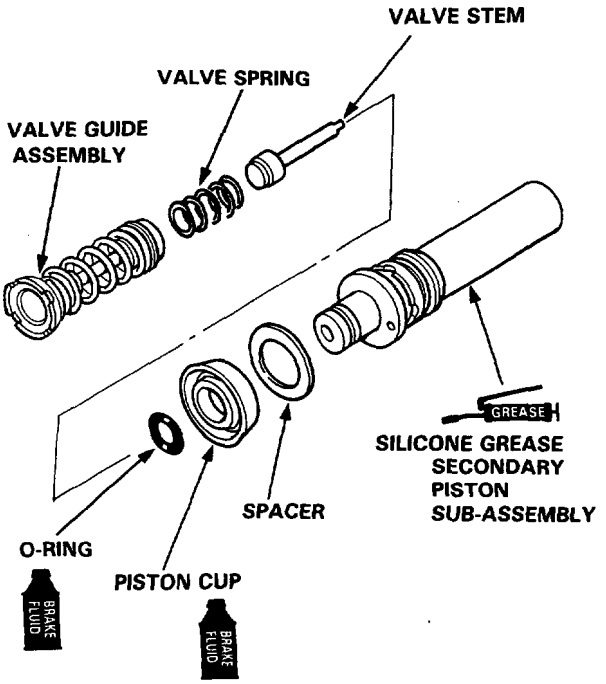

(cont'd)

Reassembly (cont'd)

5. Install the valve guide assembly to the secondary piston sub-assembly.

SECONDARY PISTON ASSEMBLY

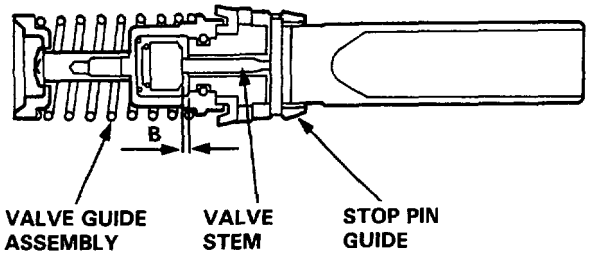

NOTE:
- Install the valve guide assembly after confirming that the dimension B is 0.9—1.5 mm.
- Lightly press the stop pin guide to see if the valve stem moves smoothly.

6. Assemble the primary piston assembly, secondary piston assembly and piston guide assembly in the master cylinder body.

NOTE: Install the primary piston with the slot on the cylinder facing the stop bolt hole side.

7. Push the secondary piston in until slot aligns with the stop bolt hole, then install and tighten the stop bolt.

CAUTION:
- **Replace the stop bolt seal with a new one whenever disassembled.**
- **Apply brake fluid to the inner wall of the cylinder and piston cups, being careful that they are not turned inside out during installation.**

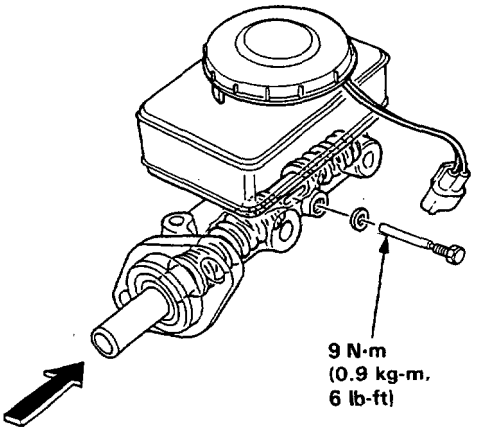

8. Press the secondary piston in and install the snap ring.

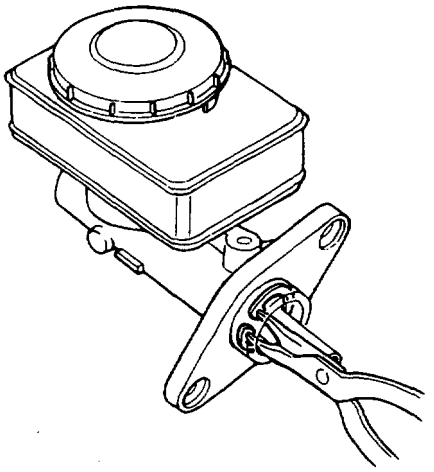

CAUTION: Avoid damaging the sliding surface of the secondary piston when installing the snap ring.

9. Install the rod seal.

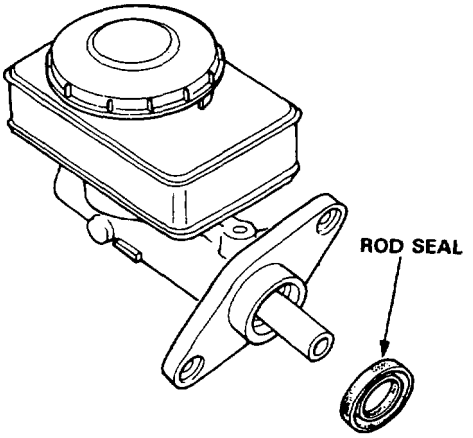

CAUTION: Make sure that there is no interference between the brake pipes and other parts when installing.

Gauge Assembly (KY model)

Circuit Diagram

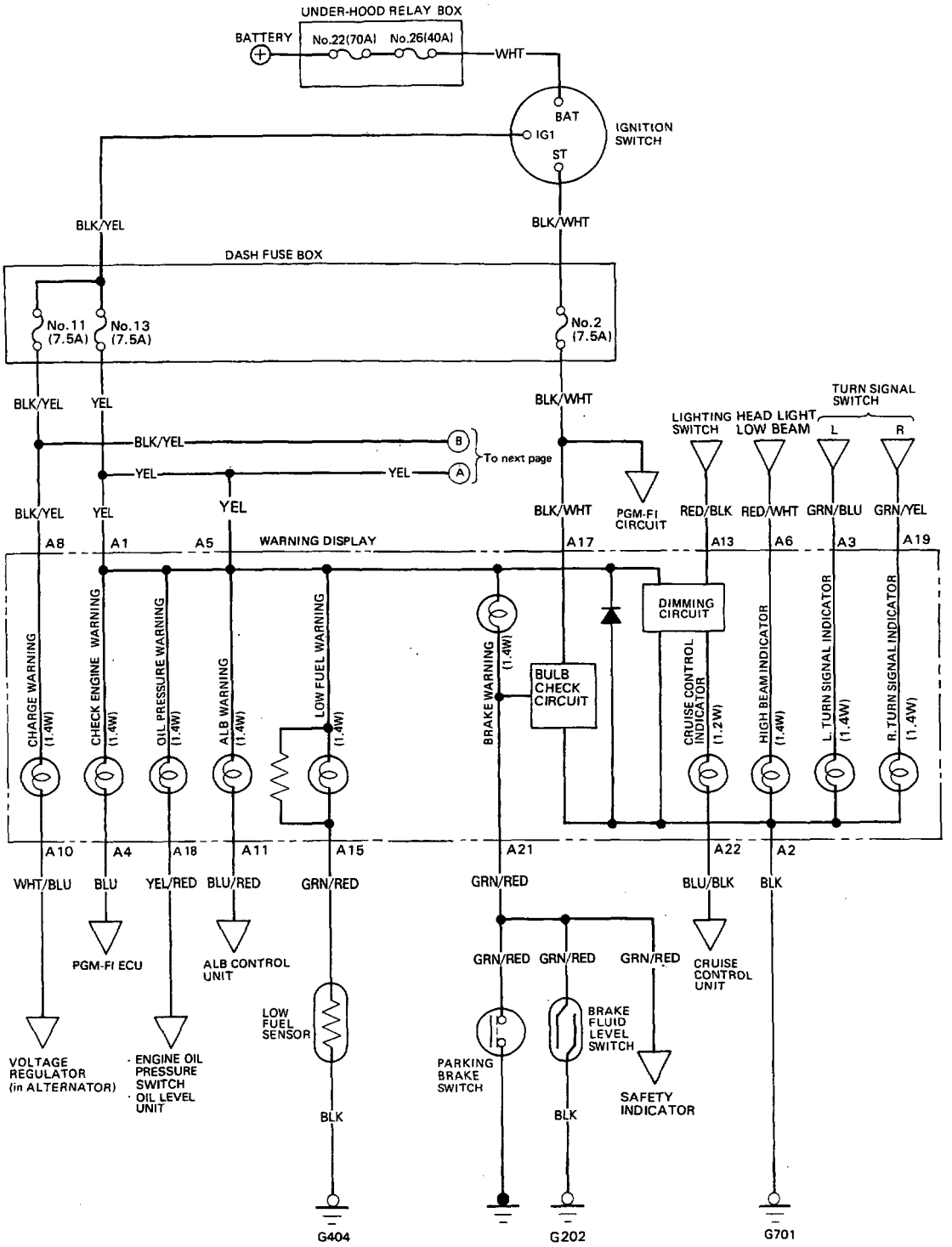

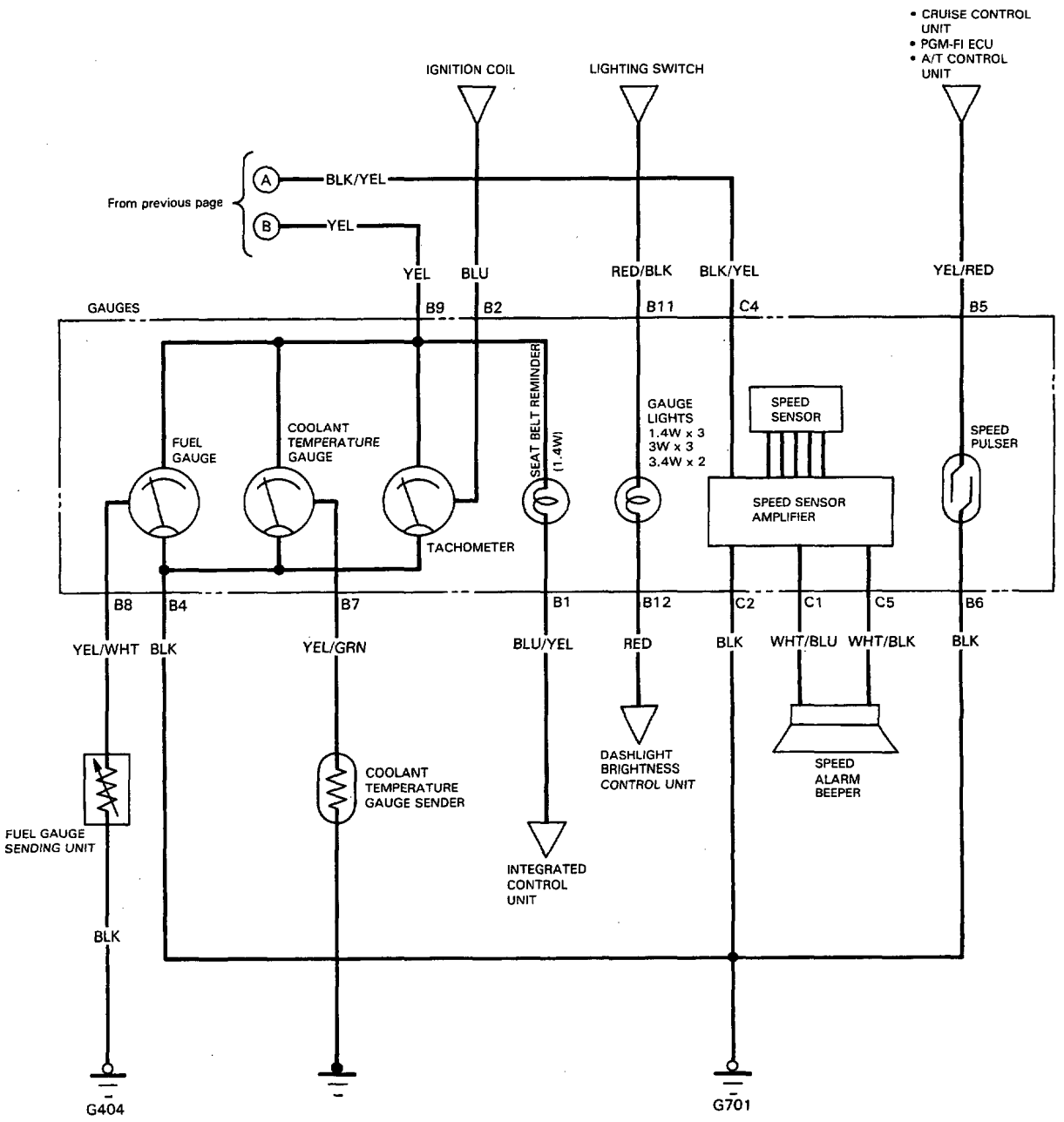
• CRUISE CONTROL UNIT
• PGM-FI ECU
• A/T CONTROL UNIT
IGNITION COIL
LIGHTING SWITCH
From previous page
A
BLK/YEL
B
YEL
YEL
BLU
RED/BLK
BLK/YEL
YEL/RED
GAUGES
B9
B2
B11
C4
B5
SEAT BELT REMINDER
(1.4W)
GAUGE LIGHTS
1.4W x 3
3W x 3
3.4W x 2
SPEED SENSOR
SPEED PULSER
FUEL GAUGE
COOLANT TEMPERATURE GAUGE
TACHOMETER
SPEED SENSOR AMPLIFIER
B8
B4
B7
B1
B12
C2
C1
C5
B6
YEL/WHT
BLK
YEL/GRN
BLU/YEL
RED
BLK
WHT/BLU
WHT/BLK
BLK
DASHLIGHT BRIGHTNESS CONTROL UNIT
SPEED ALARM BEEPER
COOLANT TEMPERATURE GAUGE SENDER
FUEL GAUGE SENDING UNIT
INTEGRATED CONTROL UNIT
BLK
G404
G701

Gauge Assembly (KY model)

Gauge/Indicator Location Index

GAUGE ASSEMBLY
Disassembly, page 16-7

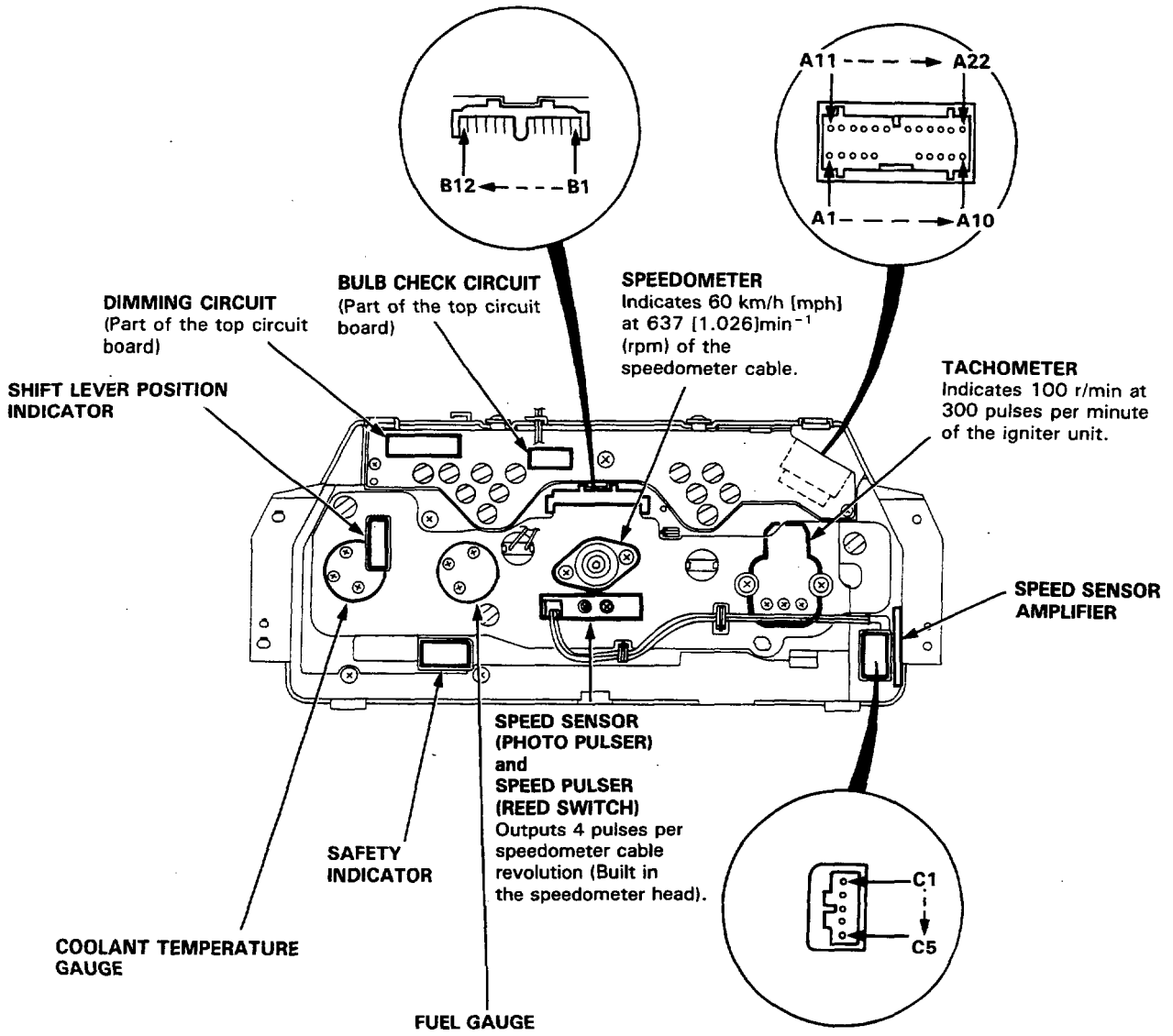

Removal

1. Remove the 4 screws, then remove the instrument panel from the dashboard.

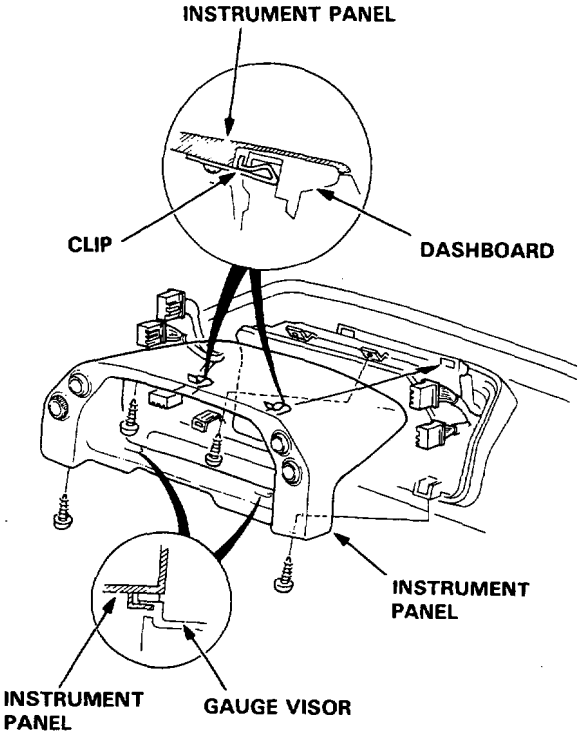

2. Remove the 4 screws, then pull the gauge assembly out half-way and disconnect the speedometer cable and connectors.

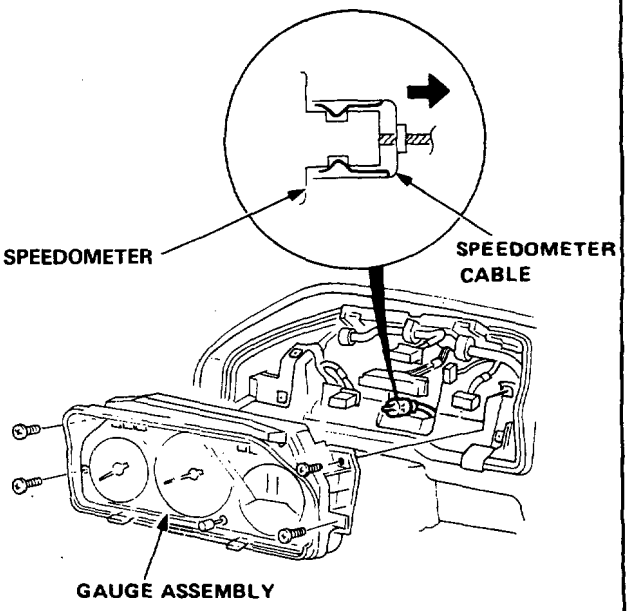

Gauge Assembly (KY model)

Bulb Locations

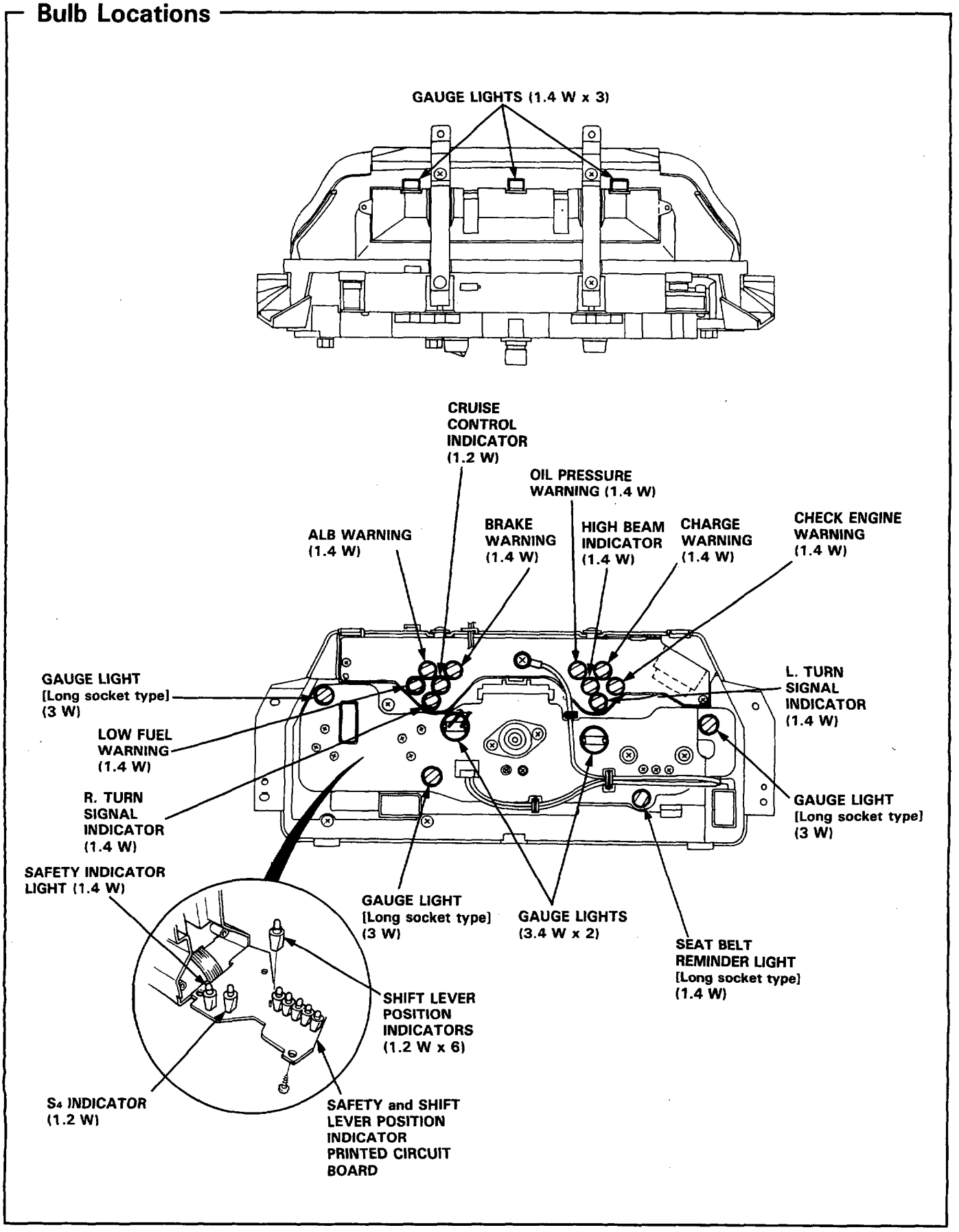

Disassembly

NOTE: Handle the terminals and printed circuits carefully to avoid damaging them.

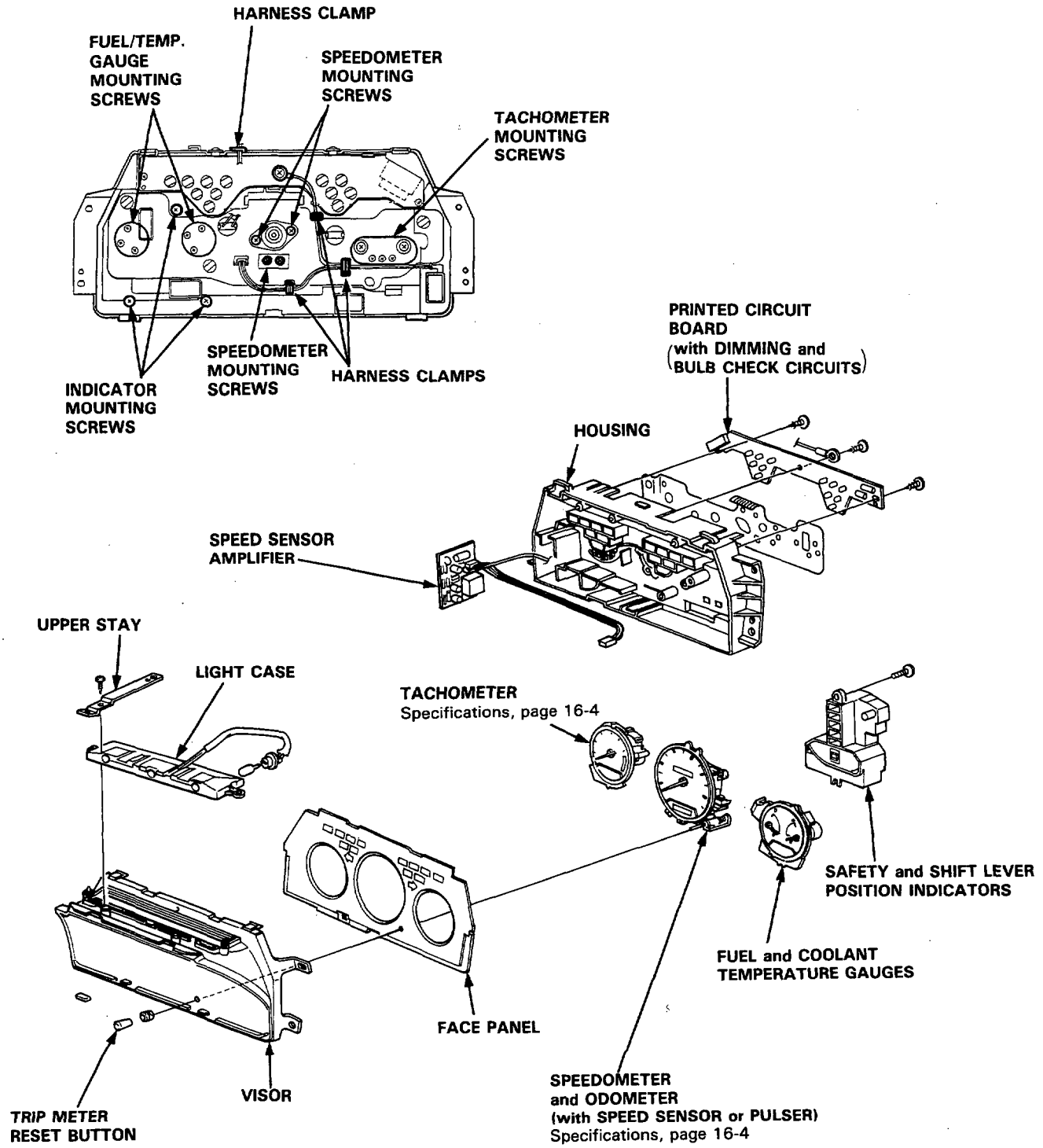

Gauge Assembly (KY model)

Speed Pulser Test

1. Remove the gauge assembly from the dashboard, then turn it over.

2. Break the lead off a pencil tip, then insert a pencil into the speedometer cable connector socket and turn it.
   There should be continuity 4 times between the ⊕ and ⊖ terminals per revolution.

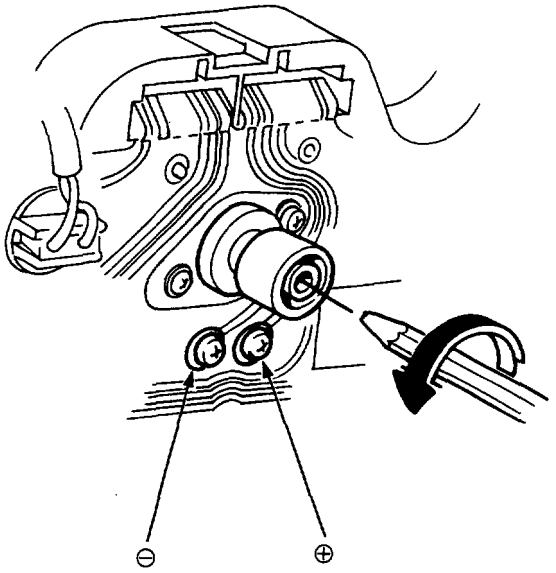

Integrated Control Unit (KY model)

Circuit Diagram

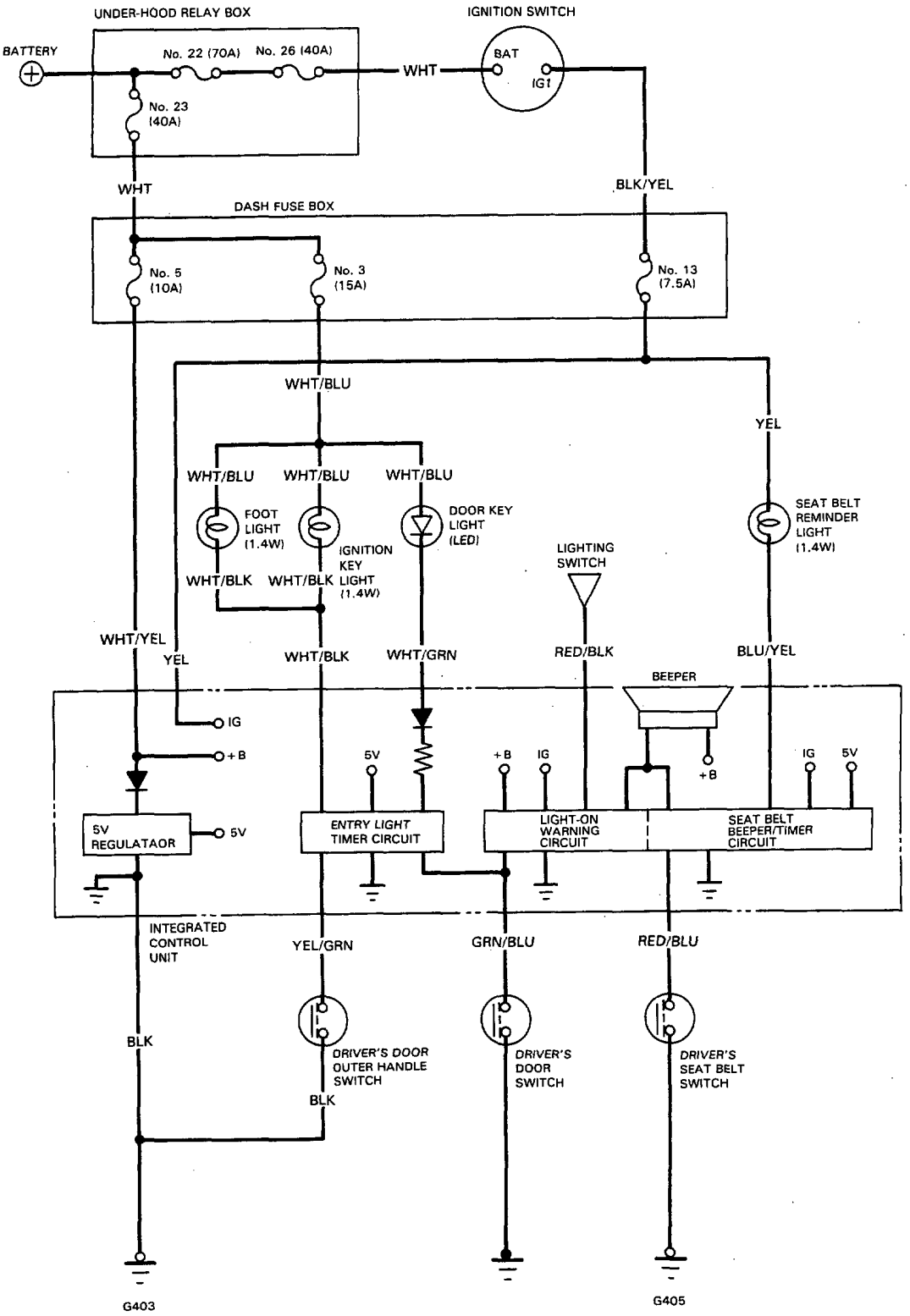

Integrated Control Unit (KY model)

Input Test

Description:
A multi-function control unit located under the driver's side of the dashboard, integrates the functions of the entry light timer, light-on warning and seat belt reminder onto one circuit board, sharing common circuit functions.

Input Test:
Remove the dashboard lower panel, and the dash relay holder from the bracket, to disconnect the 13-P connector from the control unit.
Make the following input tests at the harness pins.
If all tests prove OK, yet the system still fails to work, replace the control unit.

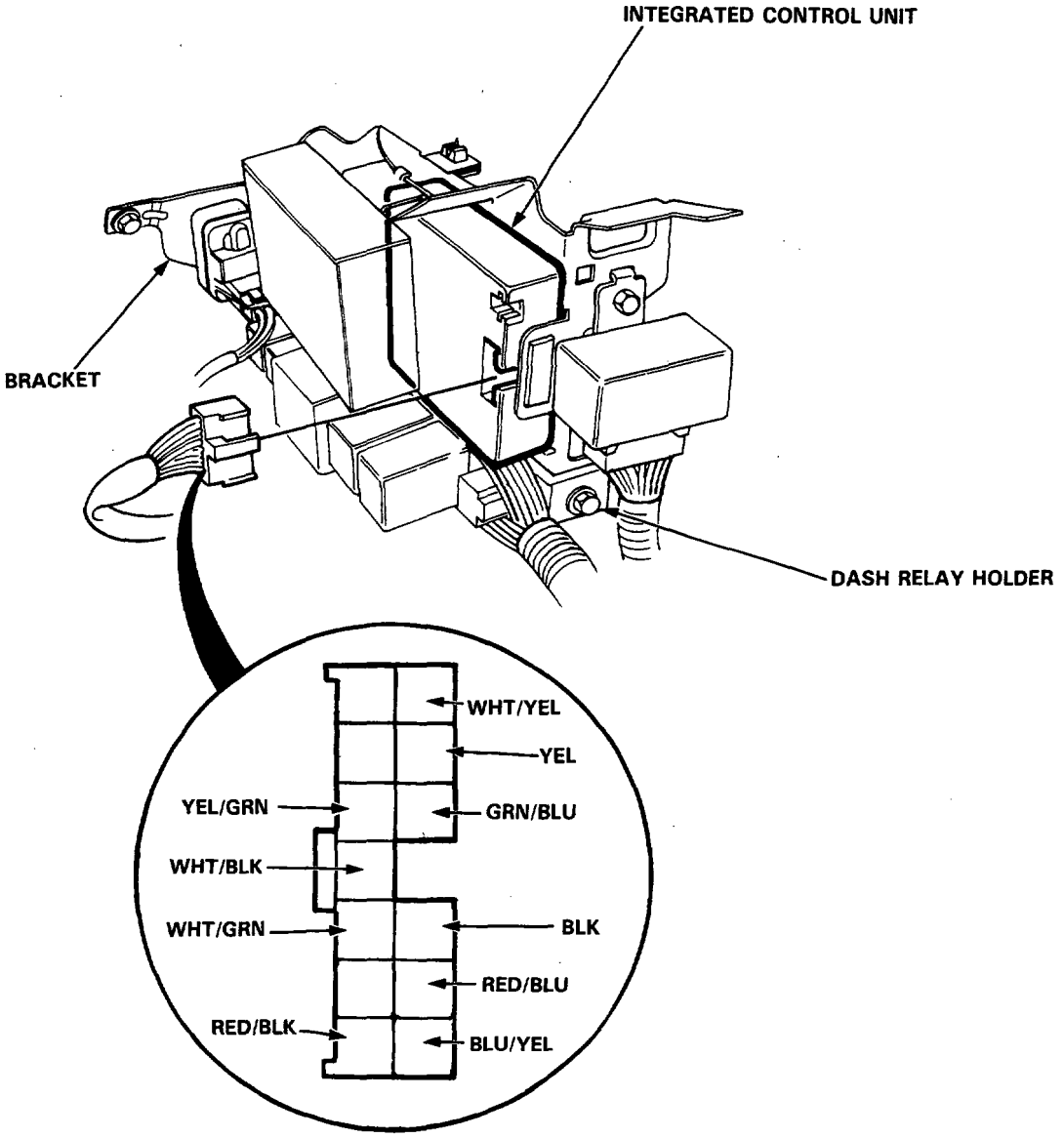

View from wire side

Entry Light Timer System:

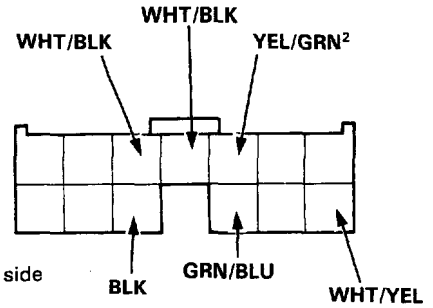

No.	Wire	Test condition	Test: desired result	Possible cause (if result is not obtained)
1	BLK	Under all conditions.	Check for continuity to ground: should be continuity.	• Poor ground (G403). • An open in the wire.
2	WHT/YEL	Under all conditions.	Check for voltage to ground: should be battery voltage.	• Blown No. 5 (10A) fuse. • An open in the wire.
3	YEL/GRN	Driver's door outer handle pulled.	Check for continuity to ground: should be continuity as the outer handle is pulled.	• Faulty outer handle switch. • Poor ground (G403). • An open in the wire.
4	WHT/BLK	Under all conditions.	Attach to ground: Ignition key and foot lights should come on.	• Blown bulb or No. 3 (15A) fuse. • An open in the wire.
5	GRN/BLU	Driver's door opened.	Check for continuity to ground: should be continuity. NOTE: Before testing, remove No. 3 (15A) fuse.	• Faulty driver's door switch. • An open in the wire.
6	WHT/GRN	Under all conditions.	Check for voltage to ground: should be about 10V.	• Faulty door key light. • An open in the wire.

Light-on Warning System:

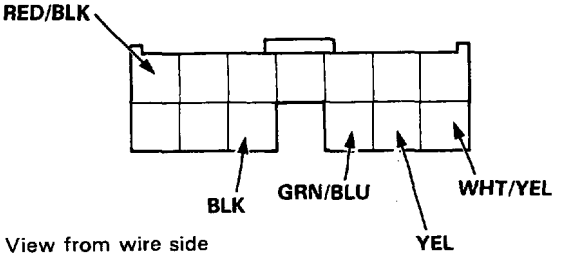

No.	Wire	Test condition	Test: desired result	Possible cause (if result is not obtained)
1	BLK	Under all conditions.	Check for continuity to ground: should be continuity.	• Poor ground (G403). • An open in the wire.
2	WHT/YEL	Under all conditions.	Check for voltage to ground: should be battery voltage.	• Blown No. 5 (10A) fuse. • An open in the wire.
3	YEL	Ignition switch ON.	Check for voltage to ground: should be battery voltage.	• Blown No. 13 (7.5A) fuse. • An open in the wire.
4	GRN/BLU [GRN/RED]	Left door opened.	Check for continuity to ground: should be continuity. NOTE: Before testing, remove No. 3 (15A) fuse.	• Faulty driver's door switch. • An open in the wire.
5	RED/BLK	Lighting switch ON.	Check for voltage to ground: should be battery voltage.	• Blown No. 7 (15A) fuse. • Faulty lighting switch. • An open in the wire.

(cont'd)

Integrated Control Unit (KY model)

Input Test (cont'd)

Seat Belt Reminder System:

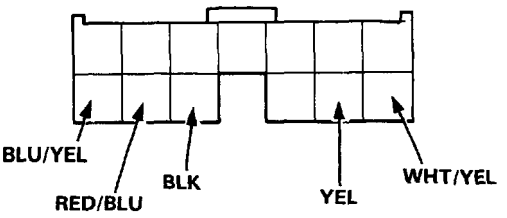

View from wire side

No.	Wire	Test condition	Test: desired result	Possible cause (if result is not obtained)
1	BLK	Under all conditions.	Check for continuity to ground: should be continuity.	• Poor ground (G403). • An open in the wire.
2	YEL	Ignition switch ON.	Check for voltage to ground: should be battery voltage.	• Blown No. 13 (7.5A) fuse. • An open in the wire.
3	WHT/YEL	Under all conditions.	Check for voltage to ground: should be battery voltage.	• Blown No. 5 (10A) fuse. • An open in the wire.
4	RED/BLU	Driver's seat belt not buckled.	Check for continuity to ground: should be continuity.	• Faulty seat belt switch. • Poor ground (G405). • An open in the wire.
5	BLU/YEL	Ignition switch ON.	Attach to ground: Seat belt reminder light should come on.	• Blown bulb. • An open in the wire.

Seat Belt Reminder System (KY model only)

Description

NOTE: Refer to page 16-9 for wiring description of the seat belt beeper/timer circuit, and page 16-12 for the input test of the beeper/timer circuit.

With the ignition switch in "Run" or "Start", voltage is applied to the beeper/timer of the integrated control unit. When you unbuckle the driver's seat belt, the beeper/timer circuit senses ground. With voltage at the YEL terminal and ground at the RED/BLU terminal, the seat belt beeper sounds and the timer contacts close and open. This causes the seat belt reminder light to flash on and off. After 5 seconds the alarm stops and the contacts remain open.

Seat Belt Switch Test

1. Slide the drivers seat forward until the seat belt center anchor bolt is accessible, to disconnect the 2-P connector from the seat belt switch.
2. There should be continuity between the A and B terminals when the driver's seat belt is not buckled. There should be no continuity when the driver's seat belt is buckled.

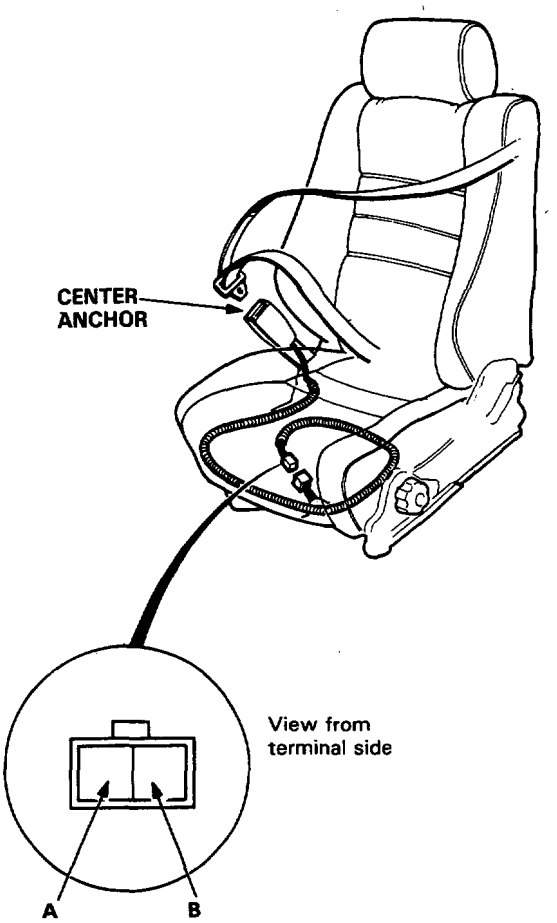

Brake Lights (KQ model)

Circuit Diagram

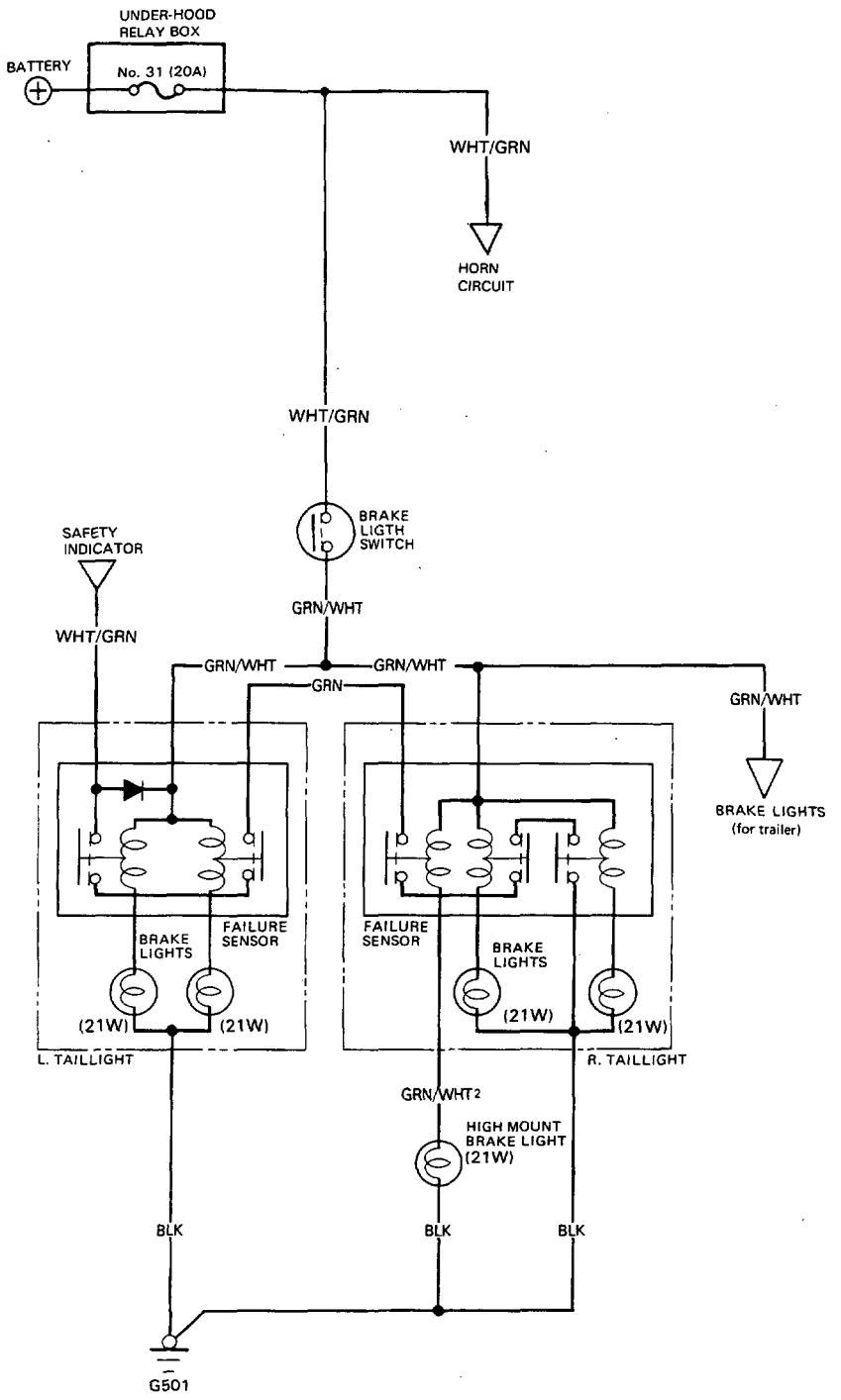

Test

1. Test brake light switch by pushing the brake pedal.

2. If the brake lights do not go on, check the No. 31 (20 A) fuse in the under-hood relay box, and the brake light bulbs in the taillight assembly and the high mount brake light.

3. If the fuse and bulbs are OK, disconnect the 4-P connector from the brake light switch.

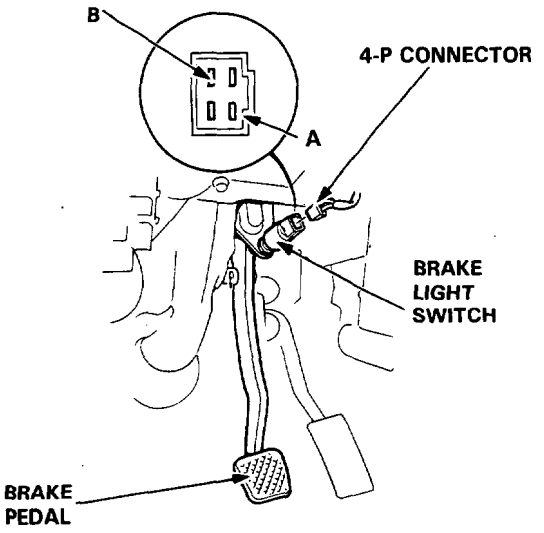

4. Check for continuity between the A and B terminals.
   There should be continuity with the brake pedal pushed.

   - If no continuity, replace the switch or adjust pedal height.

   - If there is continuity, but the brake lights do not go on:
     - Poor ground (G501).
     - An open in the WHT/GRN or GRN/WHT wire.
     - Faulty brake light failure sensors.

High Mount Brake Light Replacement

1. Remove the 2 screw covers and screws, then remove the high mount brake light on the rear shelf.

2. Disconnect the 2-P connector from the light assembly.

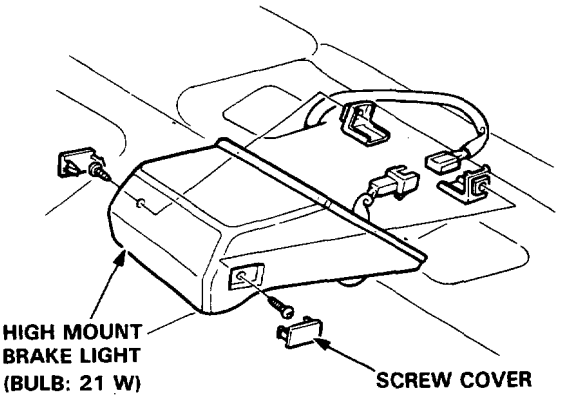

3. Turn the socket 45° counterclockwise to remove the bulb.

4. Install the high mount brake light in the reverse order of removal, and clean the rear window glass before installing.

Chassis and Engine Numbers

Vehicle Identification Number

JHMKA31500C200001

Manufacturer
JHM: HONDA MOTOR CO., LTD., JAPAN.

Vehicle Type
KA3: LEGEND COUPE

Transmission and Body Type
1: 5-Speed Manual 2D Coupe
2: 4-Speed Automatic 2D Coupe

Vehicle Grade
5: Except KE model with leaded gasoline engine
6: KE model with leaded gasoline engine
7: With SRS Air bag

Fixed Code

Auxiliary Number

Plant
C: Saitama Factory Sayama Plant

Model Year
2: 1990

Serial Number

Engine Serial Number (Except KQ)

C27A2-2300001

Engine Type
C27A1: 2.7 ℓ with catalytic converter (KF, KG, KX, KS, KW, KB)
C27A2: 2.7 ℓ without catalytic converter (KE, KY)

Transmission Group
23: 5-Speed manual transmission
24: Automatic transmission

Serial Number

Engine Serial Number (KQ)

C27A1-2800001

Engine Type
C27A1: 2.7 ℓ with catalytic converter

Serial Number

Transmission Number
(Manual Transmission)

G3E4-3000001

Transmission Type
G3E4: KF , KG, KX, KS, KW, KB, KE
G3W4: KY

Serial Number

Transmission Number
(Automatic transmission)

PL5X-4000001

Transmission Type

Serial Number

Identification Number Locations

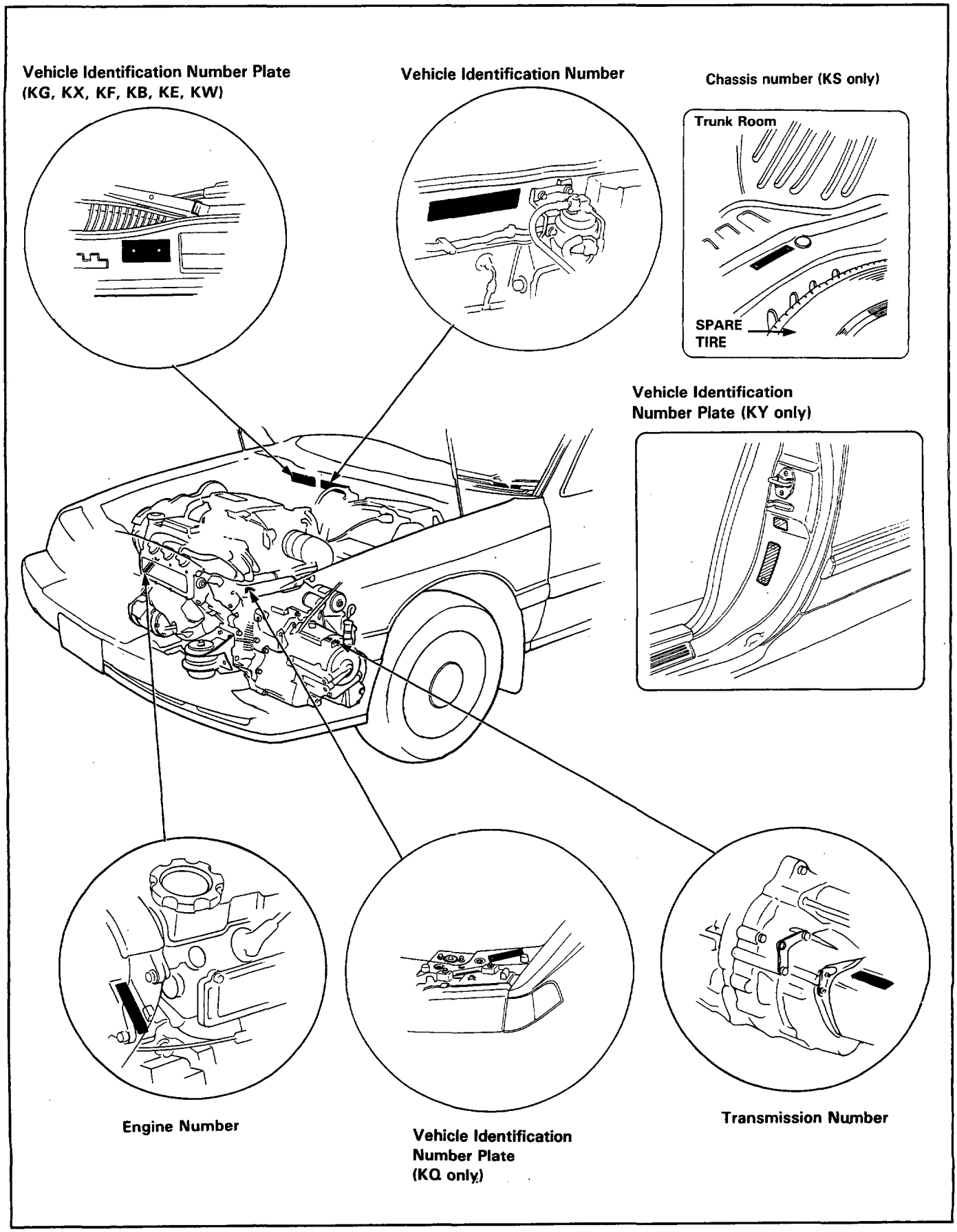

Label Locations

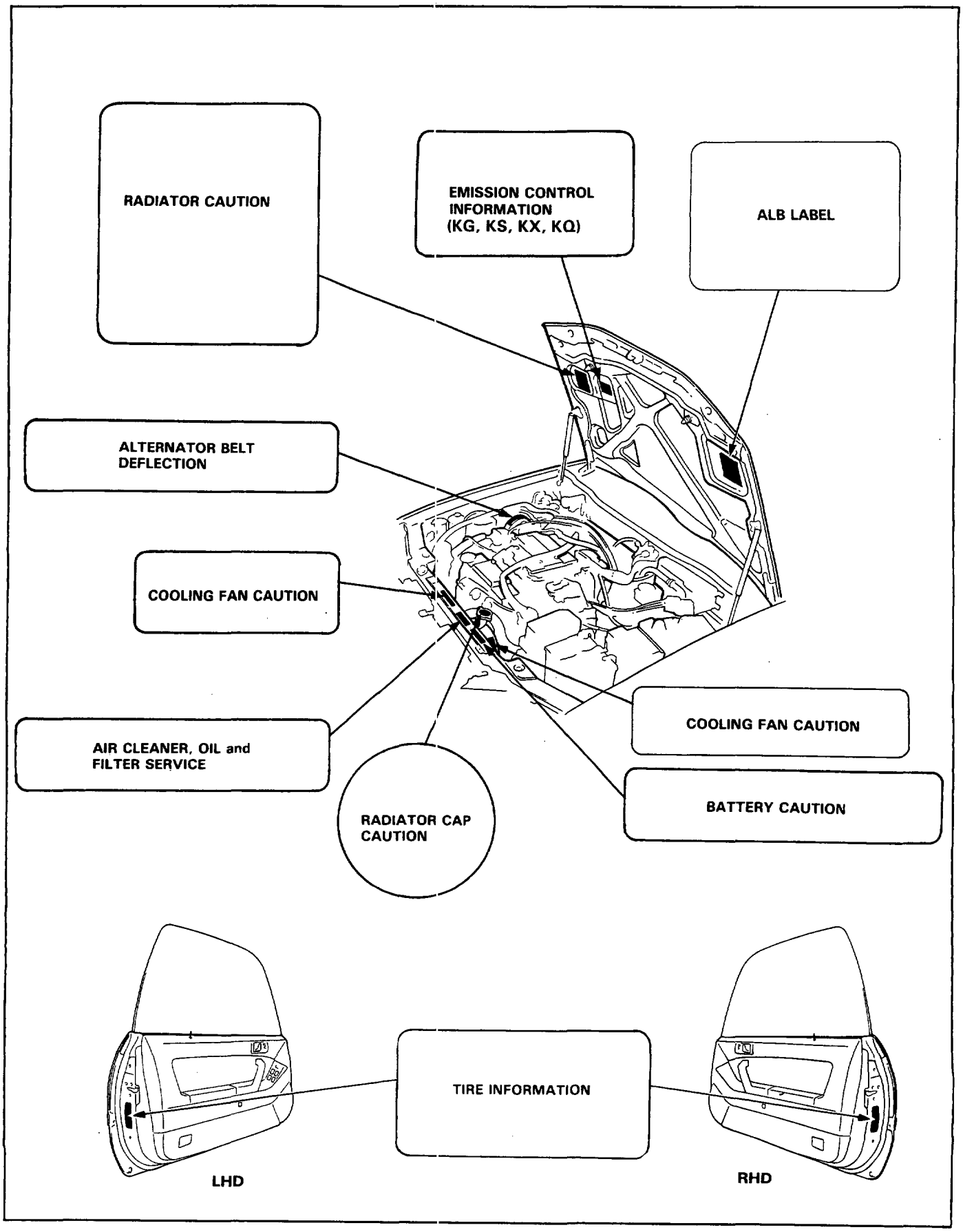

Lift and Support Points

Hoist

1. Place the lift blocks as shown.
2. Raise the hoist a few inches and rock the car to be sure it is firmly supported.
3. Raise the hoist to full height and inspect lift points for solid support.

⚠WARNING When heavy rear components such as suspension, fuel tank, spare tire and trunk lid/hatch are to be removed, place additional weight in the trunk before hoisting. When substantial weight is removed from the rear of the car, the center of gravity may change and can cause the car to tip forward on the hoist.

NOTE: Since each tire/wheel assembly weighs approximately 14 kg (30 lbs), placing the front wheels in the trunk can assist with the weight transfer.

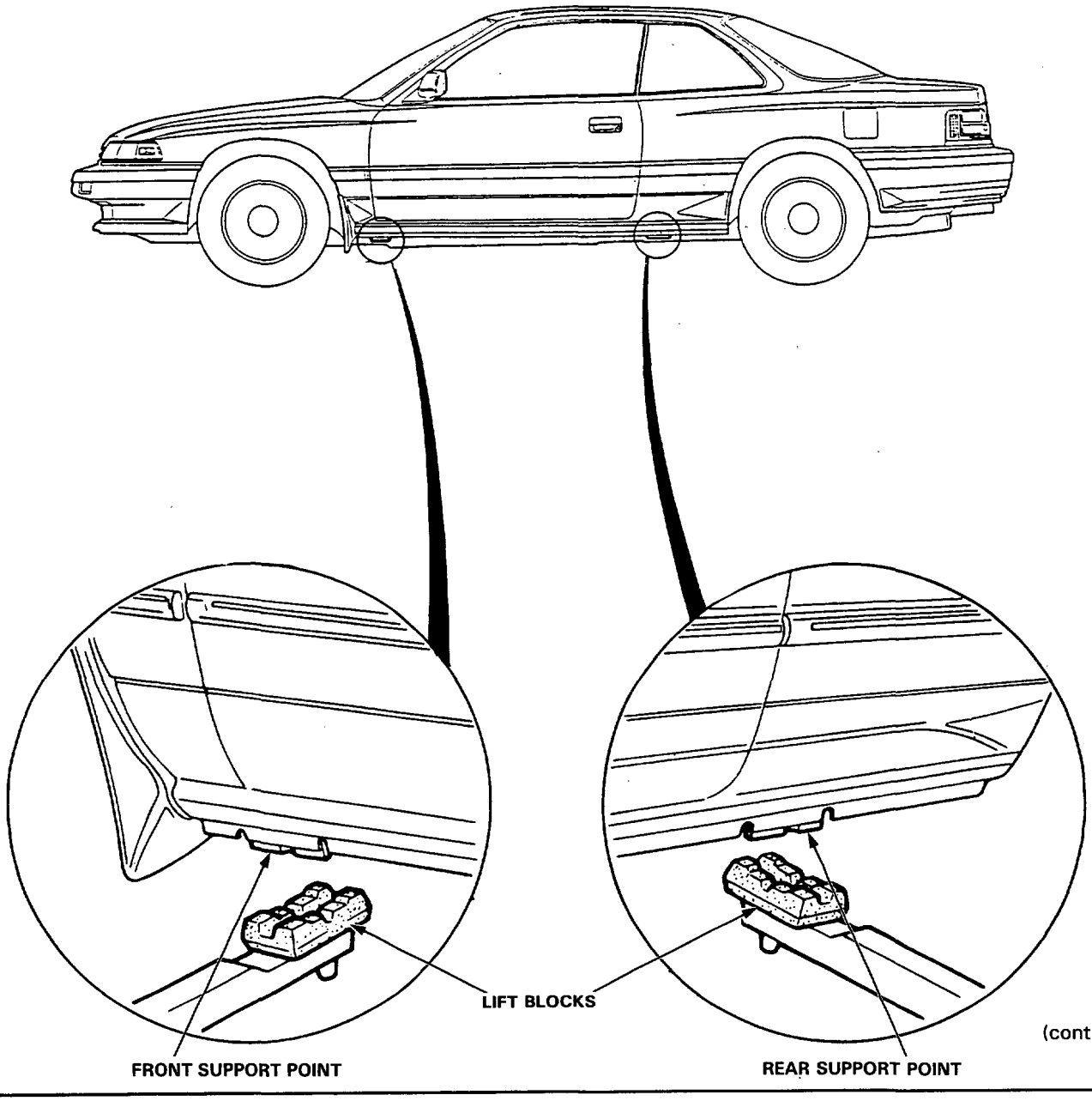

(cont'd)

Lift and Support Points (cont'd)

Floor Jack

1. Set the parking brake and block the wheels that are not being lifted.
2. When lifting the rear of the car, put the gearshift lever in reverse (Automatic in PARK).
3. Raise the car high enough to insert the safety stands.
4. Adjust and place the safety stands as shown on page 1-7 so the car will be approximately level, then lower the car onto them.

⚠WARNING

- **Always use safety stands when working on or under any vehicle that is supported by only a jack.**
- **Never attempt to use a bumper jack for lifting or supporting the car.**

Front

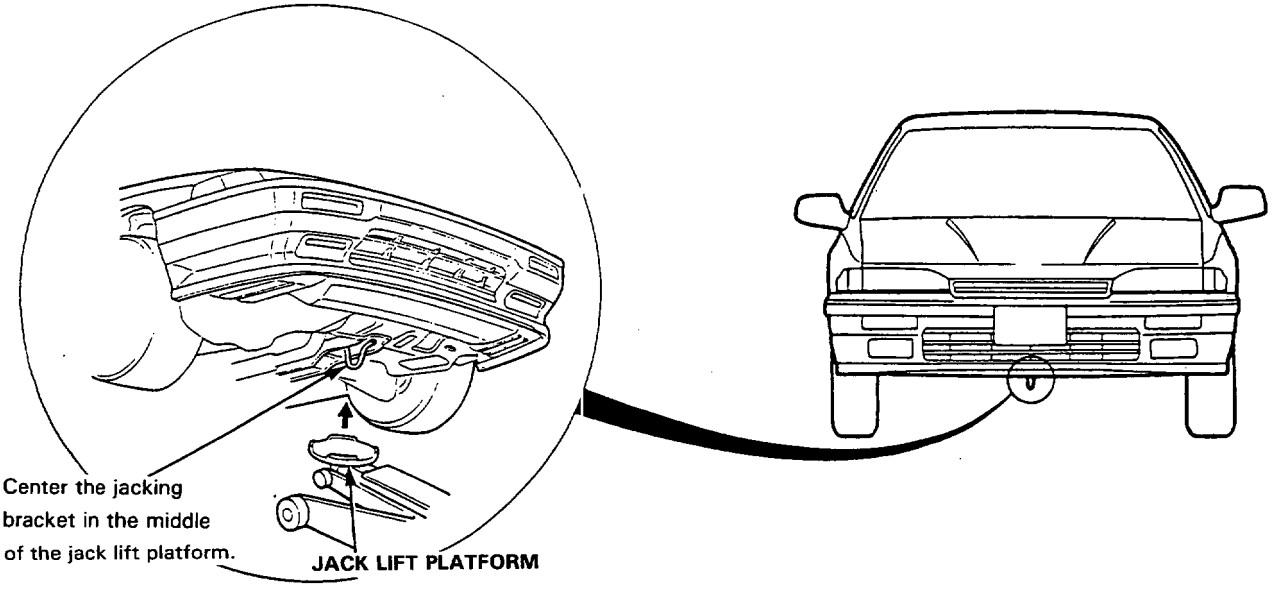

Rear

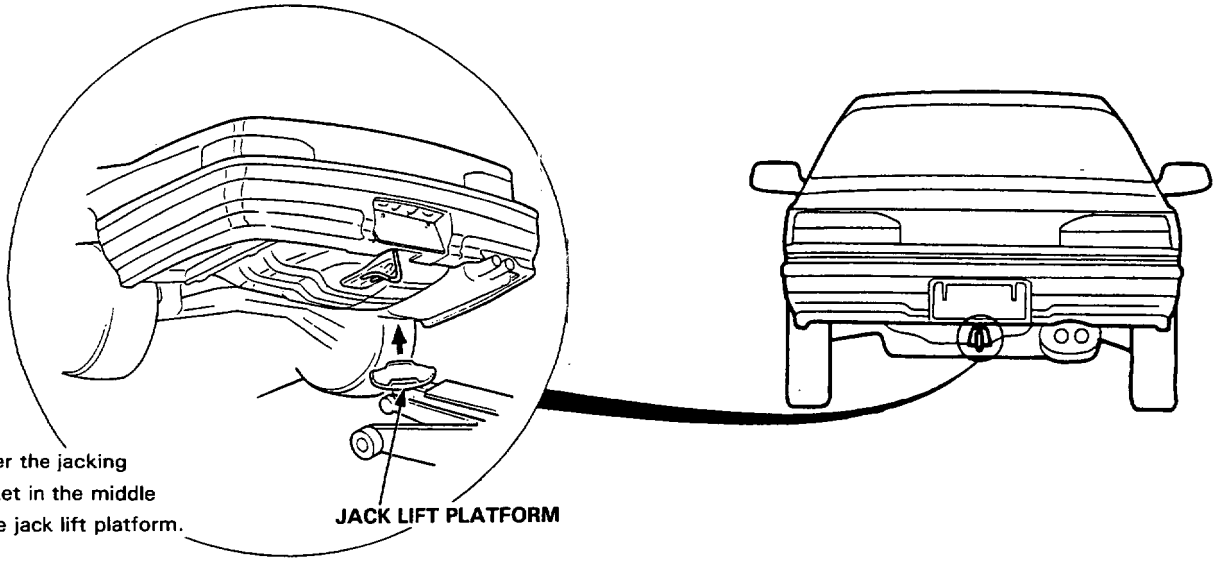

Safety Stands

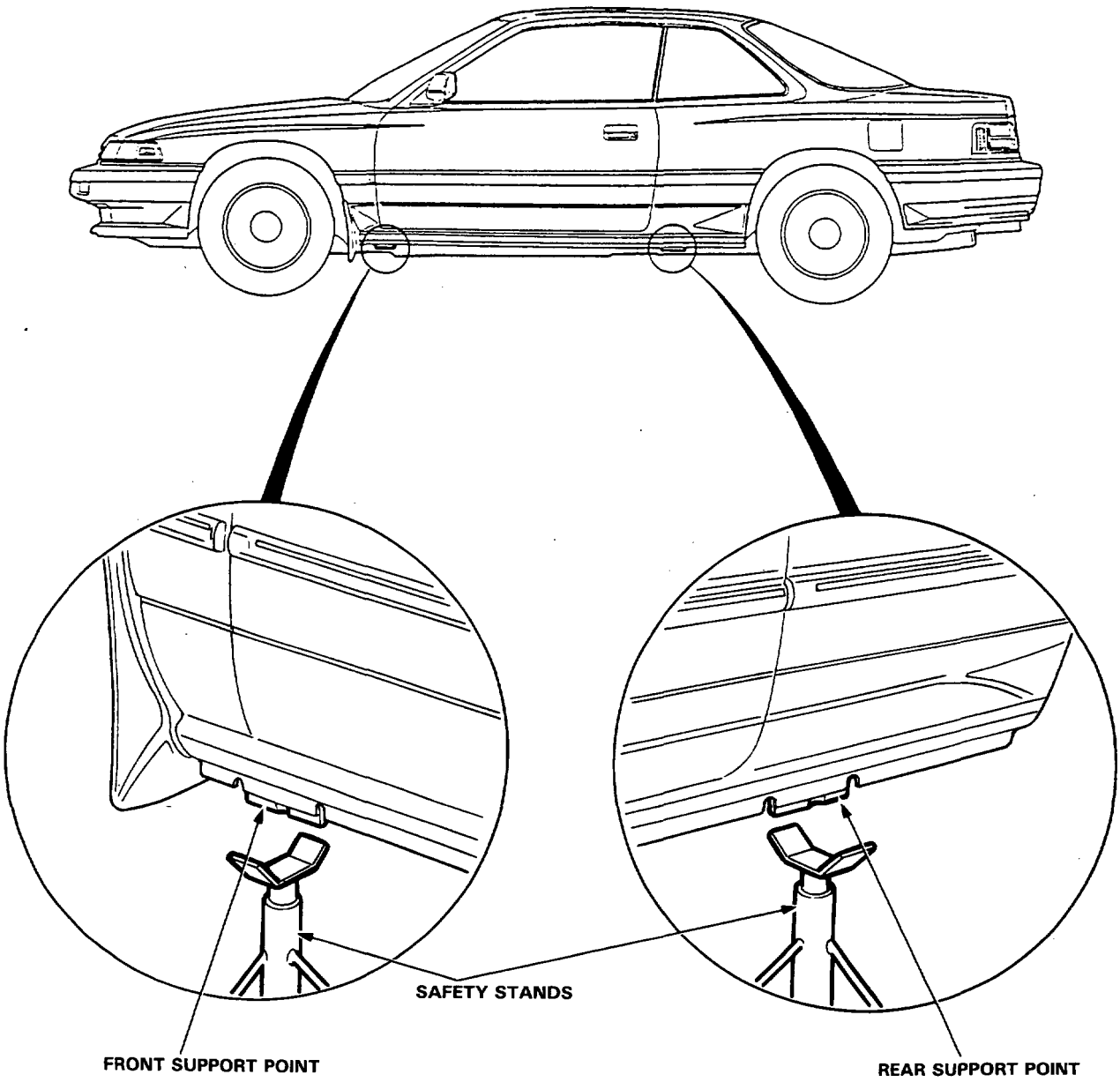

Towing

If possible, always tow the car with the front wheels off the ground. The tow truck driver should position wood spacer blocks between the car's frame and the chains and lift straps, to avoid damaging the bumper and the body under it.
Do not use the bumpers to lift the car or to support the car's weight while towing. Check local regulations for towing. A chain may be attached to the hook shown in the picture. Do not attach a tow bar to either bumper.

⚠WARNING
DO NOT push or tow a car to start it. The forward surge when the engine starts could cause a collision. On some types, also, under some conditions, the catalytic converter could be damaged. A car equipped with an automatic transmission cannot be started by pushing or towing.

If the car is to be towed with the front wheels on the ground observe the following precautions:
Manual Transmission
Shift the transmission to Neutral and turn the ignition key to the "I" position.
Automatic Transmission
First, check the automatic transmission fluid level. Start the engine and shift to D, then to N. Return the ignition key to the "I" position.

CAUTION:
- **Do not tow with front wheels on the ground when the automatic transmission fluid level is low or the transmission cannot be shifted with the engine running.**
- **Do not exceed 55 km/h (35 mph) or tow for distances of more than 80 km (50 miles).**

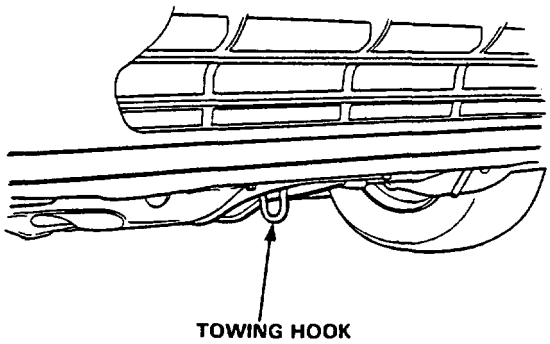

Special Caution Items For This Car

1. The engine hood opens almost vertical during installation or removal of the engine or transmission for easy operation.
   - Remove the wiper blade.
   - Fix the engine hood in the vertical position by removing the open stay mounting bolt on the hood side and fitting it to the mounting hole nearer to the hinge.

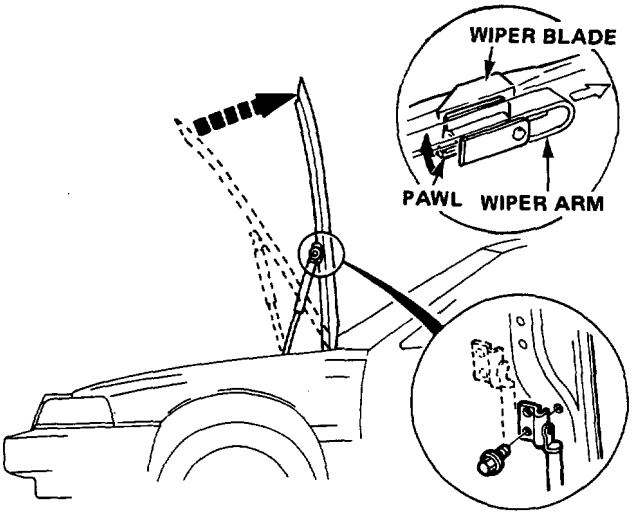

2. ALB piping system servicing
   - Disassemble the ALB piping system after relieving the high-pressured brake fluid.
   - Otherwise, the high-pressured brake fluid will burst out and it is very dangerous.
   - See section 13 how to relieve the high-pressured brake fluid.

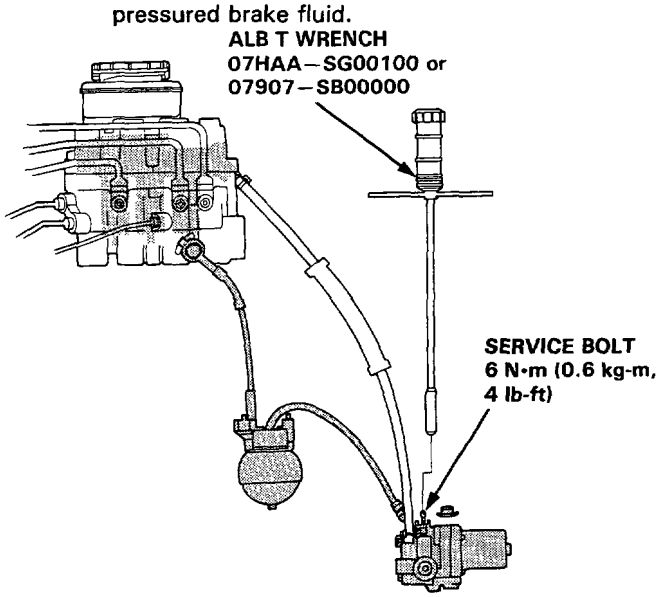

3. Fuel Line Servicing
   - Relieve fuel pressure by loosening the service bolt provided on the top of the fuel filter before disconnecting a fuel hose or a fuel pipe.

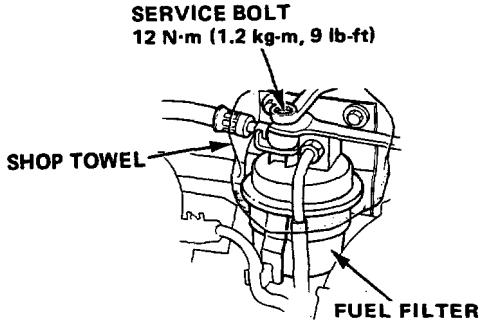

   - Be sure to replace washers, O-rings, and rubber seal with new ones when servicing fuel line parts.
   - Always apply oil to the surfaces of O-rings and seal rings before installation. Never use brake fluid, radiator fluid, vegetable oils or alcohol-based oils.

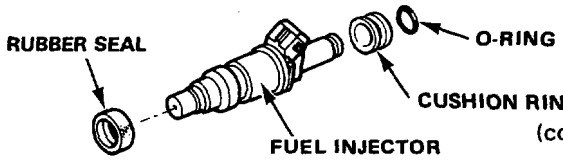

(cont'd)

Special Caution Items For This Car (cont'd)

- When assembling the flare joint of the high-pressure fuel line, clean the joint and coat with new engine oil.
- When installing an injector, check the angle of the coupler. The center line of the coupler should align with the setting mark on the injector holder.

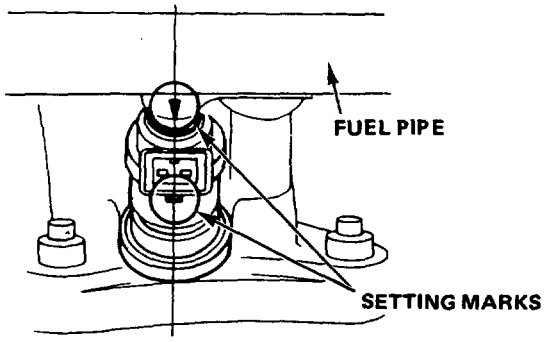

4. Inspection for fuel leakage
   - After assembling fuel line parts, turn ON the ignition switch (do not operate the starter) so that the fuel pump is operated for approximately two seconds and the fuel is pressurized. Repeat this operation two or three times and check whether any fuel leakage has occurred in any of the various points in the fuel line.

5. Installation of an amateur radio for cars equipped with PGM-FI, A/T CONTROL, CRUISE CONTROL and ALB.
   Care has been taken for the PGM-FI, A/T CONTROL, CRUISE CONTROL and ALB control units and its wiring to prevent erroneous operation from external interference, but erroneous operation of the control unit may be caused by entry of extremely strong radio waves. Attention must be paid to the following items to prevent erroneous operation of the control unit.
   - The antenna and the body of the radio must be at least 200 mm (7.9 in.) away from the control unit.

   The control unit locations
   - PGM-FI control unit: Under the dashboard, passenger's side
   - A/T CONTROL unit: Under the right side seat
   - CRUISE CONTROL unit: Under the dashboard, driver's side
   - ALB control unit: Behind the rear seat
   - Do not lead the antenna feeder and the coaxial cable over a long distance parallel to the wiring, and when crossing with the wiring is required, execute crossing at a right angle.
   - Do not install a radio with a large output (max. 10 W).

6. Apply liquid gasket to the transmission, oil pump cover, left side cover and water outlet. Use HONDA genuine liquid gasket, Part No, OY740–99986.
   - Check that the mating surfaces are clean and dry before applying liquid gasket. Degrease the mating surfaces if necessary.
   - Apply liquid gasket evenly, being careful to cover all the mating surface.
   - To prevent leakage of oil, apply liquid gasket to the inner threads of the bolt holes.
   - Do not install the parts if 20 minutes or more have elapsed since applying liquid gasket. In that case, reapply liquid gasket after removing the old residue.
   - Wait at least 30 minutes before filling with the appropriate liquid (engine oil, coolant and other similar fluids).

7. Since a V-type 6-cylinder engine is used, carefully prevent removed bolts, nuts and washers from falling into the valley between V-type cylinders around the intake manifold during maintenance.
   - Putting shop towel in the gap in the V-bank vallery is recommended to prevent dropping.

8. The oil filter case is removed from the engine block during engine removal and installation. If foreign matter enters the oil path, the lubrication system may clog. Be sure to fit a blind plug to the oil hole.

9. The layout of the engine and transmission is the reverse of that of conventional Honda cars. The engine is mounted on the right side, and the transmission on the left. The direction of engine revolution, therefore, is reversed. It is clockwise as viewed from the timing belt pulley.
   - After timing belt adjustment, always rotate the engine clockwise as viewed from the pulley side.

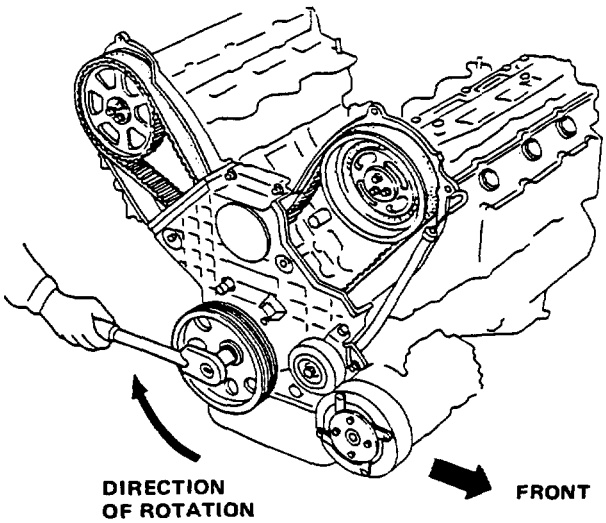

10. Cylinder Nos. are No. 1, No. 2 and No. 3 from the timing belt side of the rear bank cylinders, and No. 4, No. 5 and No. 6 from the timing belt side of the front bank cylinders.

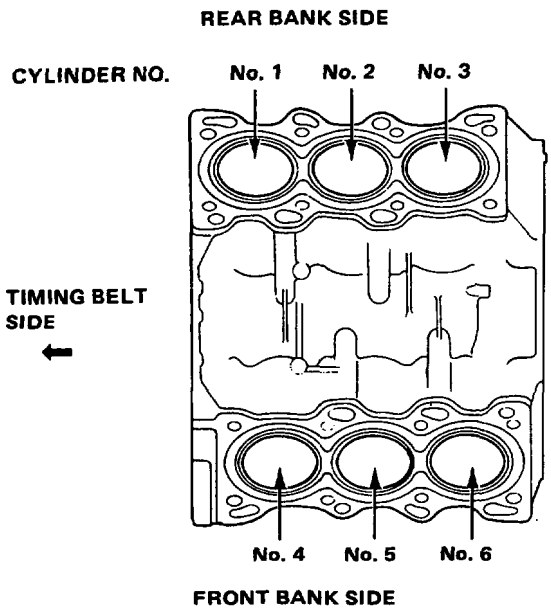

11. The hydraulic tappet has been adopted to eliminate the need for valve clearance adjustment. After disassembling the valve, head and cylinder or after maintenance of the valve train, always carry out the following operations:
    - Bleed the air from the chamber when inspecting the hydraulic tappet.
    - Clean each oil path in the engine. Use an air nozzle to eliminate any clogging with dirt, etc.
    - Before installing the camshaft bearing caps, fill the oil path in the hydraulic tappet with engine oil from the oil filler on the cylinder head.
    - After installing the camshaft, properly adjust the exhaust rocker arm adjusting screw.

CAUTION: Observe all safety precautions and notes while working.

1. Protect all painted surfaces and seats against dirt and scratches with a clean cloth or vinyl cover.

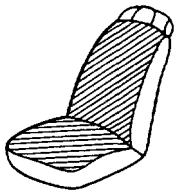

2. Work safely and give your work your undivided attention. When either the front or rear wheels are to be raised, block the remaining wheels securely. Communicate at frequently as possible when work involves two or more workers. Do not run the engine unless the shop or working area is well ventilated.

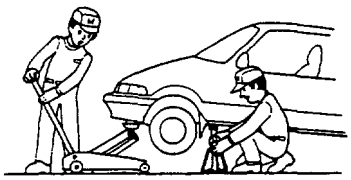

3. Prior to removing or disassembling parts, they must be inspected carefully to isolate the cause for which service is necessary. Observe all safety notes and precautions and follow the proper procedures as described in this manual.

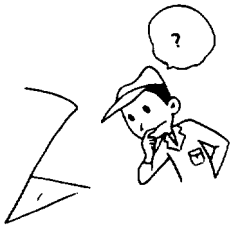

4. Mark or place all removed parts in order in a parts rack so they can be reassembled in their original places.

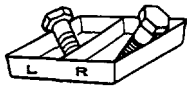

(cont'd)

Preparation of Work

(cont'd)

5. Use the special tool when use of such a tool is specified.

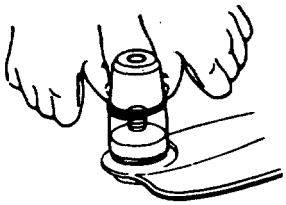

6. Parts must be assembled with the proper torque according to the maintenance standards established.

7. When tightening a series of bolts or nuts, begin with the center or large diameter bolts and tighten them in crisscross pattern in two or more steps.

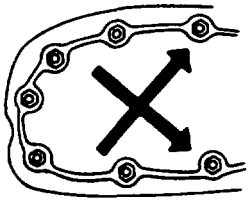

8. Use new packings, gaskets, O-rings and cotter pins whenever reassembling.

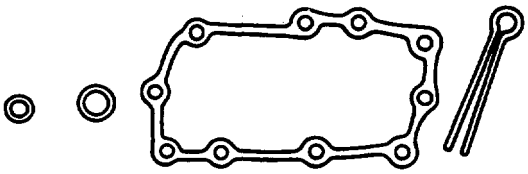

9. Use genuine HONDA parts and lubricants or those equivalent. When parts are to be reused, they must be inspected carefully to make sure they are not damaged or deteriorated and are in good usable condition.

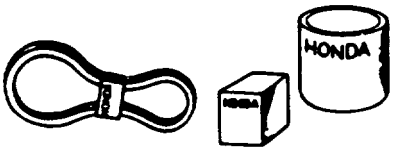

10. Coat or fill parts with specified grease as specified (page 4-2). Clean all removed parts with solvent upon disassembly.

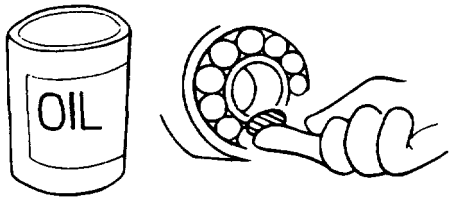

11. Brake fluid and hydraulic components
    - When replenishing the system, use extreme care to prevent dust and dirt from entering the system.
    - Do not mix different brands of fluid as they may not be compatible.
    - Do not reuse drained brake fluid.
    - Brake fluid can cause damage to painted surfaces. Wipe up spilled fluid at once.
    - After disconnecting brake hoses or pipes, be sure to plug the openings to prevent loss of brake fluid.
    - Clean all disassembled parts only in clean Blow open all holes and passages with compressed air.

    - Keep disassembled parts from air-borne dust and abrasives.
    - Check that parts are clean before assembly.

12. Avoid oil or grease getting on rubber parts and tubes, unless specified.

13. Upon assembling, check every part for proper installation and operation.

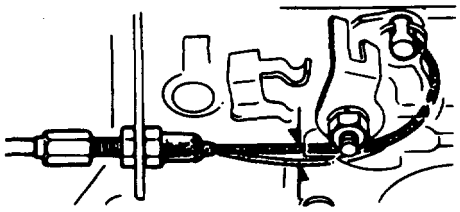

- Before making any repairs on electric wires or parts, disconnect the battery cables from the battery starting with the negative (−) terminal.

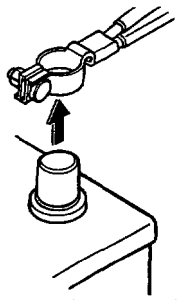

- After making repairs, check each wire or part for proper routing and installation. Also check to see that they are connected properly.
- Always connect the battery positive (+) cable first, then connect the negative (−) cable.

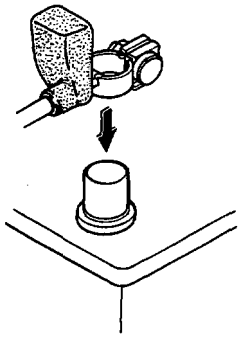

- Coat the terminals with clean grease after connecting the battery cables.
- Don't forget to install the terminal cover over the positive battery terminal after connecting.
- Before installing a new fuse, isolate the cause and take corrective measures, particularly when frequent fuse failure occurs.

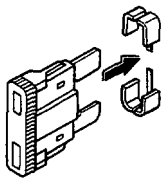

- Be sure to install the terminal cover over the connections after a wire or wire harness has been connected.

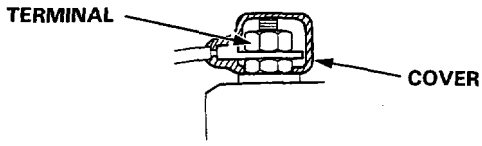

- As to locking connectors, be sure to disengage the lock before disconnecting.
- Conventional connectors may be of two types, those in which the lock is pressed to remove, and those in which the lock is pulled up to remove. Be sure to ascertain the type of locking device before beginning work. The following is a depiction of the means of disconnecting various typical connectors.

Press to disengage:

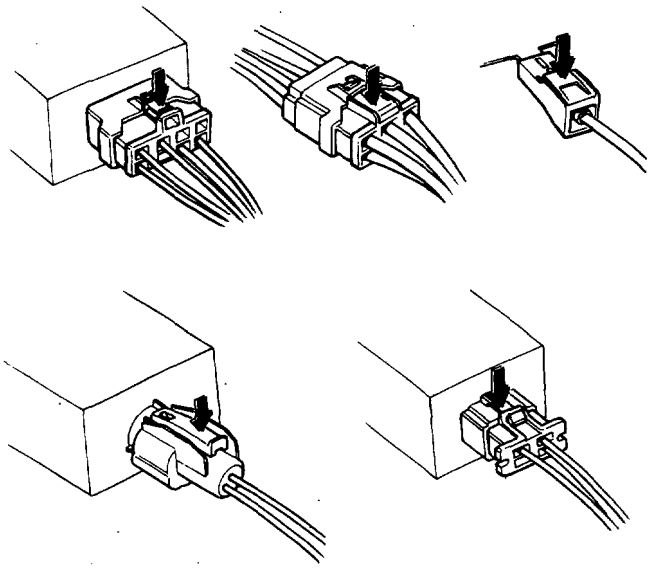

Pull up to disengage:

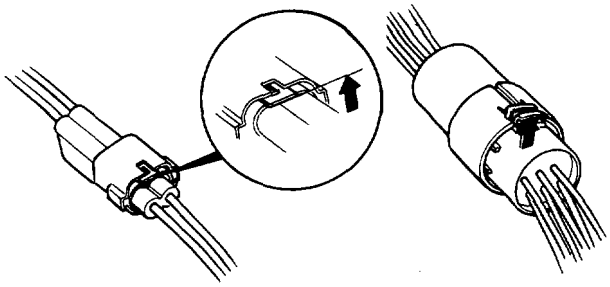

(cont'd)

Electrical (cont'd)

When new type connectors are used, connection and disconnection of them should be done paying attention to the following precautions.

- Because all the connectors except terminal of 1-P are equipped with push-down type locks, unlock them first before disconnecting the connectors.

- On the connectors installed on the bracket a pull type lock is equipped between the bracket and the connector.
  Some connectors of this type can not be disconnected unless they are removed from their brackets. When disconnecting, check their shapes.

- On the bracket mounted connector with dual locks, remove the connector from the bracket before disconnecting.

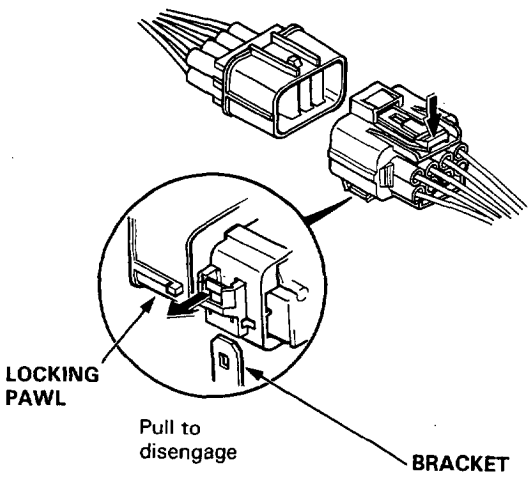

- Push the locking tab to disconnect.

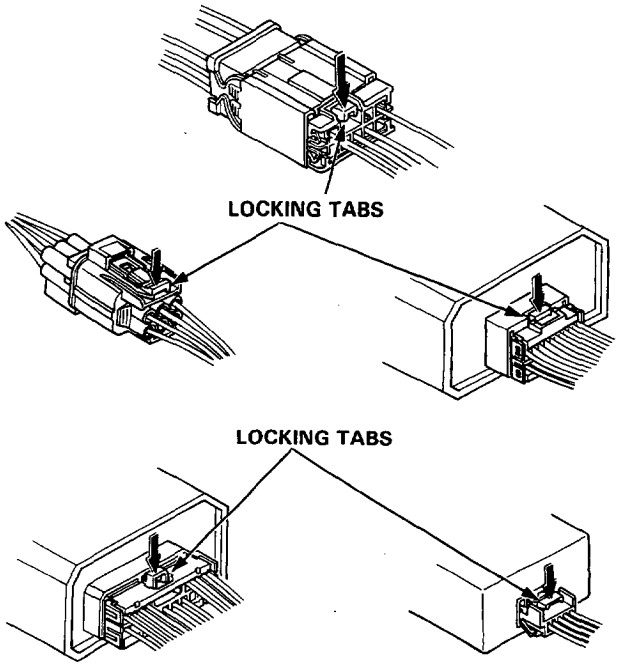

- Pull the locking tab to remove the connector from the bracket.

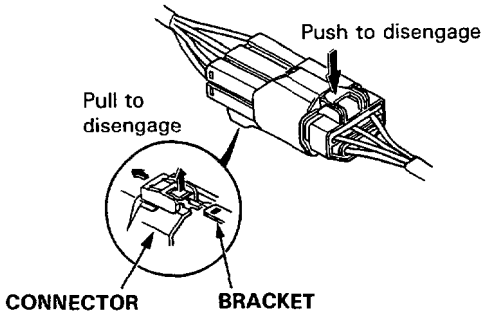

- When disconnecting locks, first press in the connector tightly (to provide clearance to the locking device), then operate the tab fully and remove the connector in the designated manner.

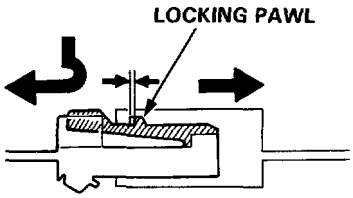

- When disconnecting a connector, pull it off from the mating connector by holding on both connectors.

- Never try to disconnect connectors by pulling on their wires.

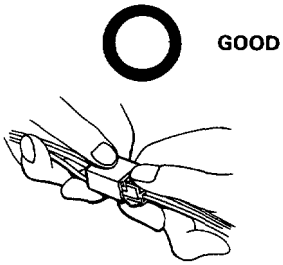

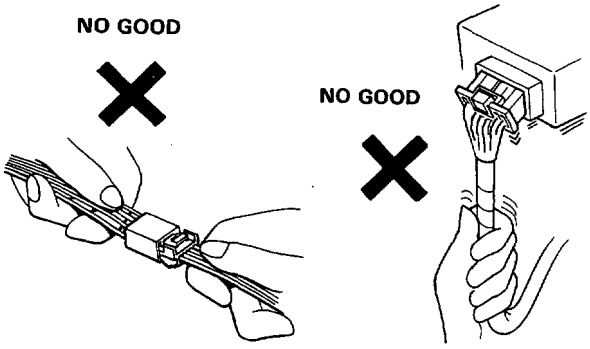

- Place the plastic cover over the mating connector after reconnecting. Also check that the cover is not distorted.

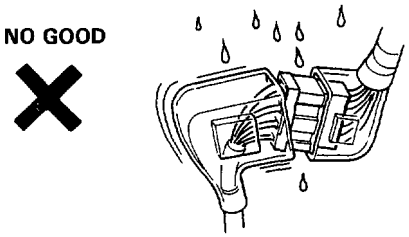

- Before connecting connectors, check to see that the terminals are in place and not bent or distorted.

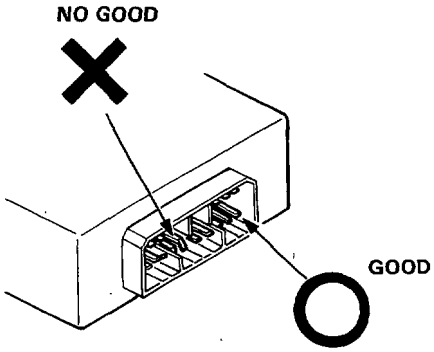

- Check for loose retainer and rubber seals.
  The illustration shows examples of terminal and seal abnormality.

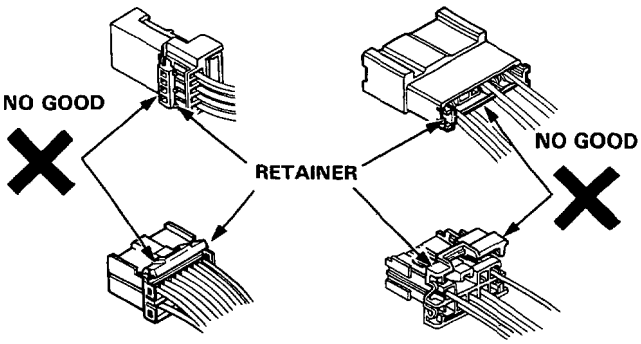

- Example of waterproof connector:

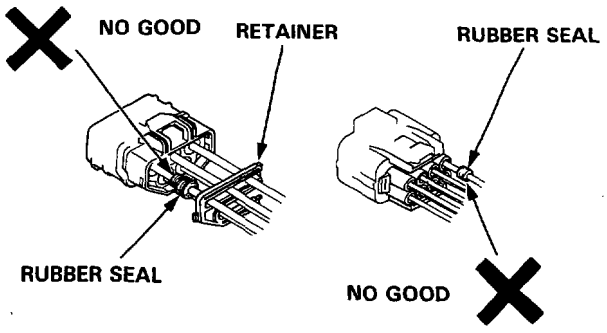

(cont'd)

Electrical (cont'd)

- For the connector which uses insulation grease, clean the connector then apply grease if the grease is insufficient or contaminated.

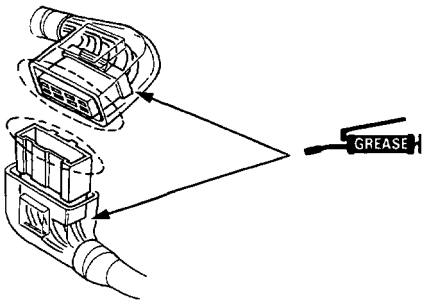

- Insert the connector tightly and make sure it is securely locked.
- Check all the wire harnesses are connected.
- There are two types of locking tab: one that you have to push and the other you should not touch when connecting the connector. Check the shape of the locking tab before connecting.
- The locking tab having a taper end should not be touched when connecting.

- The locking tab with an angle end should be pushed when connecting.

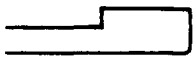

- Insert connectors fully until they will no longer go.
- The connectors must be aligned and engaged securely.
- Do not use wire harnesses with a loose wire or connector.

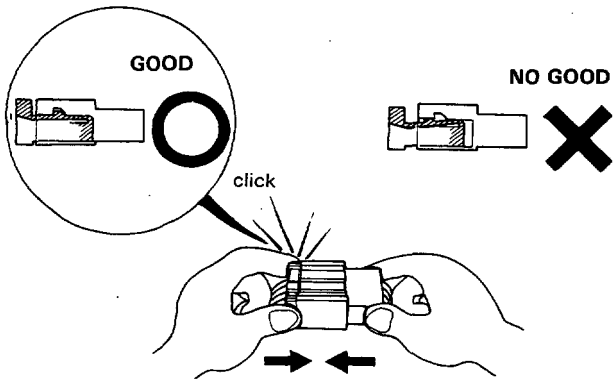

- Before connecting, check each connector cover for damage. Also make sure that the female connector is tight and not loosened from the previous use.

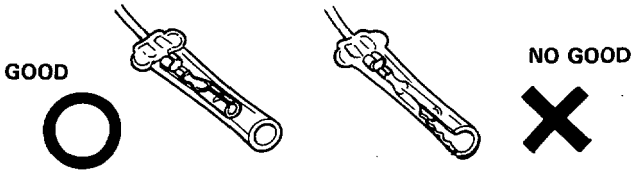

- Insert male connectors into the female connectors fully until they will no longer go.
- Be sure that plastic cover is placed over the connection.
- Position the wires so that the open end of the cover faces down.

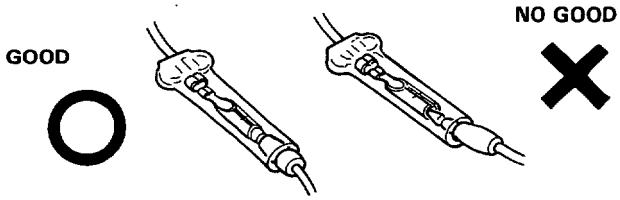

- Secure wires and wire harness to the frame with their respective wire bands at the designated locations.
  Position the wiring in the bands so that only the insulated surfaces contact the wires or harnesses.
- Remove with care not to damage the lock.

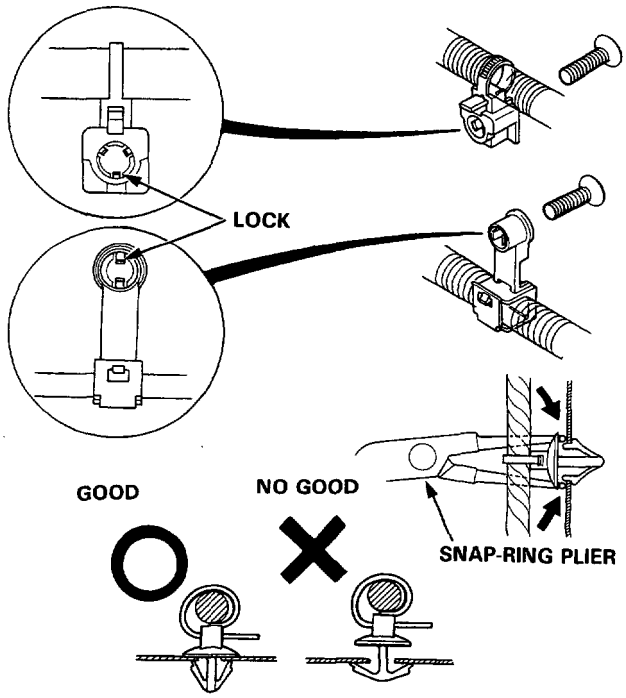

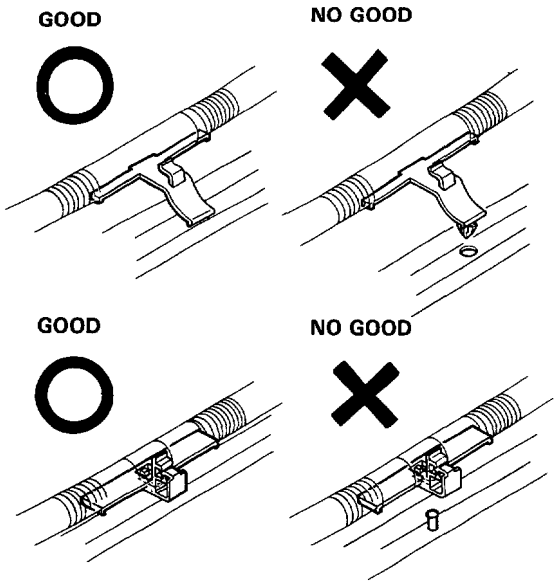

- After clamping, check each harness to be certain that it is not interfering with any moving or sliding parts of the vehicle.
- Keep wire harnesses away from the exhaust pipes and other hot parts.

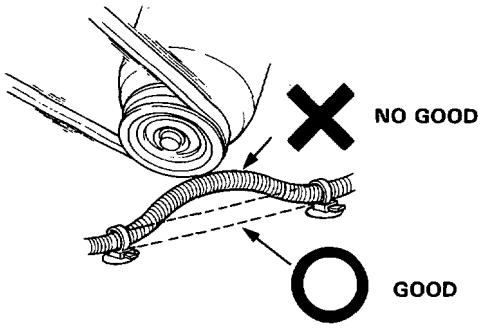

- Always keep a safe distance between wire harnesses and any heated parts.

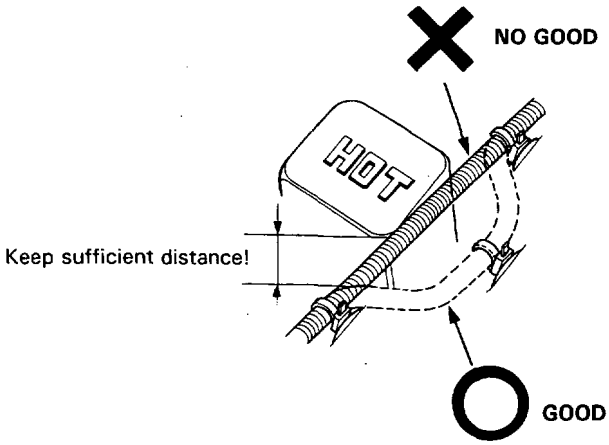

- Do not bring wire harnesses in direct contact with sharp edges or corners.
- Also avoid contact with the projected ends of bolts, screws and other fasteners.

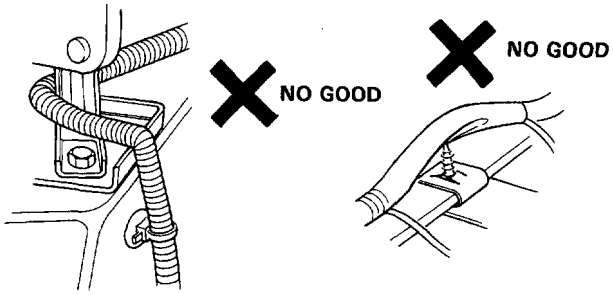

- Route harnesses so they are not pulled taut or slackened excessively.

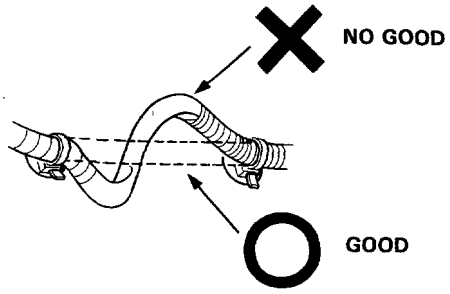

- Protect wires and harnesses with a tape or a tube if they are in contact with a sharp edge or corner.

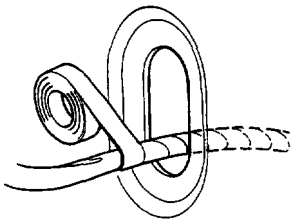

- Clean the attaching surface thoroughly if an adhesive is used. First, wipe with solvent or alcohol if necessary.

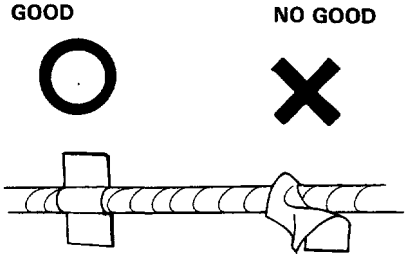

(cont'd)

Electrical (cont'd)

- Seat grommets in their grooves properly.

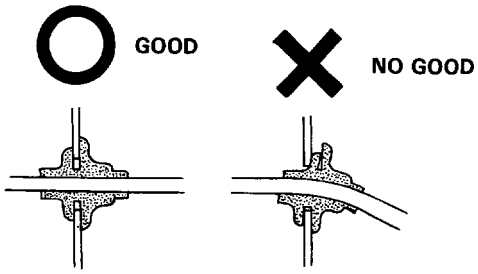

- Do not damage the insulation when connecting a wire.

- Do not use wires or harnesses with a broken insulation.
  Repair by wrapping with protective tape or replace with new ones if necessary.

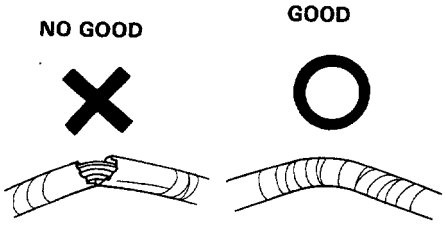

- After installing parts, make sure that wire harnesses are not pinched.

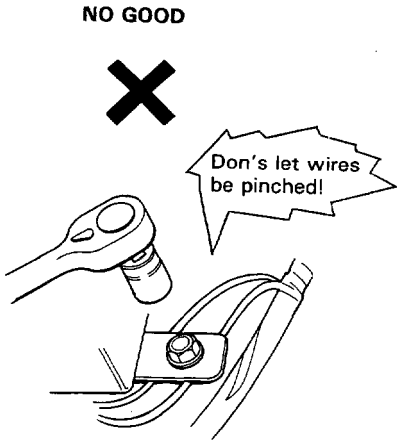

- After routing, check that the wire harnesses are not twisted or kinked.

- Wire harnesses should be routed so that they are not pulled taut, slackened excessively, pinched, or interfering with adjacent or surrounding parts in all steering positions.

- When using the Service Tester, follow the manufacturer's instructions and those described in the Shop Manual.

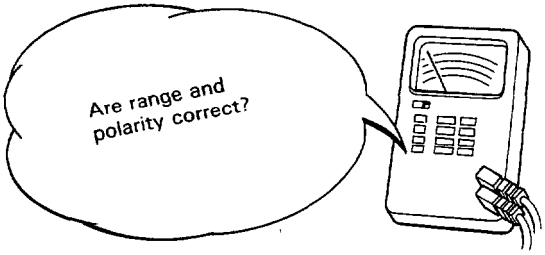

- Always insert the probe of the tester from the wire harness side (except waterproof connector).

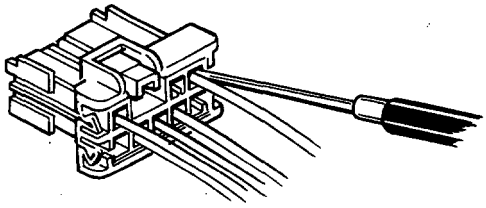

- Make sure to use the probe with a tapered tip.

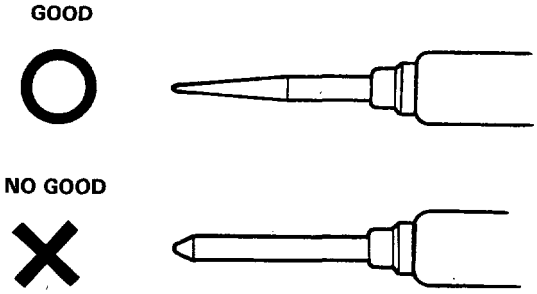

- Do not drop parts.

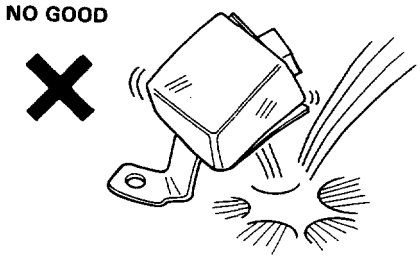

Symbol Marks

The following symbols stand for:

:Apply engine oil.

:Apply brake fluid.

:Apply grease.

:Apply Automatic Transmission Fluid.

:Apply Power Steering Fluid.

①, ②, ③,----- ❶, ❷, ❸,----- : Sequence of removal or installation.

Abbreviations

A/C	Air Conditioner
ALB	Anti Lock Brake
A/T	Automatic Transmission
ATF	Automatic Transmission Fluid
BAT	Battery
CATA	Catalytic Converter
EACV	Electronic Air Control Valve
ECU	Electronic Control Unit
EGR	Exhaust Gas Recirculation
EACV	Electronic Air Control Valve
EX	Exhaust
GND	Ground
IG	Ignition
IN	Intake
INT	Intermittent
L.	Left
LHD	Left Hand Drive
M/T	Manual Transmission
PCV VALVE	Positive Crankcase Ventilation Valve
PGM-FI	Programmed Fuel-Injection
P/S	Power Steering
R.	Right
RHD	Right Hand Drive
SOL. V	Solenoid Valve
SW	Switch
TA	Intake Air Temperature
TDC	Top Dead Center
TW	Coolant Temperature
P	Parking Position
R	Reverse Position
N	Neutral Position
D	Drive Position
S	Sport Position
2	Fixed at 2nd Range

Component Locations

* The figure shows LHD. KE model is symmterical to the figure.

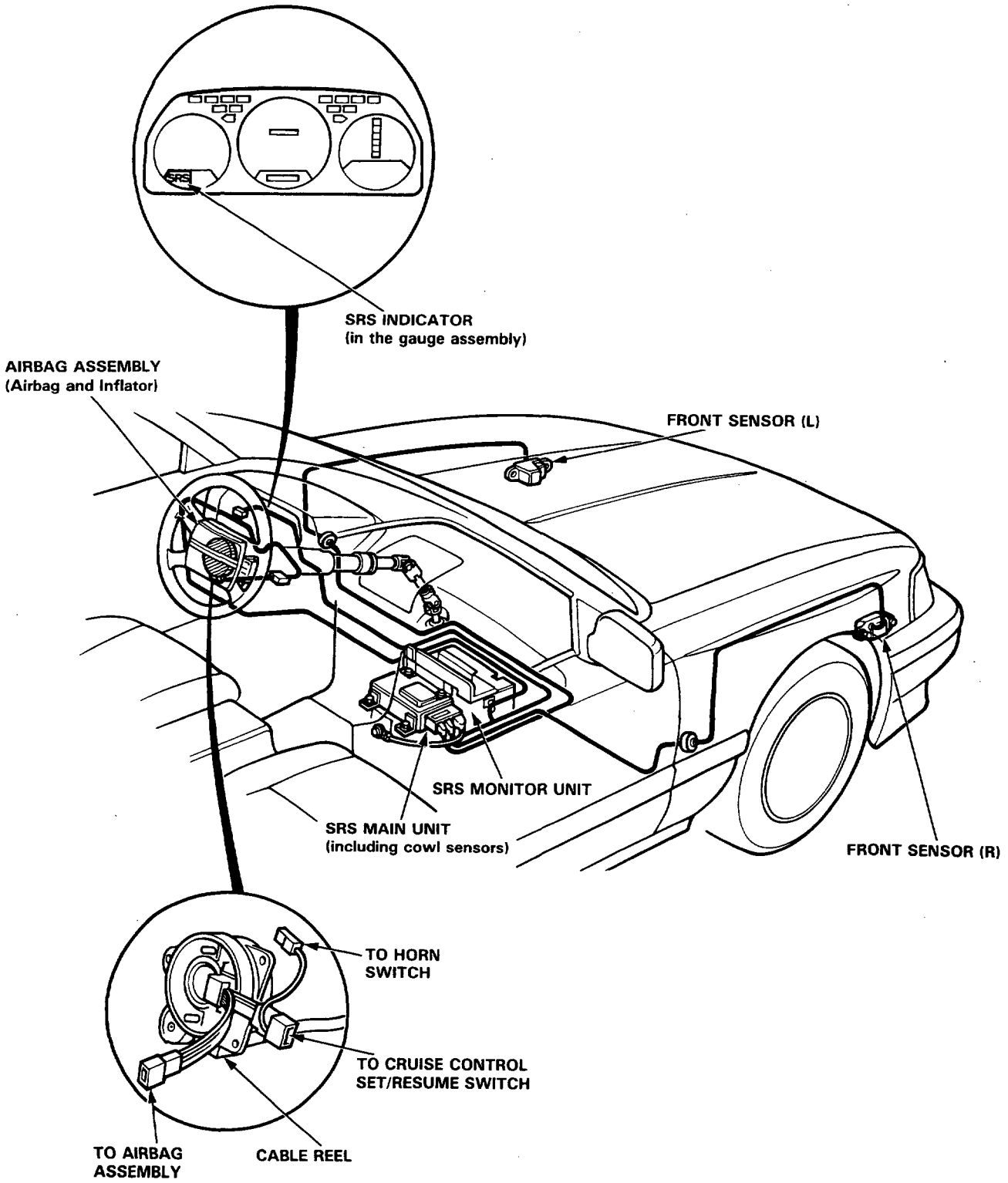

Description

The SRS is a safety device which, when used in conjunction with the seat belt, is designed to protect the driver by operating only when the car receives a frontal impact exceeding a certain set limit.
The system is composed of left and right front sensors, the SRS unit (which includes two cowl sensors), the cable reel and airbag assembly.

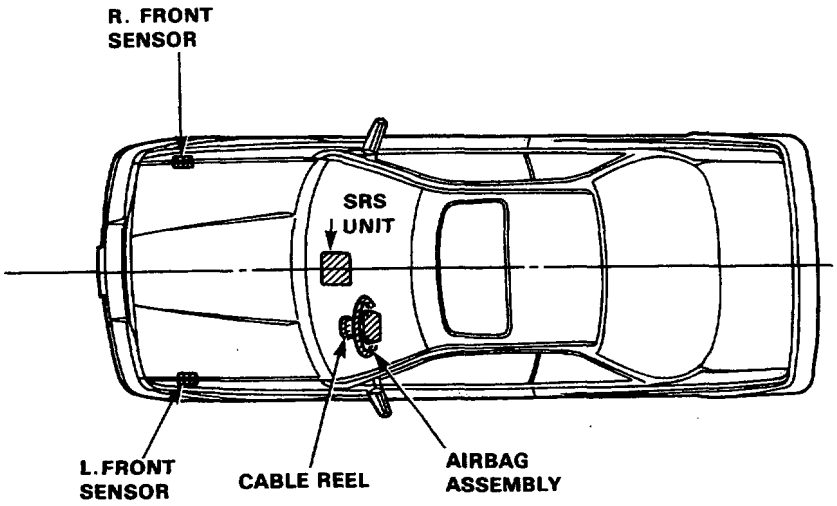

OPERATION:
As shown in the diagram below, cowl sensors (A) and (B) are connected in parallel, as are the left and right front sensors. The two parallel sets of sensors are connected in series by the airbag inflator circuit and the car battery.
In addition, a backup power unit is connected in parallel with the car battery. The backup power unit and the cowl sensors are located inside the SRS unit:

The SRS operational sequence is as follows:
(1) One or both cowl sensors activate, and one or both front sensors activate
(2) Electrical energy is supplied to the airbag inflator by the battery, or the backup power unit if the battery voltage is too low.
(3) Airbag deployment

At least one cowl and one front sensor must be activated simultaneously for at least 0.002 seconds in order for the airbag to be deployed.

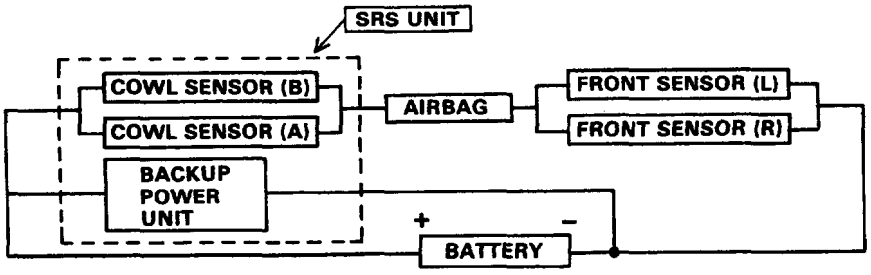

Self-diagnosis system
A self-diagnosis circuit is built into the SRS unit; when the ignition switch is turned ON, the SRS warning light comes on and goes out after about 8 seconds if the system is operating normally. If the light does not light, or does not go out after 8 seconds, or if it comes on while driving, this indicates an abnormality and the system must be inspected and repaired as soon as possible. Refer to Troubleshooting, see Section 16.

Warning/Caution Labels

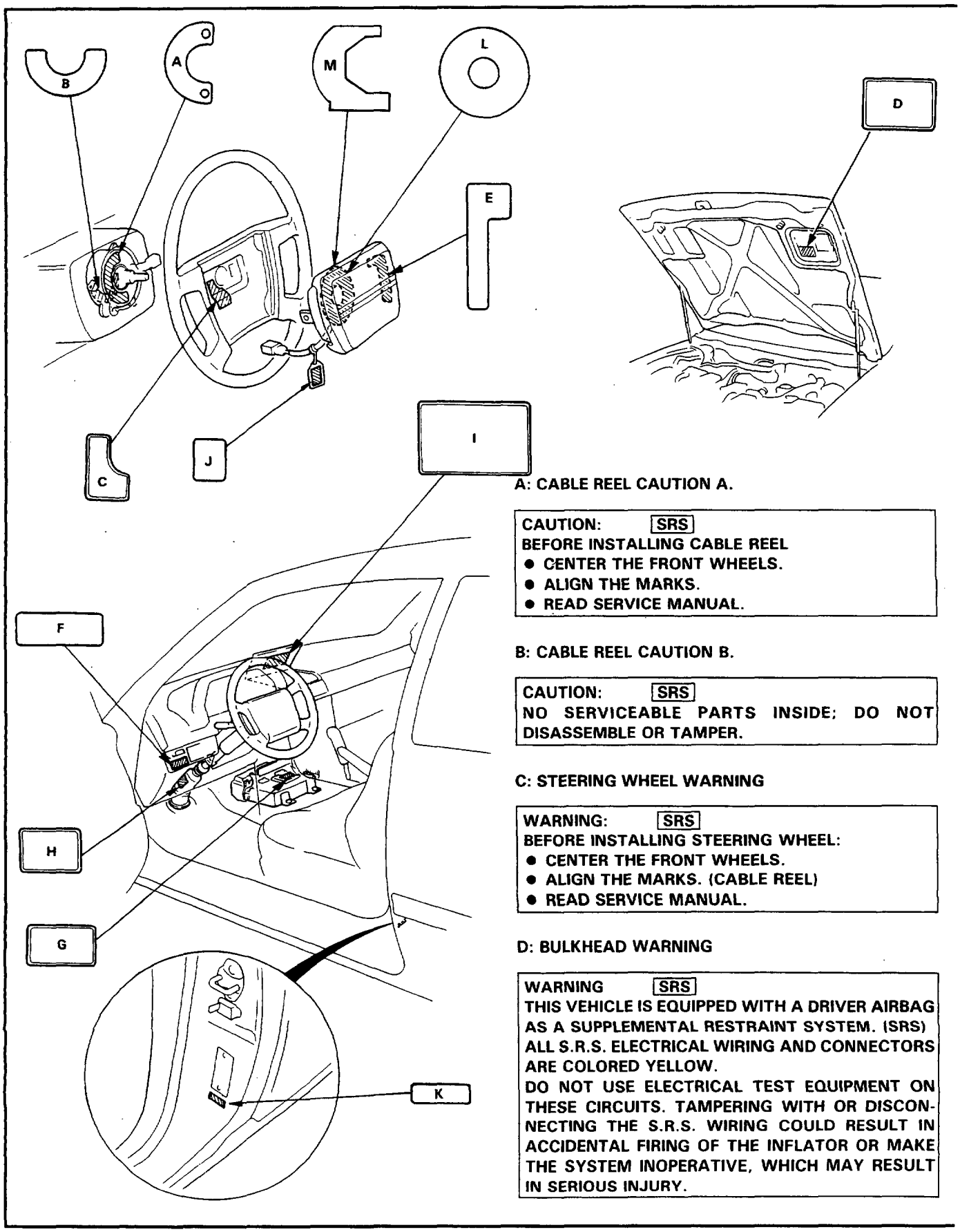

A: CABLE REEL CAUTION A.

CAUTION: SRS
BEFORE INSTALLING CABLE REEL
- CENTER THE FRONT WHEELS.
- ALIGN THE MARKS.
- READ SERVICE MANUAL.

B: CABLE REEL CAUTION B.

CAUTION: SRS
NO SERVICEABLE PARTS INSIDE; DO NOT DISASSEMBLE OR TAMPER.

C: STEERING WHEEL WARNING

WARNING: SRS
BEFORE INSTALLING STEERING WHEEL:
- CENTER THE FRONT WHEELS.
- ALIGN THE MARKS. (CABLE REEL)
- READ SERVICE MANUAL.

D: BULKHEAD WARNING

WARNING SRS
THIS VEHICLE IS EQUIPPED WITH A DRIVER AIRBAG AS A SUPPLEMENTAL RESTRAINT SYSTEM. (SRS)
ALL S.R.S. ELECTRICAL WIRING AND CONNECTORS ARE COLORED YELLOW.
DO NOT USE ELECTRICAL TEST EQUIPMENT ON THESE CIRCUITS. TAMPERING WITH OR DISCONNECTING THE S.R.S. WIRING COULD RESULT IN ACCIDENTAL FIRING OF THE INFLATOR OR MAKE THE SYSTEM INOPERATIVE, WHICH MAY RESULT IN SERIOUS INJURY.

E: MODULE WARNING

WARNING SRS
TO PREVENT ACCIDENTAL DEPLOYMENT AND POSSIBLE INJURY:
ALWAYS INSTALL THE PROTECTIVE SHORT CONNECTOR ON THE INFLATOR CONNECTOR WHEN THE HARNESS IS DISCONNECTED.
UNDER NO CIRCUMSTANCES SHOULD DIAGNOSIS BE PERFORMED USING ELECTRICAL TEST EQUIPMENT OR PROBING DEVICES.
NO SERVICEABLE PARTS INSIDE. DO NOT DISASSEMBLE OR TAMPER.
STORE THE REMOVED AIRBAG ASSEMBLY WITH THE PAD SURFACE UP.
FOR SPECIAL HANDING OR STORAGE REFER TO THE HONDA SERVICE MANUAL.
DISPOSE OF THE ENTIRE UNIT AS DIRECTED.

F: DRIVER INFORMATION

SRS ALWAYS WEAR YOUR SEAT BELT.
- THIS CAR IS EQUIPPED WITH A DRIVER AIRBAG AS A SUPPLEMENTAL RESTRAINT SYSTEM (S.R.S.).
- IT IS DESIGNED TO SUPPLEMENT THE SEAT BELT.

G: SRS UNIT CAUTION

CAUTION SRS
- **NO SERVICEABLE PARTS INSIDE.**
- **DO NOT DISASSEMBLE OR TAMPER.**
- **DO NOT DROP.**
- **STORE IN A CLEAN, DRY AREA.**

H: STEERING COLUMN CAUTION

CAUTION SRS
TO AVOID DAMAGING THE S.R.S. CABLE OR REEL, WHICH COULD MAKE THE SYSTEM INOPERATIVE, REMOVE THE STEERING WHEEL BEFORE REMOVING THE STEERING SHAFT CONNECTOR BOLT.

I: POCKET INFORMATION

DRIVER'S AIRBAG INFORMATION SRS
- SUPPLEMENTAL RESTRAINT SYSTEM (SRS) CAN PROVIDE ADDITIONAL PROTECTION FOR THE DRIVER IN A FRONTAL COLLISION. A FUNCTIONAL DESCRIPTION OF THE SRS IS IN YOUR OWNER'S MANUAL.
- THE SYSTEM MUST BE INSPECTED TEN YEARS AFTER DATE OF MANUFACTURE, AS NOTED ON THE CERTIFICATION PLATE.
- ANY REPAIR, INSPECTION OR NEARBY ACCESSORY INSTALLATION SHOULD BE DONE BY AN HONDA DEALER.
- IF YOUR SRS INDICATOR:
  - LIGHTS WHILE DRIVING OR FLASHES;
  FAILS TO LIGHT OR STAYS ON AFTER THE IGNITION IS FIRST TURNED ON:
  SEE YOUR AUTHORIZED HONDA DEALER.

J: STEERING WHEEL WARNING

WARNING SRS
TO PREVENT ACCIDENTAL DEPLOYMENT AND POSSIBLE INJURY:
ALWAYS INSTALL THE PROTECTIVE SHORT CONNECTOR ON THE INFLATOR CONNECTOR WHEN THE HARNESS IS DISCONNECTED.

K: LABEL AIRBAG

L: INFLATOR LABEL

DANGER POISON
KEEP OUT OF THE REACH OF CHILDREN
CONTAINS SODIUM AZIDE AND POTASSIUM NITRATE. CONTENTS ARE POISONOUS AND EXTREMELY FLAMMABLE. CONTACT WITH ACID, WATER, OR HEAVY METALS MAY PRODUCE HARMFUL AND IRRITATING GASES OR EXPLOSIVE COMPOUNDS. DO NOT DISMANTLE, INCINERATE OR BRING INTO CONTACT WITH ELECTRICITY OR STORE AT TEMPERATURES EXCEEDING 93°C (200°F).
FIRST AID: IF CONTENTS ARE SWALLOWED INDUCE VOMITING.
- FOR EYE CONTACT, FLUSH EYES WITH WATER FOR 15 MINUTES.
- IF GASES FROM ACID OR WATER CONTACT ARE INHALED, SEEK FRESH AIR. IN EVERY CASE, GET PROMPT MEDICAL ATTENTION.

M: INFLATOR COVER LABEL

DANGER SRS
EXPLOSIVE/FLAMMABLE
CONTACT WITH ACID, WATER, OR HEAVY METALS SUCH AS COPPER, LEAD, OR MERCURY, MAY PRODUCE HARMFUL AND IRRITATING GASES OR EXPLOSIVE COMPOUNDS. STORAGE TEMPERATURES MUST NOT EXCEED 93°C (200°F). FOR PROPER HANDLING, STORAGE, AND DISPOSAL PROCEDURES REFER TO THE HONDA SERVICE MANUAL.

POISON
CONTAINS POISONOUS SODIUM AZIDE AND POTASSIUM NITRATE.
FIRST AID:
IF CONTENTS ARE SWALLOWED, INDUCE VOMITING. FOR EYE CONTACT, FLUSH EYES WITH WATER FOR 15 MINUTES. IF GASES (FROM ACID OR WATER CONTACT) ARE INHALED, SEEK FRESH AIR. IN EVERY CASE, GET PROMPT MEDICAL ATTENTION.
KEEP OUT OF REACH OF CHILDREN.

Wiring Locations

CAUTION:
Make sure all SRS ground locations are clean and grounds are securely attached.

NOTE:
- All SRS electrical wiring harnesses are covered with yellow outer insulation.
- Replace the entire affected SRS harness assembly if there is an open circuit or damage to the wiring.

* The figure shows LHD. KE model is symmetrical to the figure.

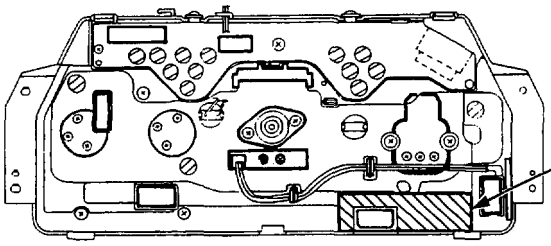

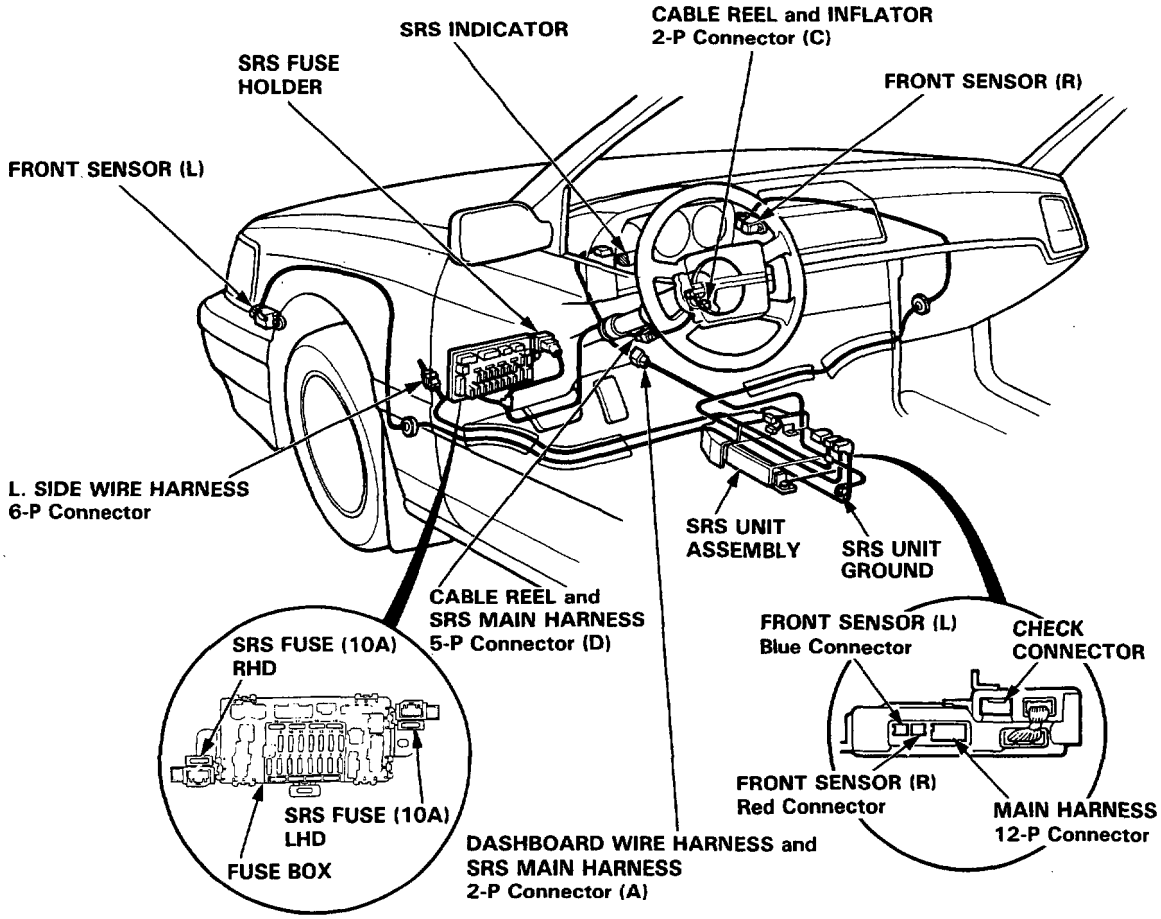

Precautions/Procedures

General Precautions

1. Carefully inspect any SRS part before installing.
   Do not install any part that shows signs of being dropped or improperly handled, such as dents, cracks or deformation:

   - Airbag assy.
   - Front sensors.
   - Cable reel.
   - SRS unit

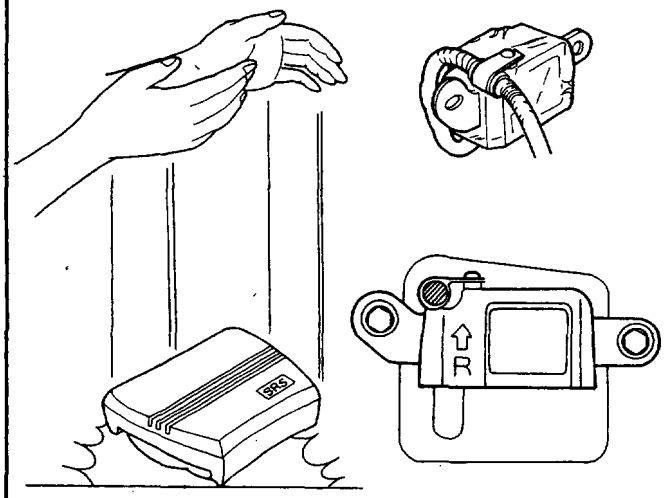

2. Use only the digital multimeter to check the system. If using an analog circuit tester, it may cause an accidental deployment and possible injury.
3. Do not install used SRS parts from another car.When repairing, use only new SRS parts.
4. Except when performing electrical inspections, always disconnect both the negative cable and positive cable at the battery before begining work.
5. Replacement of the lighting and wiper combination switches and cruise control switch can be done without removing the steering wheel:

   - Lighting and wiper combination switch replacement, see Section 16.
   - Cruise control switch replacement, see Section 16.

Airbag Assembly

Do not try to disassemble the airbag assembly. There are no separately serviceable parts. Once an airbag has been operated (deployed), it cannot be repaired or reused.

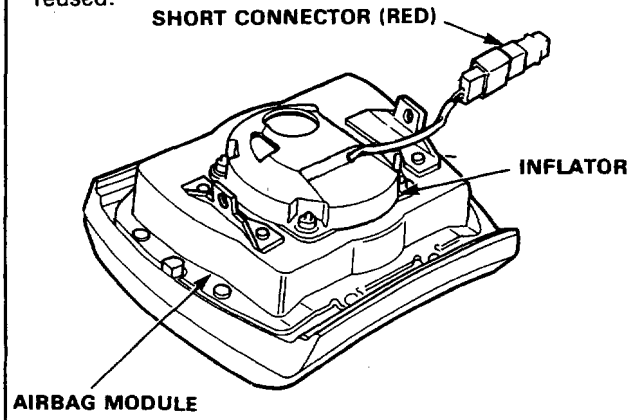

For temporary storage of the airbag assembly during service, please observe the following precautions:

1. Store the removed airbag assembly with the pad surface up.

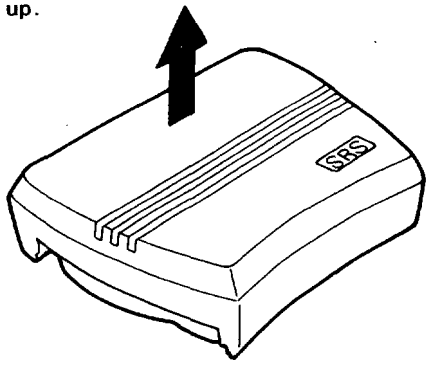

⚠WARNING If the airbag is improperly stored face down, accidental deployment could propel the unit with enough force to cause serious injury.

2. Store the removed airbag assembly on a secure flat surface away from any high heat source (exceeding 100°C/212°F) and free of any oil, grease, detergent or water.

   CAUTION: Improper hadling or storage can internally damage the airbag assembly, making it inoperative.
   If you suspect the airbag assembly has been damaged, install a new unit and refer to the Deployment/Disposal Procedures for scrapping of the damaged airbag.

Steering

1. Steering Wheel and Cable Reel Alignment :
   NOTE: To avoid misalignment of the steering wheel or airbag on reassembly, make sure the wheels are turned straight ahead before removing the steering wheel.

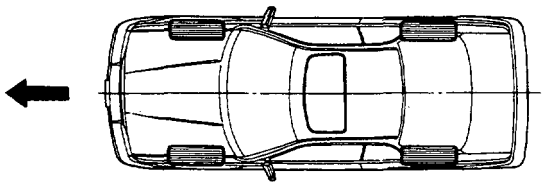

Rotate the cable reel clockwise until it stops.
Then rotate it counterclockwise (approximately two turns) until :

- The yellow gear tooth lines up with the mark on the cover.
- The arrow on the cable reel label points straight up.

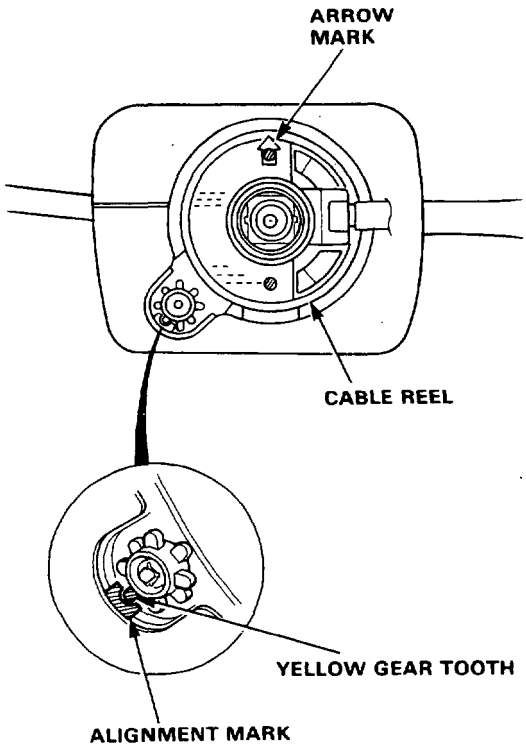

2. Steering Column Removal:

   CAUTION : Before removing the steering column, first disconnect the connector between the cable reel and the main SRS harness.

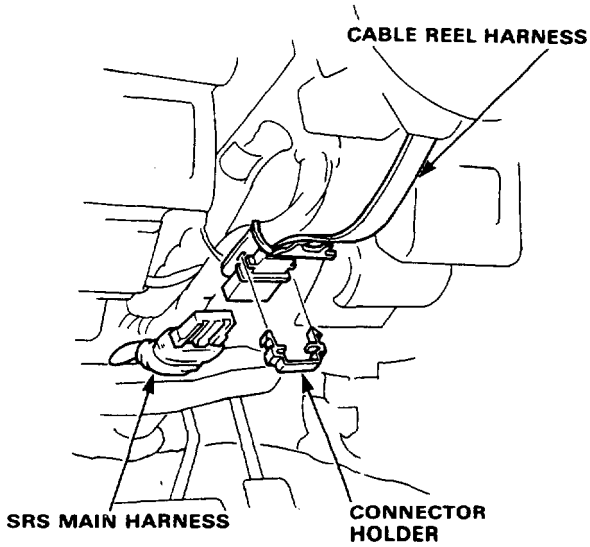

3. Steering wheel :
   Do not replace the original steering wheel with any other design, since it will make it impossible to properly install the airbag (Only use genuine HONDA replacement parts).

4. After reassembly confirm that the wheels are still straight ahead and that steering wheel spoke angle is correct. If minor spoke angle adjustment is necessary, do so only by adjustment of the tie rods, not by removing and repositioning the steering wheel.

Sensor Inspection

1. After any degree of front body damage, inspection both front sensors.
   Replace a sensor if there are any signs of dents, cracks or deformation.

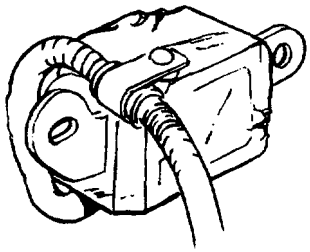

2. Be sure the sensors are installed securely.

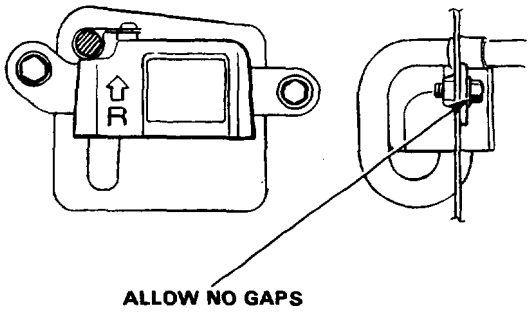

CAUTION:
Take extra care when painting or doing body work on any part of the front fender. Avoid direct exposure of the sensors or wiring to heat guns, welding or spraying equipment.

⚠WARNING
- **Disconnect both the negative and positive battery cables.**
- **Install the short connector before performing work on the front fenders or the SRS sensors.**

Wiring

1. Never attempt to modify, splice or repair SRS wiring.
   NOTE : SRS wiring can be identified by special yellow outer protective covering.

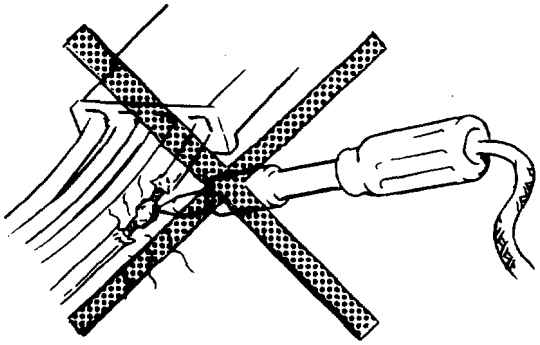

2. Be sure to install the harness wires so that they are not pinched or interfering with other car parts.

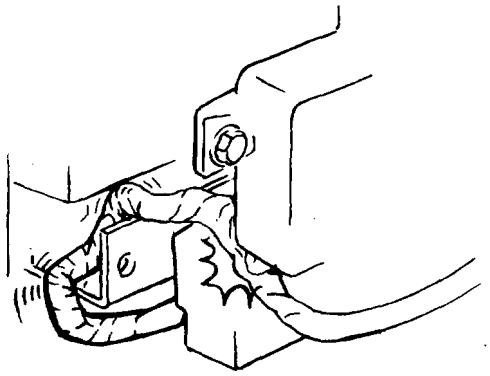

3. Make sure all SRS ground locations are clean and grounds are securely fastened for optimum metal-to-metal contact. Poor grounding can cause intermittent problems that are difficult to diagnose.

(cont'd)

Wiring (cont'd)

4. Installing Short Connector :

⚠WARNING To avoid accidental deployment and possible injury always install the protective short connector on the inflator connector when the harness is disconnected.

① Disconnect both the negative cable and positive cable from battery.
② Remove maintenance lid A below the airbag, then remove the red short connector.
③ Disconnect the connector between the airbag and cable reel.
④ Connect the short connector to the airbag side of the connector.
⑤ Reconnect both the positive cable and negative cable to battery.

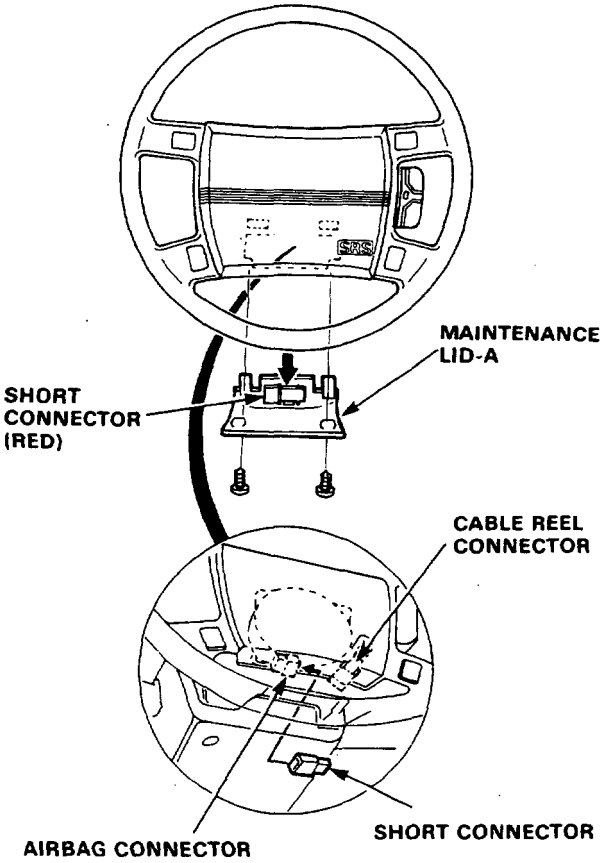

5. Disconnect the connectors at the SRS Unit and Fuse holder:

CAUTION: Avoid breaking the double-locked connectors on the SRS unit and fuse holder.

The connectors are double-locked; to remove them, first lift the connector lid with a thin screwdriver, then press the connector tab down and pull the connector out.
To reinstall a connector, push it into position until it clicks, then close the connector lid.

SRS Unit:

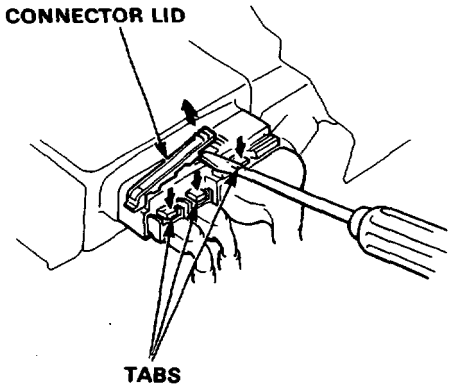

Fuse Holder:

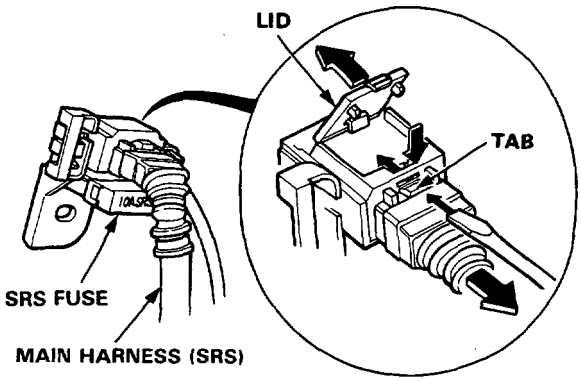

Special Tools

5. Engine

Number	Tool Number	Description	Q'ty	Remarks
①	07GAD–PH70200	Oil Seal Driver	1	
②	07GAF–PH60300	Piston Pin Base Insert	1	
③	07GAF–PH70100	Pilot Collar	1	
④	07HAF–PL20101	Piston Base Head	1	
⑤	07JAB–0010000	Crank Pulley Holder Set	1	For crankshaft pulley bolt.
⑤-1	07JAA–0010200	Socket Wrench, 19 mm	(1)	Component Tools For automatic transmission.
⑤-2	07JAB–0010100	Pulley Holder Attachment	(1)	
⑤-3	07JAB–0010200	Handle	(1)	
⑥	07JAB–0010300	Pulley Holder Attachment, Hex 45 mm	1	For manual transmission.
⑦	07JGG–0010100	Belt Tension Gauge	1	
⑧	07406–0030000	Oil Pressure Gauge Adaptor	1	
⑨	07743–0020000	Valve Guide Driver	1	
⑩	07746–0030100	Driver	1	
⑪	07749–0010000	Driver	1	07949–6110000 may also be used.
⑫	07757–0010000	Valve Spring Compressor	1	07957–3290001 may also be used.
⑬	07912–6110001	Oil Filter Socket	1	
⑭	07924–PD20003	Ring Gear Holder	1	
⑮	07925–6570000	Pulley Holder	1	Camshaft Pulley
⑯	07942–6110000	Valve Guide Driver/Remover	1	
⑰	07944–6110200	Pin Driver, 8.0 mm	1	
⑱	07947–SB00200	Oil Seal Driver	1	Crankshaft Oil Seal (Oil Pump)
⑲	07948–SB00101	Seal Driver Attachment	1	Crankshaft Oil Seal (Clutch side)
⑳	07966–6340011	Engine Block Hanger	1	
㉑	07973–6570002	Piston Pin Dis/Assembly Tool Set	1	
㉑-1	07973–6570500	Piston Base	(1)	Component Tools
㉑-2	07973–6570600	Piston Base Spring	(1)	

6. Fuel and Emission

Number	Tool Number	Description	Q'ty	Remarks
①	07GAC–SE00200	Fuel Sender Wrench	1	
②	07GAZ–SE00300	R.P.M. Connecting Adaptor	1	
③	07GMJ–ML80100	Test Harness	1	
④	07KAJ–PP80200	Test Harness	1	
⑤	07406–0040001	Fuel Pressure Gauge	1	
⑤-1	07406–0040100	Pressure Gauge	(1)	Component Tools
⑤-2	07406–0040201	Hose Assy	(1)	
⑥	07411–0020000	Digital Circuit Tester	1	
⑦	07999–PD6000A	PGM-FI Test Harness	1	

7. Clutch

Number	Tool Number	Description	Q'ty	Remarks
①	07GAG–PF50100	Clutch Disc Alignment Tool	1	
②	07924–PD20003	Ring Gear Holder	1	

8. Manual Transmission

Number	Tool Number	Description	Q'ty	Remarks
①	07GAD–PG20100	Pin Driver, 5.0 mm	1	
②	07GAD–PG40100	Oil Seal Driver	1	
③	07GAJ–PG20101	Mainshaft Thrust Clearance Inspection Tool	1	
④	07GAJ–PG20200	Preload Inspection Tool	1	
⑤	07744–0010400	Pin Driver, 5.0 mm	1	07944–6110100 may also be used.
⑥	07746–0010300	Attachment, 42 x 47 mm	1	
⑦	07746–0010500	Attachment, 62 x 68 mm	1	07947–6340200 may also be used.
⑧	07746–0030100	Driver	1	
⑨	07749–0010000	Driver	1	07949–6110000 may also be used.
⑩	07936–6340000	Bearing Remover Set	1	
⑪	07936–6890101	Bearing Puller Attachment	1	Use changed to 07936–6340000 attachment.
⑫	07979–PJ40000	Mainshaft Stand Base	1	

9. Automatic Transmission

Number	Tool Number	Description	Q'ty	Remarks
①	07GAB–PF50100	Mainshaft Holder	1	
②	07GAC–PF40210	Bearing Remover Attachment	1	Use changed to 07936–6340000 attachment.
③	07GAC–PG40101	Housing Puller	1	07HAC–PK40100 may also be used.
④	07GAD–PG20100	Pin Driver, 5.0 mm	1	
⑤	07GAD–PG40100	Oil Seal Driver	1	
⑥	07GAE–PG40001	Clutch Spring Compressor Set	1	
⑦	07GAE–PG40200	Compressor Bolt Assembly	1	
⑧	07HAE–PL50100	Compressor Attachment	1	
⑨	07HAF–PL50100	Gear Installer	1	
⑩	07406–0020003	Oil Pressure Gauge Set	1	
⑪	07406–0020201	Oil Pressure Gauge Hose	(3)	Component Tool
⑪-1	07746–0010500	Attachment, 62 x 68 mm	1	
⑫	07746–0030100	Driver	1	
⑬	07749–0010000	Driver	1	07949–6110000 may also be used.
⑭	07936–6340000	Bearing/Transmission Case Puller	1	
⑮	07947–6340201	Driver Attachment, E	1	
⑯	07947–6340500	Driver Attachment, E	1	
⑰	07960–6120100	Compressor Attachment	1	

10. Driveshafts

Number	Tool Number	Description	Q'ty	Remarks
①	07746–0010400	Attachment, 52 x 55 mm	1	
②	07746–0010500	Attachment, 62 x 68 mm	1	
③	07746–0040900	Pilot, 40 mm	1	
④	07749–0010000	Driver	1	
⑤	07947–SD90200	Oil Seal Driver	1	
⑥	07947–6340201	Attachment	1	
⑦	07965–SD90100	Support Base	1	
⑧	07965–SD90200	Support Collar	1	

Special Tools

11. Power Steering

Number	Tool Number	Description	Q'ty	Remarks
①	07GAG–SD40000	P/S Tool Kit	1	
①-1	07GAG–SD40100	Piston Seal Ring Guide	(1)	Component Tools
①-2	07GAG–SD40200	Piston Seal Sizing Tool	(1)	
①-3	07GAG–SD40300	Cylinder End Seal Slider	(1)	
①-4	07GAG–SD40400	End Seal Guide	(1)	
①-5	07GAG–SD40600	P/S Tool Kit Case	(1)	
②	07GAK–SE00100	P/S Joint Adaptor Kit	1	
②-1	07GAK–SE00110	P/S Joint Adaptor (Pump)	(1)	Component Tools
②-2	07GAK–SE00120	P/S Joint Adaptor (Hose)	(1)	
③	07JGG–0010100	Belt Tension Gauge	1	
④	07HAJ–SD40400	Deployment Tool	1	
⑤	07KAA–SD40100	Locknut Wrench, 40 mm	1	
⑥	07406–0010101	Bypass Tube Joint	1	
⑦	07406–0010200	P/S Pressure Gauge Assembly	1	
⑦-1	07406–0010300	Pressure Control Valve	(1)	Component Tools
⑦-2	07406–0010400	Pressure Gauge	(1)	
⑧	07725–0030000	Universal Holder	1	07725–0010101 may also be used.
⑨	07746–0010300	Attachment, 42 x 47 mm	1	
⑩	07749–0010000	Driver	1	07949–6110000 may also be used.
⑪	07941–6920003	Ball Joint Remover	1	
⑫	07944–6110200	Pin Driver, 8 mm	1	07941–6920002 may also be used.
⑬	07947–6340300	Driver Attachment	1	
⑭	07953–7190000	Collar Driver	1	
⑮	07974–SA50600	Pinion Seal Guide	1	
⑯	07974–SA50800	Ball Joint Boot Clip Installation Guide	1	

12. Suspension

Number	Tool Number	Description	Q'ty	Remarks
①	07GAC–SE00100	Ball Joint Remover	1	
②	07GAE–SE00101	Shock Absorber Spring Compressor	1	07GAE–SE00100 may also be used.
③	07GAF–SE00401	Front Hub Base	1	
④	07GAF–SD40100	Hub Assembly Pin	1	
⑤	07GAF–SD40200	Hub Assembly Driver Attachment	1	
⑥	07GAF–SD40300	Ball Joint Disassembly Tool Kit	1	
⑥-1	07GAF–SD40310	Ball Joint Remover Base	(1)	Component Tools
⑥-2	07GAF–SD40320	Ball Joint Installer Base	(1)	
⑥-3	07GAF–SD40330	Ball Joint Remover/Installer	(1)	
⑦	07GAF–SD40700	Hub Dis/Assembly Base	1	
⑧	07GAG–SD40700	Ball Joint Boot Clip Installation Guide	1	
⑨	07HAD–SG00100	Bearing Driver Attachment	1	
⑩	07HGK–0010200	Wheel Alignment Gauge Attachment	1	
⑪	07746–0010500	Attachment, 62 x 68 mm	2	When servicing rear axle, 2 tools are required.
⑫	07749–0010000	Driver	1	07949–6110000 may also be used.
⑬	07941–6920003	Ball Joint Remover	1	07941–6920002 may also be used.
⑭	07965–6920201	Hub Dis/Assembly Tool B	1	
⑮	07974–SA50800	Ball Joint Boot Clip Installation Guide B	1	

13. Brakes

Number	Tool Number	Description	Q'ty	Remarks
①	07GAJ–SD40100	Brake Booster Rod Adjustment Gauge	1	
②	07HAE–SG00100	Brake Spring Compressor	1	
③	07HAJ–SG00300	ALB Checker Adaptor	1	
④	07HAK–SG00110	Pressure Gauge Joint Pipe	2	
④-1	07510–6340100	Pressure Gauge Joint Pipe	(1)	ø10 mm ┐ Component Tools
④-2	07HAK–SG00100	Pressure Gauge Joint Pipe	(1)	ø12 mm ┘
⑤	07404–5790300	Vacuum Gauge	1	
⑥	07406–5790200	Pressure Gauge	2	
⑦	07410–5790100	Pressure Gauge Attachment	2	
⑧	07410–5790500	Tube Joint Adapter	1	
⑨	07508–SB00000	ALB Checker	1	
⑩	07510–6340300	Vacuum Joint Tube, A	1	
⑪	07907–SB00000	ALB T-Wrench	1	
⑫	07914–SA50001	Snap Ring Pliers	1	
⑬	07921–0010100	Flare Nut Wrench	1	

14. Electrical

Number	Tool Number	Description	Q'ty	Remarks
①	07GAZ–SE30100	Torsion Rod Assembly Tool	1	

15. Heater and Air Conditioner

Number	Tool Number	Description	Q'ty	Remarks
①	07JGG–0010100	Belt Tension Gauge	1	
②	07933–6920001	A/C Clutch Remover	1	

16. Electrical

Number	Tool Number	Description	Q'ty	Remarks
①	07GAC–SE00200	Fuel Sender Wrench	1	
②	07HAZ–SG00100	SRS Test Harness A	1	
③	07HAZ–SG00200	SRS Test Harness B	1	
④	07HAZ–SG00300	SRS Test Harness C	1	
⑤	07JGG–0010100	Belt Tension Gauge	1	

Standards and Service Limits

5. Engine/Cylinder Head, Valve Train

	MEASUREMENT		STANDARD (NEW)	SERVICE LIMIT
Compression	200 min^{-1} (rpm) and wide-open throttle		Nominal: 1,177 kPa (12.0 kg/cm², 171 psi) Minimum: 981 kPa (10.0 kg/cm², 142 psi) Maximum variation: 196 kPa (2 kg/cm², 28 psi)	
Cylinder head	Warpage		—	0.05 (0.002)
	Height		133 (5.24)	132.8 (5.23)
Camshaft	End play		0.05–0.15 (0.002–0.006)	0.5 (0.02)
	Oil clearance		0.045–0.081 (0.0018–0.0032)	0.10 (0.004)
	Runout		0.015 (0.0006)	0.03 (0.001)
	Cam lobe height	IN	39.460 (1.5535)	—
		EX	39.409 (1.5515)	—
Valve	Valve clearance	IN	0	—
		EX	0	—
	Valve stem O.D.	IN	6.58–6.59 (0.2591–0.2594)	6.55 (0.258)
		EX	6.55–6.56 (0.2579–0.2583)	6.52 (0.257)
	Stem-to-guide clearance	IN	0.02–0.05 (0.001–0.002)	0.08 (0.003)
		EX	0.05–0.08 (0.002–0.003)	0.11 (0.004)
	Stem installed height	IN	50.00 (1.969)	50.35 (1.982)
		EX	47.50 (1.870)	47.85 (1.884)
Valve seat	Width	IN and EX	1.25–1.55 (0.049–0.061)	2.0 (0.08)
Valve spring	Free length	IN	53.90 (2.12)	52.90 (2.08)
		EX Inner	44.95 (1.77)	43.95 (1.73)
		Outer	49.55 (1.95)	48.55 (1.91)
	Squareness	IN	—	1.89 (0.072)
		EX Inner	—	1.57 (0.062)
		Outer	—	1.73 (0.068)
Valve guide	I.D.	IN and EX	6.61–6.63 (0.260–0.261)	6.65 (0.262)
Rocker arm	Arm-to-shaft clearance		0.018–0.054 (0.0007–0.0021)	0.08 (0.003)
Push rod	Runout		—	0.02 (0.0008)
Hydraulic tappet	Compression stroke		0.01–0.08 (0.0003–0.0031)	—

5. Engine/Engine Block

	MEASUREMENT		STANDARD (NEW)	SERVICE LIMIT
Cylinder block	Warpage of deck surface		0.07 (0.003) max.	0.10 (0.004)
	Bore diameter	A	87.00–87.02 (3.4252–3.4259)	87.07 (3.4279)
	Bore taper		—	0.05 (0.002)
	Reboring limit		—	0.5 (0.02)
Piston	Skirt O.D. (At 18 mm (0.71 in) from bottom of skirt)	A	86.981–86.994 (3.4244–3.4250)	86.97 (3.4240)
		B	86.971–86.984 (3.4240–3.4246)	86.96 (3.4236)
	Clearance in cylinder		0.016–0.039 (0.0006–0.0015)	0.08 (0.003)
	Piston-to-ring clearance (top and second)		0.015–0.045 (0.0006–0.0018)	0.13 (0.005)
Piston ring	Ring end gap Top		0.20–0.35 (0.008–0.014)	0.6 (0.02)
	Second		0.35–0.50 (0.014–0.019)	0.75 (0.03)
	Oil		0.20–0.70 (0.008–0.028)	0.8 (0.03)
Connecting rod	Pin-to-rod interference		0.013–0.032 (0.0005–0.0013)	—
	Large end bore diameter		Nominal 55 (2.17)	—
	End play installed on crankshaft		0.15–0.30 (0.006–0.012)	0.40 (0.016)
Crankshaft	Main journal diameter		63.976–64.000 (2.5187–2.5197)	—
	Taper/out-of-round, main journal		0.005 (0.0002) max.	0.010 (0.0004)
	Rod journal diameter		51.976–52.000 (2.0463–2.0472)	—
	Taper/out-of-round, rod journal		0.005 (0.0002) max.	0.010 (0.0004)
	End play		0.10–0.35 (0.004–0.014)	0.45 (0.018)
	Runout		0.01 (0.0004) max.	0.015 (0.0006)
Bearings	Main bearing-to-journal oil clearance		0.024–0.048 (0.0009–0.0019)	0.05 (0.002)
	Rod bearing-to-journal oil clearance		0.026–0.050 (0.0010–0.002)	0.05 (0.002)

Unit: mm (in.)

5. Engine/Engine Lubrication

	MEASUREMENT		STANDARD (NEW)	SERVICE LIMIT
Engine oil	Capacity ℓ (U.S. qt., Imp. qt.)		5.7 (6.0, 5.0) After engine disassembly 4.5 (4.8, 4.0) After oil change, including oil filter	
Oil pump	Displacement		55.9 ℓ (14.8 U.S. gal., 12.3 Imp. gal.) 5,000 min^{-1} (rpm)	
	Inner-to-outer rotor radial clearance Pump body-to-rotor radial clearance Pump body-to-rotor side clearance		0.04–0.18 (0.002–0.007) 0.10–0.18 (0.004–0.007) 0.02–0.07 (0.001–0.003)	0.2 (0.008) 0.2 (0.008) 0.12 (0.005)
Relief valve	Pressure setting 80°C (176°F)	At Idle	137 kPa (1.4 kg/cm², 20 psi) min.	
		At 3,000 min^{-1} (rpm)	490–569 kPa (5.0–5.8 kg/cm², 71–82 psi)	

5. Engine/Cooling

	MEASUREMENT	STANDARD (NEW)	
Radiator	Capacity (Includes heater) ℓ (U.S. qt., Imp. qt.) (Includes reservoir 0.7 (0.74, 0.61))	M/T: 7.5 (7.9, 6.6) A/T: 7.4 (7.8, 6.5)	
	Pressure cap opening pressure	88–118 kPa (0.9–1.20 kg/cm², 14–17 psi)	
Thermostat	Starts to open Full open Valve lift at full open	78 ± 2°C (172 ± 36°F) 91°C (196°F) 8 (0.31) min.	86–90°C (187–194°F)
Water pump	Gear ratio (crankshaft) Capacity: ℓ per min/at min^{-1} (rpm)	1.044 150/6,000 (39.6 U.S. gal, 33 Imp. gal./6,000 min^{-1} (rpm))	
Cooling fan	Fan-to-core clearance Thermoswitch "ON" temperature (Low) Thermoswitch "OFF" temperature (Low) Thermoswitch "ON" temperature (High) Thermoswitch "OFF" temperature (High)	7.5 (0.29) 81–87°C (179–189°F) Subtract 6 ± 2°C (43 ± 36°F) from the actual "ON" temperature (LOW). 87–93°C (188–199°F) Subtract 6 ± 2°C (43 ± 36°F) from the actual " ON" temperature (HIGH).	

6. Fuel and Emissions

	MEASUREMENT		STANDARD (NEW)
Fuel pump	Delivery pressure Displacement		250 kPa (2.55 kg/cm², 36 psi) 230 cm³ (cc)/min in 10 seconds
	Relief valve opening pressure		441–588 kPa (4.5–6.0 kg/cm², 64–85 psi)
Pressure regulator	Pressure		245–255 kPa (2.5–2.6 kg/cm², 35–37 psi)
Fuel Tank	Capacity		68 ℓ (18.0 U.S. gal., 15.0 Imp. gal.)
Engine	Fast idle		1,100–1,900 min^{-1} (rpm)
	Idle speed	with headlights and cooling fan off	Manual 680 ± 50 min^{-1} (rpm) with cata, 720 ± 50 min^{-1} (rpm) without cata Automatic 680 ± 50 min^{-1} (rpm) ("N" and "D" position) 720 ± 50 min^{-1} (rpm) ("N" or "P" position) without cata 680 ± 50 min^{-1} (rpm) ("D" position) without cata
	Idle CO		0.1 % with cata, 2.0 % max without cata

7. Clutch

	MEASUREMENT	STANDARD (NEW)	SERVICE LIMIT
Clutch pedal	Pedal height Stroke Pedal play Disengagement height	153 (6.0) to carpet 145–150 (5.7–5.9) 9–15 (0.4–0.6) 90 (3.5) min. to floor	— — — —
Flywheel	Clutch surface runout I.D. of pilot bush	0.05 (0.002) max. 19.000–19.071 (0.7480–0.7508)	0.15 (0.006) —
Clutch plate	Rivet head depth Surface runout Radial play in splines Thickness	1.3 (0.05) min. 0.8 (0.03) max. 0.7–2.1 (0.028–0.083) 8.5–9.2 (0.33–0.36)	0.2 (0.008) 1.0 (0.04) 4.0 (0.16) 6.1 (0.24)
Clutch release bearing holder	I.D. Holder-to-guide sleeve clearance	35.00–35.059 (1.378–1.380) 0.05–0.15 (0.002–0.006)	35.09 (1.381) 0.22 (0.009)
Clutch cover	Uneveness of diaphragm spring	0.6 (0.02) max.	0.8 (0.03)

(cont'd)

Standards and Service Limits

8. Manual Transmission

	MEASUREMENT	STANDARD (NEW)	SERVICE LIMIT
Transmission oil	Capacity ℓ (U.S. qt., Imp. qt.)	2.3 (2.4, 2.0) at assembly 2.2 (2.3, 1.9) at oil change	
Mainshaft	End play Diameter of ball bearing contact area Diameter of third gear contact area Diameter of ball bearing contact area Diameter of pilot bush contact area Runout	0.14–0.21 (0.006–0.083) 27.977–27.990 (11.015–11.020) 37.984–38.000 (1.4954–1.4961) 27.987–28.000 (1.1018–1.1024) 18.80–18.85 (0.7402–0.7421) 0.02 (0.0008) max.	Adjust with a shim. 29.930 (1.1783) 37.930 (1.4933) 27.940 (1.1000) — 0.05 (0.002)
Mainshaft third and fourth gears	I.D. End play Thickness 3rd gear 4th gear	43.009–43.025 (1.6933–1.6939) 0.06–0.21 (0.0024–0.0083) 35.42–35.47 (1.3945–1.3965) 33.45–33.47 (1.3169–1.3177)	43.080 (1.6961) 0.30 (0.012) 35.30 (1.3898) 33.33 (1.3122)
Mainshaft fifth gear	I.D. End play Thickness	43.009–43.025 (1.6933–1.6939) 0.06–0.21 (0.0024–0.0083) 31.92–31.97 (1.2567–1.2587)	43.080 (1.6961) 0.30 (0.012) 31.80 (1.2520)
Countershaft	End play Diameter of needle bearing contact area Diameter of ball bearing needle bearing contact area Diameter of low gear contact area Runout	0.10–0.35 (0.004–0.014) 33.000–33.015 (1.2992–1.2998) 24.987–25.000 (0.9837–0.9845) 39.984–40.000 (1.5742–1.5748) 0.02 (0.0008) max.	0.50 (0.02) 32.95 (1.297) 24.94 (0.982) 39.93 (1.572) 0.05 (0.002)
Countershaft low gear	I.D. End play	46.009–46.025 (1.8114–1.8120) 0.03–0.08 (0.0012–0.0031)	46.08 (1.923) Adjust with a shim.
Countershaft second gear	I.D. End play Thickness	50.009–50.025 (1.9689–1.9695) 0.03–0.10 (0.0012–0.0039) 32.92–32.97 (1.2961–1.2980)	50.08 (1.972) Adjust with a collar. 32.8 (1.2913)
Spacer collar (Countershaft second gear)	I.D. O.D. Length A B	36.48–36.49 (1.4362–1.4366) 43.984–44.000 (1.7317–1.7323) 28.98–29.00 (1.1409–1.1417) 29.03–29.05 (1.1429–1.1437)	36.50 (1.437) 43.94 (1.730) — —
Spacer collar (Mainshaft fourth and fifth gears)	I.D. O.D. Length A B	31.002–31.012 (1.2205–1.2209) 37.989–38.000 (1.4956–1.4961) 55.95–56.05 (2.2028–2.2067) 26.03–26.08 (1.0248–1.0268)	31.06 (1.223) 37.94 (1.494) — —
Reverse idler gear	I.D. Gear-to-reverse gear shaft clearance	20.020–20.041 (0.7882–0.7890) 0.020–0.054 (0.0008–0.0021)	20.09 (0.7909) 0.160 (0.0006)
Synchronizer ring	Ring-to-gear clearance (ring pushed against gear)	0.85–1.10 (0.0335–0.0433)	0.40 (0.016)
Shift fork	Synchronizer sleeve gear Low and 2nd gears 3rd and 4th gears 5th gear Fork-to-synchronizer sleeve clearance	8.90–9.00 (0.3504–0.3543) 8.40–8.50 (0.3307–0.3346) 5.40–5.50 (0.2126–0.2165) 0.45–0.65 (0.018–0.026)	— — — 1.0 (0.039)
Reverse shift fork	End gap Fork-to-reverse idler gear clearance Groove width Fork-to-fifth/reverse shift shaft clearance	13.0–13.3 (0.5118–0.5236) 0.5–1.1 (0.018–0.043) 7.05–7.25 (0.2776–0.2854) 0.05–0.35 (0.002–0.014)	— 1.8 (0.071) — 0.5 (0.02)
Shift arm	Width of groove in shift rod guide Shift arm-to-shift rod guide clearance Width in shift guide Shift arm-to-shift guide clearance	8.1–8.2 (0.319–0.323) 0.2–0.3 (0.008–0.012) 13.05–13.25 (0.514–0.522) 0.05–0.35 (0.002–0.014)	— 0.55 (0.022) — 0.6 (0.02)
Interlock	O.D. Interlock-to-change piece clearance	12.05–12.15 (0.4744–0.4783) 0.05–0.25 (0.002–0.010)	— 0.5 (0.02)
Ring gear	Backlash	0.085–0.142 (0.0033–0.0056)	0.2 (0.0079)
Differential carrier	Pinion shaft bore diameter Carrier-to-pinion shaft clearance Driveshaft bore diameter Carrier-to-driveshaft clearance	18.000–18.018 (0.7087–0.7094) 0.016–0.052 (0.0006–0.0020) 30.000–30.021 (1.1811–1.1819) 0.025–0.066 (0.0010–0.0026)	— 0.1 (0.004) — 0.12 (0.005)
Differential pinion gear	Backlash Pinion gear bore diameter Pinion gear-to-pinion shaft clearance	0.08–0.15 (0.003–0.006) 18.043–18.061 (0.7104–0.7111) 0.057–0.095 (0.0022–0.0037)	Adjust with a washer. — 0.15 (0.006)
Differential taper roller bearing	Preload N•m (kg-m, lb-ft)	1.4–2.0 (0.14–0.20, 1.0–1.4)	Adjust with a washer.

9. Automatic Transmission

Unit: mm (in.)

	MEASUREMENT		STANDARD (NEW)	SERVICE LIMIT
Transmission oil	Capacity ℓ (U.S. qt., Imp. qt.)		3.2 (3.4, 2.8) at oil change 6.5 (6.9, 5.7) at assembly	
Hydraulic pressure	Line pressure at 2,000 min^{-1} (rpm)		814–863 kPa (8.3–8.8 kg/cm², 118–125 psi)	765 kPa (7.8 kg/cm², 111 psi)
	4th, 3rd, 2nd clutch pressure at 2,000 min^{-1} (rpm)		490–863 kPa (5.0–8.8 kg/cm², 71–125 psi)	441 kPa (4.5 kg/cm², 64 psi) with lever released 765 kPa (7.8 kg/cm², 111 psi) with throttle more than 3/8 OPEN
	1st clutch pressure at 2,000 min^{-1} (rpm)		814–863 kPa (8.3–8.8 kg/cm², 118–125 psi)	765 kPa (7.8 kg/cm², 111 psi)
	Throttle pressure B	Full closed	0	—
		Full open	814–863 kPa (8.3–8.8 kg/cm², 118–125 psi)	765 kPa (7.8 kg/cm², 111 psi)
	Modulator pressure		520–559 kPa (5.3–5.7 kg/cm², 75–81 psi)	490 kPa (5.0 kg/cm², 71 psi)
Stall speed	Check with car on level ground		2,150–2,450 min^{-1} (rpm)	—
Clutch	Clutch initial clearance	1st	0.65–0.85 (0.026–0.034)	—
		2nd, 3rd	0.5–0.7 (0.020–0.028)	—
		4th	0.4–0.6 (0.016–0.024)	—
	Clutch return spring free length		31.0 (1.22)	29.0 (1.14)
	Clutch disc thickness		1.88–2.0 (0.074–0.079)	Until grooves worn out
	Clutch plate thickness		1.95–2.05 (0.077–0.079)	Discoloration
	Clutch end plate thickness	Mark 1	2.05–2.10 (0.081–0.083)	↑
		Mark 2	2.15–2.20 (0.085–0.087)	
		Mark 3	2.25–2.30 (0.089–0.091)	
		Mark 4	2.35–2.40 (0.093–0.094)	
		Mark 5	2.45–2.50 (0.096–0.098)	
		Mark 6	2.55–2.60 (0.100–0.102)	
		Mark 7	2.65–2.70 (0.104–0.106)	
		Mark 8	2.75–2.80 (0.108–0.110)	
		Mark 9	2.85–2.90 (0.112–0.114)	
		Mark 10	2.95–3.00 (0.116–0.118)	
		Mark 11*	3.05–3.10 (0.120–0.122)	
		Mark 12*	3.15–3.20 (0.124–0.126)	
		Mark 13*	3.25–3.30 (0.128–0.130)	
		Mark 14*	3.35–3.40 (0.132–0.134)	Discoloration
Transmission	Diameter of needle bearing contact area on main and stator shaft		22.980–22.993 (0.9047–0.9052)	Wear or damage
	Diameter of needle bearing contact area on mainshaft 2nd gear		35.975–35.991 (1.4163–1.4169)	↑
	Diameter of needle bearing contact area on mainshaft 4th gear collar		31.975–31.991 (1.2588–1.2594)	
	Diameter of needle bearing contact area on mainshaft 1st gear collar		30.975–30.991 (1.2195–1.2201)	
	Diameter of needle bearing contact area on countershaft (R side)		38.505–38.515 (1.5159–1.5163)	
	Diameter of needle bearing contact area on countershaft 3rd gear		43.975–43.991 (1.7313–1.7319)	
	Diameter of needle bearing contact area on countershaft 4th gear		31.975–31.991 (1.2589–1.2595)	
	Diameter of needle bearing contact area on countershaft reverse gear collar		32.975–32.991 (1.2982–1.2989)	
	Diameter of needle bearing contact area on countershaft 1st gear collar		32.975–32.991 (1.2982–1.2989)	
	Diameter of needle bearing contact area on reverse idle gear		13.990–14.000 (0.5508–0.5512)	
	Reverse idler shaft holder I.D.		14.416–14.434 (0.5676–0.5683)	
	Mainshaft 2nd gear I.D.		42.000–42.016 (1.6141–1.6148)	
	Mainshaft 1st gear I.D.		36.000–36.016 (1.4173–1.4179)	
	Countershaft 4th gear I.D.		38.000–38.016 (1.4961–1.4966)	
	Countershaft 3rd gear I.D.		49.000–49.016 (1.9291–1.9298)	
	Countershaft 1st gear I.D.		39.000–39.016 (1.5354–1.5361)	
	Countershaft reverse gear I.D.		39.000–39.016 (1.5354–1.5361)	↓
	Reverse idle gear I.D.		18.007–18.020 (0.7086–0.7094)	Wear or damage
	Mainshaft 4th gear end play		0.10–0.22 (0.004–0.009)	—
	Mainshaft 2nd gear end play		0.07–0.15 (0.003–0.006)	Adjustable
	Mainshaft 1st gear end play		0.08–0.24 (0.003–0.009)	—
	Countershaft 3rd gear end play		0.07–0.15 (0.003–0.006)	—
	Countershaft 2nd gear end play		0.07–0.15 (0.003–0.006)	Adjustable
	Reverse idler gear end play		0.05–0.18 (0.002–0.007)	—
	Countershaft reverse gear end play		0.10–0.25 (0.004–0.010)	—

*1st clutch only

(cont'd)

Standards and Service Limits

9. Automatic Transmission (cont'd)

	MEASUREMENT		STANDARD (NEW)	SERVICE LIMIT
Transmission (cont'd)	Thrust washer thickness			
	Mainshaft 2nd gear	A	3.97–4.00 (0.156–0.157)	——
		B	4.02–4.05 (0.158–0.159)	——
		C	4.07–4.10 (0.160–0.161)	——
		D	4.12–4.15 (0.162–0.163)	——
		E	4.17–4.20 (0.164–0.165)	——
		F	4.22–4.25 (0.166–0.167)	——
		G	4.27–4.30 (0.168–0.169)	——
		H	4.32–4.35 (0.170–0.171)	——
		I	4.37–4.40 (0.172–0.173)	——
	Mainshaft bearing contact area (L side)		3.75–3.85 (0.148–0.152)	Wear or damage
	Mainshaft 1st gear		2.43–2.50 (0.096–0.098)	Wear or damage
	"L" collar flange thickness		4.35–4.50 (1.1713–1.1772)	
	Countershaft 4th gear collar thickness	A	47.42–47.45 (1.8669–1.8681)	——
		B	47.47–47.50 (1.8689–1.8701)	——
		C	47.52–47.55 (1.8709–1.8720)	——
		D	47.57–47.60 (1.8728–1.8740)	——
		E	47.62–47.65 (1.8748–1.8760)	——
		F	47.67–47.70 (1.8768–1.8779)	——
		G	47.72–47.75 (1.8787–1.8799)	——
		H	47.77–47.80 (1.8807–1.8819)	——
		I	47.82–47.85 (1.8827–1.8839)	——
		J	47.87–47.90 (1.8846–1.8858)	——
	Thrust washer thickness (mainshaft 1st gear R side)		1.45–1.50 (0.057–0.059)	1.4 (0.055)
	Mainshaft 1st gear collar length		24.50–24.55 (0.4646–0.9665)	——
	Mainshaft 1st gear collar flange thickness		2.5–2.6 (0.098–0.102)	Wear or damage
	Countershaft reverse gear collar length		12.0–12.1 (0.472–0.476)	——
	Countershaft reverse gear collar flange thickness		2.4–2.6 (0.094–0.102)	Wear or damage
	Countershaft 1st gear collar length		12.0–12.1 (0.472–0.476)	——
	Countershaft 1st gear collar flange thickness		2.4–2.6 (0.095–0.102)	Wear or damage
	Diameter of countershaft one-way clutch contact area		83.339–83.365 (3.2811–3.2821)	Wear or damage
	Diameter of parking gear one-way clutch contact area		66.685–66.698 (2.6254–2.6259)	Wear or damage
	Mainshaft feed pipe O.D.		8.97–8.98 (0.3531–0.3535)	8.95 (0.3524)
	Countershaft feed pipe O.D.		7.97–7.98 (0.3138–0.3142)	7.95 (0.31)
	Mainshaft sealing ring 35 mm Thickness		1.980–1.995 (0.0780–0.0785)	1.8 (0.071)
	Mainshaft bushing I.D.		6.018–6.030 (0.2369–0.2374)	6.045 (0.238)
	Mainshaft bushing I.D.		9.000–9.015 (0.3543–0.3549)	9.03 (0.356)
	Countershaft bushing I.D.		8.000–8.015 (0.3150–0.3156)	8.03 (0.316)
	Mainshaft sealing ring groove width		2.025–2.060 (0.0797–0.0811)	2.08 (0.082)
	Selector hub O.D.		51.87–51.90 (2.0421–2.0433)	Wear or damage
Regulator valve body	Sealing ring contact area diameter		35.000–35.025 (1.3780–1.3789)	35.05 (1.38)
Shifting device and parking brake control	Reverse shift fork thickness		5.9–6.0 (0.232–0.236)	5.4 (0.21)
	Parking brake ratchet pawl		——	Wear or other defect
	Parking gear		——	Wear or other defect
	Throttle cam stopper		18.5–18.6 (0.728–0.732)	——
Servo body	Shift fork shaft bore I.D.	A	14.000–14.005 (0.5512–0.5514)	——
		B	14.006–14.010 (0.5514–0.5516)	——
		C	14.011–14.015 (0.5516–0.5518)	——
	Shift fork shaft valve bore I.D.		37.000–37.039 (1.4567–1.4582)	37.045 (1.4585)
Valve body	Oil pump gear side clearance		0.03–0.05 (0.0012–0.0020)	0.07 (0.003)
	Oil pump gear-to-body clearance		Drive: 0.210–0.265 (0.0083–0.0104)	——
			Driven: 0.070–0.125 (0.003–0.005)	——
	Stator camshaft needle bearing contact I.D. (Torque converter side)		27.000–27.021 (1.0630–1.0638)	Wear or damage
	Stator camshaft needle bearing contact I.D. (Oil pump side)		29.000–29.013 (1.1417–1.1422)	——
	Oil pump driven gear I.D.		14.016–14.034 (0.5518–0.5525)	Wear or damage
	Oil pump shaft O.D.		13.980–13.990 (0.5504–0.5508)	Wear or damage

9. Automatic Transmission (cont'd)

Unit: mm (in.)

	MEASUREMENT	STANDARD (NEW)			
Springs		Wire Dia.	O.D.	Free Length	No. of coils
	Low accumulator ball spring	0.29 (0.01)	4.0 (0.16)	14.0 (0.55)	13
	Idle shaft spring A	0.7 (0.03)	5.7 (0.22)	14.6 (0.57)	7
	Idle shaft spring B	0.8 (0.03)	5.6 (0.22)	20.7 (0.81)	11.5
	Servo detent spring	1.0 (0.04)	7.6 (0.30)	14.8 (0.58)	5.5
	Regulator valve spring A	1.8 (0.07)	14.7 (0.58)	87.4 (3.44)	16.5
	Regulator valve spring B	1.8 (0.07)	9.6 (0.38)	44.0 (1.73)	7.5
	Stator reaction spring	6.0 (0.24)	38.4 (1.51)	30.3 (1.19)	2
	Torque converter check valve spring	1.1 (0.04)	8.4 (0.33)	36.4 (1.43)	12
	Relief valve spring	1.0 (0.04)	8.4 (0.33)	52.0 (2.05)	23
	Cooler check valve spring	1.2 (0.05)	8.4 (0.33)	35.7 (1.41)	16.5
	2nd orifice control valve spring	0.8 (0.03)	6.6 (0.26)	38.5 (1.52)	28
	4th orifice control spring	0.9 (0.04)	6.6 (0.26)	27.6 (1.09)	10
	Servo orifice control valve spring	0.9 (0.04)	6.1 (0.24)	35.9 (1.41)	20
	Throttle control valve adjuster spring A	0.8 (0.03)	6.2 (0.24)	30.0 (1.18)	8
	Throttle control valve spring B	1.6 (0.06)	8.5 (0.33)	41.3 (1.63)	13.9
	1–2 shift spring	0.9 (0.04)	8.6 (0.34)	40.4 (1.59)	14.5
	2–3 shift spring	0.9 (0.04)	9.6 (0.38)	39.6 (1.56)	12
	3–4 shift spring	0.7 (0.03)	5.6 (0.22)	48.3 (1.90)	27.8
	Low accumulator spring A	2.8 (0.11)	21.5 (0.85)	58.5 (2.30)	8.3
	Low accumulator spring B	2.3 (0.09)	12.1 (0.48)	40.0 (1.57)	7.4
	Top accumulator spring	3.0 (0.12)	16.4 (0.65)	81.7 (3.22)	16.4
	2nd accumulator spring	2.71 x 4.4 (0.11 x 0.17)	20.0 (0.79)	79.7 (3.14)	16.2
	3rd accumulator spring	2.9 (0.11)	17.9 (0.70)	82.2 (3.24)	12.1
	L/C shift spring	1.1 (0.04)	8.6 (0.34)	51.0 (2.01)	18.6
	L/C timing spring B	0.9 (0.04)	5.6 (0.22)	40.7 (1.60)	30
	L/C control spring	0.8 (0.03)	6.6 (0.26)	39.5 (1.56) 40.2 (1.58) 41.0 (1.61)	25
	Modulator valve spring	1.5 (0.06)	9.4 (0.37)	30.6 (1.20)	9.9
	CPC valve spring A, B (Modulator valve)	1.4 (0.06)	9.4 (0.37)	33.0 (1.30)	10.5
	CPC valve spring A, B (CPC valve)	1.4 (0.06)	9.4 (0.37)	32.4 (1.28)	10.5
	4–3 kick down valve spring	0.9 (0.04)	6.6 (0.26)	32.2 (1.27)	16
	3–2 kick down valve spring	1.0 (0.04)	6.6 (0.26)	40.5 (1.59)	20
	2–1 orifice control spring	0.8 (0.03)	6.4 (0.25)	41.5 (1.63)	22.8
	2nd clutch return spring	6.0 x 6.4 (0.24 x 0.25)	66.4 (2.61) at free	31.0 (1.22)	1.25
	Low clutch return spring	6.3 x 5.82 (0.25 x 0.23)	63.2 (2.49) at free	31.0 (1.22)	1.25
	Servo control valve spring	1.1 (0.04)	8.1 (0.32)	43.3 (2.00)	18

(cont'd)

Standards and Service Limits

9. Automatic Transmission (cont'd)

	MEASUREMENT	STANDARD (NEW)	SERVICE LIMIT
Ring gear	Backlash	0.085–0.142 (0.0033–0.0056)	0.2 (0.0079)
Differential carrier	Pinion shaft bore diameter	18.000–18.018 (0.7087–0.7094)	——
	Carrier-to-pinion shaft clearance	0.016–0.052 (0.0006–0.0020)	0.1 (0.004)
	Driveshaft bore diameter	30.000–30.021 (1.1811–1.1819)	——
	Carrier-to-driveshaft clearance	0.025–0.066 (0.0010–0.0026)	0.12 (0.005)
Differential pinion gear	Backlash	0.08–0.15 (0.003–0.006)	Adjust with a washer.
	Pinion gear bore diameter	18.043–18.061 (0.7104–0.7111)	——
	Pinion gear-to-pinion shaft clearance	0.057–0.095 (0.0022–0.0037)	0.15 (0.006)
Differential taper roller bearing	Preload N•m (kg-m, lb-ft) New	2.7–3.9 (0.28–0.4, 2.0–2.9)	Adjust with a washer.
	Reused	2.5–3.6 (0.25–0.37, 1.8–2.7)	Adjust with a washer.

10. Driveshaft

	MEASUREMENT	STANDARD (NEW)	SERVICE LIMIT
Driveshaft	Right boot As installed	533–537.5 (21.0–21.2)	——
	Left boot As installed	533–537.5 (21.0–21.2)	——

11. Power Steering

	MEASUREMENT	STANDARD (NEW)	SERVICE LIMIT
Steering wheel	Play	10 (0.39) Max.	——
	Pinion starting torque N•m (kg-m, ft-lb)	1.2 (0.12, 0.86)	
Power steering	Pump pressure with valve closed (Oil temp./speed: 40°C (104°F) min/idle. Do not run for more than 5 seconds) kPa (kg/cm², psi)	7845–8826 (80–90, 1138–1280)	
	Fluid capacity Reservoir	0.5 ℓ (0.53 U.S. qt., 0.44 Imp. qt.)	
	At change	approx 1.7 ℓ (1.8 U.S. qt., 1.5 Imp. qt.)	
Power steering belt	Deflection between pulleys with 98 N (10 kg, 22 lb) force	19–24 (0.75–0.94) for used belt 13–16 (0.51–0.63) for new belt	
	Belt tension between pulleys N (kg, lb) (measured with belt tension gauge)	137–333 (14–34, 31–75) for used belt 490–686 (50–70, 110–154) for new belt	

12. Suspension

	MEASUREMENT	STANDARD (NEW)	SERVICE LIMIT
Wheel alignment		Front / Rear	
	Camber	0°00′ ± 1° / 0°00′ ± 1°	
	Caster	1°40′ ± 1°	
	Toe-in	0 ± 3 / 0^{+4}_{0} (0 ± 0.12) / $(0^{+0.16}_{0})$	
Wheel	Rim runout Aluminum Axial	0–0.3 (0–0.012)	——
	Radial	0–0.3 (0–0.012)	——
Wheel bearing	End play Front	0	0.05
	Rear	0	0.05

13. Brake

Unit: mm (in.)

	MEASUREMENT		STANDARD (NEW)	SERVICE LIMIT
Parking brake lever	Play in stroke 200 N (20 kg, 44 lb)		To be locked when pulled 7–11 notches	
Foot brake pedal	Pedal height Free play		170.6 (6.7) from floor 1–5 (0.04–0.20)	— 5 (0.20)
Master cylinder	Piston-to-pushrod clearance		0–0.4 (0–0.016)	—
Disc brake	Disc thickness	Front	21.0 (0.83)	19.0 (0.75)
		Rear	10.0 (0.39)	8.0 (0.31)
	Disc runout	Front/Rear	—	0.1 (0.004)/0.15 (0.006)
	Disc parallelism		—	0.015 (0.0006)
	Pad thickness	Front	11.5 (0.45)	3.0 (0.12)
		Rear	10.0 (0.39)	3.0 (0.12)
Brake booster	Characteristics	Vacuum (mmHg)	Pedal Pressure kg (lb)	Line Pressure kPa (kg/cm^2, psi)
		0	20 (44)	774 (7.9, 112)
		300	20 (44)	6135 (62.6, 890)
		500	20 (44)	8252 (84.2, 1198)

15. Air Conditioner

	MEASUREMENT	STANDARD (NEW)
Compressor belt	Deflection between pulleys with 98 N (10 kg, 22 lb) force	9–11 (0.35–0.43) for used belt 7–9 (0.28–0.35) for new belt
	Belt tension between pulleys N (kg, lb) (measured with belt tension gauge)	441–637 (45–65, 99–143) for used belt 637–824 (65–84, 143–185) for new belt

16. Electrical

	MEASUREMENT	STANDARD (NEW)	
Ignition coil	Rated voltage	12 Volts	
	Primary winding resistance	0.35–0.42 ohms	
	Secondary winding resistance	16,000–24,000 ohms	
Ignition wire	Resistance	25,000 ohms max.	
Spark plug	Type	BCPR6E-11 (NGK), Q20PR-U11 (ND) BCPR6EY-N11 (NGK)*2 BCPR7E-11 (NGK), Q22PR-U11 (ND) BCPR7EY-N11 (NGK)*2 BCPR5EY-11 (NGK)*1, Q16PR-U11 (ND)*1 BCPR5EY-N11 (NGK)*1 (or equivalent) *1: KQ only *2: With catalytic converter	
	Gap	1.0–1.1 (0.039–0.043)	
Ignition timing	At idling	15° ± 2°BTDC	
Battery	Lighting capacity (20-hour rate)	65 Ampere Hours (KE, KQ only), 65 Ampere Hours (Others)	
	Starting capacity (voltage after 5 seconds)	8.4 V minimum at 300 Ampere draw /–15°C	
Alternator	Output	13.5 V/70 A	
	Coil resistance (rotor)	2.8–3.0 ohms	—
	Slip ring O.D.	14.4 (0.57)	14.0 (0.55)
	Brush length	10.5 (0.41)	5.5 (0.22)
	Brush spring tension	300–360 g (10.6–12.7 oz)	—
Alternator belt	Deflection between pulleys with 98 N (10 kg, 22 lb) force	18–22 (0.71–0.87) for used belt 13–16 (0.51–0.63) for new belt	
	Belt tension between pulleys N (kg, lb) (measured with belt tension gauge)	206–363 (21–37, 46–82) for used belt 431–647 (44–66, 97–146) for new belt	

Starting motor		1.6 KW (ND)	
	MEASUREMENT	STANDARD (NEW)	SERVICE LIMIT
	Mica depth	0.5–0.8 (0.015–0.031)	0.2 (0.008)
	Commutator runout	0–0.05 (0–0.002)	0.4 (0.016)
	Commutator O.D.	29.9–30.0 (1.177–1.181)	29.0 (1.14)
	Brush length	15.0–15.5 (0.59–0.61)	10.0 (0.39)
	Spring pressure (new)	17–24 N (1.7–2.4 kg, 3.7–5.3 lb.)	—

Design Specifications

	ITEMS	METRIC	ENGLISH	NOTES
DIMENSIONS	Overall Length	4,755 mm	187.2 in.	
		4,780 mm	188.2 in.	with bumper guard
		4,775 mm	188.0 in.	KY type
	Overall Width	1,745 mm	68.7 in.	
	Overall Height	1,370 mm	53.9 in.	
		1,380 mm	54.3 in.	KY type
	Wheelbase	2,705 mm	106.5 in.	
	Track F/R	1,500/1,500 mm	59.1/59.1 in.	
	Ground Clearance	150 mm	5.9 in.	
		160 mm	6.0 in.	KY type
	Seating Capacity	Five		
WEIGHTS	Engine weight	175 kg	386 lb.	
	Curb Weight (EC models)			
	KG M/T	1,405 kg	3,097 lb	
	A/T	1,425 kg	3,142 lb	
	KB M/T	1,435 kg	3,164 lb	
	A/T	1,455 kg	3,208 lb	
	KF M/T	1,425 kg	3,142 lb	
	A/T	1,445 kg	3,186 lb	
	KX, KS, KW M/T	1,415 kg	3,120 lb	
	A/T	1,435 kg	3,164 lb	
	KE M/T	1,420 kg	3,131 lb	
	A/T	1,440 kg	3,175 lb	
	Weight Distribution Front/Rear (EC models)			
	KG M/T	885/520 kg	1,951/1,146 lb	
	A/T	905/520 kg	1,995/1,146 lb	
	KB M/T	905/530 kg	1,995/1,168 lb	
	A/T	925/530 kg	2,039/1,168 lb	
	KF M/T	900/525 kg	1,984/1,157 lb	
	A/T	920/525 kg	2,028/1,157 lb	
	KX, KS, KW M/T	890/525 kg	1,962/1,157 lb	
	A/T	910/525 kg	2,006/1,157 lb	
	KE M/T	900/520 kg	1,984/1,146 lb	
	A/T	920/520 kg	2,028/1,146 lb	
	Max. Permissible Weight	1,920 kg	4,223 lb	EC models
	Curb Weight (General models)			
	With CATA M/T	1,395 kg	3,075 lb	
	A/T	1,415 kg	3,120 lb	
	Without CATA M/T	1,435 kg	3,164 lb	KY type
	A/T	1,455 kg	3,208 lb	KY type
	M/T	1,410 kg	3,108 lb	Others
	A/T	1,430 kg	3,152 lb	Others
	Weight Distribution Front/Rear (General models)			
	With CATA M/T	880/515 kg	1,940/1,135 lb	
	A/T	900/515 kg	1,984/1,135 lb	
	Without CATA M/T	900/535 kg	1,984/1,179 lb	KY type
	A/T	920/535 kg	2,028/1,179 lb	KY type
	M/T	895/515 kg	1,973/1,135 lb	Others
	A/T	915/515 kg	2,017/1,135 lb	Others
	Max. Vehicle Weight	1,980 kg	4,365 lb	KY type
	Max. Loaded Vehicle Weight (ADR)	1,845 kg	4,068 lb	KQ type
ENGINE	Type	Water cooled, 4-stroke O.H.C., gasoline engine		
	Cylinder Arrangement	V6-Cylinder, transverse		
	Bore and Stroke	87.0 x 75.0 mm	3.43 x 2.95 in.	
	Displacement	2,675 cm^3 (cc)	163 cu. in.	
	Compression Ratio with catalytic converter	9.0 : 1		
	without catalytic converter	9.4 : 1		
	Valve Train	Belt driven, single overhead camshaft		
	Lubrication System	Trochoid pump		
	Fuel Required with catalytic converter	Unleaded gasoline with 91 research octane number or higher.		
	without catalytic converter	Leaded gasoline with 97 research octane number or higher.		

	ITEMS	METRIC	ENGLISH	NOTES
STARTER	Type ND	Gear reduction		
	Normal output	1.7 KW		
	Nominal voltage	12 V		
	Hour rating	30 seconds		
	Direction of rotation	Counterclockwise as viewed from gear end		
	Weight	4.6 kg	10.1 lb	
TRANSMISSION	Clutch M/T	Single plate dry, diaphragm spring		
	A/T	Torque Converter		
	Transmission M/T	Synchronized 5 forward 1 reverse		
	A/T	Electronically controlled 4 forward speed automatic; 1 reverse		
	Primary Reduction	Direct 1 : 1		
	Gear Ratio	M/T	A/T	
	1st	2.923	2.647	
	2nd	1.789	1.555	
	3rd	1.222	1.058	
	4th	0.909	0.794	
	5th	0.750	—	
	Reverse	3.000	1.904	
	Final Reduction M/T	Single helical gear, 4.200		
	A/T	Single helical gear, 4.266		
	Clutch Lining Area	176 cm²	27.3 sq. in.	
STEERING SYSTEM	Type	Rack and Pinion		
	Overall Ratio	17.6 : 1		
	Turns, lock-to-lock	3.36		
	Steering Wheel Dia.	385 mm	15.2 in.	
	Power Steering Oil Capacity	1.7 ℓ	1.8 U.S qt., 1.5 Imp. qt.	
	Power Steering Oil	Genuine Power Steering Fluid P/N 08208-99961		
SUSPENSION	Front	Independent Double wishbone, coil spring		
	Rear	Independent Double wishbone, coil spring		
	Shock Absorber, Front and Rear	Telescopic, hydraulic		
WHEEL ALIGNMENT	Camber Front and Rear	0°		
	Caster	1°40′		
	Toe-in Front	0 mm	0 in.	
	Rear	0 mm	0 in.	
BRAKE SYSTEM	Type, Front	Power assisted self-adjusting ventilated disc.		
	Type, Rear	Power assisted self-adjusting solid disc.		
	Pad and Lining Surfase Area: Front/Rear	50.0/30.0 cm²	7.8/4.6 sq. in.	
	Parking Brake Kind and Type	Mechanical expanding, rear two wheel brakes		
TIRES	Size	205/60 VR15 or 205/60 R15 90 V		
AIR CONDITIONER	Cooling capacity	4,280 kcal/h	16,981 BTU/h	
	— Conditions:			
	Compressor Revolution Speed	1,800 min⁻¹ (rpm)		
	Outside air temperature	27.5°C	81.5°F	
	Outside air humidity	50%		
	Condenser air temperature	35°C	95°F	
	Condenser air velocity	4.5 m/sec.	14.8 ft/sec.	
	Blower capacity	420 m³/h	14,836 cu. ft/h	
	Compressor (NIPPONDENSO) Type	Swash plate type		
	No. of cylinders	10		
	Capacity	172 cc/rev.	10.49 cu. in/rev.	
	Max. speed	8,000 min⁻¹ (rpm)		
	Lubricant/capacity	80 cc	2.7 U.S. oz.	
	Condenser	Corrugated fin type		
	Evaporator	Corrugated fin type		
	Blower Type	Sirocco fan		
	Motor input	185 W (12 V)		
	Speed control	Infinitely variable		
	Max. capacity	420 m³/h	14,836 cu. ft/h	
	Temp. Control	Air-mix type		
	Comp. Clutch Type	Dry, single plate, V-belt-1A		
	Power consumption	40 W max.	12 V	
	Refrigerant Type	R-12		
	Quantity	0.90 ± 0.05 kg	1.88 ± 0.11 lb.	

Design Specifications

	ITEMS	METRIC	ENGLISH	NOTES
ELECTRICAL	Battery	EC: 12 V–65 AH/General: 12 V–60 AH		
	Starter	12 V–1.7 kW		
	Alternator	12 V–70 amps		
	Fuses In the fuse box	7.5 A, 10 A, 15 A, 20 A		
	In the relay box	7.5 A, 10 A, 15 A, 20 A, 30 A, 40 A, 70 A		
	Headlights High/Low	12 V–60/55 W		
	Front Turn Signal Lights	12 V–21 W		
	Rear Turn Signal Lights	12 V–21 W		
	Side Turn Signal Lights	12 V–5 W		except KQ
	Stop/Taillights	12 V–27/5 W		
	Front Marker Lights	12 V–5 W		
	Rear Marker Lights	12 V–5 W		
	Back-up Lights	12 V–21 W		
	License Plate Lights	12 V–5 W		
	Gauge Lights	12 V–3.4/3.0/1.4 W		
	Indicator Lights	12 V–1.2 W, 1.4 W		
	Warning Lights	12 V–1.4 W		
	Glove Box Lights	12 V–3.4 W		
	Dome Light	12 V–8 W		
	Trunk Light	12 V–3.4 W		
	Door Courtesy Lights	12 V–3.4 W		
	Illumination and Pilot Lights	12 V–1.4 W, 1.12 W, 1.1 W, 0.91 W, 0.7 W, 0.56 W, LED		
	Heater Illumination Lights	12 V–1.4 W, 2 W		
	Map Lights	12 V–5 W		
	Vanity Mirror Light	12 V–2 W		

Body Specifications

Unit: mm (in.)

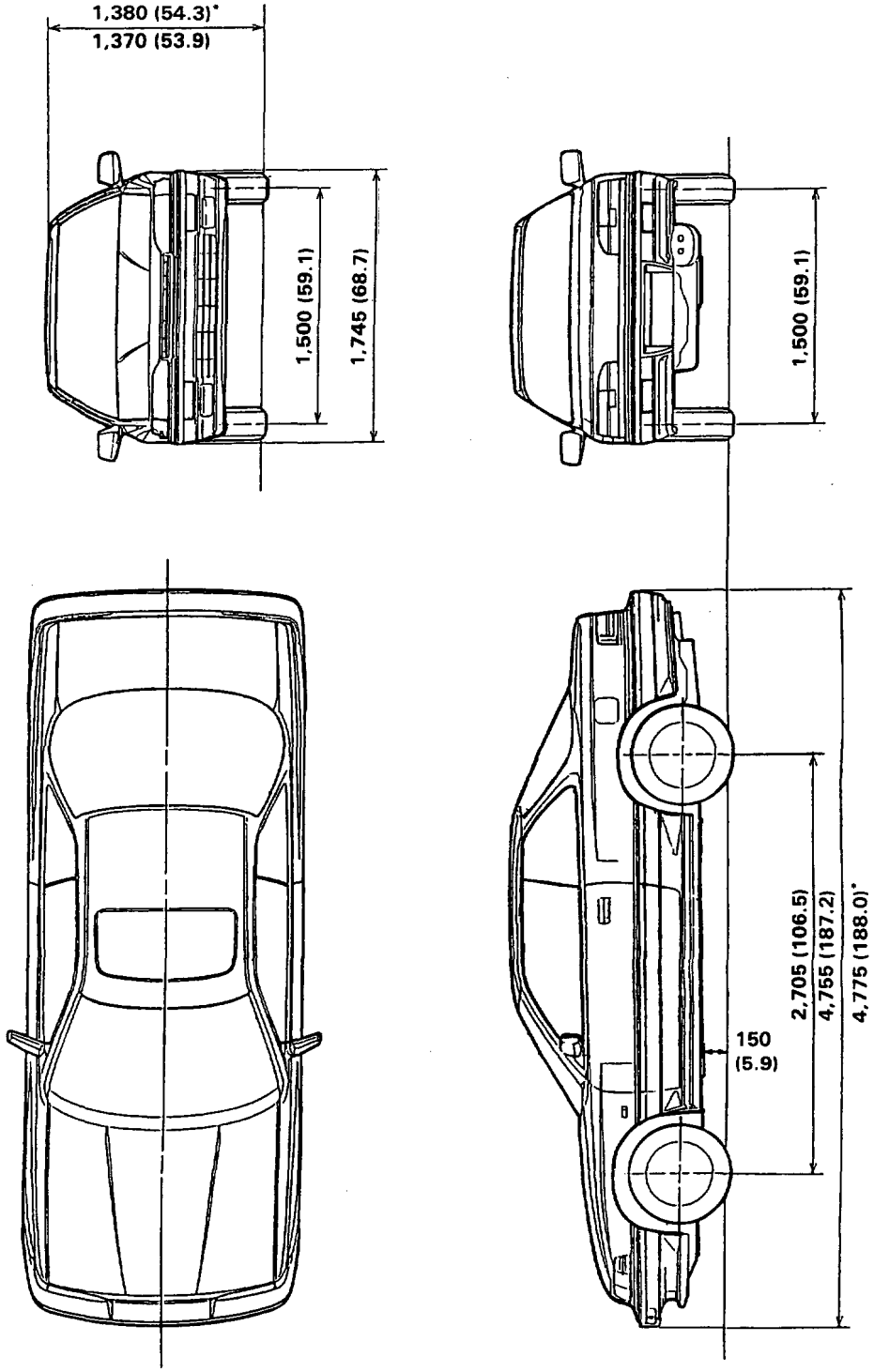

* : KY type

Frame Repair Chart

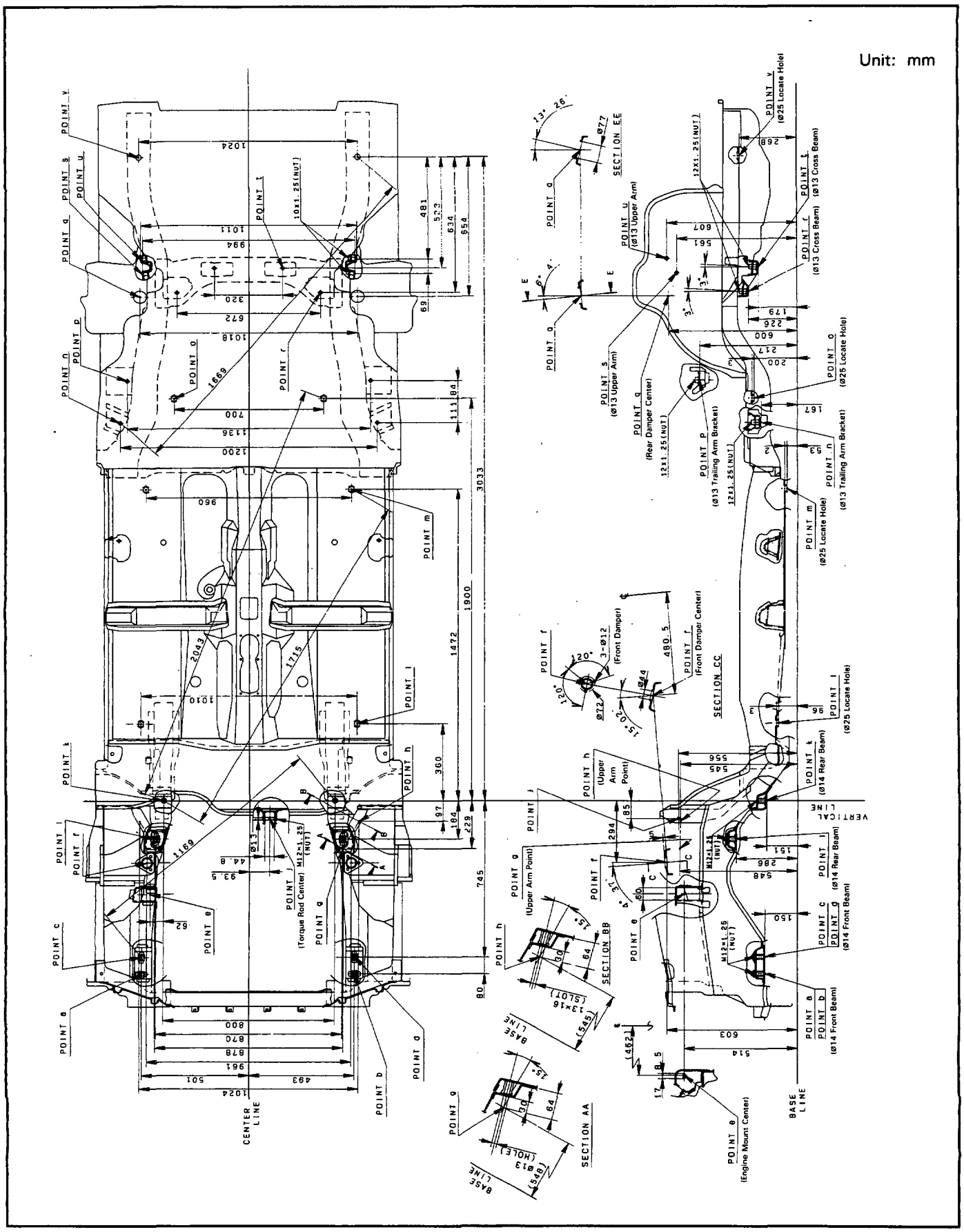

Lubrication Points

No.	LUBRICATION POINTS		LUBRICANT
1	Engine		API Service Grade: SE or SF SAE Viscosity: See chart below
2	Transmission	Manual Automatic	API Service Grade: SE or SF SAE10W—30 or 10W—40 grade oil DEXRON® or DEXRON® II Automatic transmission fluid
3	Brake line (Including ALB line for ALB models)		Brake fluid DOT 3 or DOT 4
4	Clutch line		Brake fluid DOT 3
5	Steering gearbox (Power)		Power Steering grease P/N 08733-B070E
6 7 8 9 10 11 12 13 14 15 16 17 18 19 20 21 22 23	Steering ball joint Steering Boot Shift lever pivot (Manual) Shift rod clevis bushings Select lever (Automatic) Pedal linkage Throttle cable end Brake master cylinder pushrod Parking brake wire end Trunk hinges Door hinges upper and lower Door opening detents Fuel filler lid Engine hood hinges Engine hood latch Parking brake equalizer Clutch release fork Clutch master cylinder pushrod		Multi-purpose Grease
24	Caliper	Piston seal Dust seal Caliper pin Piston	Silicone Grease
25	Power steering system		Power steering fluid P/N 08208—99961

Recommended Engine oil
(SE or SF Grade Only)

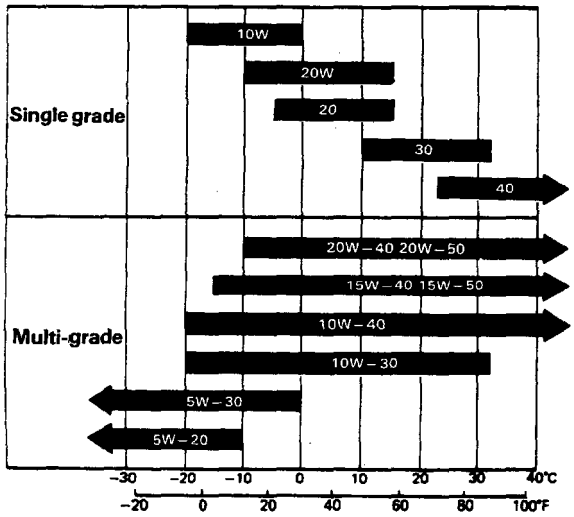

Engine oil viscosity for
ambient temperature ranges.

CAUTION: Used engine oil may cause skin cancer if repeatedly left in contact with the skin for prolonged periods. Although this is unlikely unless you handle used oil on a daily basis, it is still advisable to thoroughly wash your hands with soap and water as soon as possible after handling used oil.

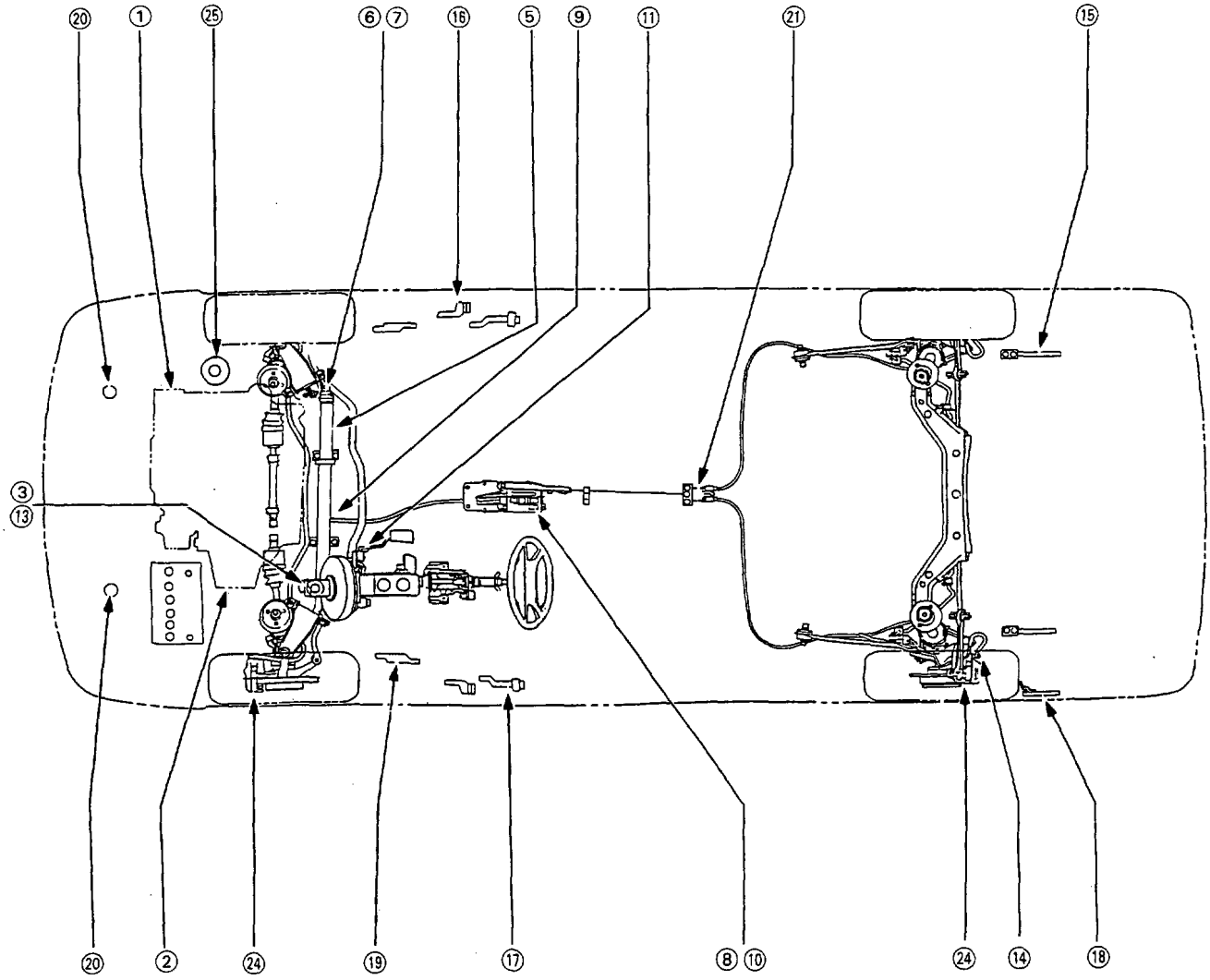
⑳
①
㉕
⑥⑦
⑯
⑤
⑨
⑪
㉑
⑮
③
⑬
⑳
②
㉔
⑲
⑰
⑧⑩
㉔
⑭
⑱

Maintenance Schedule

Service at the interval of listed x 1,000 km (miles) or after that number of months, whichever comes first.	R—Replace I—Inspect After inspection, clean, adjust, repair or replace if necessary					
ITEMS	x 1,000 km	20	40	60	80	100
	x 1,000 miles	12	24	36	48	60
	months	12	24	36	48	60
Idle speed and idle CO *5		I	I	I	I	I
Idle speed and idle CO *6						I
Alternator drive belt			I		I	
Timing belt						R
Water pump						I
■ Engine oil and oil filter		Replace every 10,000 km (6,000 miles) or 6 months				
■ Transmission oil			R		R	
■ Radiator coolant					R*1	
Cooling system, hoses and connections			I		I	
E.G.R. system *4						I
E.G.R. system *2				I		I
E.G.R. filter *2						R
Secondary air supply system *4						I
Air cleaner element *7			R		R	
Air cleaner element *8		R	R	R	R	R
Fuel filter			R		R	
Tank, fuel line and connections			I		I	
Evaporative emission control system *3						I
Ignition timing and control system *5			I		I	
Ignition timing and control system *6						I
Spark plugs *2		R	R	R	R	R
Spark plugs *9			R*10		R*10	
Distributor cap and rotor *5			I		I	
Distributor cap and rotor *6						I
Ignition wiring *5			I		I	
Ignition wiring *6						I
Positive crankcase ventilation valve *5			I		I	
Positive crankcase ventilation valve *6						I
Brake hoses, lines (Including ALB hoses and pipes for ALB models)		I	I	I	I	I
Brake fluid (Including ALB fluid for ALB models)			R		R	
Front brake discs and calipers		I	I	I	I	I
Front brake pads		Inspect every 10,000 km (6,000 miles) or 6 months				
Rear brake discs, calipers and pads			I		I	
Parking brake		I	I		I	

■ These service intervals assume routine checking and replenishment has been done, as needed, by the customer.

Service at the interval of listed x 1,000 km (miles) or after that number of months, whichever comes first.	R—Replace I—Inspect After inspection, clean, adjust, repair or replace if necessary					
ITEMS	x 1,000 km	20	40	60	80	100
	x 1,000 miles	12	24	36	48	60
	months	12	24	36	48	60
Exhaust pipe and muffler		I	I	I	I	I
Suspension mounting bolts		I	I	I	I	I
Front wheel alignment		I	I	I	I	I
Steering operation, tie rod ends, steering gear box and boots		I	I		I	
ALB high pressure hose (for ALB models)					R	
ALB operation (for ALB models)		I	I		I	
Power steering system		I	I	I	I	I
Power steering pump belt			I		I	
Catalytic converter heat shield (with catalytic converter)						I

*1 Thereafter, replace every 2 years or 40,000 km (24,000 miles), whichever comes first.
*2 Only for cars using leaded gasoline
*3 Only for cars using unleaded gasoline and KY type
*4 Only for cars using unleaded gasoline except KQ
*5 Except for KS and KX
*6 For KS and KX
*7 For European and KQ type
*8 Except for European and KQ type
*9 Only for cars using unleaded gasoline.
*10 For KS type, replace every 2 years or 40,000 km (24,000 miles), whichever comes first after 30,000 km (18,000 miles).

CAUTION: The following items must be serviced more frequently on cars normally used under severe driving conditions. Refer to the chart below for the appropriate maintenance intervals.

Servere driving conditions include:
A: Repeated short distance driving
B: Driving in dusty conditions
C: Driving in severe cold weather
D: Driving in areas using road salt or other corrosive materials
E: Driving on rough and/or muddy roads
F: Towing a trailer

R—Replace
I—Inspect. After inspection, clean, adjust, repair or replace if necessary.

Condition	Maintenance item	Maintenance operation	Interval
A B • • • F	Engine oil and oil filter	R	Every 5,000 km (3,000 miles) or 3 months
• • • • • F	Transmission oil	R	Every 20,000 km (12,000 miles) or 12 months
A B • D E F	Front brake discs and calipers	I	Every 10,000 km (6,000 miles) or 6 months
A B • D E F	Rear brake discs, calipers and pads	I	Every 20,000 km (12,000 miles) or 12 months
• B C • E •	Power steering system	I	Every 10,000 km (6,000 miles) or 6 months

CAUTION: Used engine oil may cause skin cancer if repeatedly left in contact with the skin for prolonged periods. Although this is unlikely unless you handle used oil on a daily basis, it is still advisable to thoroughly wash your hands with soap and water as soon as possible after handling used oil.

Special Tools

No.	Tool Number	Description	Q'ty	Remarks
①	07JGG–0010100	Belt Tension Gauge	1	

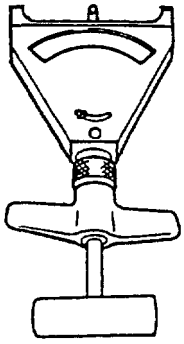

①

Drive Belts Inspection

Drive Belts Deflection:
(When applying a foce of 98 N (10 kg, 22 lb)

	Used Belt	New Belt
① Alternator Belt	18–22 mm (0.71–0.87 in.)	13–16 mm (0.51–0.63 in.)
② P/S Pump Belt	19–24 mm (0.75–0.94 in.)	13–16 mm (0.51–0.63 in.)
③ A/C Compressor Belt	9–11 mm (0.35–0.43 in.)	7–9 mm (0.28–0.35 in.)

Test by the tension gauge:

	Used Belt	New Belt
① Alternator Belt	206–363 N (21–37 kg / 46–82 lb)	431–647 N (44–66 kg / 97–146 lb)
② P/S Pump Belt	137–333 N (14–34 kg / 31–75 lb)	490–686 N (50–70 kg / 110–154 lb)
③ A/C Compressor Belt	441–637 N (45–65 kg / 99–143 lb)	637–824 N (65–85 kg / 143–185 lb)

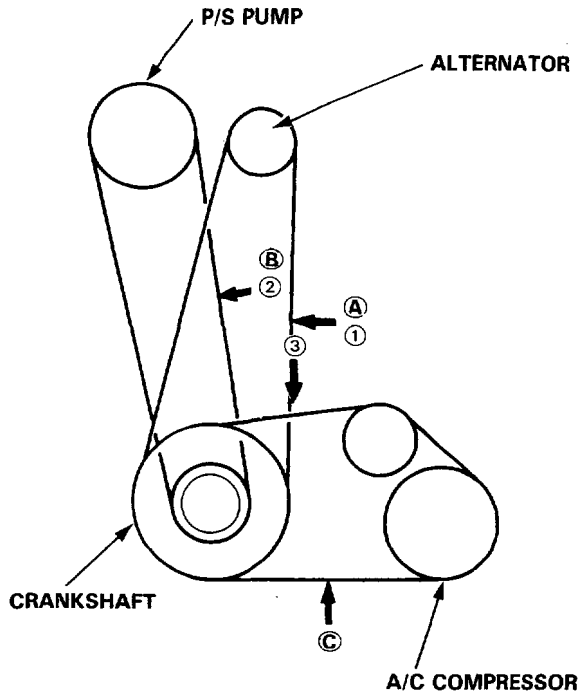

Alternator Belt Adjustment

NOTE: If there are cracks or any damage evident on the belt, replace it with new one.

1. Apply force of 98 N (10 kg, 22 lb) and measure the deflection, between the P/S pump pulley and the crankshaft pulley.

   Deflection: 18–22 mm (0.71–0.87 in.)

   NOTE: On a brand-new belt, the deflection should be 13–16 mm (0.51–0.63 in.) when first measured.

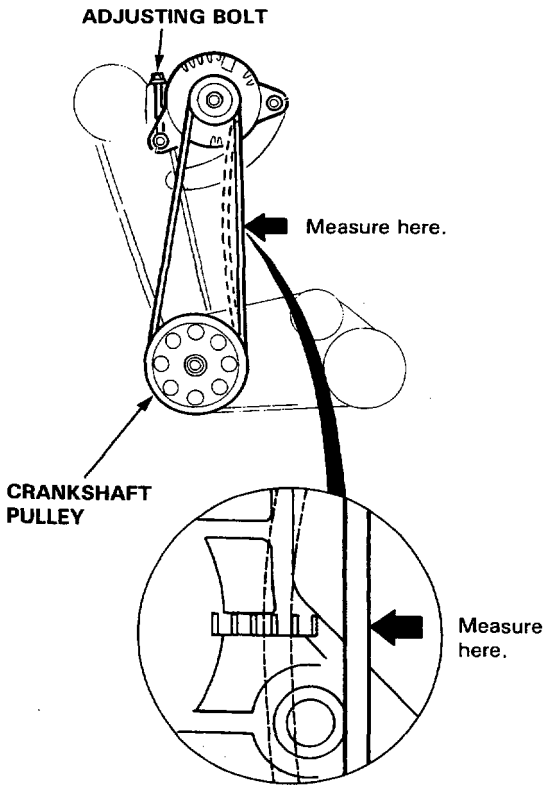

Measure with the belt tension gauge:
Attach the belt tension gauge to the belt and measure the tension of the belt.

Tension: 206–363 N (21–37 kg, 46–82 lb)

NOTE:
- On a brand-new belt, the tension should be 431–647 N (44–66 kg, 97–146 lb) when first measured.
- See the instruction for the belt tension gauge.

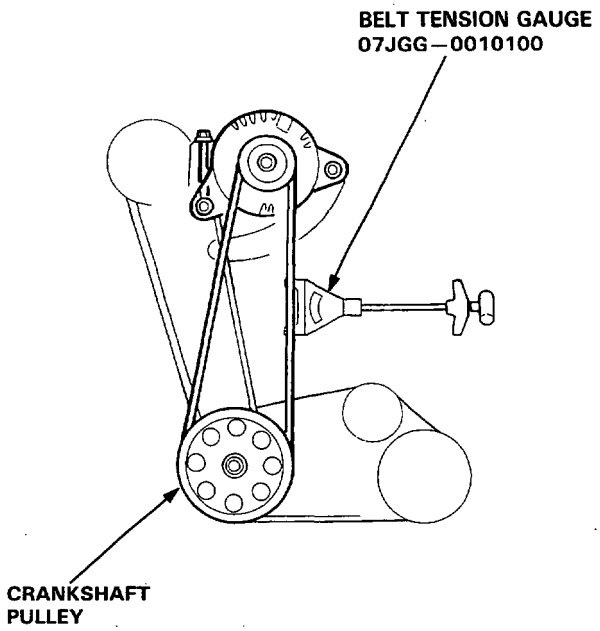

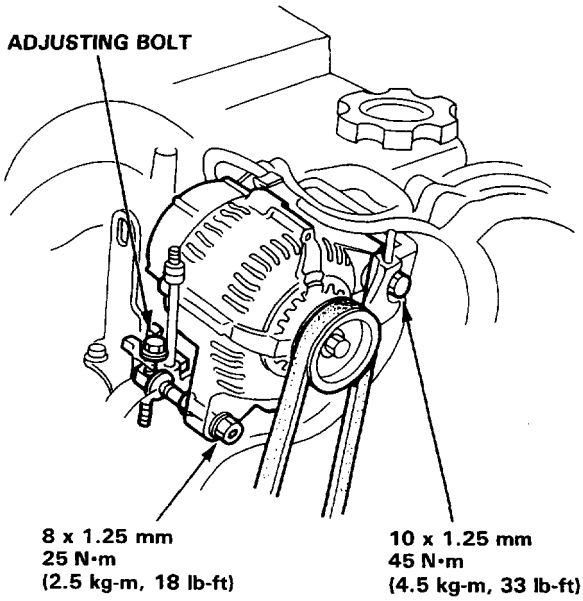

2. Loosen the bolt and nut, and turn the adjusting bolt to get proper tension, then retighten the bolt and nut.

3. Recheck the deflection of the belt.

P/S Pump Belt Adjustment

NOTE: If there are cracks or any damage evident on the belt, replace it with new one.

1. Apply force of 98 N (10 kg, 22 lb) and measure the deflection, between the P/S pump pulley and the crankshaft pulley.

   Deflection: 19—24 mm (0.75—0.94 in.)

   NOTE: On a brand-new belt, the deflection should be 13—16 mm (0.51—0.63 in.) when first measured.

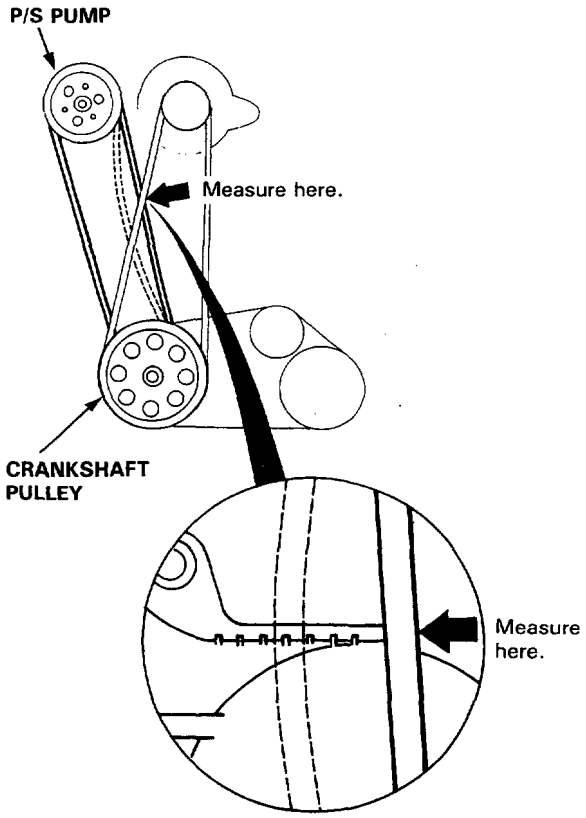

Measure with the belt tension gauge:
Attach the belt tension gauge to the belt and measure the tension of the belt.

Tension: 137—333 N (14—34 kg, 31—75 lb)

NOTE:
- On a brand-new belt, the tension should be 490—686 (50—70 kg, 110—154 lb) when first measured.
- See the instruction for the belt tension gauge.

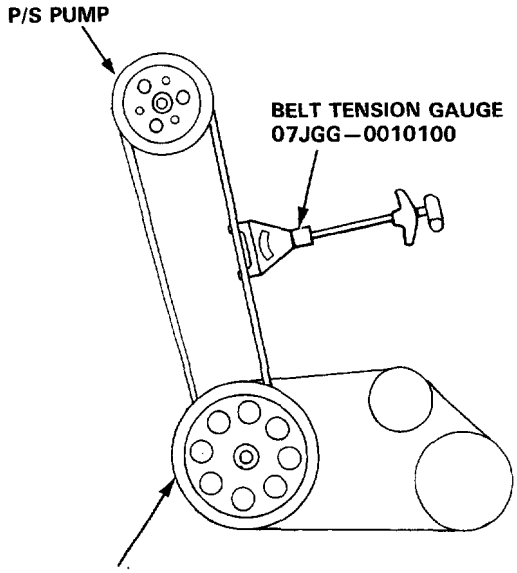

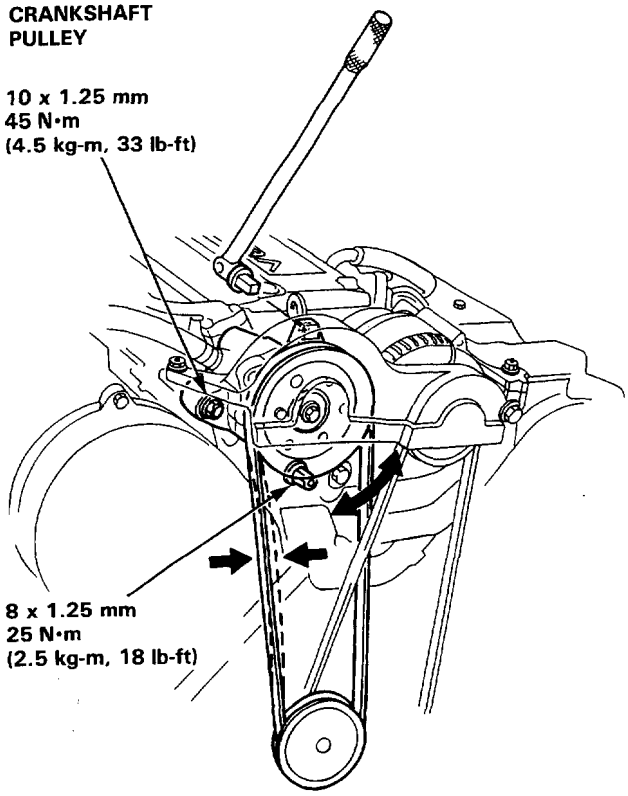

2. Loosen the bolt and nut.

3. Move the P/S pump to obtain the proper tension, then retighten the bolt and nut.

4. Start the engine and turn the steering wheel from lock to lock serveral times, then recheck the belt tension.

A/C Belt Adjustment

NOTE: If there are cracks or any damage evident on the belt, replace it with new one.

1. Apply force of 98 N (10 kg, 22 lb) and measure the deflection, between the P/S pump pulley and the crankshaft pulley.

   Deflection: 9—11 mm (0.35—0.43 in.)

   NOTE: On a brand-new belt, the deflection should be 7—9 mm (0.28—0.35 in.) when first measured.

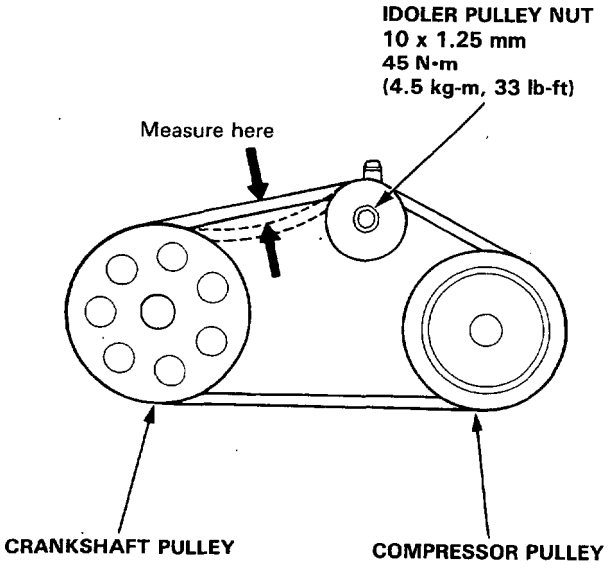

Measure with the belt tension gauge:
Attach the belt tension gauge to the belt and measure the tension of the belt.

Tension: 441—637 N (45—65 kg, 99—143 lb)

NOTE:
- On a brand-new belt, the tension should be 637—824 (65—85 kg, 143—185 lb) when first measured.
- See the instruction for the belt tension gauge.

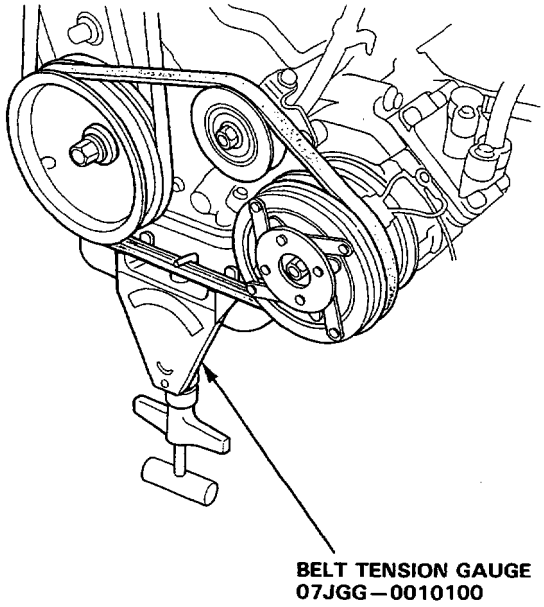

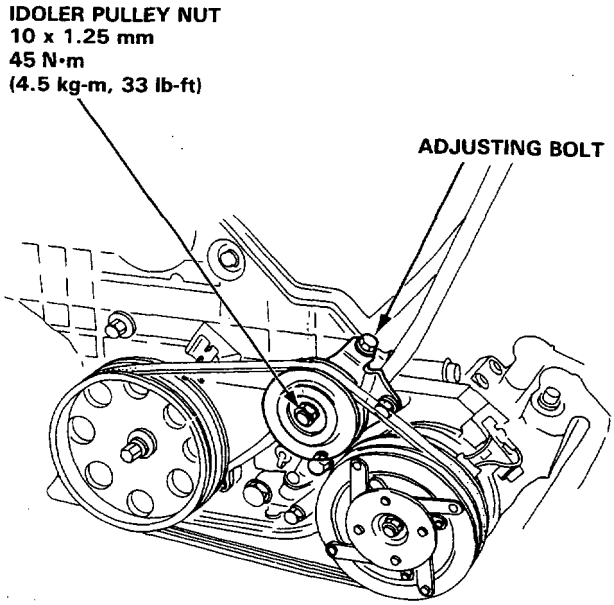

2. Loosen the idler pulley nut.

3. Turn the adjusting bolt to get the proper tension, then retighten the nut.

4. Recheck the deflection of the belt.

Timing Belt

Illustrated Index

NOTE: Before removing, mark direction of rotation.

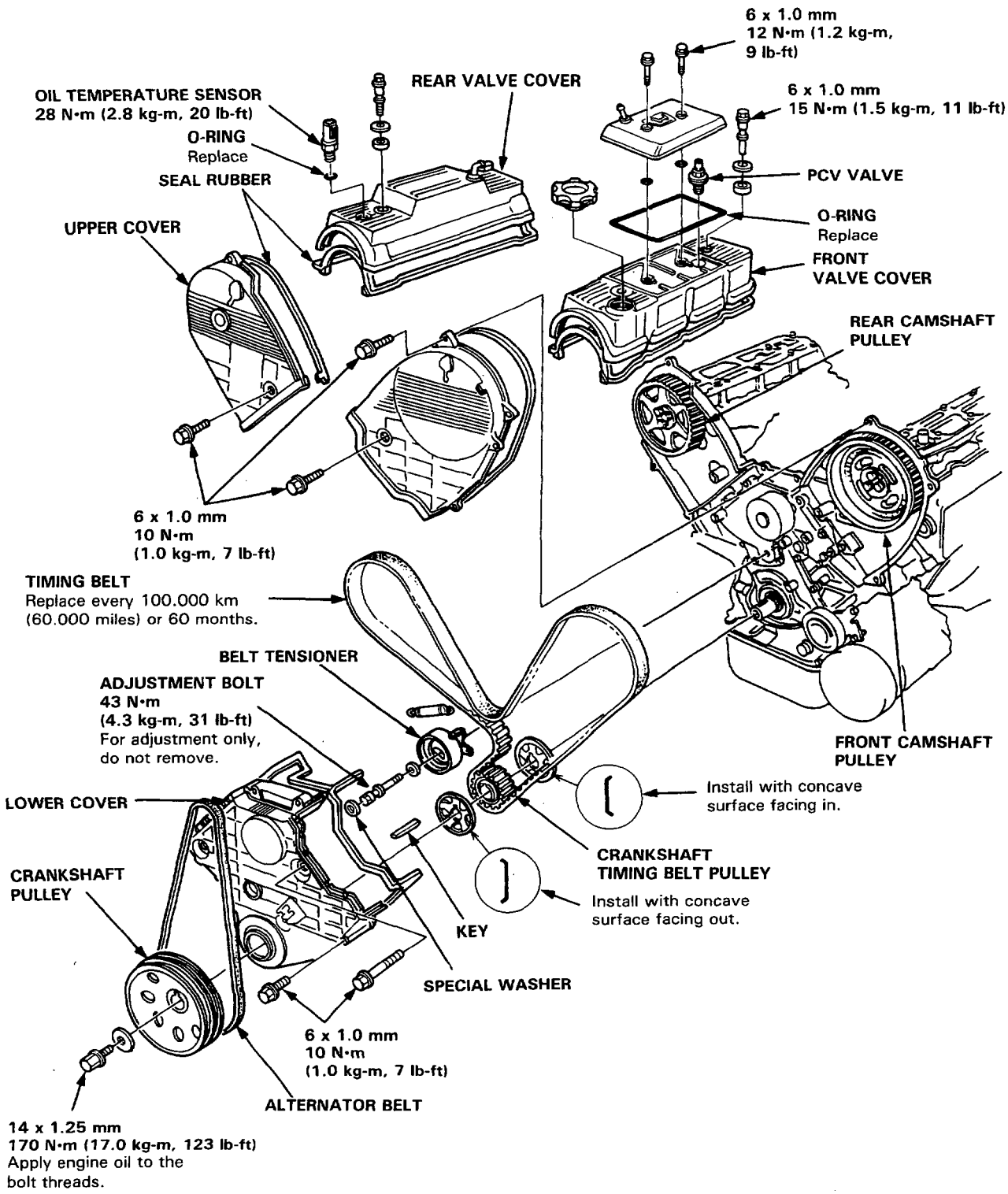

Water Pump

Inspection

1. Remove the timing belt.
2. Check the water pump pulley turns freely.
3. Check the signs of seal leakage.

   NOTE: Small amount of "weeping" from the bleed hole is normal.

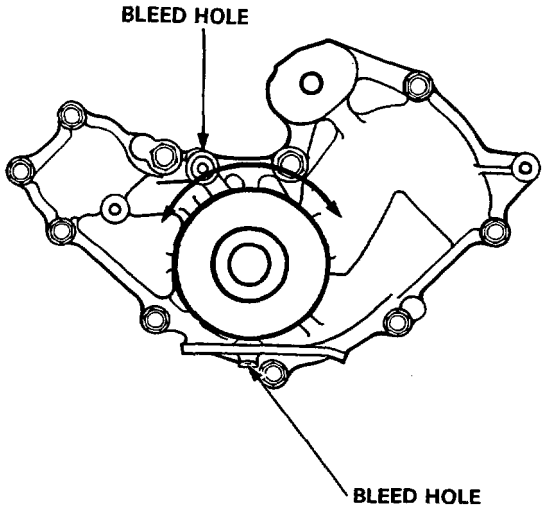

Special Tools

Ref. No.	Tool Number	Description	Q'ty	Page Reference
①	07KAJ–PP80200	Test Harness	1	page 6-9

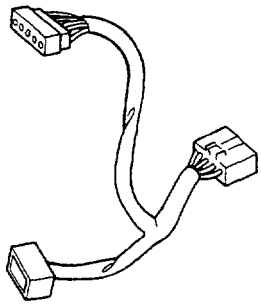

①

KX, KG, KS

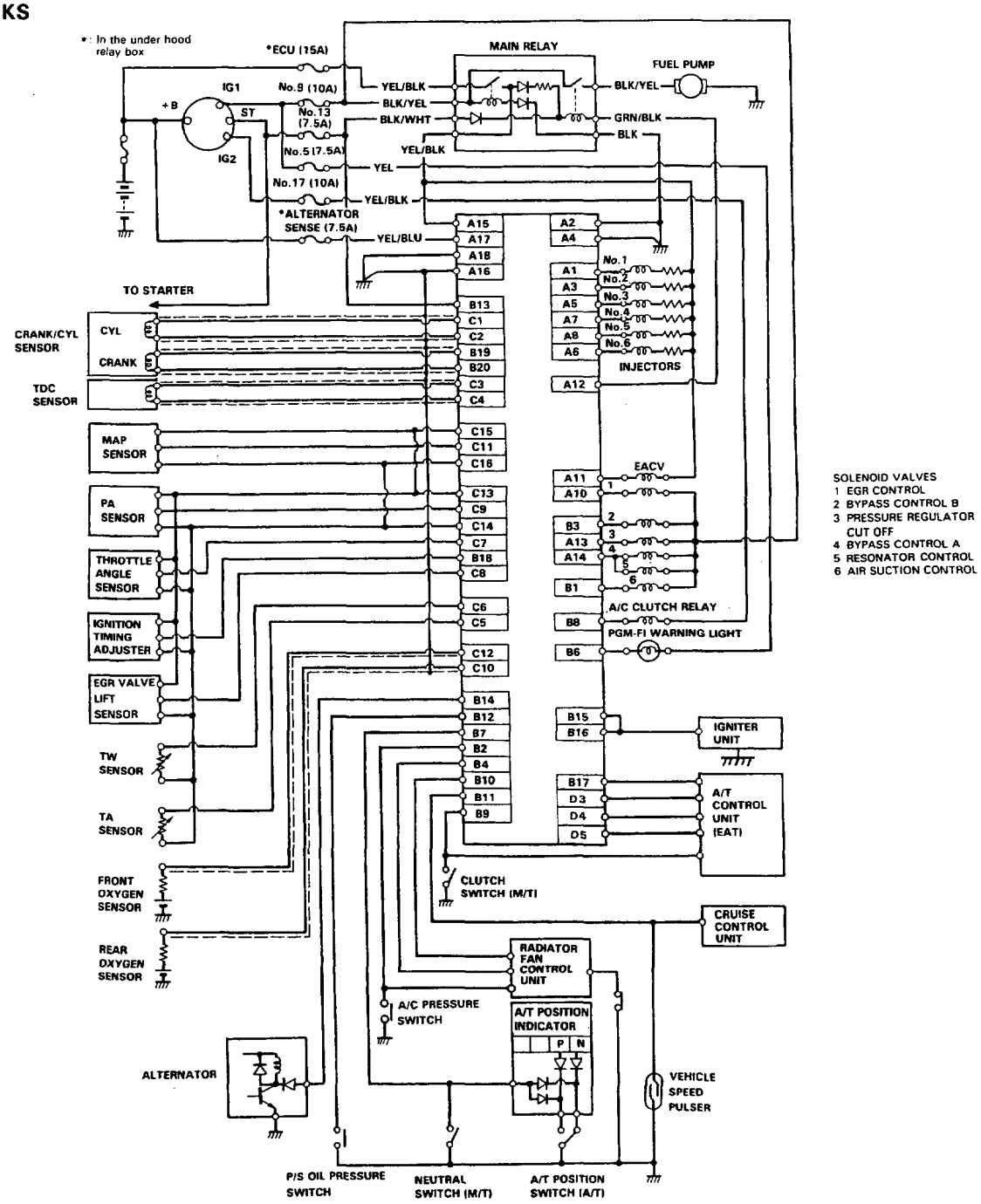

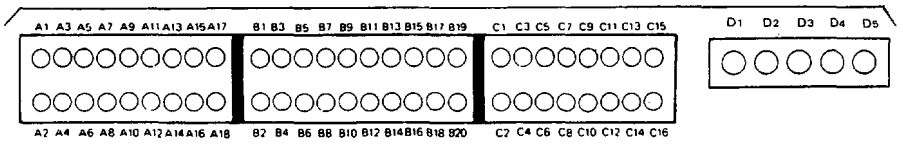

TERMINAL LOCATION

Electrical Connections

KB, KE, KF, KW

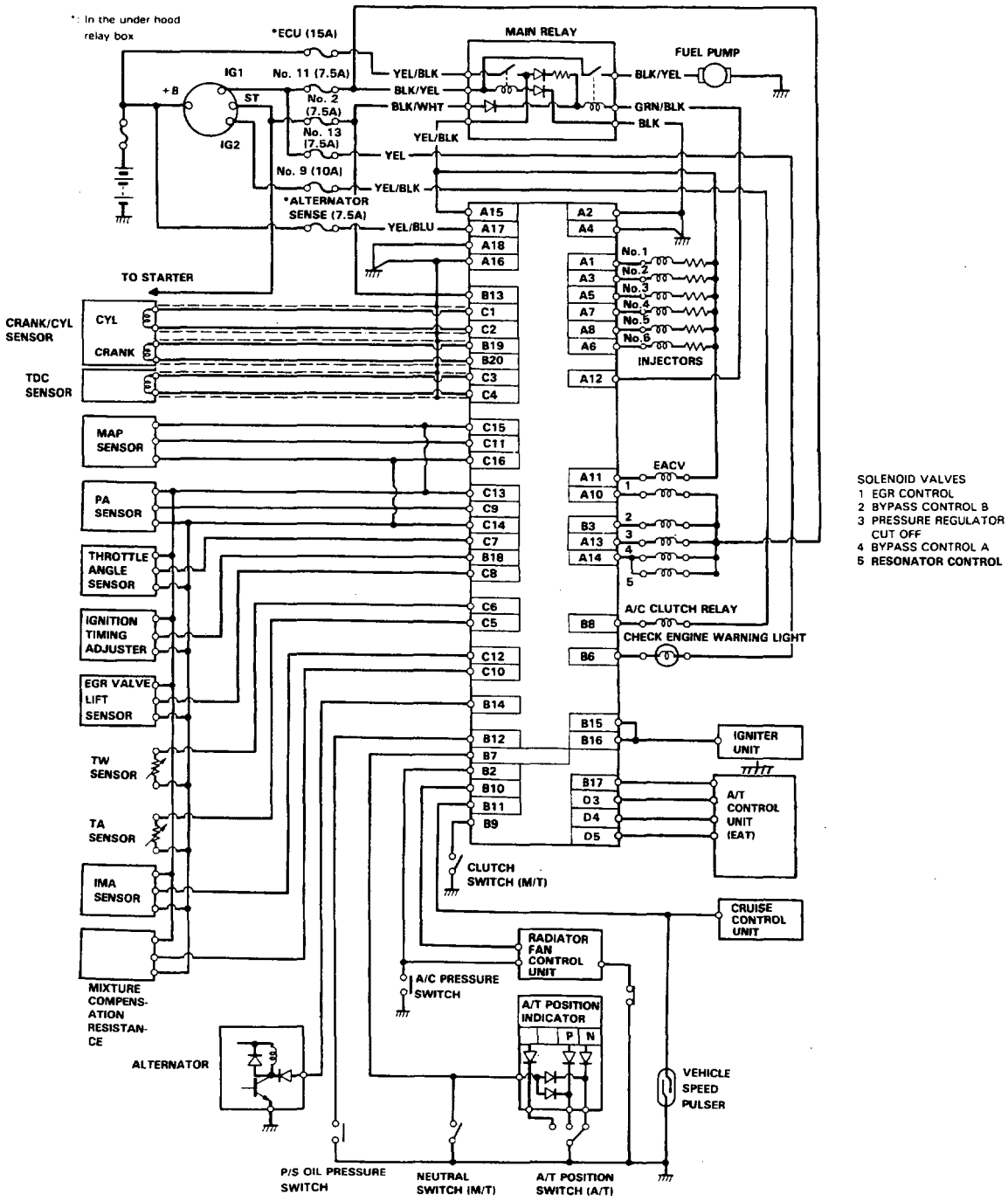

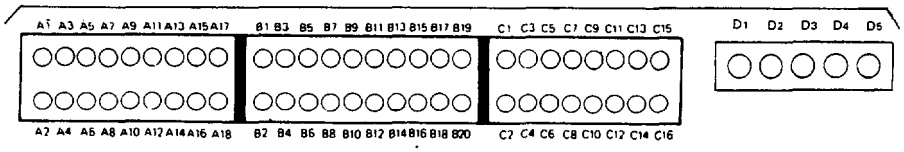

TERMINAL LOCATION

KQ

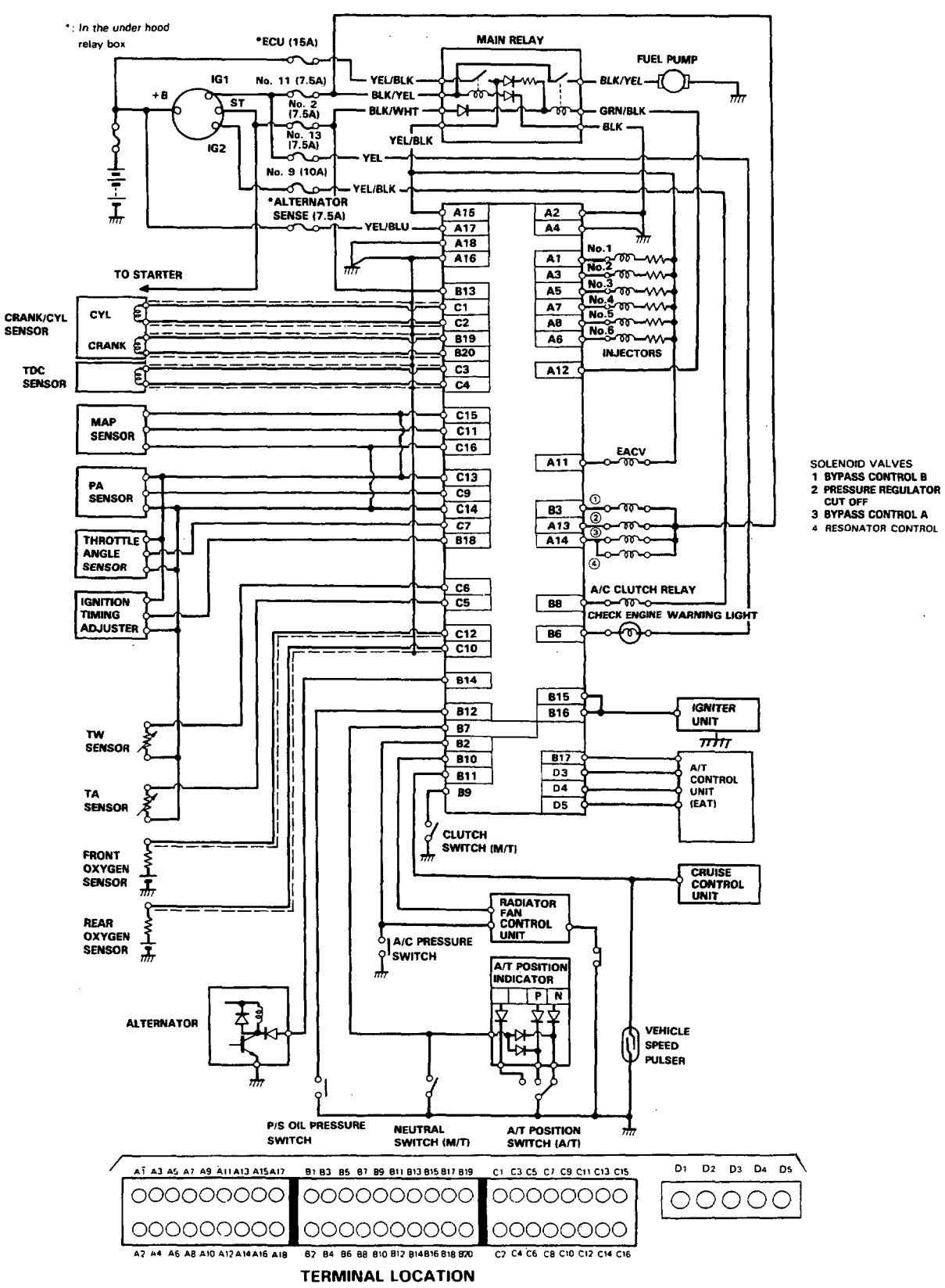

TERMINAL LOCATION

Symptom-to-System Chart

NOTE: Across each row in the chart, the systems that could be sources of a symptom are ranked in the order they should be inspected starting with ①. Find the symptom in the left column, read across to the most likely source, then refer to the page listed at the top of that column. If inspection shows the system is OK, try the next most likely system ②, etc.

PAGE / SYSTEM / SYMPTOM		PGM-FI								
		ELEC-TRONIC CONTROL UNIT	OXYGEN SENSOR (KG, KX, KQ)	MIXTURE COMPENSATION RESISTANCE (Except KG, KX, KQ)	MANIFOLD ABSOLUTE PRESSURE SENSOR	CRANK/ CYL SENSOR	COOLANT TEMPERA TURE SENSOR	THROTTLE ANGLE SENSOR	TDC SENSOR	INTAKE AIR TEMPERA-TURE SENSOR
		–	–	–	–	–	10	12	–	–
CHECK ENGINE WARNING LIGHT TURNS ON		▭ or ▭	▭	▭	▭	▭	▭	▭	▭	▭
SELF-DIAGNOSIS INDICATOR (RED LED) BLINKS		⓪ or ✱	① or ②	②	③ or ⑤	④ or ⑨	⑥	⑦	⑧	⑩
ENGINE WON'T START		②			③		③			
DIFFICULT TO START ENGINE WHEN COLD		BU			③		①			
IRREGULAR IDLING	WHEN COLD FAST IDLE OUT OF SPECIFIC	BU					③			
	ROUGH IDLE	BU		③	②					
	WHEN WARM ENGINE SPEED TOO HIGH	BU					③			
	WHEN WARM ENGINE SPEED TOO LOW	BU			③					
FREQUENT STALLING	WHILE WARMING UP	BU			③					
	AFTER WARMING UP	BU								
POOR PERFORM-ANCE	MISFIRE OR ROUGH RUNNING	BU		③	③					
	FAILS EMISSION TEST	BU	②	②	①		③			
	LOSS OF POWER	BU			②					

* If codes other than those listed above are indicated, count the number of blinks again. If the indicator is in fact blinking these codes, substitute a known-good ECU and recheck. If the indication goes away, replace the original ECU.

BU: When the Check engine warning light and the self-diagnosis indicator are on, the back-up system is in operation. Substitute a known-good ECU and recheck. If the indication goes away, replace the original ECU.

NOTE: If there is abnormal air intake noise, check the resonator control system.

PGM-FI							IDLE CONTROL				EMISSION CONTROL	
IMA SENSOR (Except KG,KX,KQ)	ATMO-SPHERIC PRESSURE SENSOR	IGNITION OUTPUT SIGNAL	VEHICLE SPEED PULSER	IGNITION TIMING ADJUSTER	A/T FI SIGNAL A	A/T FI SIGNAL B	ELECTRONIC AIR CONTROL VALVE	OTHER IDLE CONTROLS	FUEL SUPPLY	AIR INTAKE	EGR CONTROL SYSTEM (Except KQ)	OTHER EMISSION CONTROLS
–	–	–	–	–	14	16	–	–	–	–	–	–
11	13	15	17	18	30	31	14				12	
	3	3							1			
									2			
							2	1				
3							1				3	3
							1	2				3
							1	3			2	
							1		2		3	
							2		3		1	
3							2		1		3	
2												2
									1	3		2

Troubleshooting Procedures

When the Check engine warning light has been reported on, turn the ignition on, pull down the passenger's side carpet from under the dashboard and observe the LED on the top of the ECU. The Red LED indicates a system failure code by blinking frequency. (The Yellow LED is for idle speed adjustment and is not related to the following troubleshooting codes.)

The ECU LED can indicate any number of simultaneous component problems by blinking separate codes, one after another. Problem codes 1 through 9 are indicated by individual short blinks. Problem codes 10 through 31 are indicated by a series of long and short blinks. One long blink equals 10 short blinks. Add the long and short blinks together to determine the problem code.

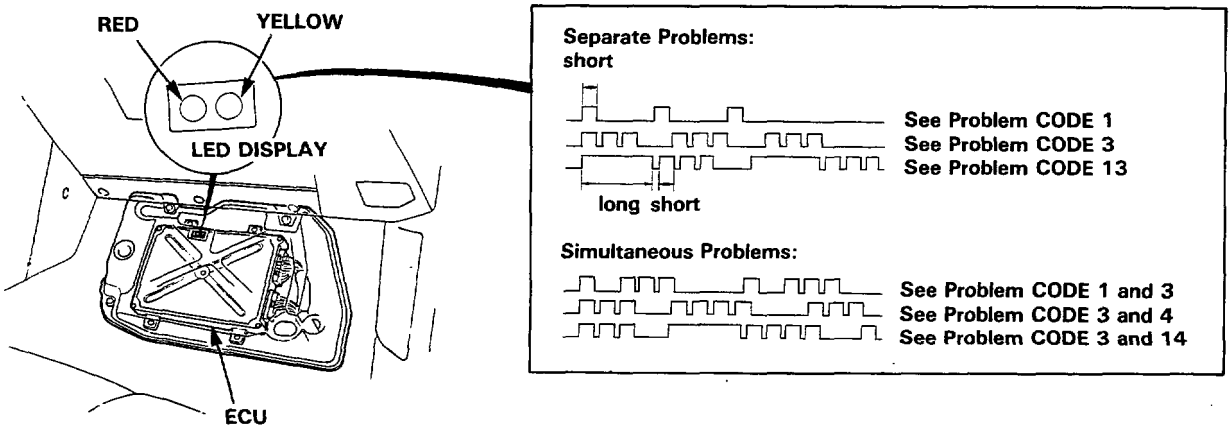

SELF-DIAGNOSIS INDICATOR BLINKS	SYSTEM INDICATED	PAGE
0	ECU	—
1	FRONT OXYGEN CONTENT (KG, KX, KQ)	—
2	REAR OXYGEN CONTENT (KG, KX, KQ)	—
	MIXTURE COMPENSATION RESISTANCE (Except KG, KX, KQ)	—
3	MANIFOLD ABSOLUTE PRESSURE	—
5		—
4	CRANK ANGLE	—
6	COOLANT TEMPERATURE	6-10
7	THROTTLE ANGLE	6-12
8	TDC POSITION	—
9	No. 1 CYLINDER POSITION	—
10	INTAKE AIR TEMPERATURE	—
11	IMA (Except KG, KX, KQ)	—
12	EXHAUST GAS RECIRCULATIONS SYSTEM (Except KQ)	—
13	ATMOSPHERIC PRESSURE	—
14	ELECTRONIC IDLE CONTROL	—
15	IGNITION OUTPUT SIGNAL	—
17	VEHICLE SPEED PULSER	—
18	IGNITION TIMING ADJUSTMENT	—
30	A/T FI SIGNAL A	6-14
31	A/T FI SIGNAL B	6-16

- If codes other than those listed above are indicated, count the number of blinks again, if the indicator is in fact blinking these codes, substitute a known-good ECU and recheck. If the indication goes away, replace the original ECU. The Check Engine dash warning light and ECU Red LED may come on, indicating a system problem, when, in fact, there is a poor or intermittent electrical connection. First, check the electrical connections, clean or repair connections if necessary.
- The Check Engine warning light and S warning light may light simultaneously when the self-diagnosis indicator blinks 6, 7 and 17. Check the PGM-FI system according to the PGM-FI control system troubleshooting, then recheck the S warning light. If it lights, see section 9.
- The Check Engine warning light does not come on when there is a malfunction in the A/T FI signal. However, the ECU LED will indicate the codes.

If the inspection for a particular failure code requires the test harness, remove the right door sill molding, the small cover on the right kick panel, and pull the carpet back to expose the ECU. Unbolt the ECU bracket and disconnect the 7P connector from the Cooling Fan Timer Unit near the upper left corner of the ECU bracket. Connect the test harness. Then check the system according to the procedure described for the appropriate code(s) listed on the following pages.

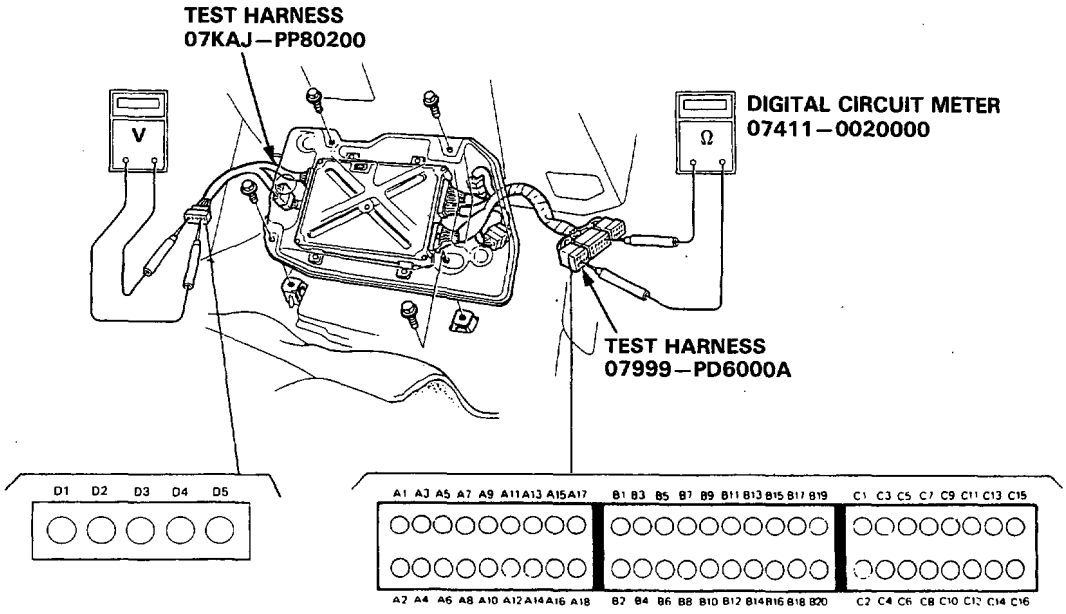

TERMINAL LOCATION

CAUTION :

- Puncturing the insulation on a wire can cause poor or intermittent electrical connections.
- **For testing at connectors other than the test harness, bring the tester probe into contact with the terminal from the connector side of wire harness connectors in the engine compartment. For female connectors, just touch lightly with the tester probe and do not insert the probe.**

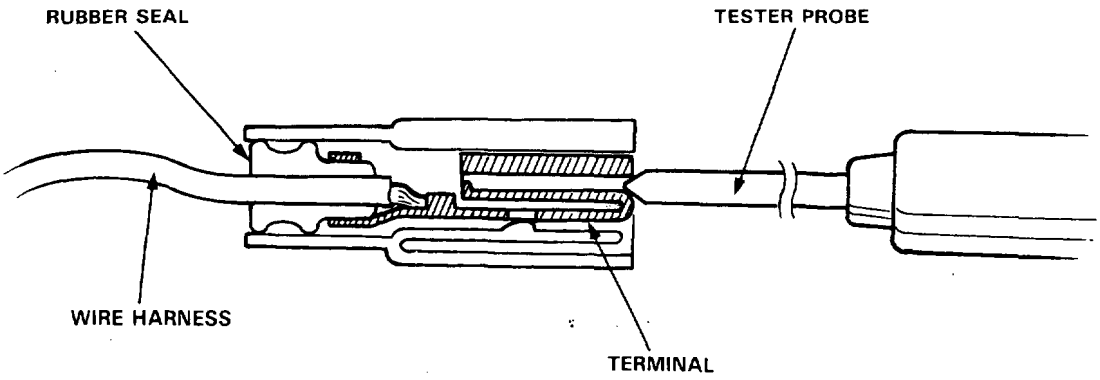

Troubleshooting Flowchart — TW Sensor

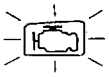

Self-diagnosis Red LED indicates code 6: Most likely a problem in the Coolant Temperature (TW) Sensor circuit.

- **Check Engine warning light has been reported on.**
- **Red LED indicates CODE 6.**

Turn the ignition switch OFF.

Remove ALTERNATOR SENSE fuse in the under-hood relay box for 10 seconds to reset ECU.

Turn the ignition switch ON.

Is Check Engine warning light on and does LED indicate CODE 6?

NO → **Intermittent failure, system is OK at this time. (Test drive may be necessary.) Check for poor connections or loose wires at TW sensor and RED/WHT wire at C303—C103 (RH: C29—C30) and GRN/WHT at C305—C102 (RH: C32—C31) at the right shock tower.**

YES

Turn the ignition switch OFF.

Connect the ECU test harness between the ECU and connector (page 6-9).

Warm up engine to normal operating temperature (cooling fan comes on).

Turn the ignition switch OFF.

Disconnect "C" connector from ECU only, not the main wire harness.

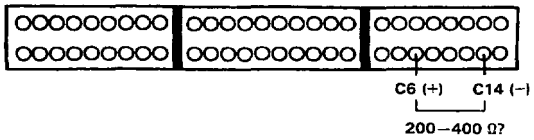

Measure resistasnce between C6 terminal and C14 terminal.

Is there 200—400 Ω?

NO → **Inspect for an open circuit in GRN/WHT wire between ECU (C14) and TW sensor or open circuit in RED/WHT wire between ECU (C6) and TW sensor. If wires are OK, replace TW sensor.**

YES

Reconnect "C" connector to ECU and disconnect "C" connector from main wire harness.

(To page 6-11)

(From page 6-10)

Turn the ignition switch ON.

Measure voltage between C6 (+) terminal and C14 (−) terminal.

Is there approx. 5 V?

NO → **Substitute a known-good ECU and re-check. If prescribed voltage is now available, replace the original ECU.**

YES

Turn the ignition switch OFF.

Reconnect "C" connector to main wire harness.

Turn the ignition switch ON.

Measure voltage between C6 (+) terminal and C14 (−) terminal.

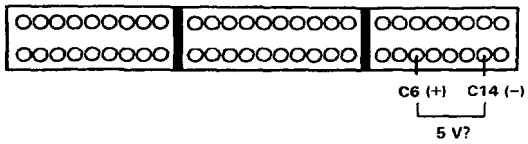

Is there less than 0.50 V?

NO

Substitute a known-good ECU and recheck. If symptom/indication goes away, replace the original ECU.

YES

A/T ONLY

Disconnect "22P" connector from A/T control unit.

Is there less than 0.50 V?

NO → Replace A/T control unit.

YES

Repair short in RED/WHT wire between ECU (C6) and TW sensor.

Troubleshooting Flowchart — Throttle Angle Sensor

Self-diagnosis Red LED indicates code 7: Most likely a problem in the Throttle Angle Sensor circuit.

- **Engine is running.**
- **Check Engine warning light has been reported on.**
- **Red LED indicates CODE 7.**

Turn the ignition switch OFF.

Remove ALTERNATOR SENSE fuse in the under-hood relay box for 10 seconds to reset ECU.

Start engine.

Is Check Engine warning light on and does LED indicate CODE 7?

NO → **Intermittent failure, system is OK at this time. (Test drive may be necessary.) Check for poor connections or loose wires at the throttle angle sensor and GRN/WHT wire at C305–C102 (RH: C32–C31) and YEL/WHT wires at C303–C103 (RH: C29–C30) at the right shock tower.**

YES

Turn the ignition switch OFF.

Connect the test harness between the throttle angle sensor and wire harness.

Turn the ignition switch ON.

Measure voltage between RED (+) terminal and GRN (–) terminal.

Is there approx. 5V?

NO → Measure voltage between RED (+) terminal and body ground.

Is there approx. 5V?

YES → **Repair open in GRN/WHT wire between ECU (C14) and throttle angle sensor.**

NO

Turn the ignition switch OFF.

Connect the ECU test harness between the ECU and connector (page 6-9).

(To page 6-13)

YES

Measure voltage between WHT (+) terminal and GRN (–) terminal at wide open throttle.

(To page 6-13)

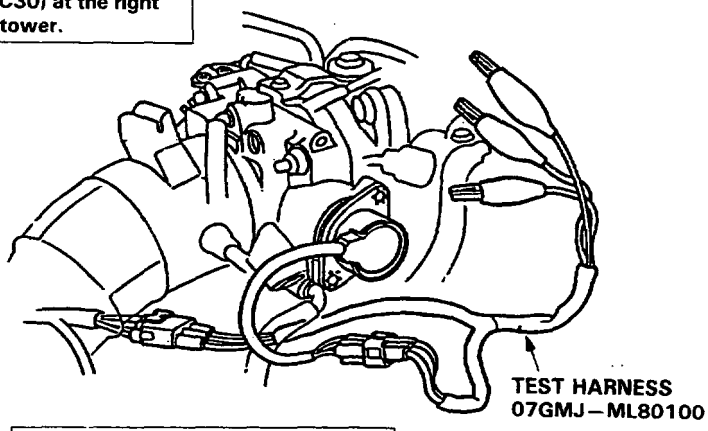

(From page 6-12)

Is there approx. 4 V?

NO

- **Replace throttle angle sensor.**
- **Repair short in RED/YEL wire between ECU (C7) and throttle angle sensor.**
- **Replace A/T control unit.**

YES

Turn the ignition switch OFF.

Connect the ECU test harness between the ECU and connector (page 6-9).

Turn the ignition switch ON.

Measure voltage between C7 (+) terminal and C14 (−) terminal at wide open throttle.

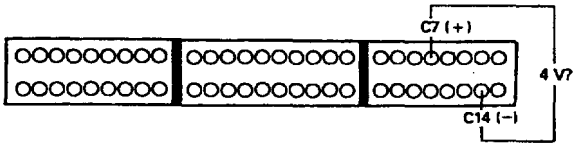

Is there approx. 4 V?

NO

Repair open in RED/YEL wire between ECU (C7) and throttle angle sensor.

YES

Substitute a known-good ECU and recheck. If symptom/indication goes away, replace the original ECU.

(From page 6-12)

Turn the ignition switch ON.

Measure voltage between C13 (+) terminal and C14 (−) terminal.

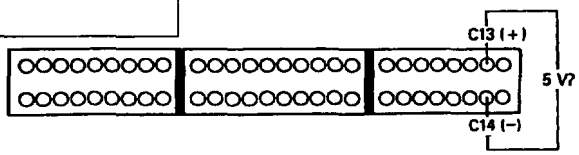

Is there approx. 5 V?

YES

Repair open in YEL/WHT wire between ECU (C13) and throttle angle sensor.

NO

Substitute a known-good ECU and recheck. If prescribed voltage is now available, replace the original ECU.

Troubleshooting Flowchart — A/T FI Signal A

Self-diagnosis LED indicates code 30: A problem in the line (B7) of between A/T control unit and PGM-FI ECU.

Self-diagnosis LED indicates code 31: A problem in the line (B15) of between A/T control unit and PGM-FI ECU.

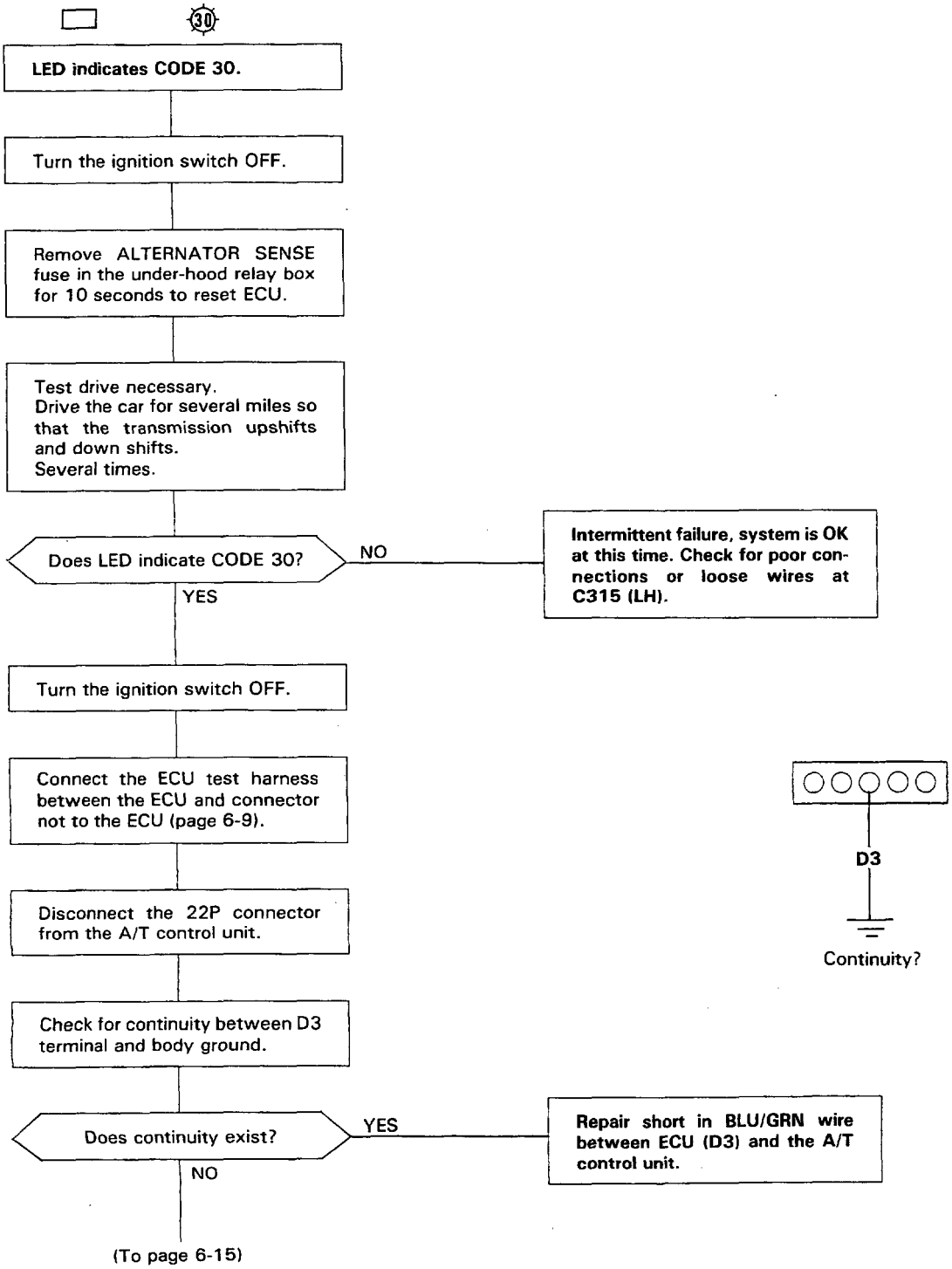

(from page 6-14)

Check for Continuity BLU/GRN wire between D3 and 22P connector of the A/T control unit.

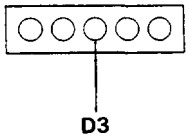

Does continuity exist?

NO → **Repair open in BLU/GRN wire between ECU (D3) and the A/T control unit.**

YES → **Substitute a known-good ECU and recheck. If symptom/indication goes away, replace the original ECU.**

Troubleshooting Flowchart — A/T FI Signal B

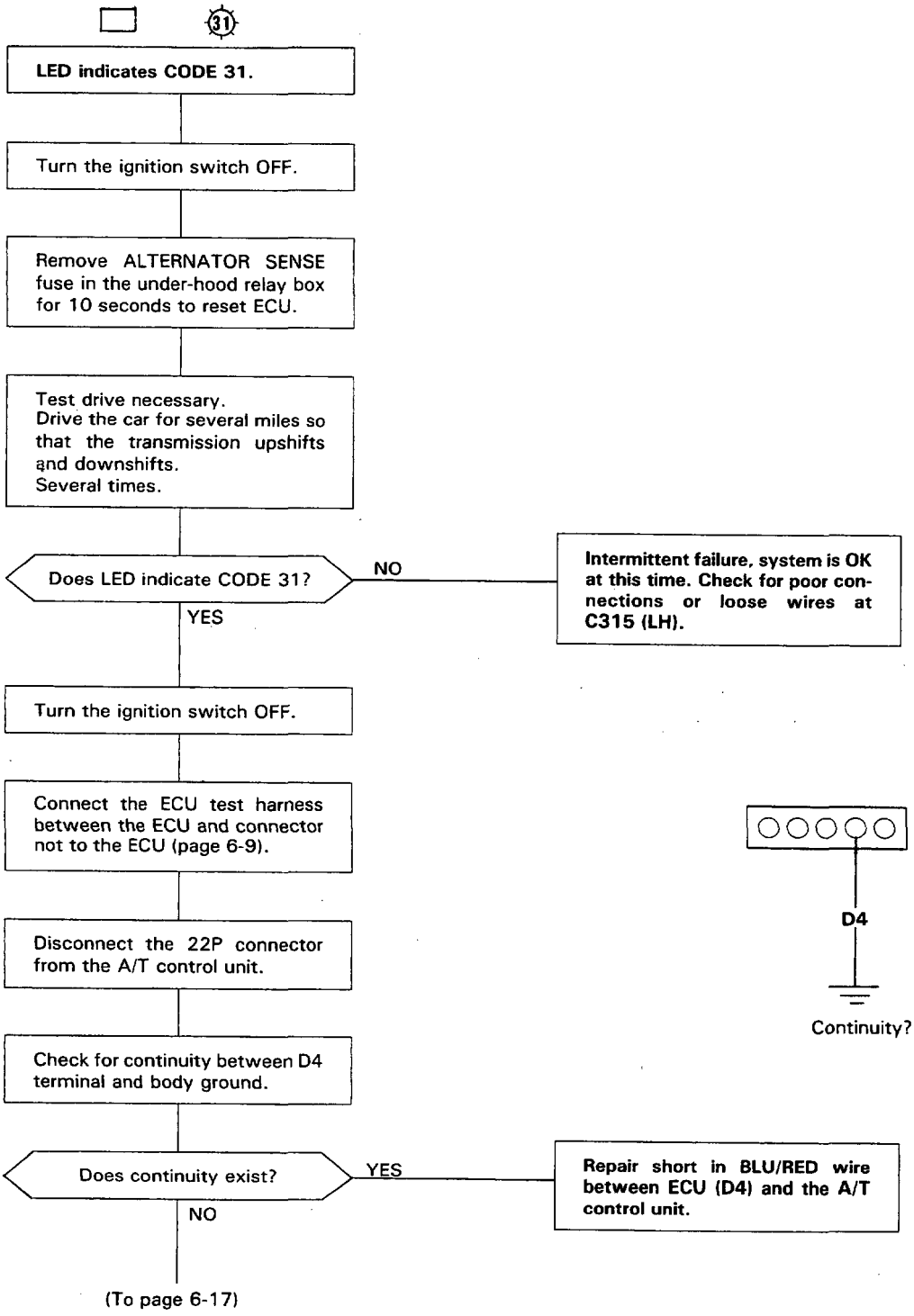

(from page 6-16)

Check for Continuity BLU/RED wire between D4 and 22P connector of the A/T control unit.

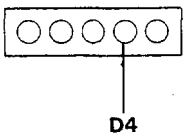

Does continuity exist?

NO

Repair open in BLU/RED wire between ECU (D4) and the A/T control unit.

YES

Substitute a known-good ECU and recheck. If symptom/indication goes away, replace the original ECU.

Idle Speed

Inspection/Adjustment

1. Start the engine and warm it up to normal operating temperature (the cooling fan comes on).

2. Connect a tachometer.

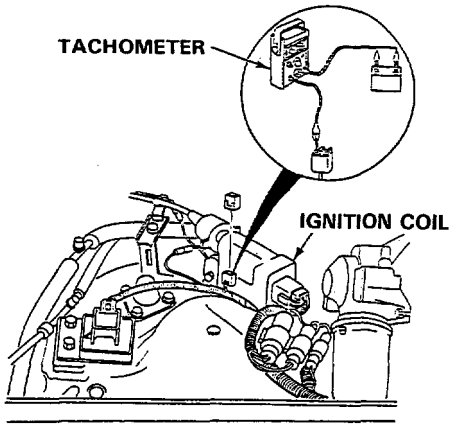

3. Set the steering in the straight forward condition, and check idling in no-load conditions in which the headlights, blower fan, rear defroster, cooling fan, and air conditioner are not operating.

Idle speed should be:

KG, KX

Manual	680 ± 50 min^{-1} (rpm)
Automatic	680 ± 50 min^{-1} (rpm) (in N or P)

KB, KE, KF, KQ

Manual	720 ± 50 min^{-1} (rpm)
Automatic	680 ± 50 min^{-1} (rpm) (in D) and 720 ± 50 min^{-1} (rpm) (in N or P)

4. Check the Yellow LED display at the ECU under the passenger's seat.

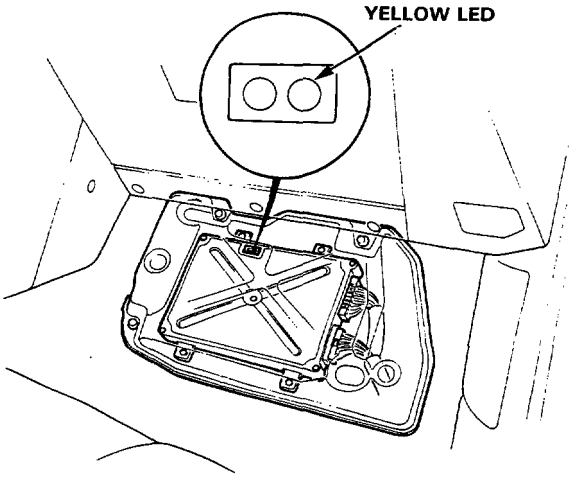

- If Yellow LED is off
  Do not adjust idle adjusting screw.
- If Yellow LED is blinking
  Adjust idle adjusting screw 1/4 turn clockwise.
- If Yellow LED is on
  Adjust idle adjusting screw 1/4 turn counter-clockwise.

NOTE: On a new engine (less than 310 miles or 500 km) the Yellow LED may light even though the idle adjusting screw is properly set. However, no adjustment should be made.

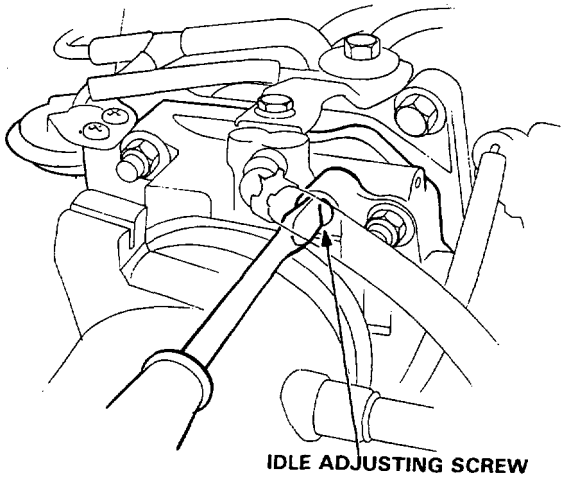

– Check that the Yellow LED goes off after approximately 30 seconds.
  If it does not go off, rotate the idle adjusting screw by 1/4 turn in the same direction, and repeat the same operation until the Yellow LED goes off.

5. Check the idle speed in the following conditions.
   - With headlights (Hi) and rear window defogger ON.
   - While the steering wheel is turning.
   - With air conditioner compressor on.
   - If, applicable, with Automatic transmission model when shifted in gear (except N or P).

   Idle should remain stable at: 800 ± 50 min^{-1} (rpm)

Component Location

LHD:

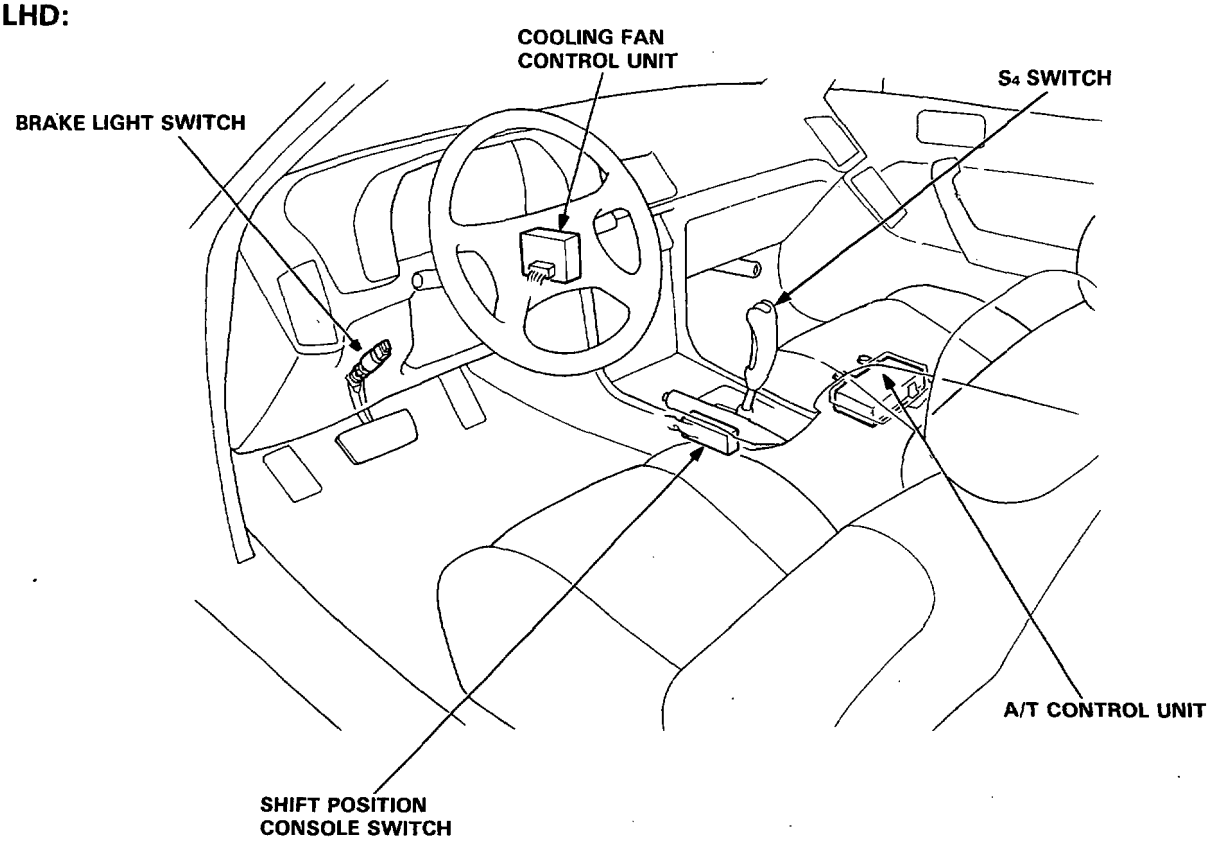

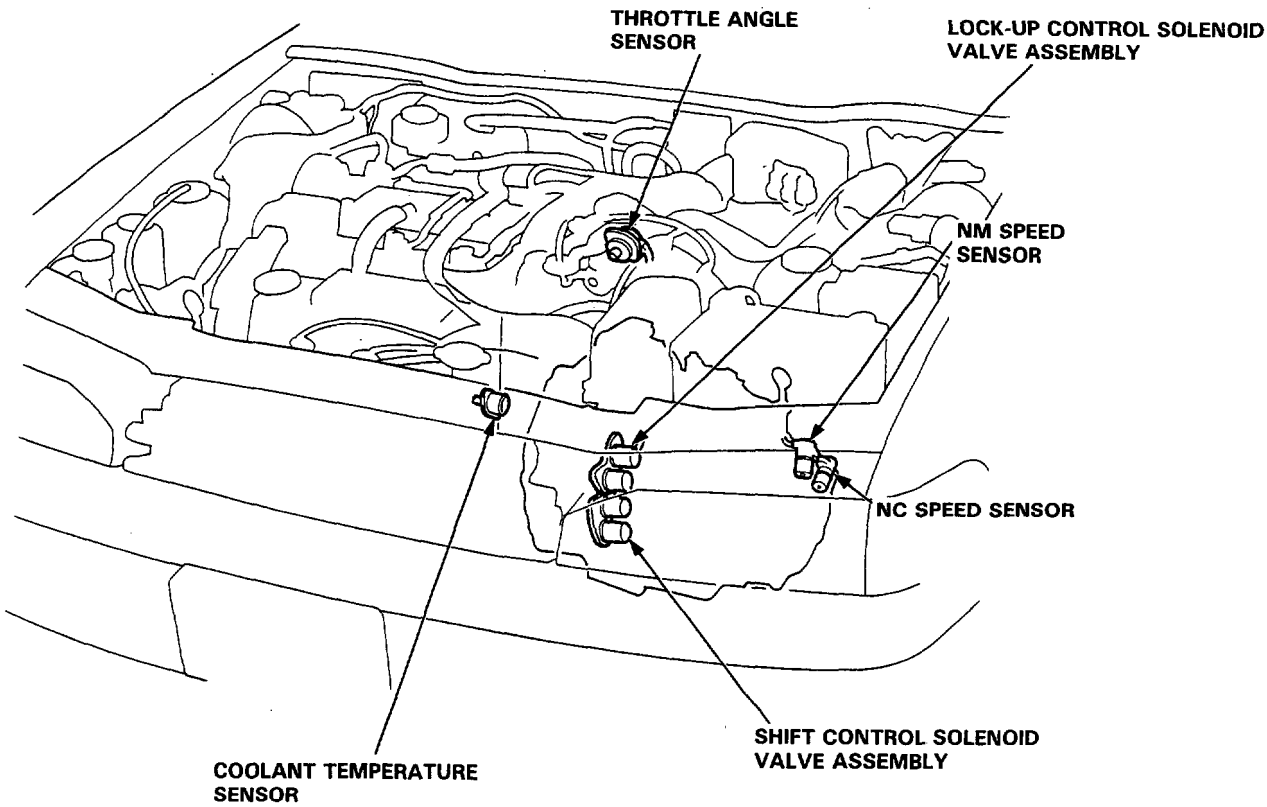

RHD:

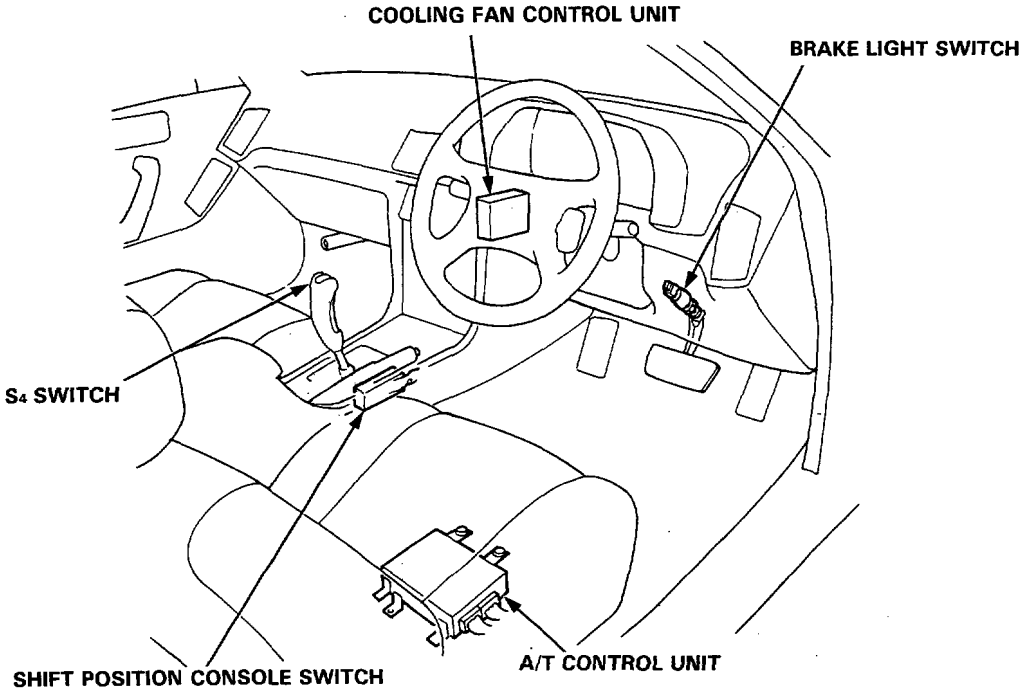
COOLING FAN CONTROL UNIT
BRAKE LIGHT SWITCH
S4 SWITCH
SHIFT POSITION CONSOLE SWITCH
A/T CONTROL UNIT

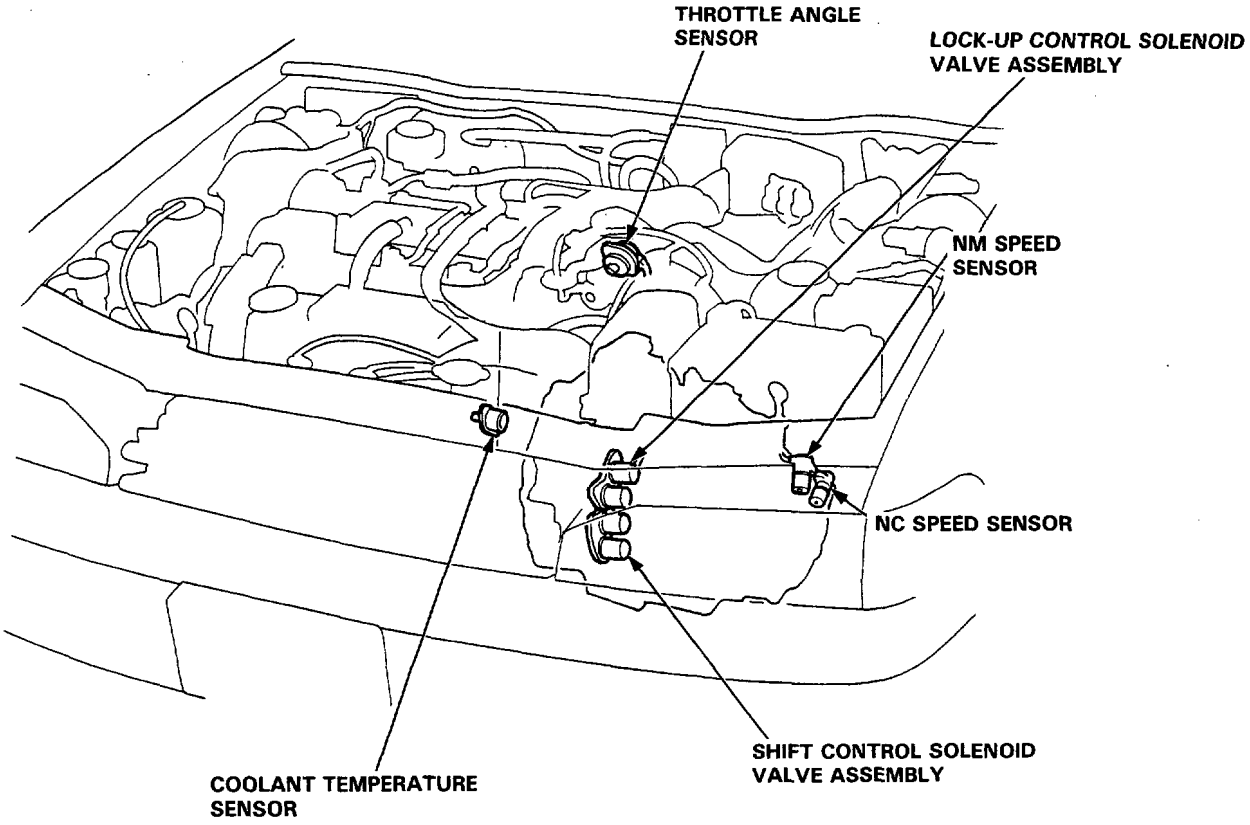
THROTTLE ANGLE SENSOR
LOCK-UP CONTROL SOLENOID VALVE ASSEMBLY
NM SPEED SENSOR
NC SPEED SENSOR
SHIFT CONTROL SOLENOID VALVE ASSEMBLY
COOLANT TEMPERATURE SENSOR

A/T Control Unit

Circuit Diagram

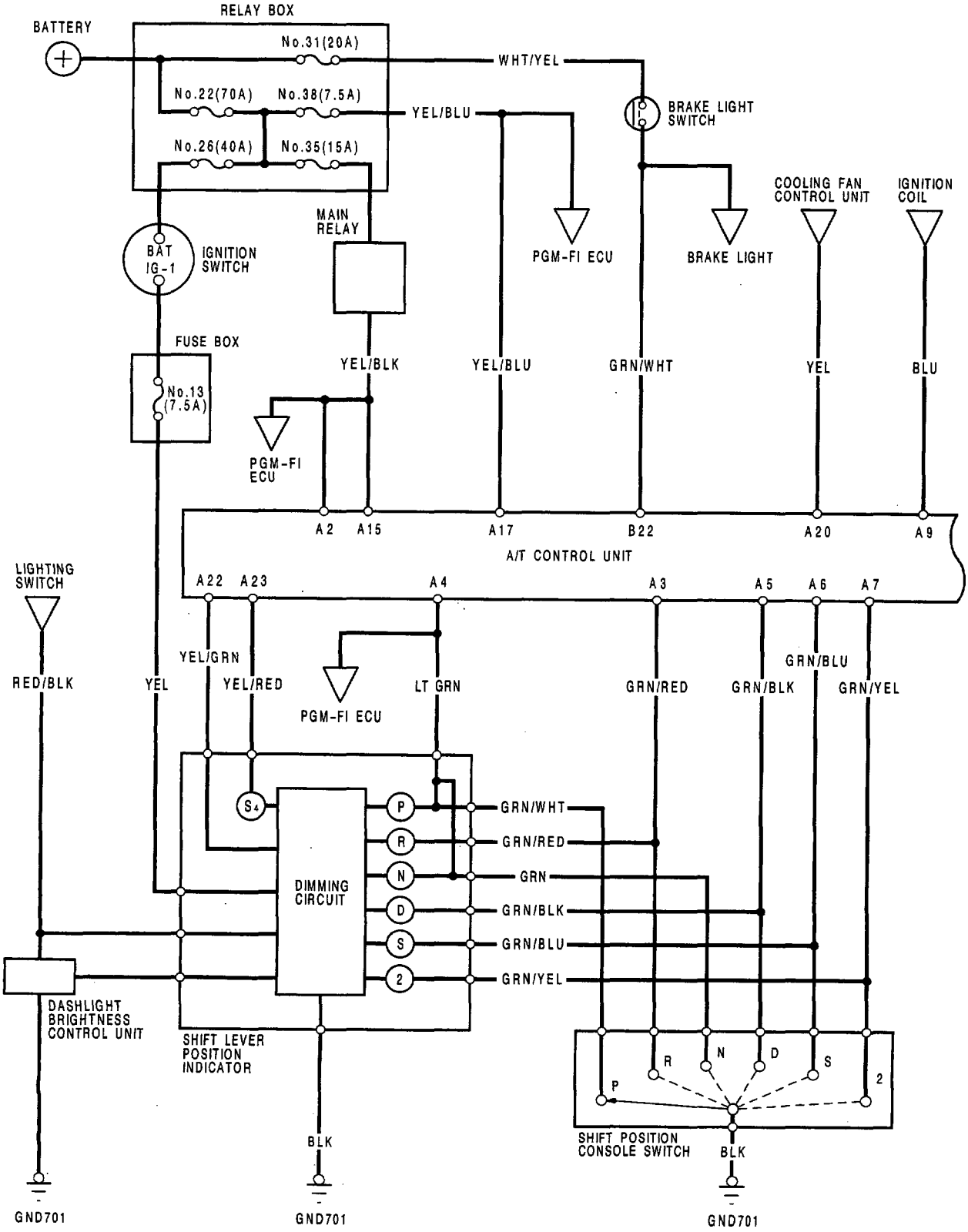

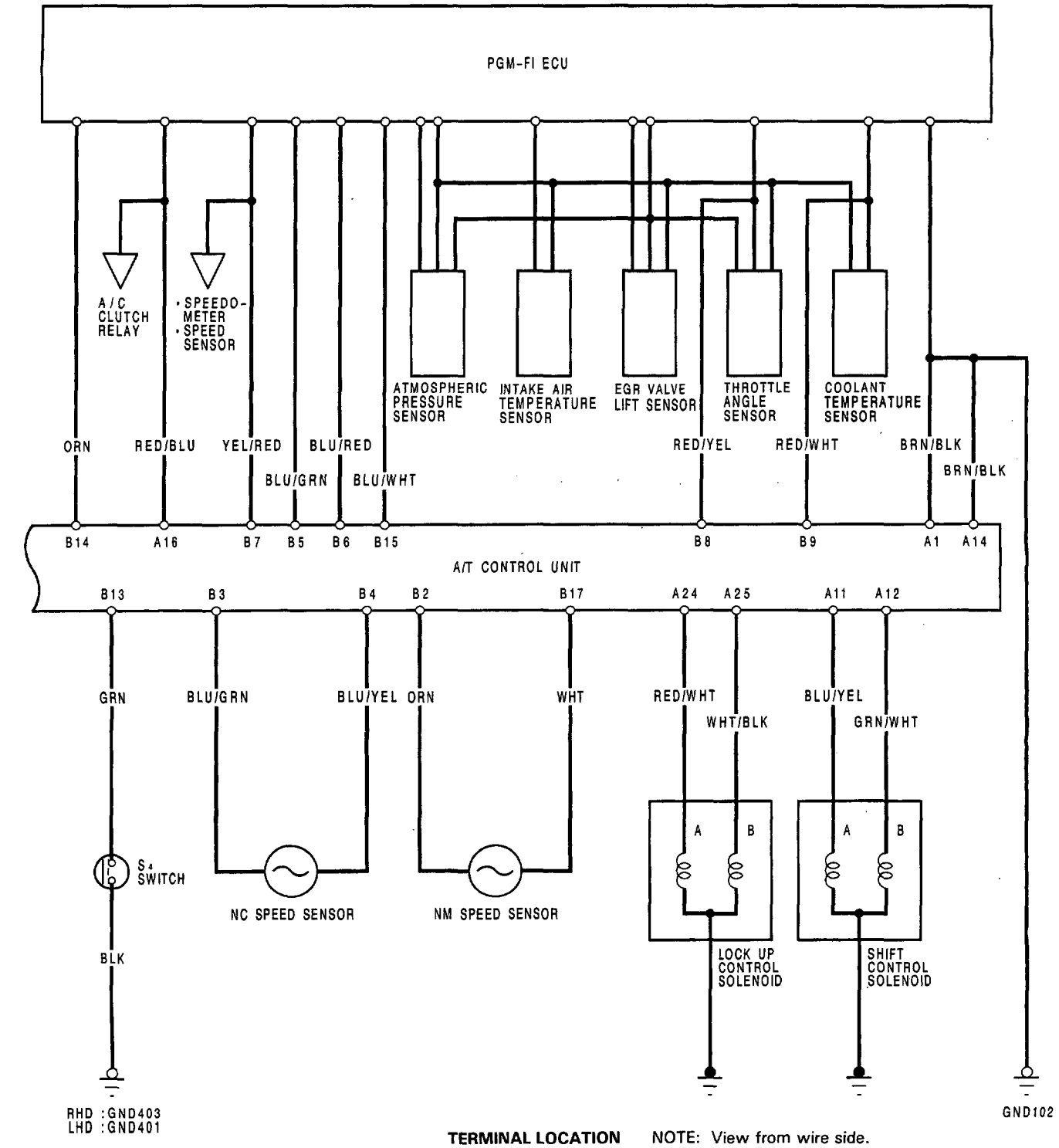

TERMINAL LOCATION NOTE: View from wire side.

	A12	A11		A9		A7	A6	A5	A4	A3	A2	A1
	A25	A24	A23	A22					A17	A16	A15	A14

		B9	B8	B7	B6	B5	B4	B3	B2	
B22					B17		B15	B14	B13	

Troubleshooting Procedures

The A/T Control Unit has a built-in self-diagnosis function. The S_4 indicator light in the gauge assembly and LED display on the A/T control unit blink when the A/T control unit senses an abnormality in the input or output systems. The number of blinks from the LED display varies according to the problem, which can be diagnosed by counting the number of blinks.

For problem diagnosis count the number of blinks from the LED display as shown on the Symptom-to-Component Chart on page 9-15. If no abnormality is found from your inspection, refer to the hydraulic system Symptom-to-Component Chart on page 9-30.

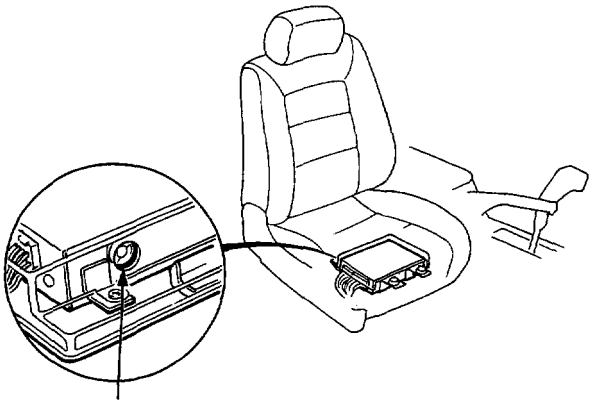

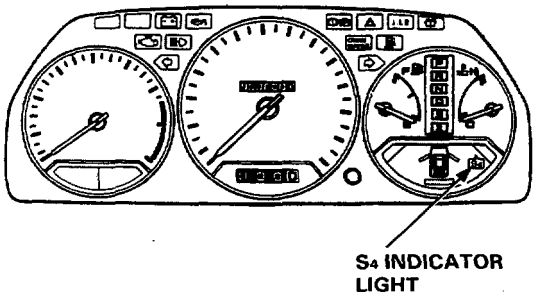

When the ignition switch is turned ON, the S_4 indicator light comes on for about two seconds regardless of whether there is a problem. The S_4 indicator light will also come on when in S_4 mode.

If there is a system problem, the S_4 indicator light will corne on and continue to blink until the ignition key is turned OFF. When the ignition key is turned ON again, the S_4 indicator light will not blink again for the original problem. But if the A/T control unit senses the original abnormality again with ignition switch ON, the S_4 indicator light will blink again for the original problem. Therefore, even though the S_4 indicator light does not come on when turning the ignition key ON, check the LED display for automatic transmission problem diagnosis.

Since the LED problem code is retained in memory, it will blink again whenever the ignition key is turned on. If the LED problem code is not memorized, check the following causes:

- Check the Alternator Sense fuse (7.5A) in the under-hood relay box.
- Check for an open circuit in the YEL/BLU wire between the Alternator Sense fuse (7.5A) and A/T control unit A17 terminal.

After making repair, disconnect the Alternator Sense fuse (7.5A) in the under-hood relay box for more than ten seconds to reset LED display memory.

Symptom-to-Component Chart

Electrical System

Number of LED display blinks	S_4 indicator light	Possible Cause	Symptom	Refer to page
1	Blinks	• Disconnected lock-up control solenoid valve A coupler • Short or open in lock-up control solenoid valve A wire • Faulty lock-up control solenoid valve A	• Lock-up clutch does not engage. • Lock-up clutch does not disengage. • Frequent engine stalling.	9-9
2	Blinks	• Disconnected lock-up control solenoid valve B coupler • Short or open in lock-up control solenoid valve B wire • Faulty lock-up control solenoid valve B	• Lock-up clutch does not engage.	9-10
3	Blinks or OFF	• Disconnected throttle angle sensor coupler • Short or open in throttle angle sensor wire • Faulty throttle angle sensor	• Lock-up clutch does not engage.	9-11
4	Blinks	• Disconnected pulser coupler • Short of open in speed pulser wire • Faulty speed pulser	• Lock-up clutch does not engage.	9-12 9-13
5	Blinks	• Short in shift position console switch wire • Faulty shift position console switch	• Fails to shift other than 2nd ⟷ 4th gears. • Lock-up clutch does not engage.	9-14
6	OFF	• Disconnected shift position console switch coupler • Open in shift position console switch wire • Faulty shift position console switch	• Fails to shift other than 2nd ⟷ 4th gears. • Lock-up clutch does not engage. • Lock-up clutch engages and disengages alternately.	9-16
7	Blinks	• Disconnected shift control solenoid valve A coupler • Short or open in shift control solenoid valve A wire • Faulty shift control solenoid valve A	• Fails to shift (between 1st ⟷ 4th, 2nd ⟷ 4th or 2nd ⟷ 3rd gears only). • Fails to shift (stuck in 4th gear)	9-18
8	Blinks	• Disconnected shift control solenoid valve B coupler • Short or open in shift control solenoid valve B wire • Faulty shift control solenoid valve B	• Fails to shift (stuck in 1st or 4th gears).	9-19

(cont'd)

Symptom-to-Component Chart

Electrical System (cont'd)

Number of LED display blinks	S_4 indicator light	Possible Cause	Symptom	Refer to page
9	Blinks	• Disconnected NC speed sensor coupler • Short or open in the NC speed sensor wire • Faulty NC speed sensor	• Lock-up clutch does not engage.	9-20
10	Blinks	• Disconnected water temperature sensor coupler • Short or open in the water temperature sensor wire • Faulty water temperature sensor	• Lock-up clutch does not engage.	9-21
11	OFF	• Disconnected ignition coil coupler • Short or open in ignition coil wire • Faulty ignition coil	• Lock-up clutch does not engage.	9-22
12	OFF	• Short in cooling fan control unit wire • Faulty cooling fan control unit	• Lock-up clutch does not disengage.	9-23
14	OFF	• Short or open in FAS wire • Trouble in PGM-FI ECU	• Transmission jerks hard when shifting.	9-24
15	OFF	• Disconnected NM speed sensor coupler • Short of open in NM speed sensor wire • Faulty NM speed sensor	• Transmission jerks hard when shifting.	9-26

Brake Light Signal Inspection 9-28
A/C Signal Inspection 9-29
S_4 Switch Signal Inspection 9-30

- If a customer describes the symptoms for codes 3, 6, or 11, yet the LED is not blinking, it will be necessary to recreate the symptom by test driving, and then checking the LED with the ignition still ON.
- If the LED displays codes other than those listed above or stays lit continuously, the control unit is faulty.
- Sometimes the S_4 indicator light and the Check Engine warning light may come on simultaneously. If so, check the PGM-FI system according to the number of blinks on the PGM-FI ECU self-diagnosing indicator, then reset the memory by removing the Clock fuse in the dash fuse box for more than 10 seconds. Drive the vehicle for several minutes at speed over 30 mph (50 km/h), then recheck the lights.

Troubleshooting Flowchart

Self-diagnosis LED indicator *blinks once.*

Disconnect the 26P connector from the control unit.

Turn the ignition switch ON.

Measure the voltage between the A24 (RED/WHT) and A1 (BRN/BLK) terminals.

Is there voltage?

YES → **Repair short to power source in RED/WHT wire between the A24 terminal and the lock-up control solenoid valve A.**

NO

Turn the ignition switch OFF.

Disconnect the 2P connector from the lock-up control solenoid valve assembly.

Check for continuity between the A24 (RED/WHT) and A1 (BRN/BLK) terminals.

Is there continuity?

YES → **Repair short to ground in RED/WHT wire between the A24 terminal and the lock-up control solenoid valve A.**

NO

Connect the 2P connector to the lock-up control solenoid valve assembly.

Measure the resistance between the A24 (RED/WHT) and A1 (BRN/ BLK) terminals.

Is the resistance 12–24 Ω?

NO → **Check for open in RED/WHT wire between the A24 terminal and the lock-up control solenoid valve A. If wire is OK, check the Lock-up Control Solenoid Valve A.**

YES

Check for loose control unit connectors. If necessary, substitute a known-good control unit and recheck.

NOTE: View from wire side.

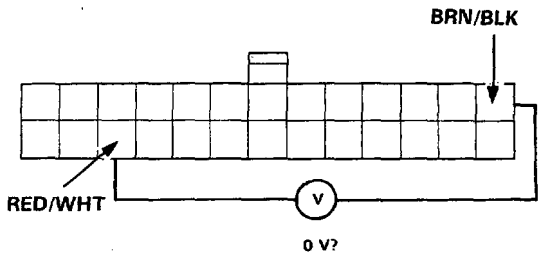

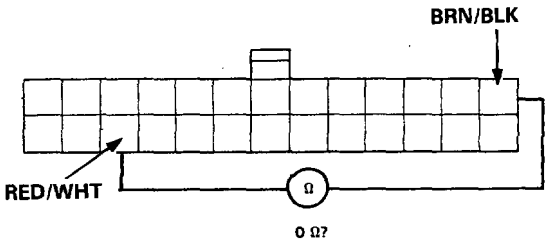

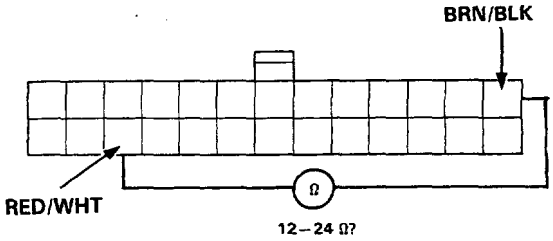

(cont'd)

Troubleshooting Flowchart (cont'd)

Self-diagnosis LED indicator blinks twice.

Disconnect the 26P connector from the control unit.

Turn the ignition switch ON.

Measure the voltage between the A25 (WHT/BLK) and A1 (BRN/BLK) terminals.

Is there voltage?

YES → **Repair short to power source in WHT/BLK wire between the A25 terminal and the lock-up control solenoid valve B.**

NO

Turn the ignition switch OFF.

Measure the resistance between the A25 (WHT/BLK) and A1 (BRN/BLK) terminals.

Is the resistance 12–24 Ω?

NO → **Check for open in WHT/BLK wire between the A25 terminal and the lock-up control solenoid valve B. If wire is OK, check the Lock-Up Control Solenoid Valve B.**

YES

Disconnect the 2P connector from the lock-up control solenoid valve assembly.

Check for continuity between the A25 (WHT/BLK) and A1 (BRN/BLK) terminals.

Is there continuity?

YES → **Repair short to ground in WHT/BLK wire between the A25 terminal and the lock-up control solenoid valve B.**

NO

Connect the 2P connector to the lock-up control solenoid valve assembly.

Check for loose control unit connectors. If necessary, substitute a known-good control unit and recheck.

NOTE: View from wire side.

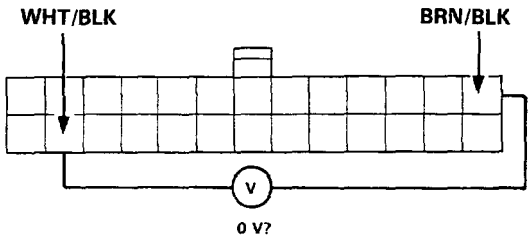

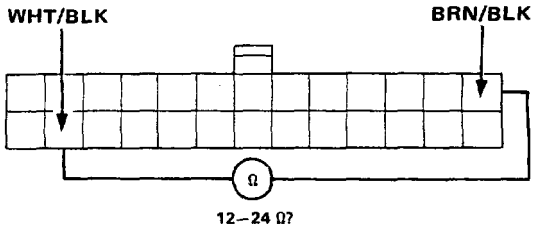

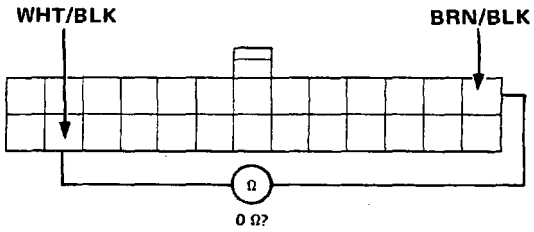

Self-diagnosis LED indicator blinks three times.

Turn the ignition switch ON.

Check whether the PGM-FI LED display blinks.

Does the LED blink? — YES → **Repair the PGM-FI System.**

NO

Turn the ignition switch OFF.

Disconnect the 26P and 22P connectors from the control unit.

Turn the ignition switch ON.

Measure the voltage between the B14 (ORN) and A1 (BRN/BLK) terminals.

Is the voltage 4.75–5.25 V? — NO → **Repair open or short in ORN wire between the B14 terminal and the D14 terminal of the PGM-FI ECU.**

YES

Turn the ignition switch OFF.

Connect the 26P and 22P connectors to the control unit.

Turn the ignition switch ON.

Measure the voltage between the B8 (RED/YEL) and A1 (BRN/BLK) terminals.

Is the voltage 0.44–0.56 V?* — NO → **Repair open or short in RED/YEL wire between the B8 terminal and the throttle angle sensor.**

YES * ± 10%

Check for loose control unit connectors. If necessary, substitute a known-good control unit and recheck.

NOTE: View from wire side.

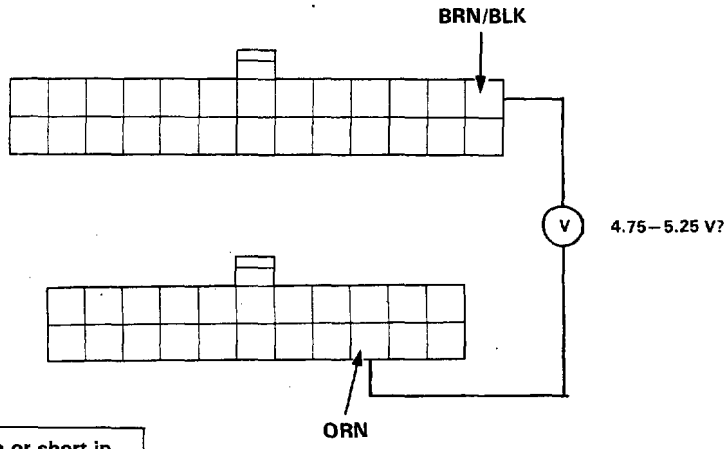

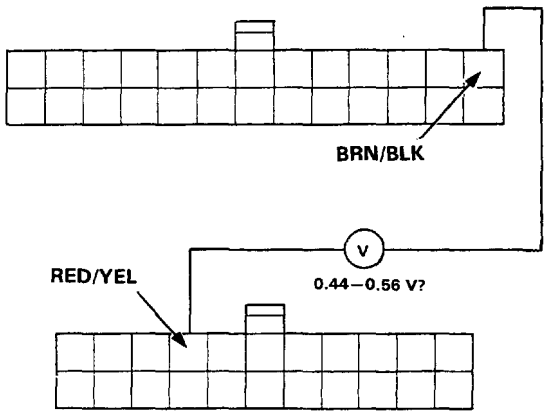

(cont'd)

Troubleshooting Flowchart (cont'd)

NOTE: For EC models

Self-diagnosis LED indicator blinks four times.

Jack up the front of the car and block one wheel.

Turn the ignition switch ON.

Rotate the front wheel and measure the voltage between the B7 (YEL/RED) and A1 (BRN/BLK) terminals.

Does the voltage 0—5 V appear alternately?

YES

Substitute a known-good control unit and recheck.

NO

Turn the ignition switch OFF.

Disconnect the 26P and 22P connectors from the control unit.

Rotate the front wheel and check for continuity between the A1 (BRN/BLK) and B7 (YEL/RED) terminals.

Do continuity and infinity alternately appear?

NO

Check for short or open in YEL/RED wire between the B7 terminal and the gauge assembly. If wire is OK, check the Speed Pulser.

YES

Check for loose control unit connectors. If necessary, substitute a known-good control unit and recheck.

⚠ WARNING

- **Set the parking brake securely and block the rear wheels.**
- **Jack up the front of the car and support with a rigid rack.**

NOTE: View from wire side.

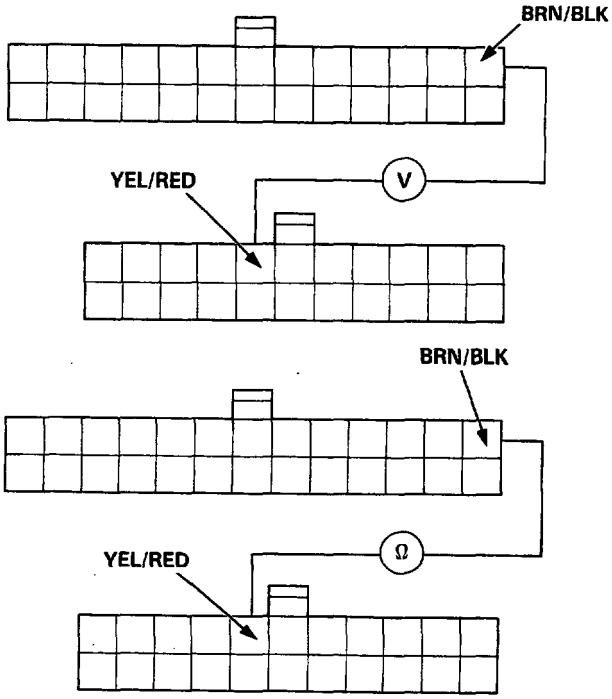

NOTE: Except EC models

Self-diagnosis LED indicator blinks four times.

Jack up the front of the car and block one wheel.

Shift transmission to [N].

WARNING

- **Set the parking brake securely and block the rear wheels.**
- **Jack up the front of the car and support with a rigid rack.**

Disconnect the 26P and 22P connectors from the control unit.

Turn the ignition switch ON.

Rotate the front wheel and check for voltage between the A1 (BRN/BLK) and B7 (YEL/RED) terminals.

Does the voltage 0—5 V appear alternately?

NO → **Check for short or open in YEL/RED wire between the B7 terminal and the Speed Sensor. If wire is OK, check the Speed Sensor.**

YES → **Check for loose control unit connectors. If necessary, substitute a known-good control unit and recheck.**

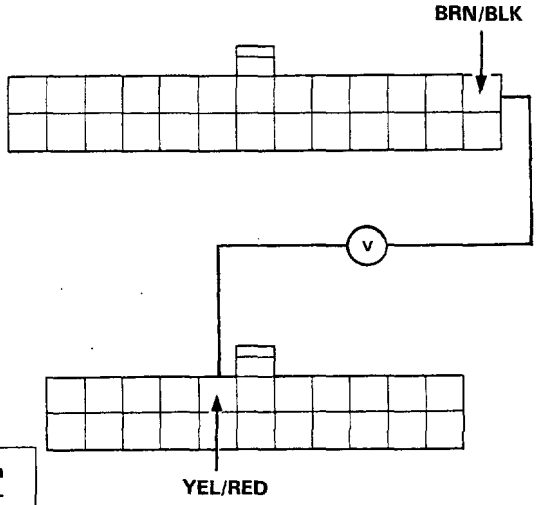

NOTE: View from wire side.

(cont'd)

Troubleshooting Flowchart (cont'd)

Self-diagnosis LED indicator blinks five times.

Turn the ignition switch ON.

Observe the A/T shift indicator and select each position separately.

Does the indicator light properly.?

NO → **See A/T shift position indicator inspection.**

YES

Shift to other than [R] position.

Measure the voltage between the A3 (GRN/RED) and A1 (BRN/BLK) terminals.

Is there battery voltage?

NO → **Check for short in GRN/RED wire between the A3 terminal and the shift position console switch. If wire is OK, check for loose connectors. If necessary, substitute a known-good control unit and recheck.**

YES

Shift to other than [N] and [P] position.

Measure the voltage between the A4 (LT GRN) and A1 (BRN/BLK) terminals.

Is there battery voltage?

NO → **Check for short in LT GRN wire between the A4 terminal and the shift position console switch. If wire is OK, check for loose control unit connectors. If necessary, substitute a known-good control unit and recheck.**

YES

To page 9-15

NOTE: View from wire side.

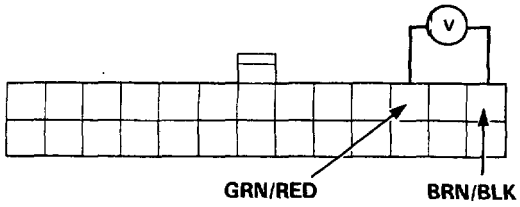

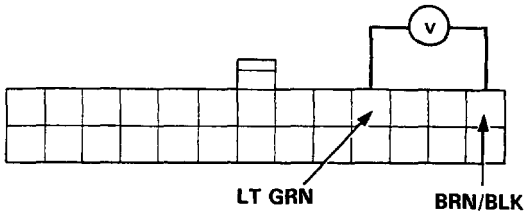

From page 9-14

NOTE: View from wire side.

Shift to other than [D] position.

Measure the voltage between the A5 (GRN/BLK) and A1 (BLK/RED) terminals.

Is there battery voltage?

NO → **Check for short in GRN/BLK wire between the A5 terminal and the shift position console switch. If wire is OK, check for loose control unit connectors. If necessary, substitute a known-good control unit and recheck.**

YES

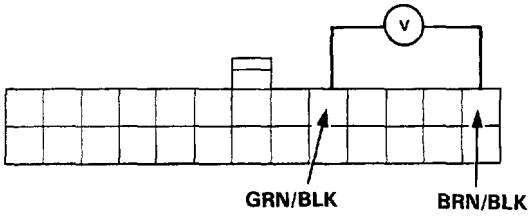

Shift to other than [S] position.

Measure the voltage between the A6 (GRN/BLU) and A1 (BRN/BLK) terminals.

Is there battery voltage?

NO → **Check for short in GRN/BLU wire between the A6 terminal and the shift position console switch. If wire is OK, check for loose control unit connectors. If necessary, substitute a known-good control unit and recheck.**

YES

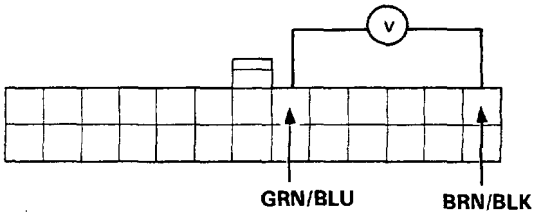

Shift to other than [2] position.

Measure the voltage between the A7 (GRN/YEL) and A1 (BRN/BLK) terminals.

Is there battery voltage?

NO → **Check for short in GRN/YEL wire between the A7 terminal and the shift position console switch. If wire is OK, check for loose control unit connectors. If necessary, substitute a known-good control unit and recheck.**

YES

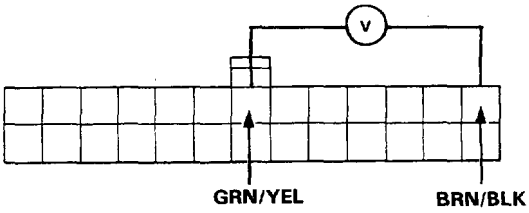

Substitute a known-good control unit and recheck.

(cont'd)

Troubleshooting Flowchart (cont'd)

Self-diagnosis LED indicator blinks six times.

Turn the ignition switch ON.

Observe the A/T shift indicator and select each position separately.

Does the indicator light properly?

NO → **See A/T shift position indicator inspection.**

YES

Shift to [R] position.

Measure the voltage between the A3 (GRN/RED) and A1 (BRN/BLK) terminals.

Is there voltage?

YES → **Repair open in GRN/RED wire between the A3 terminal and the shift position console switch.**

NO

Shift to [N] or [P] position.

Measure the voltage between the A4 (LT GRN) and A1 (BRN/BLK) terminals.

Is there voltage?

YES → **Repair open in LT GRN wire between the A4 terminal and the shift position console switch.**

NO

To page 9-17

NOTE: View from wire side.

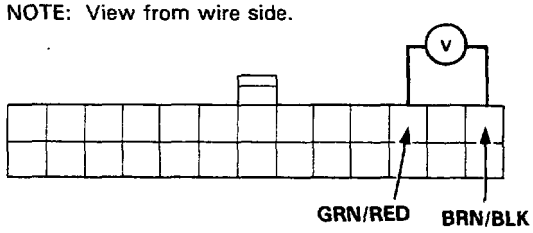

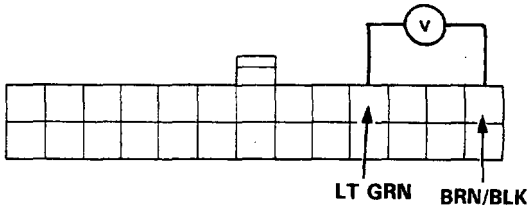

From page 9-16

Shift to [D] position.

Measure the voltage between the A5 (GRN/BLK) and A1 (BRN/BLK) terminals.

Is there voltage?

YES → **Repair open in GRN/BLK wire between the A5 terminal and the shift position console switch.**

NO

Shift to [S] position.

Measure the voltage between the A6 (GRN/BLU) and A1 (BRN/BLK) terminals.

Is there voltage?

YES → **Repair open in GRN/BLU wire between the A6 terminal and the shift position console switch.**

NO

Shift to [2] position.

Measure the voltage between the A7 (GRN/YEL) and A1 (BRN/BLK) terminals.

Is there voltage?

YES → **Repair open in GRN/YEL wire between the A7 terminal and the shift position console switch.**

NO

Check for loose control unit connectors. If necessary, substitute a known-good control unit and recheck.

NOTE: View from wire side.

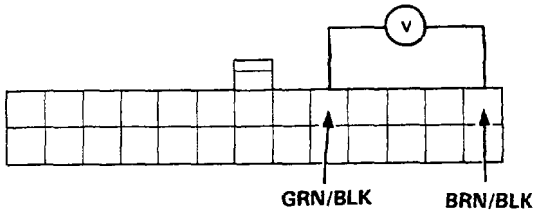

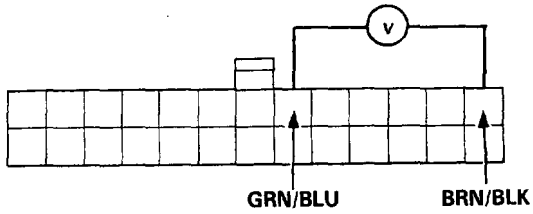

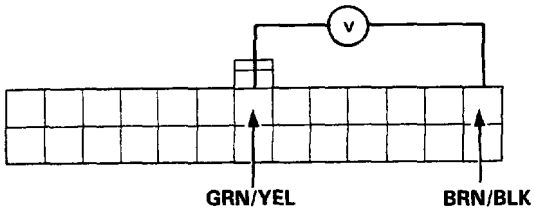

(cont'd)

Troubleshooting Flowchart (cont'd)

Self-diagnosis LED indicator blinks seven times.

Disconnect the 26P connector from the control unit.

Turn the ignition switch ON.

Measure the voltage between the A11 (BLU/YEL) and A1 (BRN/BLK) terminals.

Is there voltage? — YES → **Repair short to power source in BLU/YEL wire between the A11 terminal and the shift control solenoid valve A.**

NO

Turn the ignition switch OFF.

Measure the resistance between the A11 (BLU/YEL) and A1 (BRN/BLK) terminals.

Is the resistance 12—24 Ω? — NO → **Check for open in BLU/YEL wire between the A11 terminal and the shift control solenoid valve A. If wire is OK, check the Shift Control Solenoid Valve A.**

YES

Disconnect the 2P connector from the shift control solenoid valve assembly.

Check for continuity between the A11 (BLU/YEL) and A1 (BRN/BLK) terminals.

Is there continuity? — YES → **Repair short to ground in BLU/YEL wire between the A11 terminal and the shift control solenoid valve A.**

NO

Connect the 2P connector to the shift control solenoid valve assembly.

Check for loose control unit connectors. If necessary, substitute a known-good control unit and recheck.

NOTE: View from wire side.

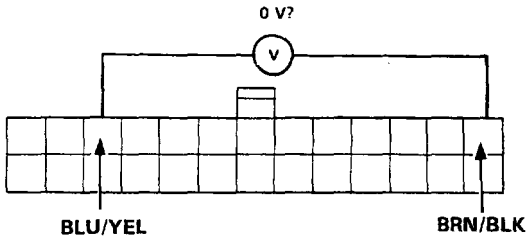

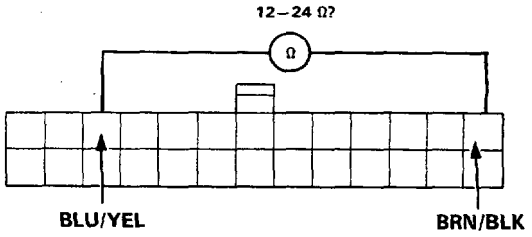

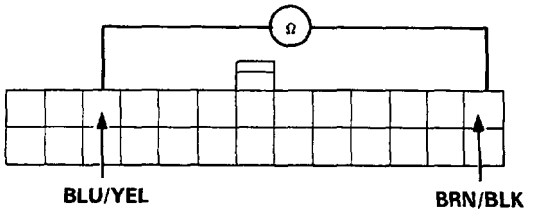

Self-diagnosis LED indicator blinks eight times.

Disconnect the 26P connector from the control unit.

Turn the ignition switch ON.

Measure the voltage between the A12 (GRN/WHT) and A1 (BRN/BLK) terminals.

Is there voltage?

YES → **Repair short to power source in GRN/WHT wire between the A12 terminal and shift control solenoid valve B.**

NO

Turn the ignition switch OFF.

Measure the resistance between the A12 (GRN/WHT) and A1 (BRN/BLK) terminals.

Is the resistance 12–24 Ω?

NO → **Check for open in GRN/WHT wire between the A12 terminal and the shift control solenoid valve B. If wire is OK, check the Shift Control Solenoid Valve B.**

YES

Disconnect the 2P connector from the shift control solenoid valve assembly.

Check for continuity between the A12 (GRN/WHT) and A1 (BRN/BLK) terminals.

Is there continuity?

YES → **Repair short to ground in GRN/WHT wire between the A12 terminal and the shift control solenoid valve B.**

NO

Connect the 2P connector to the shift control solenoid valve assembly.

Check for loose control unit connectors. If necessary, substitute a known-good control unit and recheck.

NOTE: View from wire side.

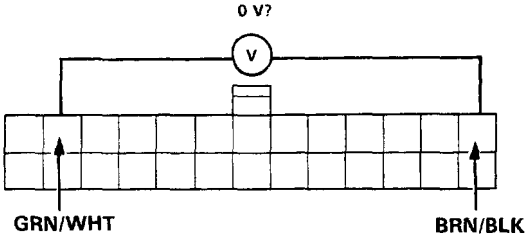

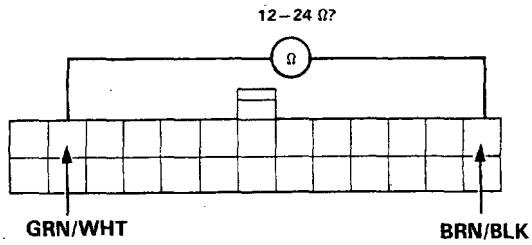

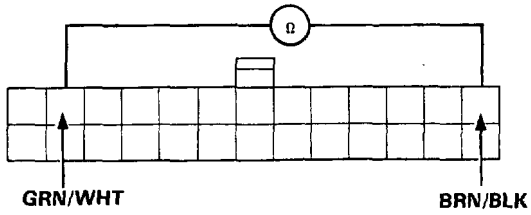

(cont'd)

Troubleshooting Flowchart (cont'd)

Self-diagnosis LED indicator blinks nine times.

Check the state of installation of the NC speed sensor.

OK? — NO → **Reinstall and recheck.**

YES

Disconnect the 2P connector from the NC speed sensor coupler.

Measure the resistance of the NC speed sensor.

Is the resistance 400–600 ohms? (20°C) — NO → **Replace the NC speed sensor.**

YES

Reconnect the NC speed sensor.

Disconnect the 22P connector from the control unit.

Measure the resistance between the B3 (BLU/GRN) and B4 (BLU/YEL).

Is the resistance 400–600 ohms? (20°C) — NO → Check for continuity between the B3 (BLU/GRN) terminal and body ground.

YES

Check for loose control unit connectors. If necessary, substitute a known-good control unit and recheck.

Is there continuity? — YES → **Repair short in BLU/GRN or BLU/YEL wire between B3 and B4 terminals and the NC speed sensor.**

NO

Check for continuity on the BLU/GRN wire between B3 terminal and the NC speed sensor.

Is there continuity? — NO → **Repair open in BLU/GRN wire.**

YES

Check for continuity on the BLU/YEL wire between B4 terminal and NC speed sensor.

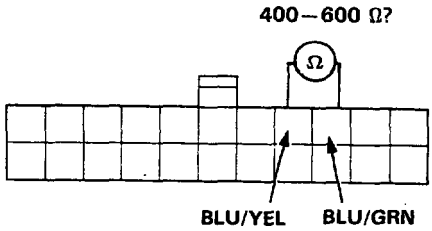

NOTE: View from wire side.

Self-diagnosis LED indicator blinks ten times.

Turn the ignition switch ON.

Check whether the PGM-FI LED display blinks.

Does the LED blink? — YES → **Repair the PGM-FI System.**

NO

Turn the ignition switch OFF.

Disconnect the 26P and 22P connectors from the control unit.

Turn the ignition switch ON.

Measure the voltage between the B14 (ORN) and A1 (BRN/BLK) terminals.

Is the voltage 4.75—5.25 V? — NO → **Repair open or short in ORN wire between the B14 terminal and the D14 terminal of the PGM-FI ECU.**

YES

Turn the ignition switch OFF.

Connect the 26P and 22P connectors to the control unit.

Start the engine and warm it up to normal operating temperature.

Measure the voltage between the B9 (RED/WHT) and A1 (BRN/BLK) terminals.

Is the voltage 0.50—1.20 V? — NO → **Repair open or short in RED/WHT wire between the B9 terminal and the coolant temperature sensor.**

YES

Check for loose control unit connectors. If necessary, substitute a known-good control unit.

NOTE: View from wire side.

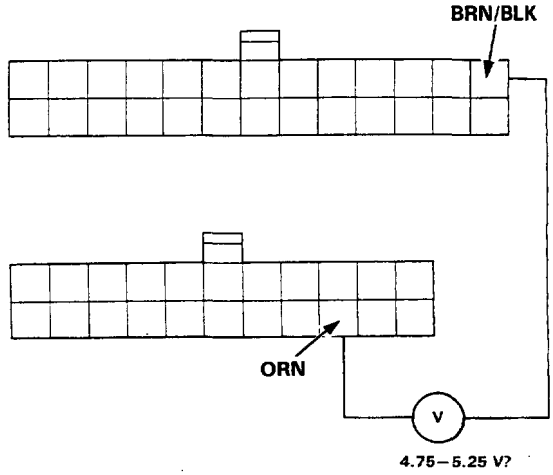

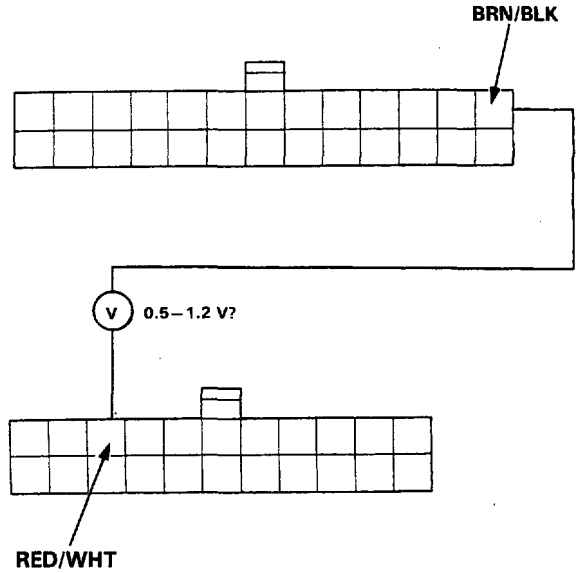

Troubleshooting Flowchart (cont'd)

Self-diagnosis LED indicator blinks eleven times.

Disconnect the 26P connectors from the control unit.

Start the engine.

Measure the voltage between the A9 (BLU) and A1 (BRN/BLK) terminals.

Is there battery voltage?

NO → **Repair open or short in BLU wire between the A9 terminal and the ignition coil.**

YES → **Check for loose control unit connectors. If necessary, substitute a known-good control unit and recheck.**

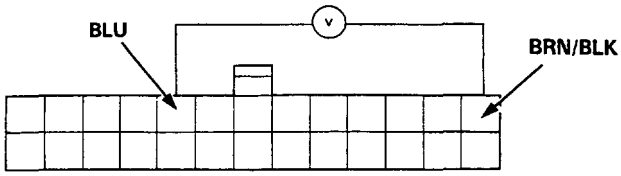

NOTE: View from wire side.

Self-diagnosis LED indicator blinks twelve.

Turn the ignition switch ON.

Measure the voltage between the A20 (YEL) and A1 (BRN/BLK) terminals.

Is there battery voltage?

NO → **Repair short in YEL wire between the A20 terminal and the cooling fan control unit. If wire is OK, check the cooling fan control unit.**

YES → **Substitute a known-good control unit and recheck.**

NOTE: View from wire side.

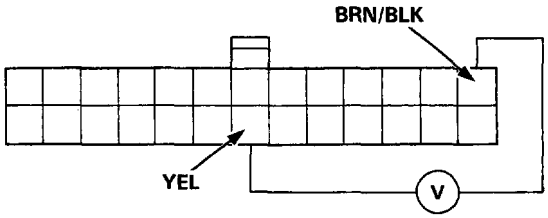

Troubleshooting Flowchart (cont'd)

NOTE: View from wire side.

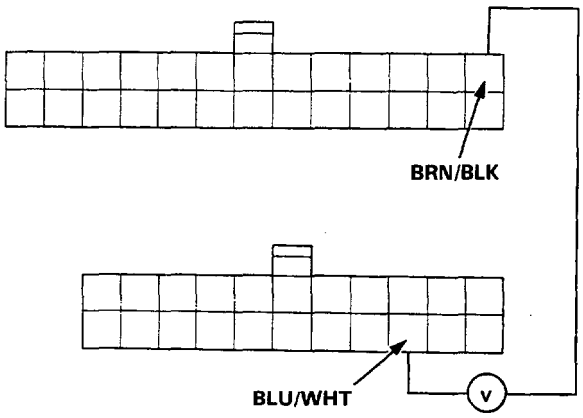

Self-diagnosis LED indicator blinks fourteen times.

Start the engine and warm it up to normal operating temperature.

Shift to [P] position

Turn the ignition switch OFF.

Turn the ignition switch ON and wait for at least two seconds.

Using an analog voltmeter, measure the voltage between the B15 (+) and A1 (−) terminals.

Is there approx. 5 V for over five seconds?

NO → Does the meter jerk from 0 V to 4 V approx every four seconds?

YES → **Refer to PGM-FI ECU Signal.**

NO → Is the Check Engine warning light on?

YES → **Repair the PGM-FI System.**

NO → Turn the ignition switch OFF.

Disconnect the A connector from the PGM-FI ECU.

To page 9-25

YES → Jack up the front of the car.

Start the engine.

Shift to [D] position.

Raise the engine to over 2,000 rpm (over 40 mph in 4th gear) for five seconds.

Release and depress the throttle so that the transmission downshifts and upshifts.

Using an analog voltmeter, measure the voltage between B15 (+) and A1 (−) terminals.

Does the meter jerk toward 0 V only when the transmission shifts?

YES → **Check for loose control unit connectors. If necessary, substitute a known-good control unit and recheck.**

NO

To page 9-25

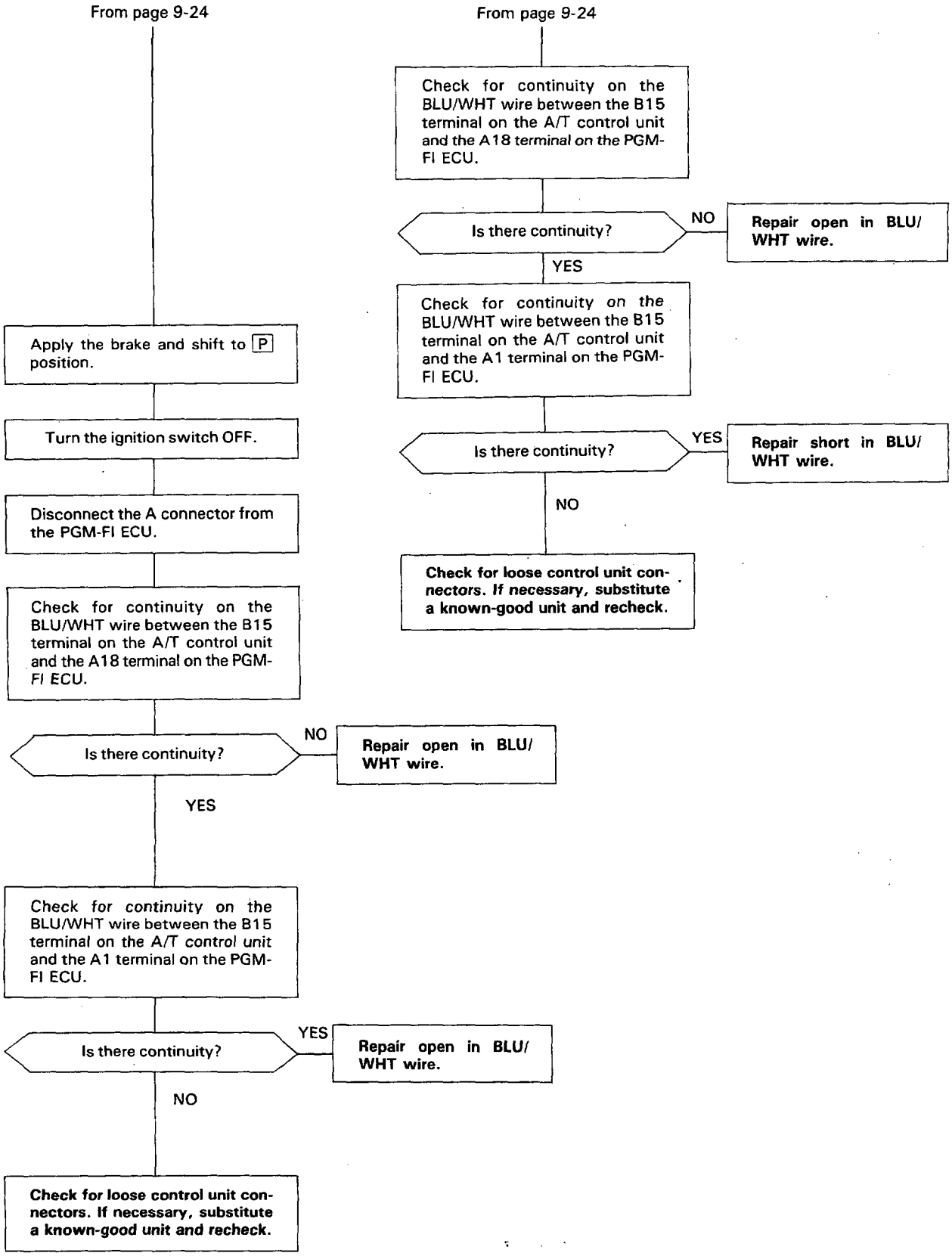
From page 9-24
Apply the brake and shift to P position.
Turn the ignition switch OFF.
Disconnect the A connector from the PGM-FI ECU.
Check for continuity on the BLU/WHT wire between the B15 terminal on the A/T control unit and the A18 terminal on the PGM-FI ECU.
Is there continuity?
NO
Repair open in BLU/WHT wire.
YES
Check for continuity on the BLU/WHT wire between the B15 terminal on the A/T control unit and the A1 terminal on the PGM-FI ECU.
Is there continuity?
YES
Repair open in BLU/WHT wire.
NO
Check for loose control unit connectors. If necessary, substitute a known-good unit and recheck.
From page 9-24
Check for continuity on the BLU/WHT wire between the B15 terminal on the A/T control unit and the A18 terminal on the PGM-FI ECU.
Is there continuity?
NO
Repair open in BLU/WHT wire.
YES
Check for continuity on the BLU/WHT wire between the B15 terminal on the A/T control unit and the A1 terminal on the PGM-FI ECU.
Is there continuity?
YES
Repair short in BLU/WHT wire.
NO
Check for loose control unit connectors. If necessary, substitute a known-good unit and recheck.

Troubleshooting Flowchart (cont'd)

Self-diagnosis LED indicator blinks fifteen times.

Check the state of installation of NM (NC) speed sensor.

OK? — NO → **Reinstall and recheck.**

YES

Disconnect the 2P connector from the NM speed sensor.

Measure the resistance of the NM speed sensor.

Is the resistance 400–600 ohms? — NO → **Replace the NM speed sensor.**

YES

Reconnect the 2P connector to the NM speed sensor.

Disconnect the 22P connector from the control unit.

Measure the resistance between the B2 (ORN) and B17 (WHT) terminals.

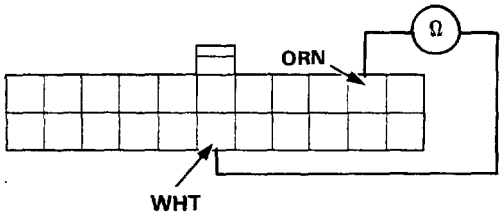

NOTE: View from wire side.

Is the resistance 400–600 ohms? (20°C) — NO → Check for continuity between B2 (ORN) terminal and body ground.

YES

Disconnect the 2P connector from the NC speed sensor.

Measure the resistance of the NC speed sensor.

Is there continuity? — YES → **Repair short in ORN or WHT wires between B2 and B17 terminals and the NM speed sensor.**

NO

Check for continuity between B2 (ORN) terminal and the NM speed sensor.

To page 9-27

Is the resistance 400–600 ohms? (20°C) — NO → **Replace the NC speed sensor.**

YES

Reconnect the 2P connector to the NC speed sensor.

To page 9-27

From page 9-26

From page 9-26

Is there continuity?

NO → **Repair open in ORN wire between B2 terminal and the NM speed sensor.**

YES

Check for continuity between B17 (WHT) terminal and the NM speed sensor.

Is there continuity?

NO → **Repair open in WHT wire between B17 terminal and the NM speed sensor.**

YES

Check for loose control unit connectors. If necessary, substitute a known-good unit and recheck.

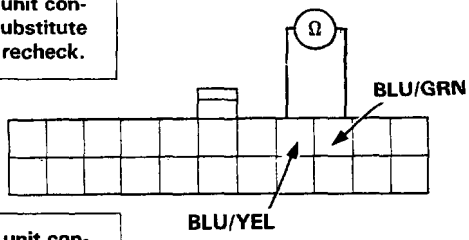

Measure the resistance between B3 (BLU/GRN) and B4 (BLU/YEL) terminals.

Is the resistance 400–600 ohms? (20°C)

YES → **Check for loose control unit connectors. If necessary, substitute a known-good control unit and recheck.**

NO

Check for continuity between B3 (BLU/GRN) terminal and body ground.

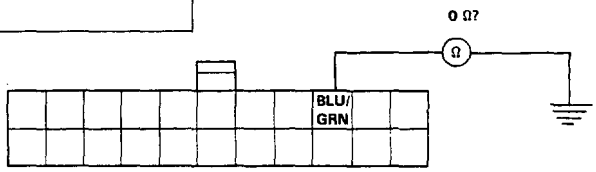

Is there continuity?

YES → **Repair short in BLU/GRN or BLU/YEL wires between B3 and B4 terminals and the NC speed sensor.**

NO

Check for continuity between B3 (BLU/GRN) terminal and the NC speed sensor.

NOTE: View from wire side.

Is there continuity?

NO → **Repair open in BLU/GRN wire between B3 terminal and the NC speed sensor.**

YES

Check for continuity between B4 (BLU/YEL) terminal and the NC speed sensor.

Is there continuity?

NO → **Repair open in BLU/YEL wire between B4 terminal and the NC speed sensor.**

YES

Check for loose control unit connectors. If necessary, substitute a known-good unit and recheck.

(cont'd)

Troubleshooting Flowchart (cont'd)

Inspection of brake light signal.

Check the brake lights come on with the brake pedal pushed.

Is the brake lights ON?

NO → **Faulty brake light circuit.**

YES

Disconnect the 26P and 22P connectors, from the control unit.

Measure the voltage between B22 (GRN/WHT) and A1 (BRN/BLK) terminal with the brake pedal pushed.

Is there battery voltage?

NO → **Repair open in GRN/WHT wire between B22 terminal and brake light switch.**

YES

Brake light signal OK.

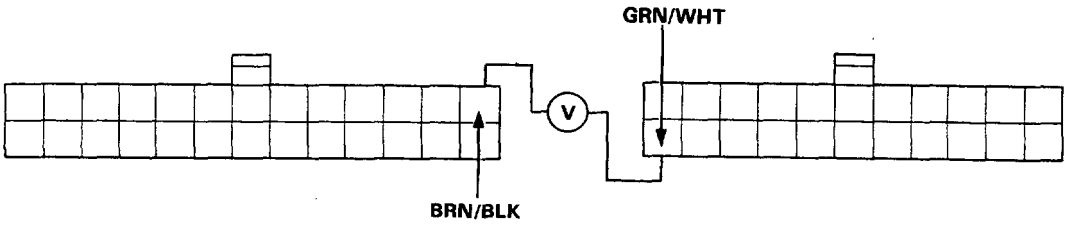

NOTE: View from wire side.

Inspection of the A/C signal.

Start the engine.

Turn the blower switch ON.

Push the A/C switch ON.

Does A/C compressor clutch engage?

NO → **See Air Conditioner inspection.**

YES

Stop the engine.

Disconnect the 26P connector from the control unit.

Start the engine.

Measure the voltage between A16 (RED/BLU) and A1 (BRN/BLK) terminal with the brake pedal pushed.

Is there battery voltage?

NO → **Repair open in RED/BLU wire between A16 terminal and A/C clutch relay.**

YES

A/C signal is OK.

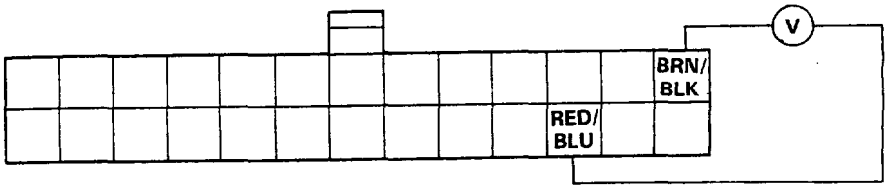

NOTE: View from wire side.

(cont'd)

Troubleshooting Flowchart (cont'd)

S_4 indicator light does not come on with the ignition switch ON. (It should come on for about 2 seconds.)

Shift to [D] or [S] and depress the S_4 switch.

Does the S_3 indicator light come on?

YES → **Check for loose control unit connectors. If necessary, substitute a known-good control unit and recheck.**

NO

Turn the ignition switch OFF.

Disconnect the 26P and 22P connectors from the control unit.

Check for continuity between the B13 (GRN) and A1 (BRN/BLK) terminals.

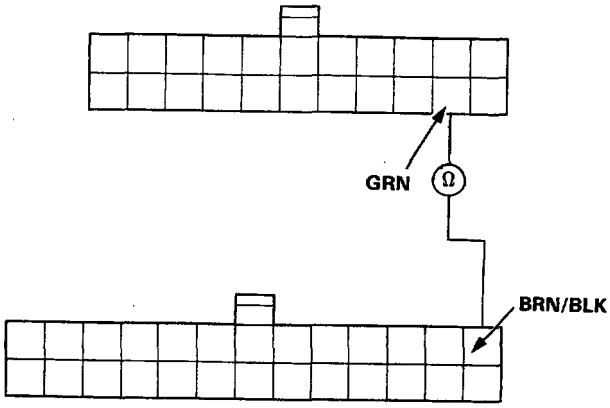

NOTE: View from wire side.

Is there continuity?

NO → Check for continuity on the GRN wire between B13 terminal and the S_4 switch.

Is there continuity?

NO → **Repair open in GRN wire between B13 terminal and S_4 switch.**

YES → Check for continuity on BLK wire between S_4 switch and G401.

Is there continuity?

YES → **Replace S_4 switch.**

NO → **Repair open in BLK wire between S_4 switch and G401.**

YES → Reconnect the 26P and 22P connectors to the control unit.

Turn the ignition switch ON.

Check for voltage on YEL/RED wire at the gauge assembly.

To page 9-31

From page 9-30

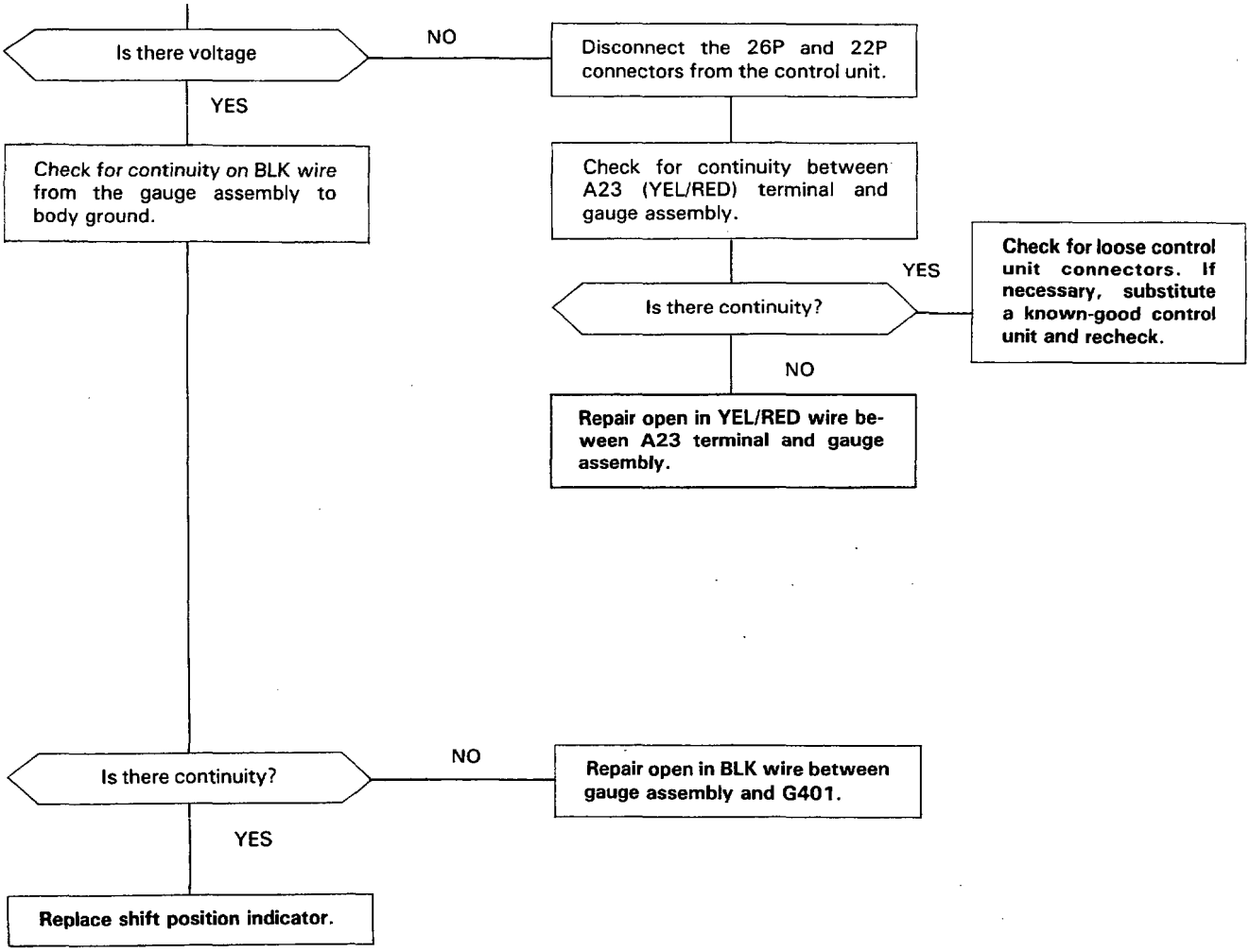

Troubleshooting Flowchart (cont'd)

NOTE: View from wire side.

S_4 indicator light is on steady (not blinking) whenever the ignition switch is ON.

Turn the ignition switch OFF.

Disconnect the 26P and 22P connectors from the control unit.

Check for continuity between the B13 (GRN) terminal and body ground.

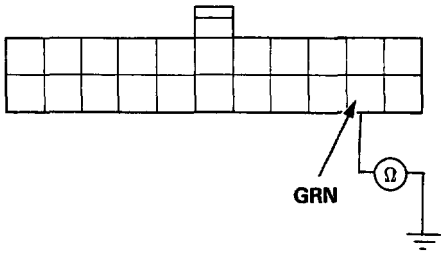

Is there continuity?

YES → Disconnect the 2P connector from the S_4 switch.

Check for continuity between the B13 (GRN) terminal and body ground.

Is there continuity?

YES → **Repair short in GRN wire between B13 terminal and S_4 switch.**

NO → **Replace S_4 switch.**

NO → Turn the ignition switch ON.

Measure voltage between A23 (YEL/RED) terminal and body ground.

Is there voltage?

NO → **Replace the A/T control unit.**

YES → Measure voltage between the YEL/RED wire at the gauge assembly to body ground.

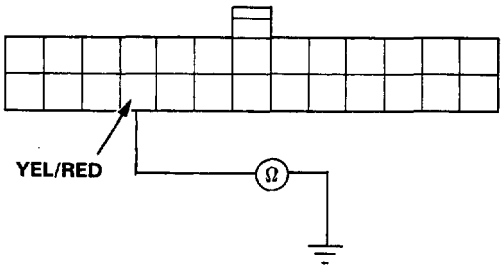

Is there voltage?

NO → **Replace faulty shift position indicator.**

YES → **Repair short to power source on YEL/RED wire between A23 terminal and gauge assembly.**

A/T Speed Sensors

Replacement

1. Disconnect the connector.
2. Remove the A/C pipe holder bolt.
3. Remove the 6 mm bolt from the L. side cover and remove the speed sensor.

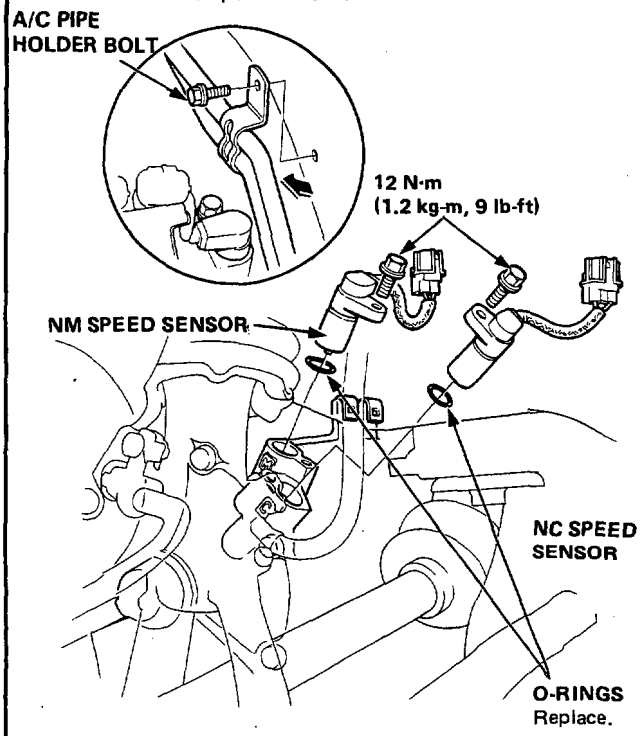

4. Replace the O-ring with a new one before reassembling the A/T speed sensor.

Illustrated Index

NOTE:
- Clean all parts thoroughly in solvent or carburetor cleaner, and dry with compressed air. Blow out all passages.
- Coat all parts with ATF before reassembly.

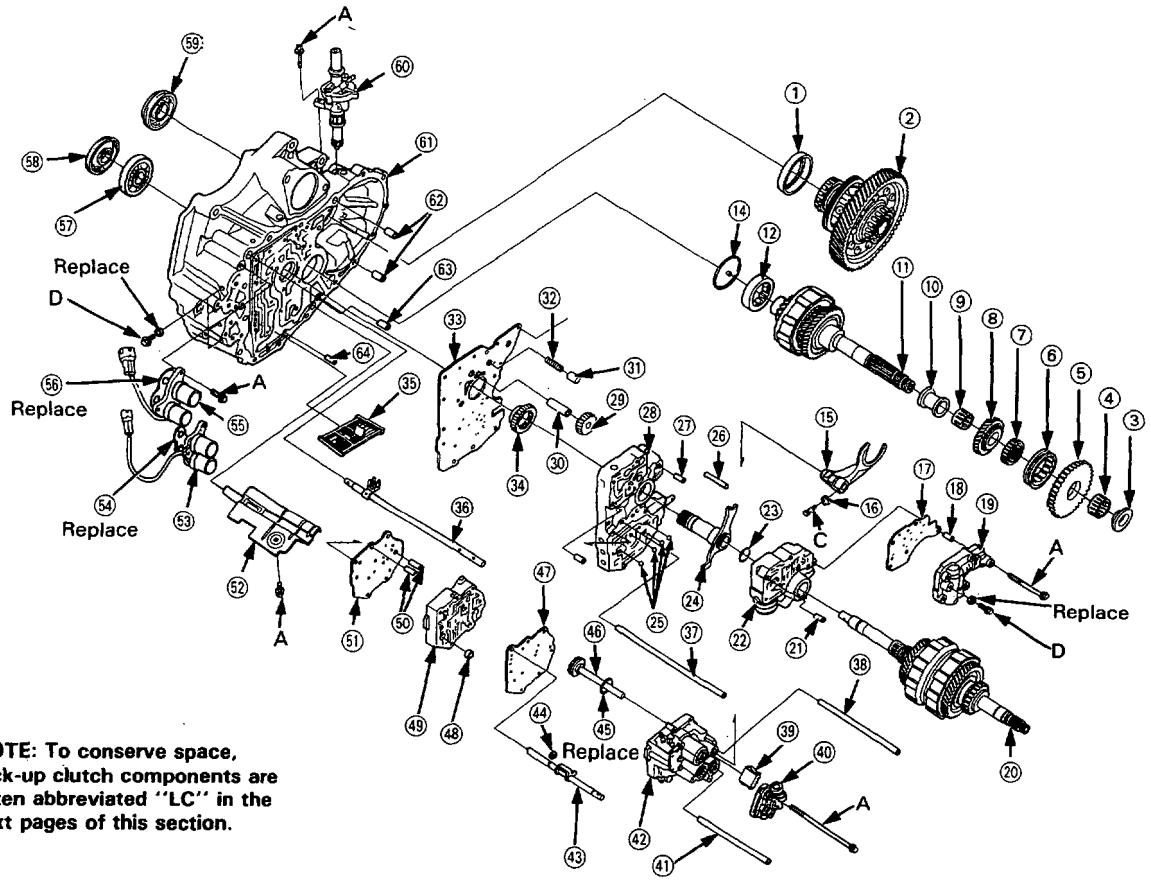

NOTE: To conserve space, lock-up clutch components are often abbreviated "LC" in the text pages of this section.

1 DIFFERENTIAL BEARING OUTER RACE
2 DIFFERENTIAL ASSY
3 REVERSE GEAR COLLAR
4 NEEDLE BEARING
5 COUNTERSHAFT REVERSE GEAR
6 REVERSE GEAR SELECTOR
7 SELECTOR HUB
8 COUNTERSHAFT 4th GEAR
9 NEEDLE BEARING
10 SPACER COLLAR
11 COUNTERSHAFT
12 NEEDLE BEARING 38.5 x 67 x 19 mm
14 OIL GUIDE PLATE
15 REVERSE SHIFT FORK
16 LOCK WASHER Replace
17 L/C SHIFT VALVE SEPARATOR PLATE
18 DOWEL PIN 8 x 14 mm
19 L/C SHIFT VALVE BODY
20 MAINSHAFT
21 DOWEL PIN 8 x 14 mm
22 REGULATOR VALVE BODY
23 O-RING 31 x 1.7 mm Replace
24 STATOR SHAFT ARM
25 STEEL BALL
26 STOP PIN 8 x 55 mm
27 DOWEL PIN 8 x 14 mm
28 MAIN VALVE BODY
29 PUMP DRIVEN GEAR
30 PUMP GEAR SHAFT
31 TORQUE CONVERTER CHECK VALVE
32 CHECK VALVE SPRING
33 MAIN VALVE BODY SEPARATOR PLATE
34 PUMP DRIVE GEAR
35 FILTER SCREEN Replace
36 CONTROL SHAFT
37 1st CLUTCH PIPE
38 3rd CLUTCH PIPE
39 TRANSMISSION MAGNET
40 SERVO COVER
41 4th CLUTCH PIPE
42 SERVO VALVE BODY
43 THROTTLE CONTROL SHAFT
44 E-CLIP 7 mm Replace
45 O-RING 31 x 2.7 mm
46 SHIFT FORK SHAFT
47 SERVO SEPARATOR PLATE
48 FILTER Replace
49 SECONDARY VALVE BODY ASSEMBLY
50 DOWEL PIN 8 x 40 mm
51 SECONDARY SEPARATOR PLATE
52 BAFFLE PLATE
53 SHIFT CONTROL SOL. A/B VALVE ASSEMBLY
54 SHIFT CONTROL SOL. BASE GASKET
55 L/C CONTROL SOL. A/B VALVE ASSEMBLY
56 L/C CONTROL SOL. BASE GASKET
57 BALL BEARING 16008
58 OIL SEAL 44 x 68 x 8 mm
59 OIL SEAL 40 x 56 x 9 mm
60 SPEED SENSOR ASSEMBLY Do not remove except for power steering overhaul.
61 TORQUE CONVERTER HOUSING
62 DOWEL PIN 14 x 25 mm
63 DOWEL PIN 14 x 20 mm
64 DOWEL PIN 8 x 14 mm

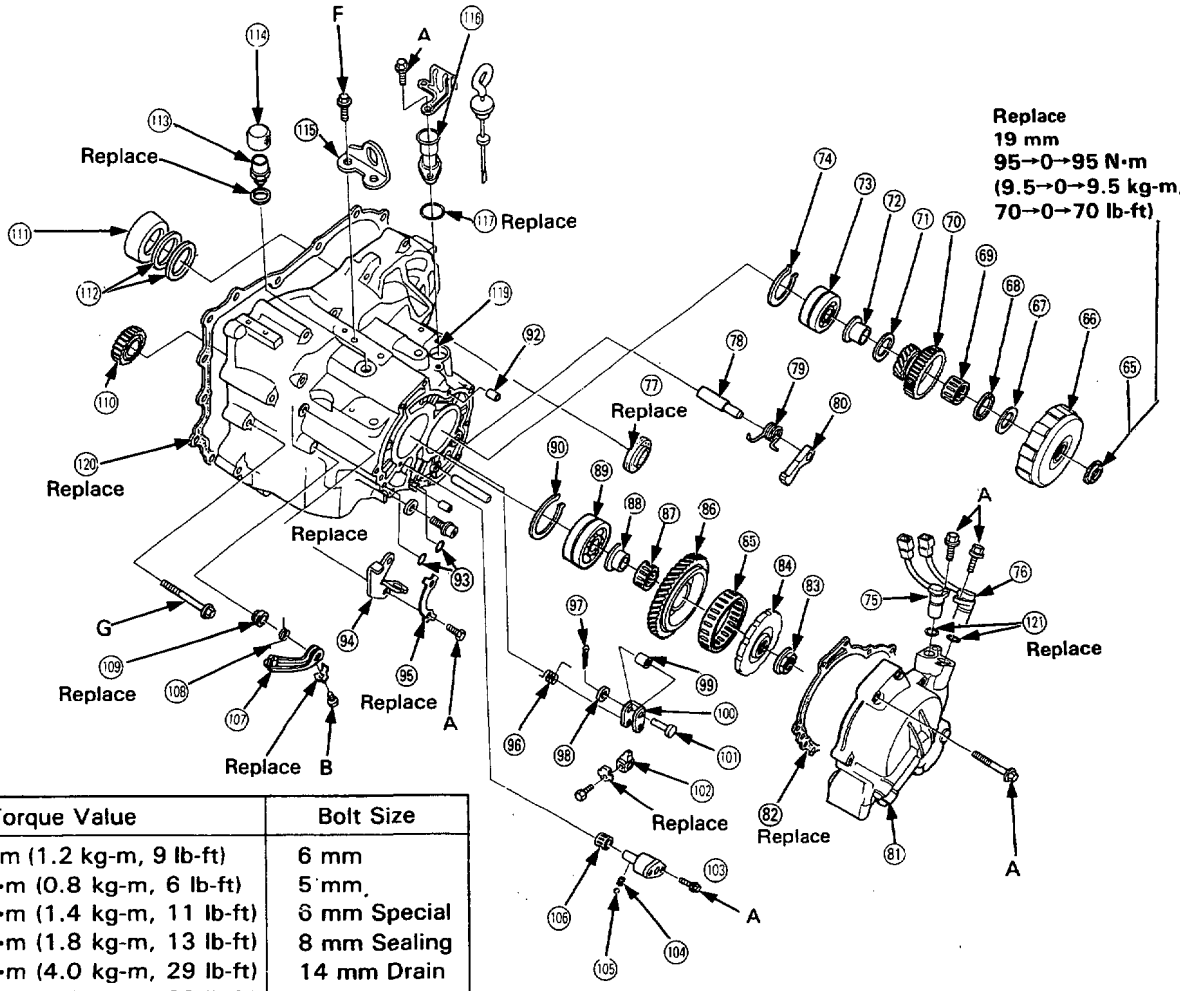

Torque Value	Bolt Size
A — 12 N·m (1.2 kg-m, 9 lb-ft)	6 mm
B — 8 N·m (0.8 kg-m, 6 lb-ft)	5 mm
C — 14 N·m (1.4 kg-m, 11 lb-ft)	6 mm Special
D — 18 N·m (1.8 kg-m, 13 lb-ft)	8 mm Sealing
E — 40 N·m (4.0 kg-m, 29 lb-ft)	14 mm Drain
F — 30 N·m (3.0 kg-m, 22 lb-ft)	8 mm
G — 55 N·m (5.5 kg-m, 40 lb-ft)	10 mm

65 LOCK NUT 19 mm
66 1st CLUTCH ASSEMBLY
67 THRUST WASHER 26 mm
68 THRUST NEEDLE BEARING 31 x 47 x 2 mm
69 NEEDLE BEARING 31 x 36 x 18.5 mm
70 MAINSHAFT 1st GEAR
71 THRUST WASHER 31 x 42 x 1.5 mm
72 COLLAR 26 mm
73 BALL BEARING 26 x 75 x 18.2 mm
74 SNAP RING 75 mm
75 NM SPEED SENSOR
76 NC SPEED SENSOR
77 OIL SEAL 40 x 56 x 9 mm
78 PARKING PAWL SHAFT
79 PARKING PAWL SPRING
80 PARKING PAWL
81 END COVER
82 GASKET
83 LOCK NUT 23 mm
84 PARKING GEAR
85 ONE-WAY CLUTCH ASSEMBLY
86 COUNTERSHAFT 1st GEAR
87 NEEDLE BEARING
88 1st GEAR COLLAR
89 BALL BEARING 28 x 75 x 18.2 mm
90 SNAP RING 75 mm
91 STOP PIN
92 DOWEL PIN 8 x 14 mm
93 O-RING 7.7 x 2.3 mm Replace
94 THROTTLE CABLE STAY
95 LOCK PLATE
96 PARKING BRAKE SPRING
97 COTTER PIN 1.6 mm
98 WASHER 6 mm
99 PARKING BRAKE ROLLER
100 PARKING SHIFT ARM
101 ROLLER PIN
102 PARKING BRAKE STOPPER
103 IDLE SHAFT HOLDER
104 IDLE SHAFT SPRING
105 STEEL BALL
106 NEEDLE BEARING 14 x 18 x 15 mm
107 THROTTLE CONTROL LEVER
108 THROTTLE CONTROL SHAFT SPRING
109 OIL SEAL
110 REVERSE IDLER GEAR
111 DIFFERENTIAL BEARING OUTER RACE
112 DIFFERENTIAL THRUST SHIM
113 BREATHER JOINT
114 BREATHER CAP
115 TRANSMISSION HOOK
116 DIPSTICK HOLDER
117 O-RING 21.5 x 3.2 mm
118 DIPSTICK
119 TRANSMISSION HOUSING
120 TRANSMISSION GASKET
121 O-RINGS Replace

Main Valve Body

Disassembly/Inspection/Reassembly

NOTE:
- Clean all parts thoroughly in solvent or carburetor cleaner, and dry with compressed air. Blow out all passages.
- Check all valves for free movement. If any fail to slide freely, see Valve Body Repair.
- Coat all parts with ATF before reassembly.

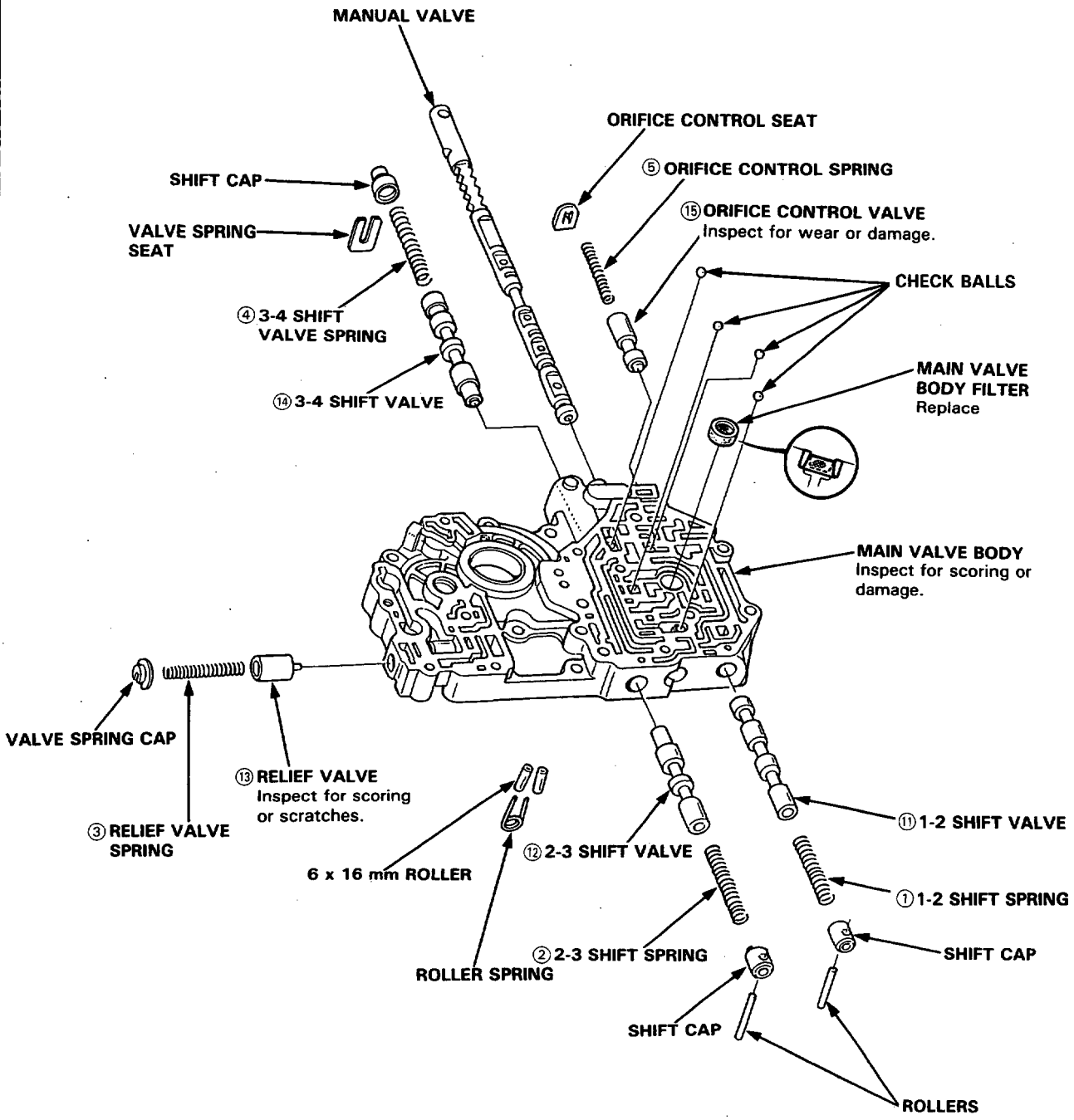

Unit of length: mm (in)

Spring Specifications

No.	Spring	Standard (New)			
		Wire Dia.	O.D.	Free Length	No. of Coils
①	1-2 shift spring	0.9 (0.035)	8.6 (0.339)	40.4 (1.591)	14.5
②	2-3 shift spring	0.9 (0.035)	9.6 (0.378)	39.6 (1.559)	12
③	Relief valve spring	1.0 (0.039)	8.4 (0.331)	52.0 (2.047)	23
④	3-4 shift spring	0.7 (0.028)	5.6 (0.220)	48.3 (1.902)	27.8
⑤	Orifice control spring	0.9 (0.035)	6.1 (0.240)	35.9 (1.413)	20
—	Torque converter check valve spring (not shown, located under the main valve body)	1.1 (0.043)	8.4 (0.331)	36.4 (1.433)	12

Sectional View

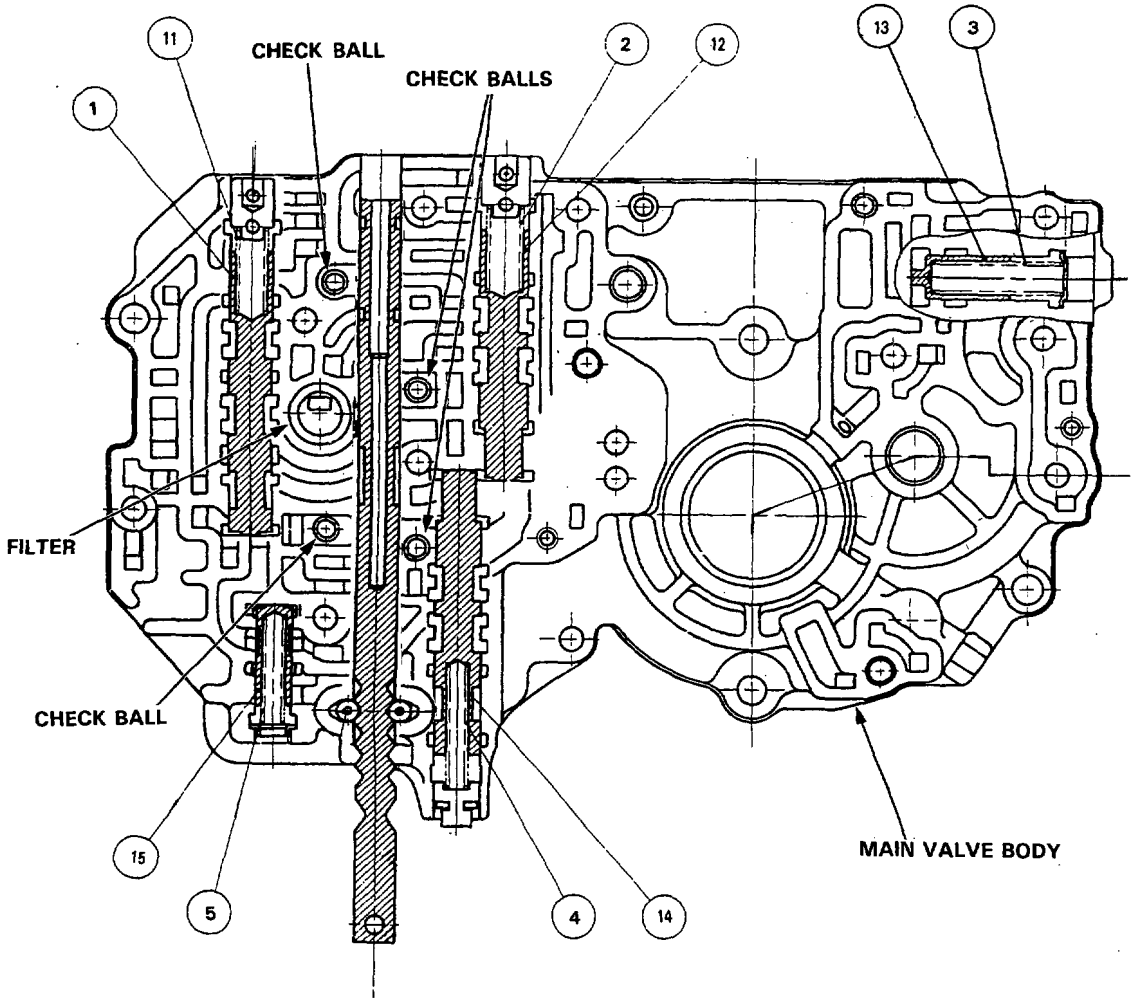

Secondary Valve Body

Disassembly/Inspection/Reassembly

NOTE:

- Clean all parts thoroughly in solvent or carburetor cleaner, and dry with compressed air. Blow out all passages.
- Check all valves for free movement. If any fail to slide freely, see Valve Body Repair.
- Coat all parts with ATF before reassembly.

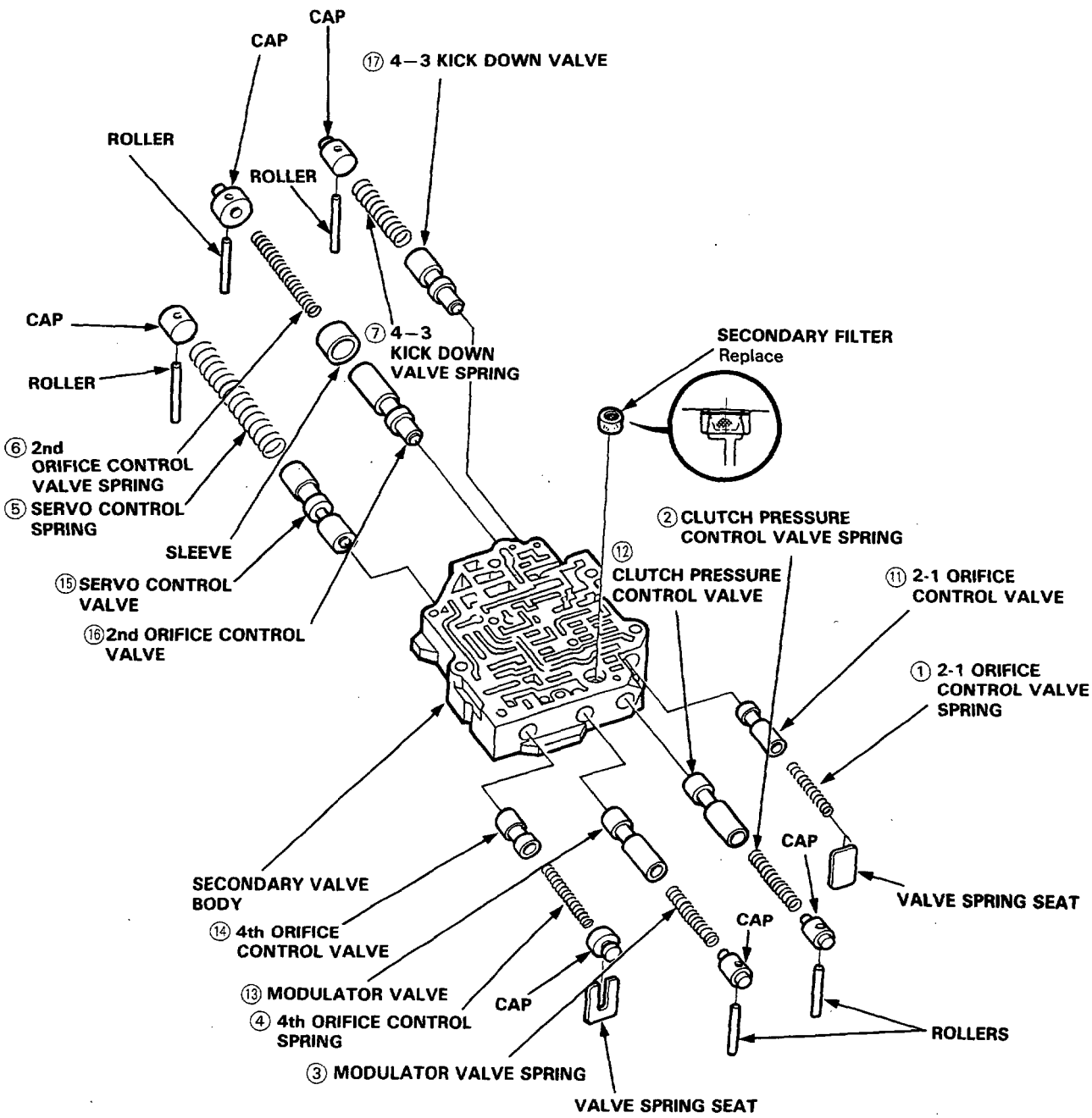

Spring Specifications

Unit of length: mm (in)

No.	Spring	Standard (New)			
		Wire Dia.	O.D.	Free Length	No. of Coils
①	2-1 orifice control spring	0.8 (0.031)	6.4 (0.252)	41.5 (1.634)	22.8
②	CPC valve spring	1.4 (0.055)	9.4 (0.370)	32.4 (1.276)	10.5
③	Modulator valve spring	1.4 (0.055)	9.4 (0.370)	33.0 (1.299)	10.5
		1.5 (0.059)	9.4 (0.370)	30.6 (1.205)	9.9
④	4th orifice control spring	0.9 (0.035)	6.6 (0.260)	27.6 (1.087)	10
⑤	Servo control valve spring	1.2 (0.047)	8.1 (0.319)	43.2 (1.701)	19
⑥	2nd orifice control spring	0.8 (0.031)	6.6 (0.260)	38.5 (1.516)	28
⑦	4-3 kick down valve spring	0.9 (0.035)	6.6 (0.260)	32.2 (1.268)	16

Sectional View

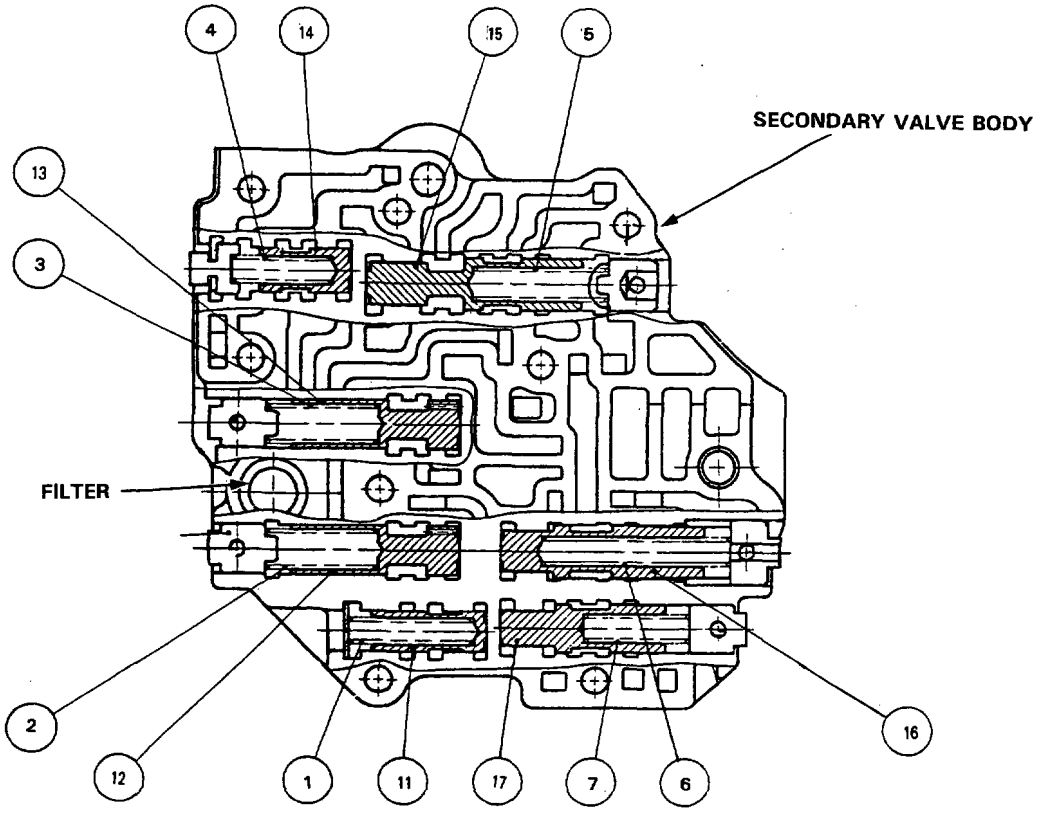

Servo Valve Body

Disassembly/Inspection/Reassembly

NOTE:
- Clean all parts thoroughly in solvent or carburetor cleaner, and dry with compressed air. Blow out all passages.
- Check all valves for free movement. If any fail to slide freely, see Valve Body Repair.
- Coat all parts with ATF before reassembly.

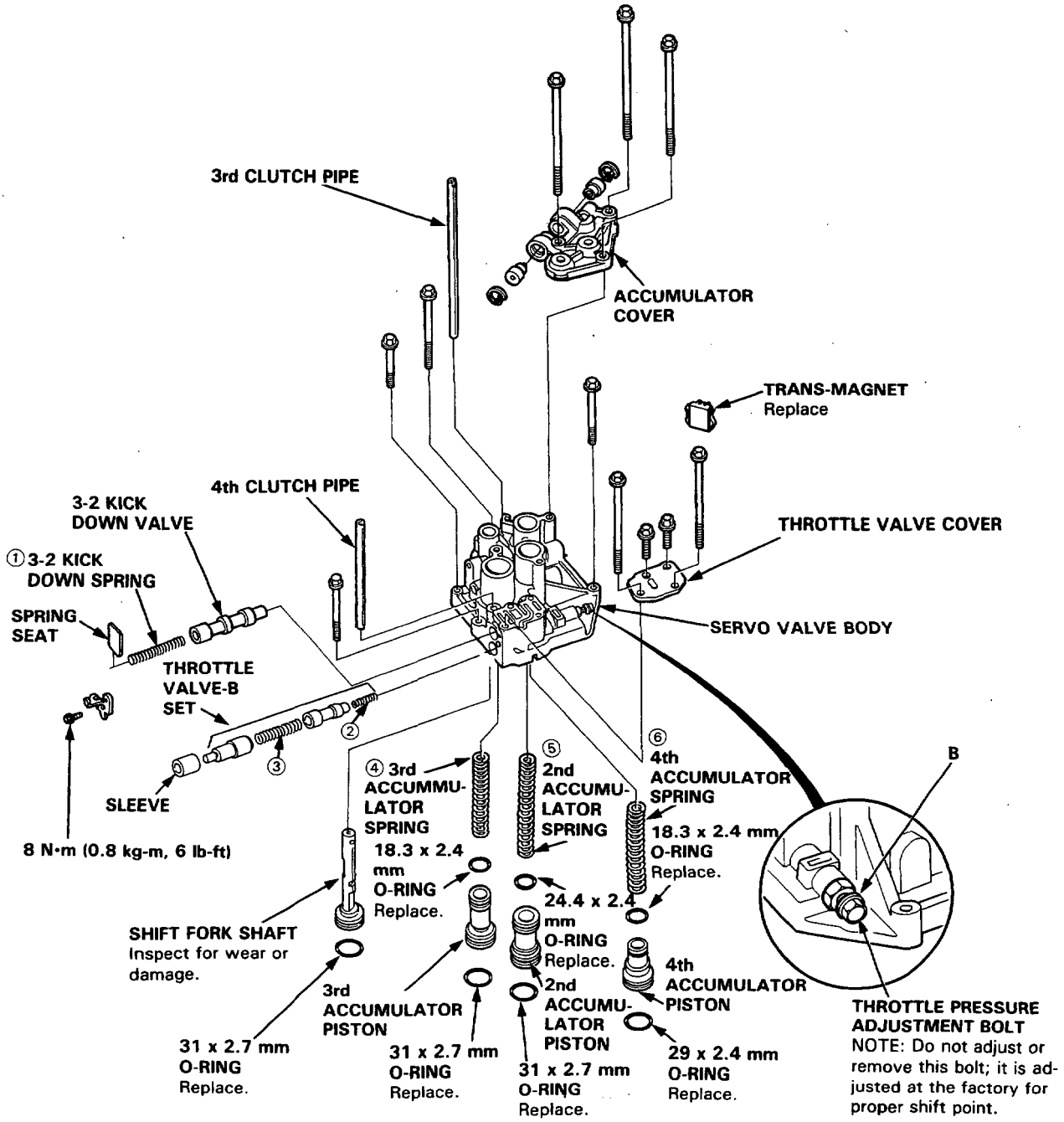

Unit of length: mm (in)

Spring Specifications

No.	Spring	Standard (New)			
		Wire Dia.	O.D.	Free Length	No. of Coils
①	3-2 kick down valve	1.0 (0.039)	6.6 (0.260)	40.5 (1.594)	20
②	Throttle control valve B adjusting spring	0.8 (0.031)	6.2 (0.244)	30.0 (1.181)	8
③	Throttle control valve B spring	1.6 (0.063)	8.5 (0.335)	41.3 (1.626)	13.9
④	3rd accumulator spring	2.9 (0.114)	17.9 (0.705)	82.2 (3.236)	12.1
⑤	2nd accumulator spring	2.71 x 4.4 (0.107 x 0.173)	20.0 (0.787)	79.7 (3.138)	16.2
⑥	4th accumulator spring	3.0 (0.118)	16.4 (0.646)	81.7 (3.217)	16.4

Regulator Valve Body

Disassembly/Inspection/Reassembly

NOTE:
- Clean all parts thoroughly in solvent or carburetor cleaner, and dry with compressed air.
- Blow out all passages.
- Check all valves for free movement: if any fail to slide, see Valve Body Repair.

1. Hold the regulator spring cap in place while removing the stopper bolt. Once the bolt is removed, release the spring cap slowly.

   CAUTION: The regulator spring cap can pop out when the lock bolt is removed.

2. Reassembly is in the reverse order of disassembly.

   NOTE:
   - Coat all parts with ATF.
   - Align the hole in the regulator spring cap with the hole in the valve body, press the spring cap into the body, and tighten the lock bolt.

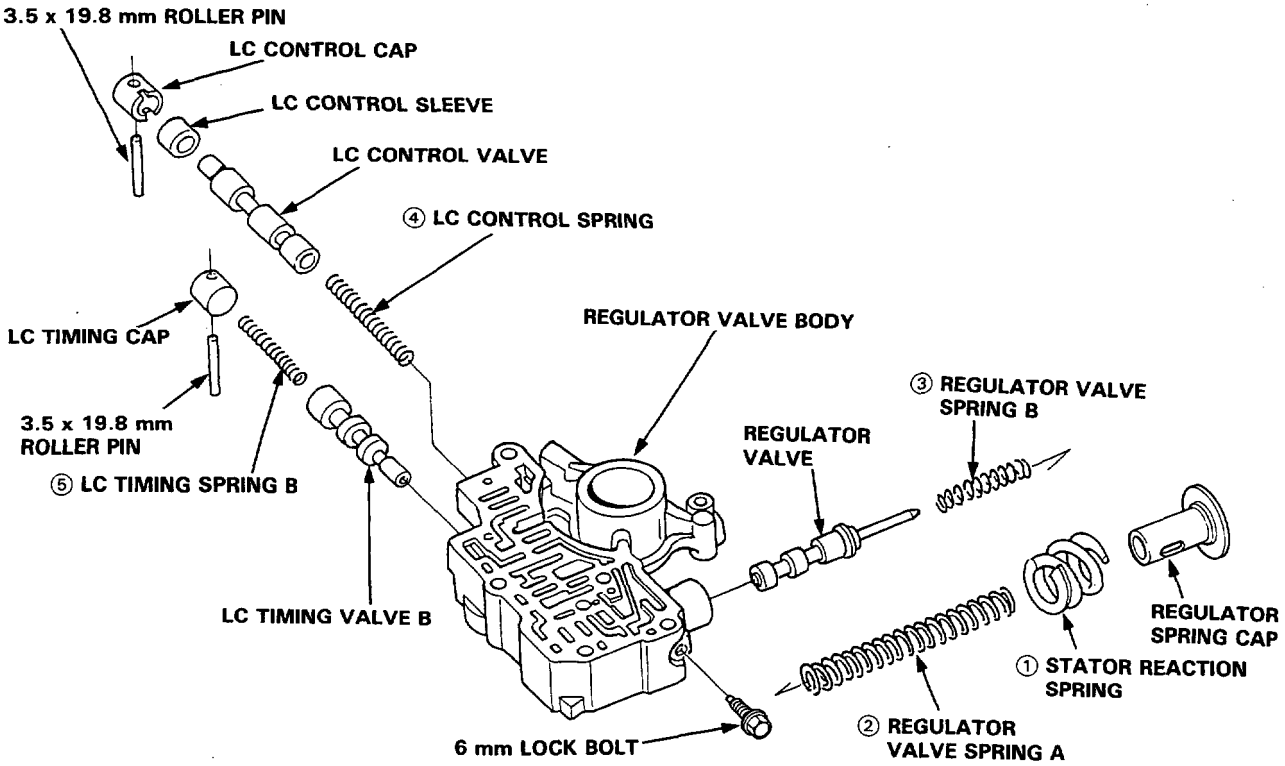

Spring Specifications

Unit of length: mm (in)

No.	Spring	Standard (New)			
		Wire Dia.	O.D.	Free Length	No. of Coils
①	Stator reaction spring	6.0 (0.236)	38.4 (1.512)	30.3 (1.193)	2
②	Regulator valve spring A	1.8 (0.071)	14.7 (0.579)	87.4 (3.441)	16.5
③	Regulator valve spring B	1.8 (0.071)	9.6 (0.378)	44.0 (1.732)	7.5
④	Lock-up control spring	0.8 (0.031)	6.6 (0.260)	39.5 (1.555) 40.2 (1.583) 41.0 (1.614)	25
⑤	Lock-up timing spring B	0.9 (0.035)	5.6 (0.220)	40.7 (1.602)	30

Lock-Up Shift Valve Body

Disassembly/Inspection/Reassembly

NOTE:
- Clean all parts thoroughly in solvent or carburetor cleaner, and dry with compressed air. Blow out all passages.
- Check all valves for free movement, if any fail to slide freely, see Valve Body Repair.
- Coat all parts with ATF before reassembly.

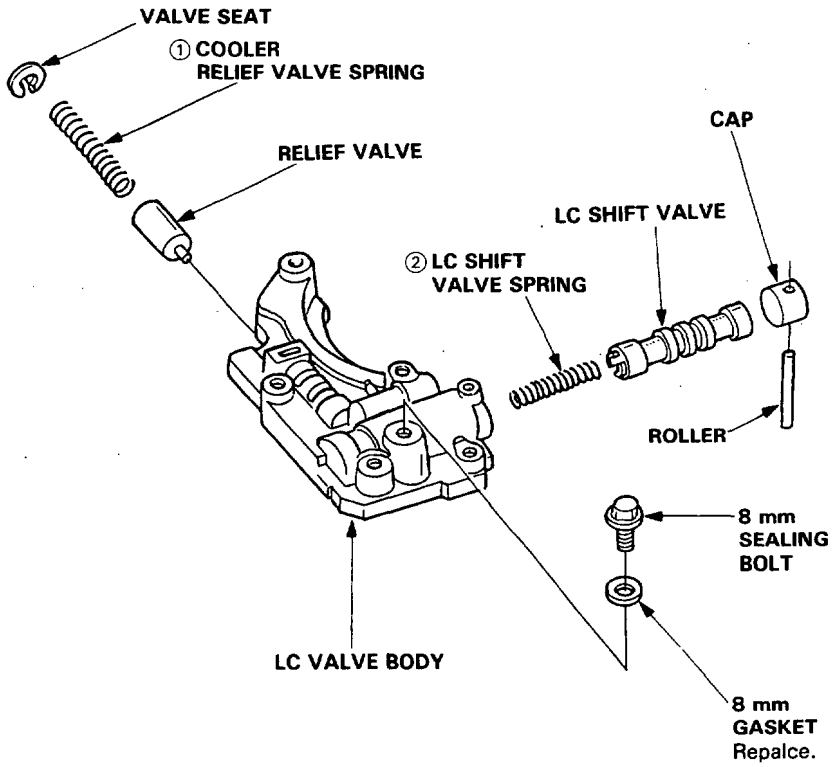

Unit of length: mm (in)

Spring Specifications

No.	Spring	Standard (New)			
		Wire Dia.	O.D.	Free Length	No. of Coils
①	Cooler relief valve spring	1.2 (0.047)	8.4 (0.331)	35.7 (1.406)	16.5
②	Lock-up shift spring	1.1 (0.043)	8.6 (0.339)	51.0 (2.008)	18.6

1st Accumulator/L. Side Cover

Disassembly/Inspection

NOTE:
- Clean all parts thoroughly in solvent or carburetor cleaner, and dry compressed air.
- Blow out all passages.

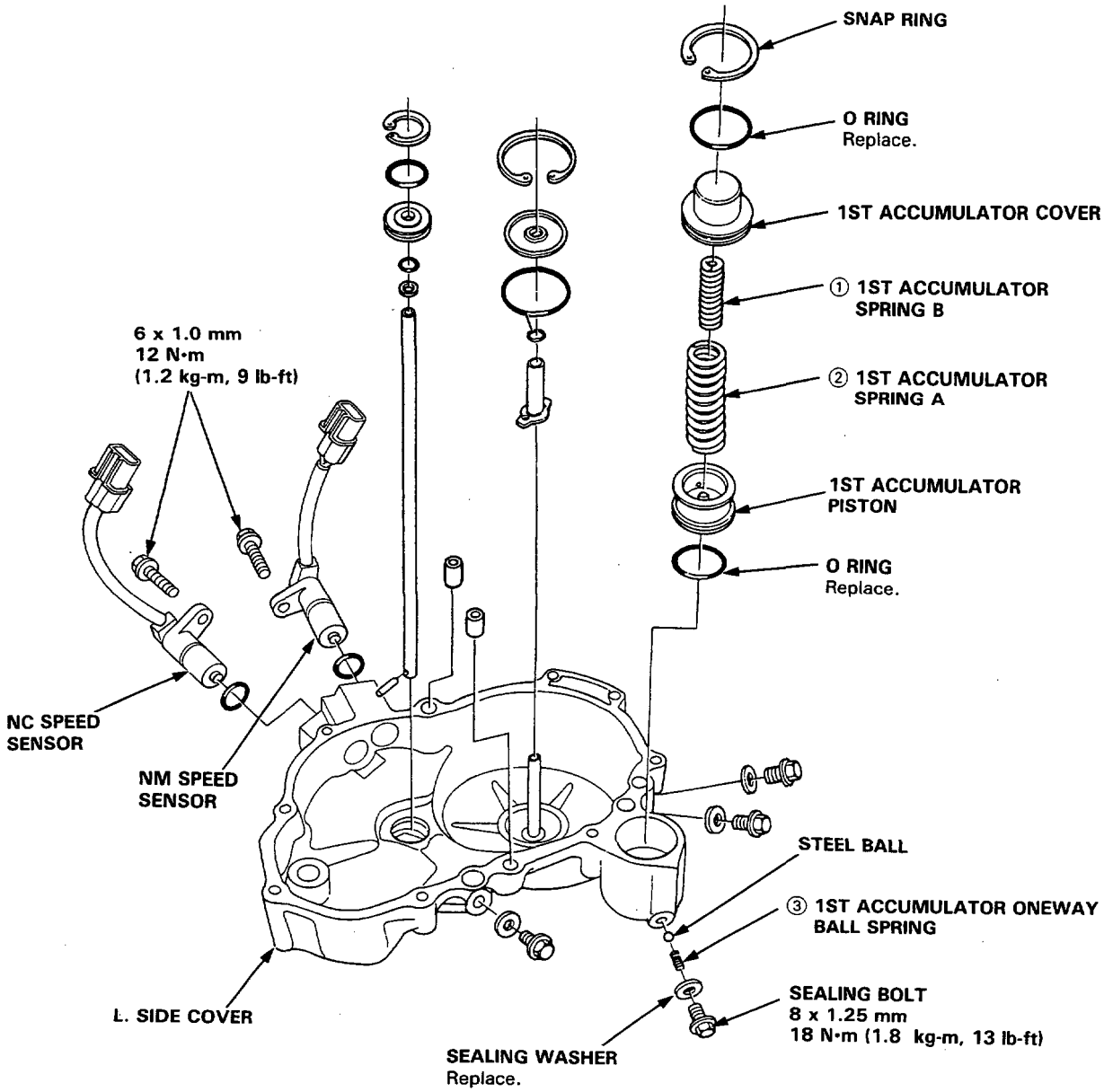

Unit of length: mm (in)

Spring Specifications

No.	Spring	Standard (New)			
		Wire Dia.	O.D.	Free Length	No. of Coils
①	1st accumulator spring B	2.3 (0.091)	12.1 (0.476)	40.0 (1.575)	7.4
②	1st accumulator spring A	2.8 (0.110)	21.5 (0.846)	58.5 (2.303)	8.3
③	1st accumulator oneway ball spring	0.29 (0.011)	4.0 (0.157)	14.0 (0.551)	13

Gearshift Selector

Disassembly/Reassembly

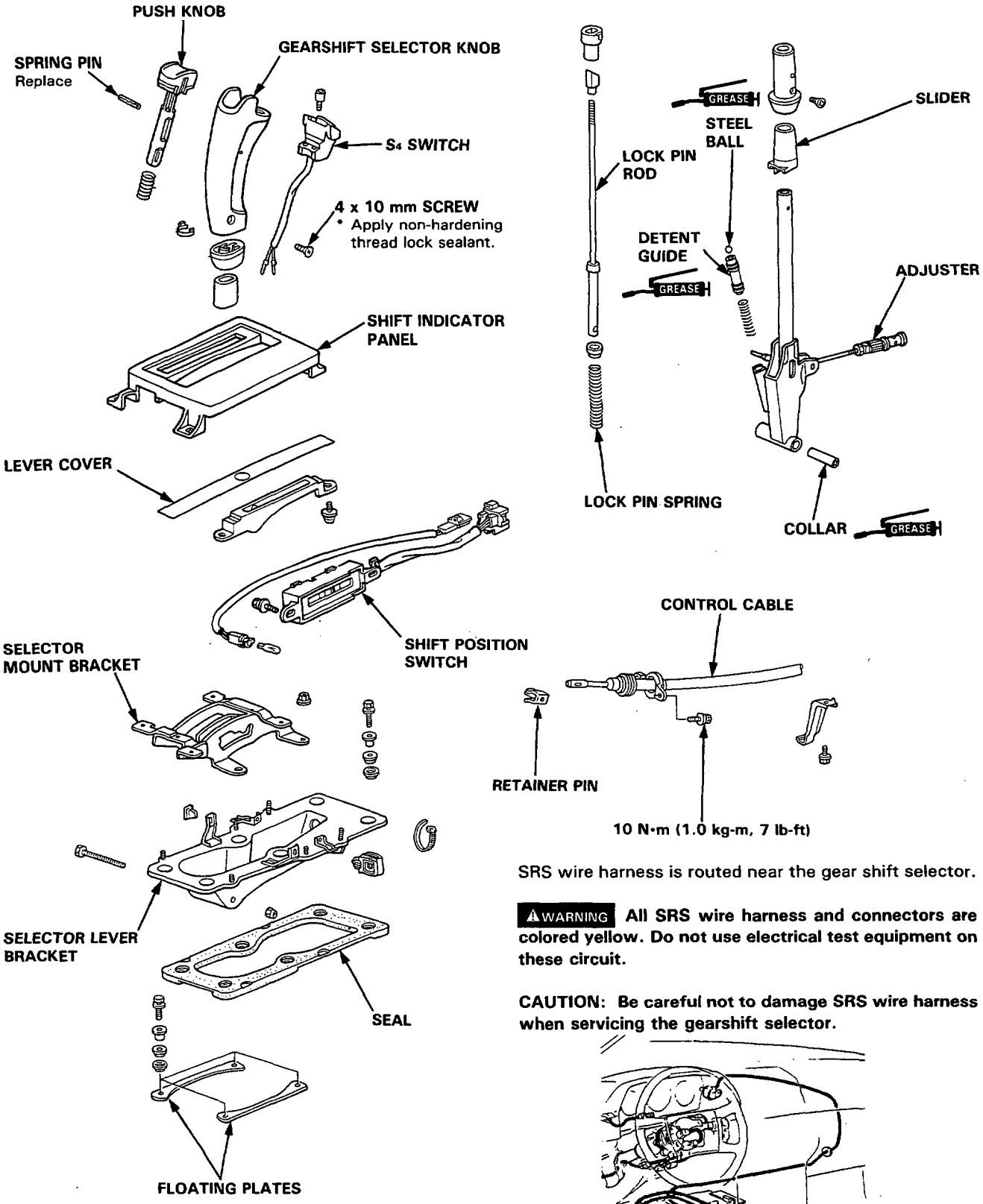

SRS wire harness is routed near the gear shift selector.

WARNING **All SRS wire harness and connectors are colored yellow. Do not use electrical test equipment on these circuit.**

CAUTION: Be careful not to damage SRS wire harness when servicing the gearshift selector.

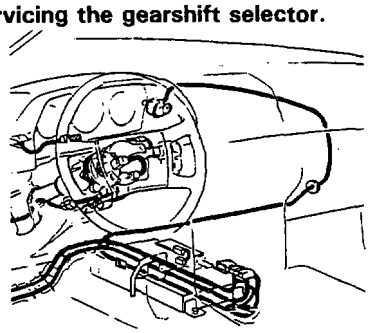

Power Steering

Special Tool 11-1
*Airbag Assembly
Removal 11-2
Installation 11-3
*Column
Removal 11-4
Installation 11-7
*Cable Reel
Removal 11-9
Installation 11-10
*Airbag Assembly Disposal 11-12
*Steering Wheel
Disassembly/Reassembly 11-15
Energy-absorbing
Steering Column 11-16

Outline of Model Changes

- The Supplemental Restraint System (SRS) has been adopted for KE, KF, KB, KG and KX models.
- The energy-absorbing system of the steering column has been modified.

SUPPLEMENTAL RESTRAINT SYSTEM (SRS)

The Legend includes a driver's side Airbag, located in the steering wheel hub, as part of a Supplemental Restraint System (SRS). Information necessary to safely service the SRS is included in this Service Manual. Items marked * in each section include, or are located near, SRS components. Servicing, disassembling or replacing these items will require special caution and tools, and should therefore be done by an authorized HONDA dealer.

⚠WARNING

- **To avoid rendering the SRS inoperative, which can lead to personal injury or death in the event of a severe frontal collision, all maintenance must be performed by an authorized HONDA dealer.**
- **Improper maintenance, including incorrect removal and installation of the SRS, can lead to personal injury caused by unintentional activation of the Airbag.**
- **All SRS electrical wiring harnesses are covered with yellow outer insulation and related components are located in the steering column, center console, dash, and front fenders. Do not use electrical test equipment on these circuits.**

Special Tool

Ref. No.	Tool Number	Description	Q'ty	Remark
①	07HAZ–SG00400	Deployment Tool	1	

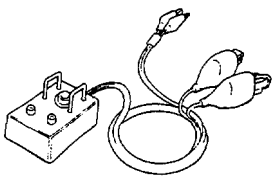

①

Airbag Assembly

Removal

⚠WARNING Store a removed airbag assembly with the pad surface up, if the airbag is improperly stored face down, accidental deployment could propel the unit with enough force to cause serious injury.

CAUTION :

- **Do not install used SRS parts from another car. When repairing, use only new SRS parts.**
- **Carefully inspect the airbag assembly before installing. Do not install an airbag assembly that shows signs of being dropped or improperly handled, such as dents, cracks or deformation.**
- **Always keep the short connector on the airbag connector when the harness is disconnected.**
- **Do not disassemble or tamper with the airbag assembly.**

1. Disconnect both the negative cable and positive cable from the battery.

2. Remove maintenance lid A below the airbag, then remove the short connector.

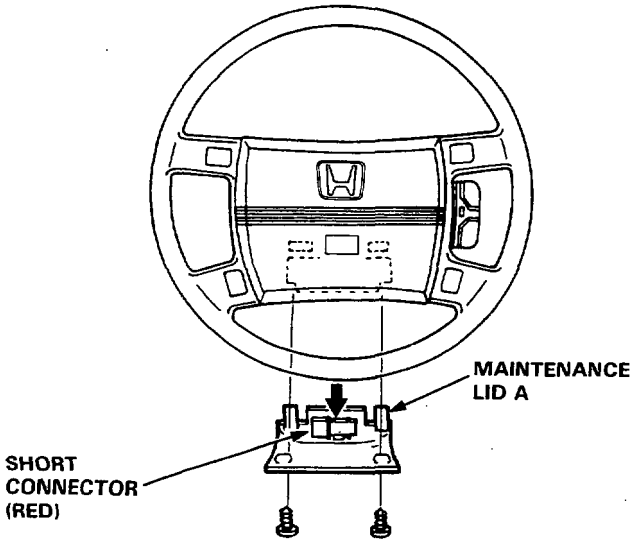

3. Disconnect the connector between the airbag and cable reel.

4. Connect the short connector to the airbag side of the connector.

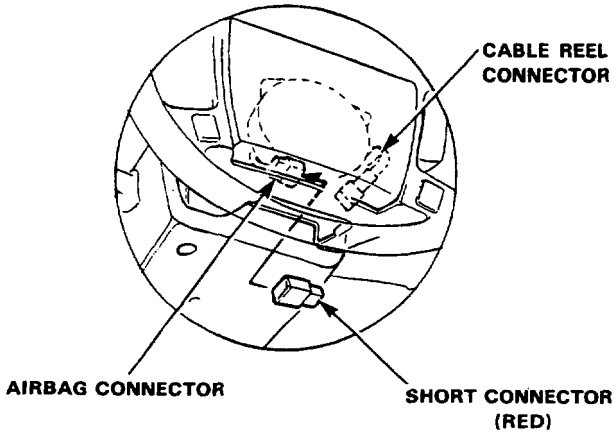

5. Remove maintenance lid B and the cruise control set/resume switch cover.
   Insert a TORX ® T30 bit and remove the two TORX ® bolts, then remove the airbag assembly.

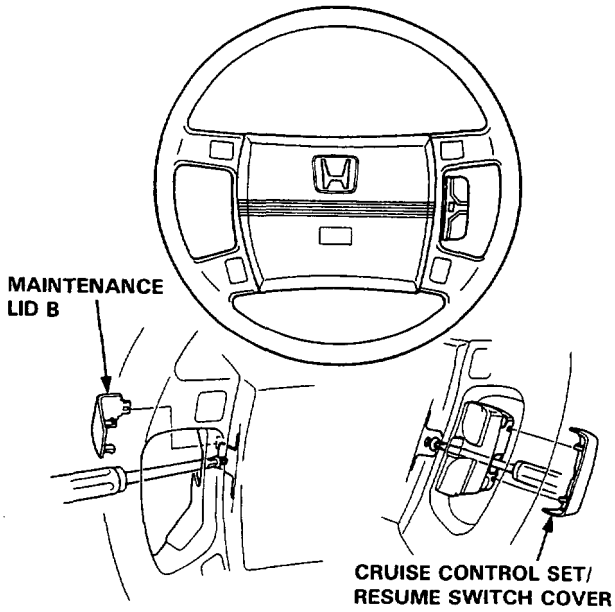

Installation

CAUTION :

- **Be sure to install the SRS wiring so that it is not pinched or interfering with other car parts.**
- **Be sure the battery cables are disconnected.**

1. Place the airbag assembly on the steering wheel, and secure it with new TORX ® bolts.

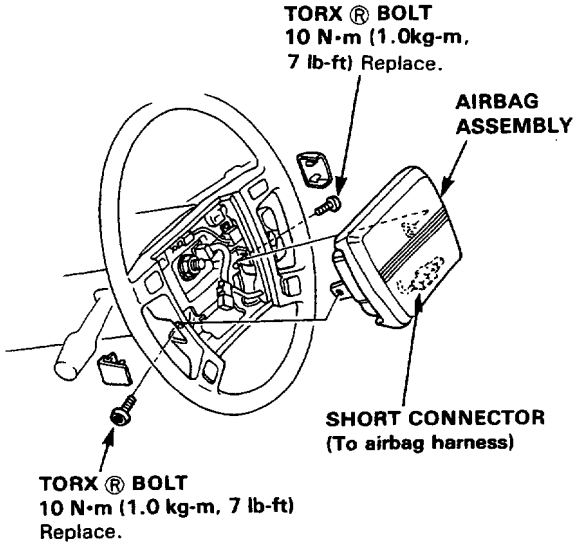

2. Install lid B and the cruise control set/resume switch cover.

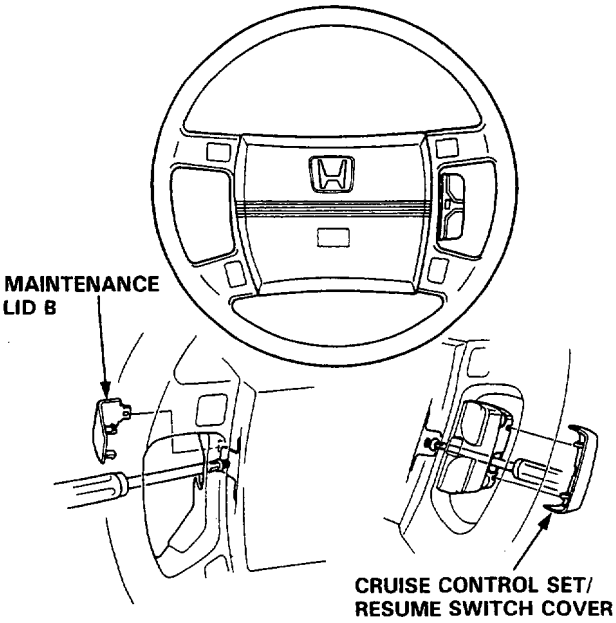

3. Disconnect the short connector from the airbag connector.

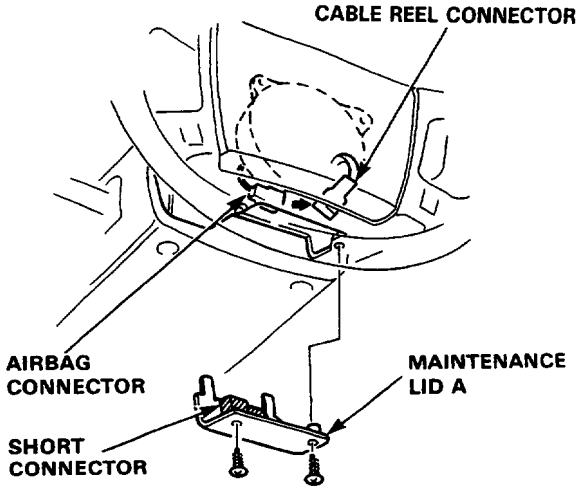

4. Connect the airbag 2-P connector and cable reel 2-P connector.

5. Attach the short connector to lid A and attach to the steering wheel.

6. Connect both the negative and positive cable to the battery.

7. After installing the airbag assembly, confirm proper system operation :

   - Turn on the ignition to II : the instrument panel SRS light should go on for about 8 seconds and then go off.
   - Confirm operation of horn buttons.
   - Confirm operation of cruise control set/resume switch.

Column

Removal

⚠WARNING Store a removed airbag assembly with the pad surface up. If the airbag is improperly stored face down, accidental deployment could propel the unit with enough force to cause serious injury.

CAUTION:

- **Carefully inspect the airbag assembly before installing. Do not install an airbag assembly that shows signs of being dropped or improperly handled, such as dents, cracks or deformation.**
- **Always keep the short connector on the airbag connector when the harness is disconnected.**
- **Do not disassemble or tamper with the airbag assembly.**

1. Disconnect both the negative cable and positive cable from the battery.
2. Make sure the wheels are aligned straight forward.
3. Remove maintenance lid A below the airbag, then remove the short connector.

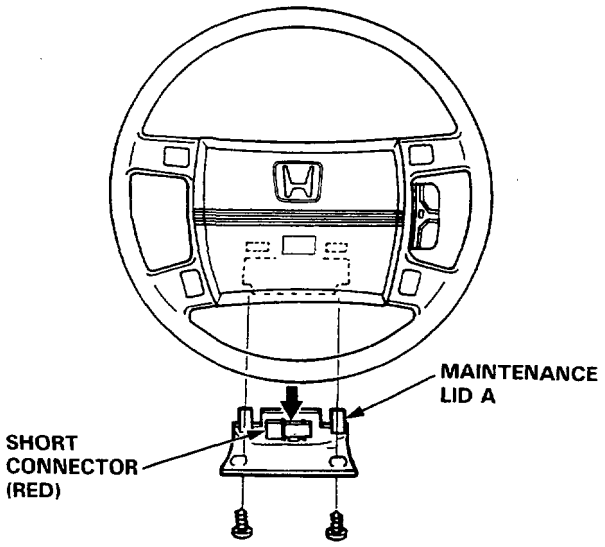

4. Disconnect the connector between the airbag and cable reel.
5. Connect the short connector to the airbag side of the connector.

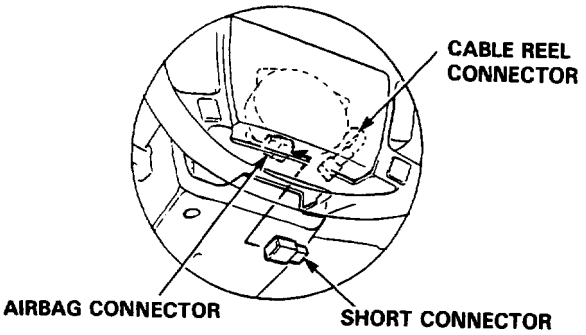

6. Remove maintenance lid B and the cruise control set/resume switch cover.
   Insert a TORX® T30 bit and remove the two TORX® bolts.

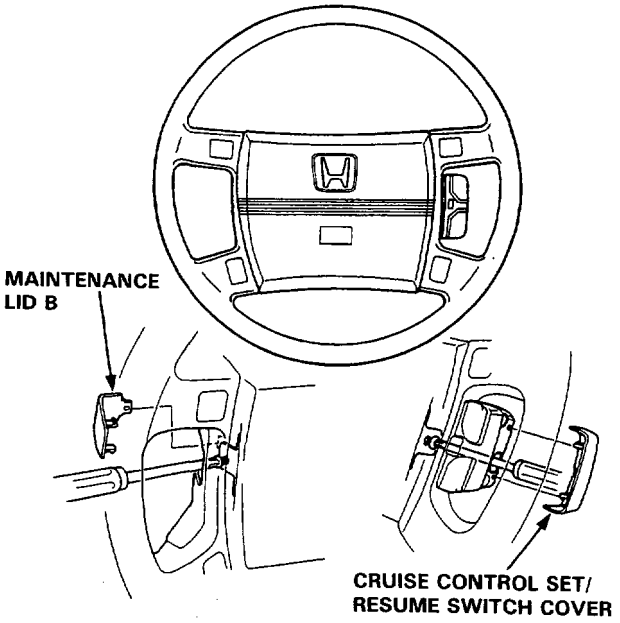

7. Remove the airbag assembly from the steering wheel.

8. Remove the steering wheel nut.

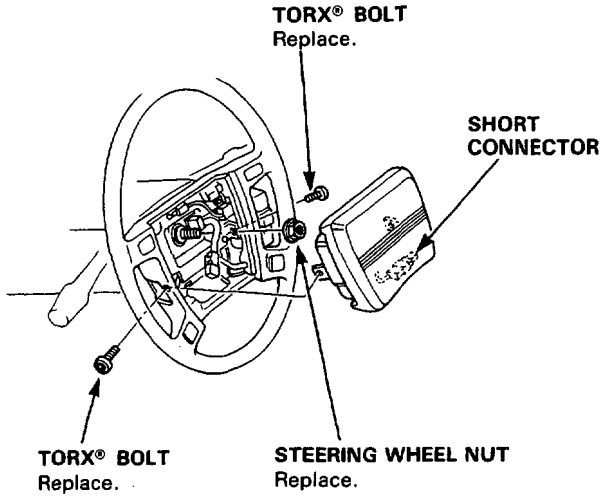

9. Disconnect the connectors for the horn and cruise control set/resume switches and release the airbag connector from its clips.

NOTE: To disconnect the cruise control 3-P connector, release both lock tabs, Ⓐ and Ⓑ.

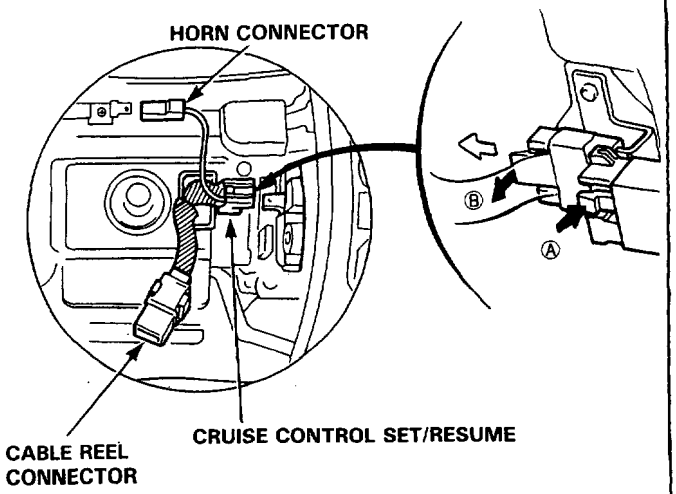

10. Remove the steering wheel from the column.

(cont'd)

Column

Removal (cont'd)

11. Remove the yoke joint cover.
12. Remove the instrument panel lower cover then disconnect the wiper control unit connector.
13. Remove the column cover's maintenance lid.
14. Disconnect the cable reel harness at the connection located on the under side of the steering column.
15. Remove the column B holder.
16. Remove the column mounting nuts (2).
17. Remove the steering yoke joint bolts, and disconnect the yoke joint.
18. Disconnect the harness connectors attached to the column assembly, then remove the column assembly.

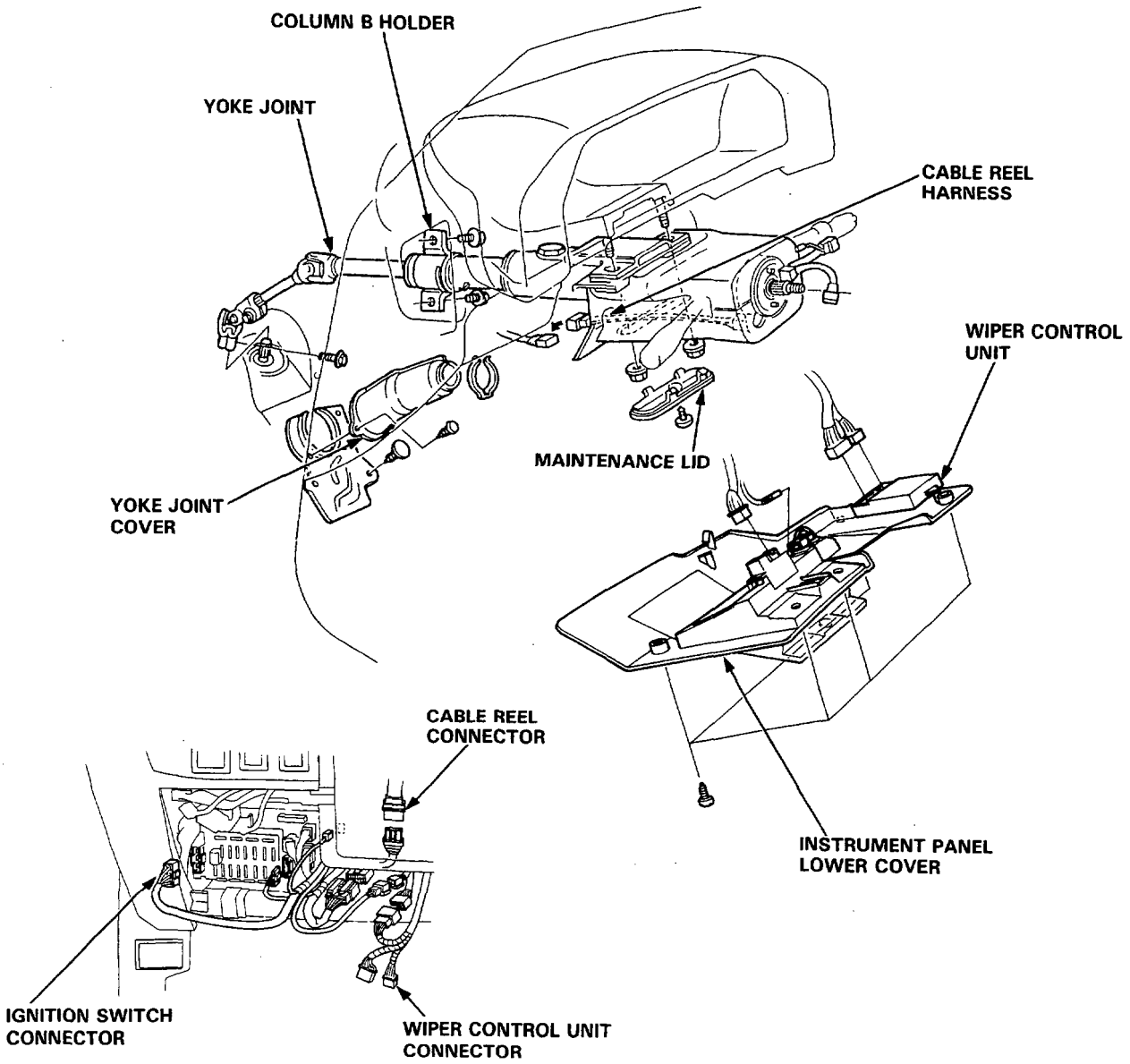

Installation

CAUTION:

- **Before installing the steering wheel, the front wheels should be aligned straight forward.**
- **Be sure to install the harness wires so that they are not pinched or interfering with other car parts.**
- **Do not replace the original steering wheel with any other design, since it will make it impossible to properly install the airbag.**
  (only use genuine HONDA replacement parts)
- **After reassembly confirm that the wheels are still straight ahead and that steering wheel spoke angle is correct. If minor spoke angle adjustment is necessary, do so only by adjustment of the tie rods, not by removing and repositioning the steering wheel.**

1. Connect the steering yoke and install the steering column assembly.

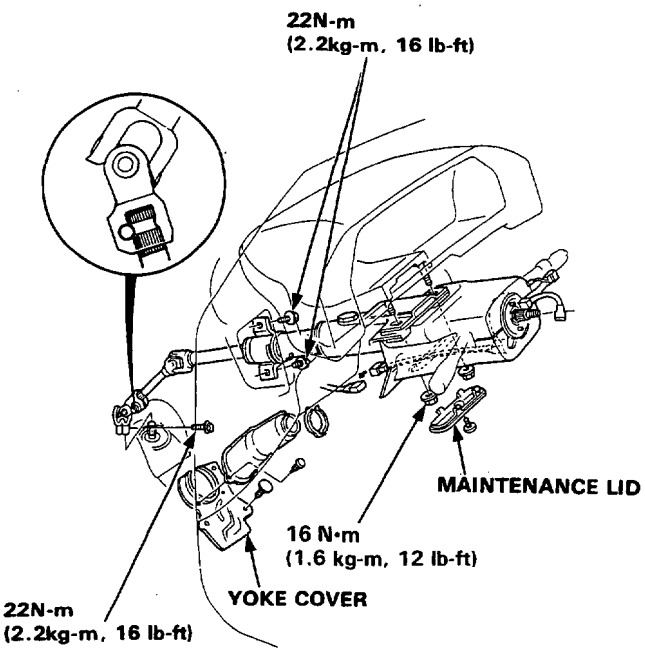

NOTE:

- Be sure that the lower bolt is securely in the groove in the steering gearbox pinion.
- Be sure the pinion shaft and the steering column shaft are aligned; the joint should slip on freely. If not, reposition the steering rack to correct the misalignment.

2. Install the steering column assembly and tighten the attaching bolts and nuts.

3. Install the yoke cover and maintenance lid.

4. Center the cable reel.

   Do this by first rotating the cable reel clockwise until it stops.
   Then rotate it counterclockwise (approximately two turns) until :

   - The yellow gear tooth lines up with the mark on the cover.
   - The arrow on the cable reel label points straight up.

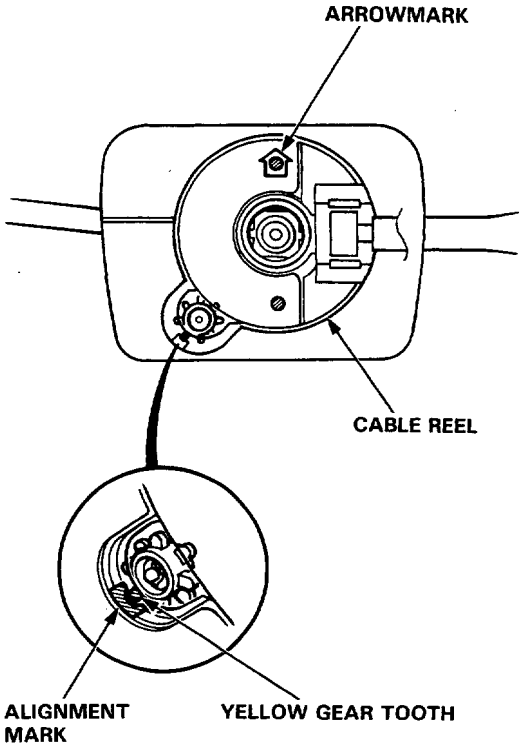

(cont'd)

Installation (cont'd)

5. Install the steering wheel and insert the cruise control set/resume 3-P connector and cable reel connector to the steering wheel clips.

6. Connect the horn connector.

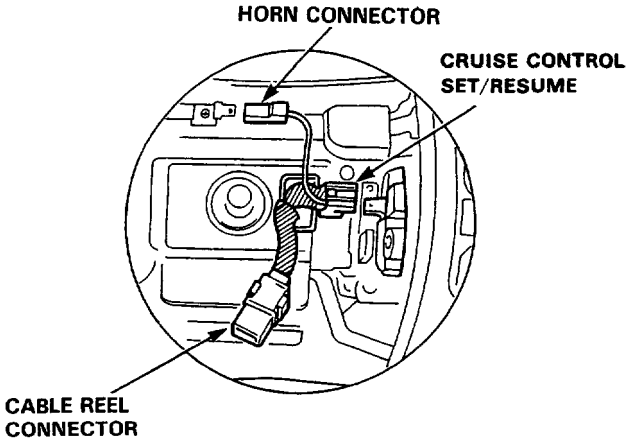

7. Install the steering wheel nut.

8. Install the airbag assembly.

⚠WARNING Confirm that the airbag assembly is securely attached to the steering wheel; otherwise, severe personal injury could result during later airbag deployment.

9. Install the cruise control set/resume switch cover and maintenance lid B.

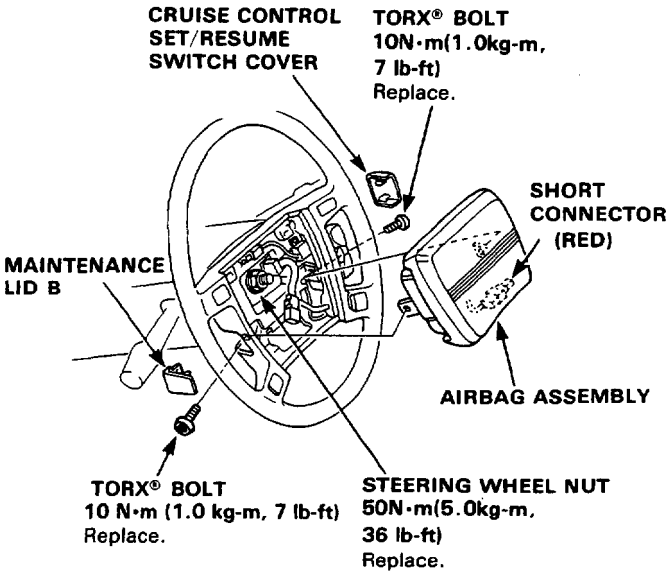

10. Connect the combination switches, ignition switch and cable reel harness.

CAUTION : Be sure to install the harness wires so that they are not pinched by the knee bolster.

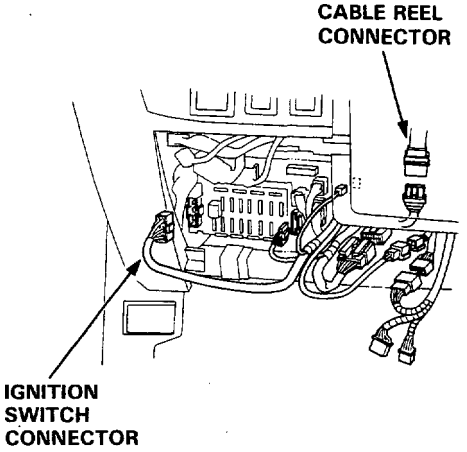

11. Connect the wiper control unit connector to the instrument panel lower cover, then install the lower cover.

12. Disconnect the short connector from the airbag connector and connect the cable reel and airbag harnesses (page 11-3).

13. Reinstall the short connector, then put maintenance lid A back in position.

14. Connect both the negative cable and positive cable to the battery.

15. After installing the steering column assembly, confirm proper system operation :

- Turn on the ignition to II : the instrument panel SRS light should go on for about 8 seconds and then go off.
- Confirm operation of cruise control set/resume switch.
- Confirm operation of horn buttons.
- Comfirm operation of the lighting and wiper switches.
- Check for cable reel alignment (page 11-7).

Cable Reel

Removal

⚠WARNING Store a removed airbag assembly with the pad surface up. If the airbag is improperly stored face down, accidental deployment could propel the unit with enough force to cause serious injury.

CAUTION :

- **Carefully inspect the airbag assembly before installing. Do not install an airbag assembly that shows signs of being dropped or improperly handled, such as dents, cracks or deformation.**
- **Always keep the short connector on the airbag connector when the harness is disconnected.**
- **Do not disassemble or tamper with the airbag assembly.**

1. Disconnect both the negative cable and positive cable from the battery.

2. Make sure the wheels are aligned straight forward.

3. Remove the instrument panel lower cover, then disconnect the wiper control unit connector.

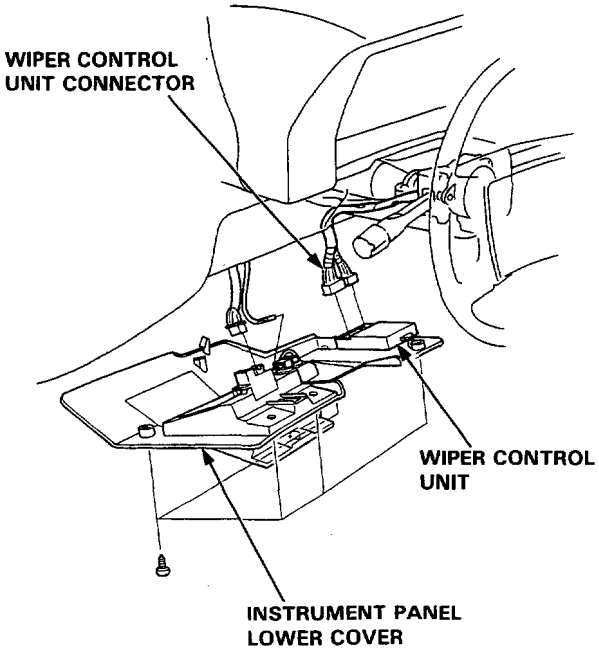

4. Remove the steering wheel maintenance lid A, and disconnect the cable reel harness and airbag assembly 2-P connector. Connect the short connector to the airbag assembly (page 11-2).

5. Remove the upper and lower column covers.

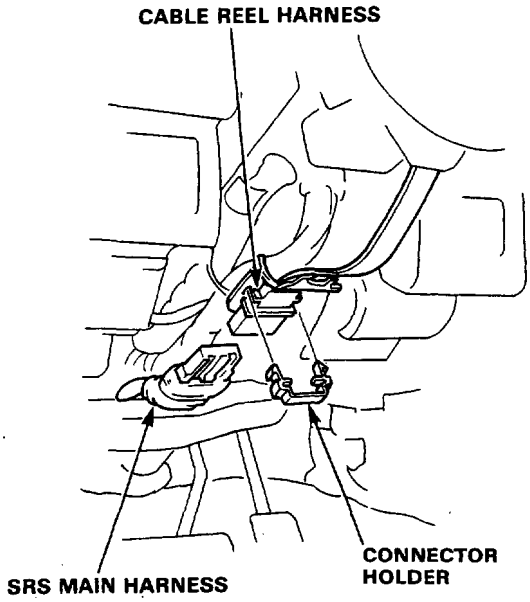

6. Disconnect the connector between the cable reel and the SRS main harness, then remove the connector holder.

7. Remove maintenance lid B and cruise control set/resume switch cover (page 11-2).

8. Remove the airbag assembly from the steering wheel, then remove the steering wheel nut (page 11-5).

(cont'd)

Cable Reel

Removal (cont'd)

9. Disconnect the connectors from the horn and cruise control set/resume switches; remove the cable reel connector from its clips.

   NOTE: To disconnect the cruise control 3-P connector, release both lock tabs, Ⓐ and Ⓑ.

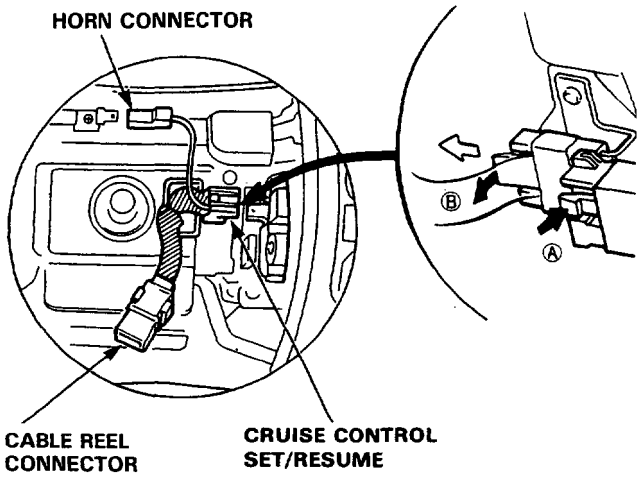

10. Remove the steering wheel from the column.

11. Remove the steering column upper and lower covers.

12. Remove the cable reel and cancel sleeve.

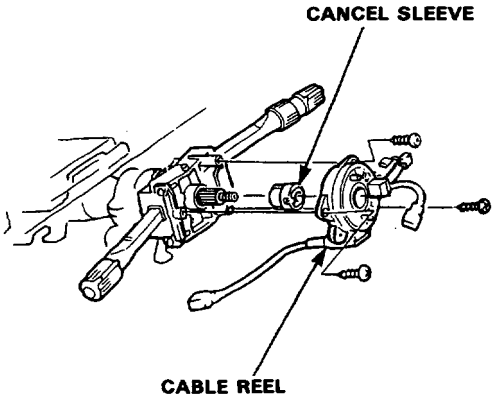

Installation

CAUTION :

- **Before installing the steering wheel, the front wheels should be aligned straight forward.**
- **Be sure to install the harness wires so that they are not pinched or interfering with other car parts.**
- **After reassembly, confirm that the wheels are still straight ahead and that steering wheel spoke angle is correct. If minor spoke angle adjustment is necessary do so only by adjustment of the tierods, not by removing and repositioning the steering wheel.**

1. Align the cancel sleeve grooves with the cable reel projections.

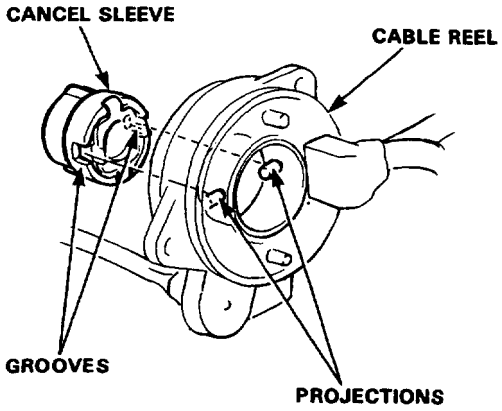

2. Carefully install the cable reel and the cancel sleeve to the steering column shaft.

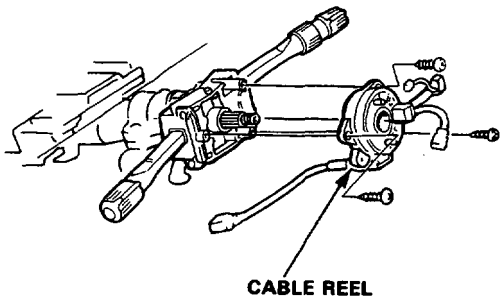

Cable Reel

Removal (cont'd)

9. Disconnect the connectors from the horn and cruise control set/resume switches; remove the cable reel connector from its clips.

   NOTE: To disconnect the cruise control 3-P connector, release both lock tabs, Ⓐ and Ⓑ.

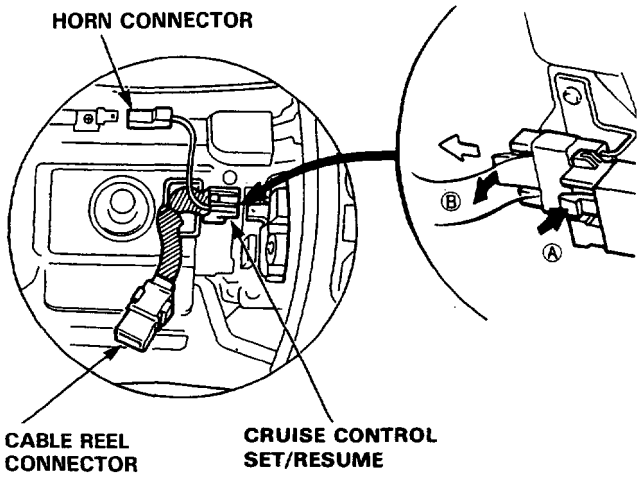

10. Remove the steering wheel from the column.

11. Remove the steering column upper and lower covers.

12. Remove the cable reel and cancel sleeve.

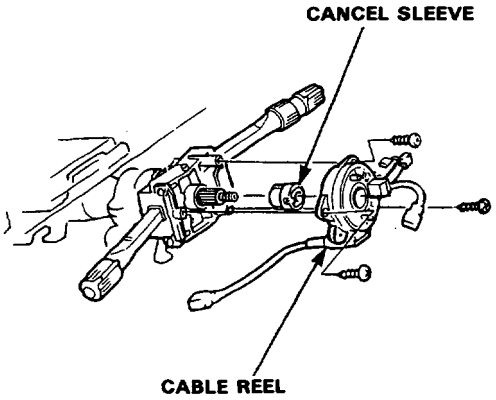

Installation

CAUTION :

- **Before installing the steering wheel, the front wheels should be aligned straight forward.**
- **Be sure to install the harness wires so that they are not pinched or interfering with other car parts.**
- **After reassembly, confirm that the wheels are still straight ahead and that steering wheel spoke angle is correct. If minor spoke angle adjustment is necessary do so only by adjustment of the tierods, not by removing and repositioning the steering wheel.**

1. Align the cancel sleeve grooves with the cable reel projections.

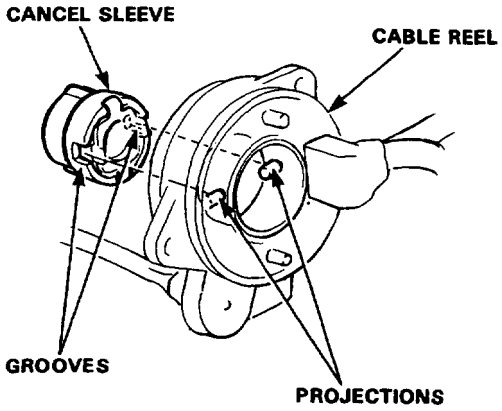

2. Carefully install the cable reel and the cancel sleeve to the steering column shaft.

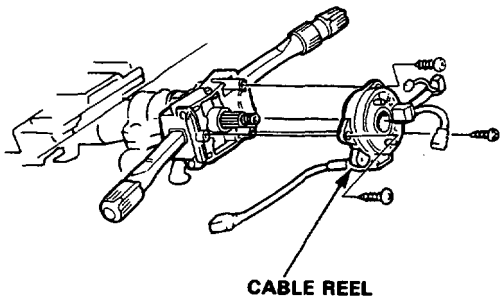

3. Install the steering column upper and lower covers.

4. Center the cable reel.
   Do this by first rotating the cable reel clockwise until it stops.
   Then rotate it counterclockwise (approximately two turns) until :
   - The yellow gear tooth lines up with the mark on the cover.
   - The arrow on the cable reel label points straight up.

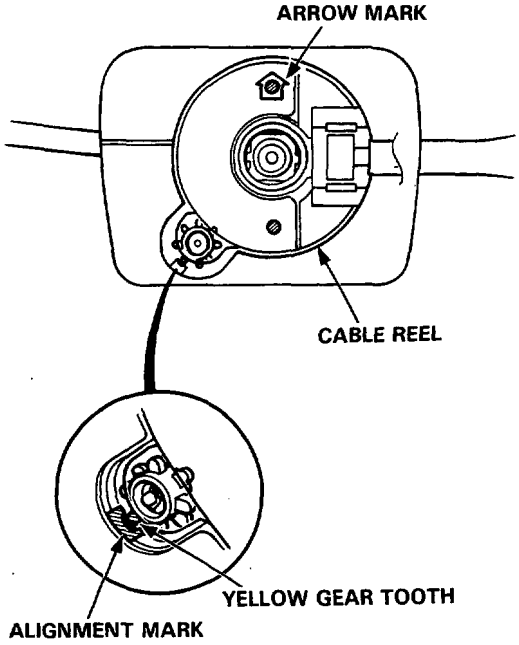

5. Install the steering wheel and insert the cruise control set/resume 3-P connector and cable reel connector to the steering wheel clips.

6. Connect the horn connector.

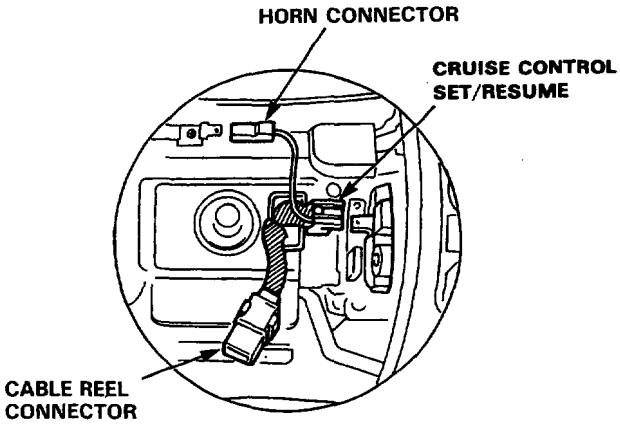

7. Install the steering wheel nut.

8. Install the airbag assembly (page 11-3).

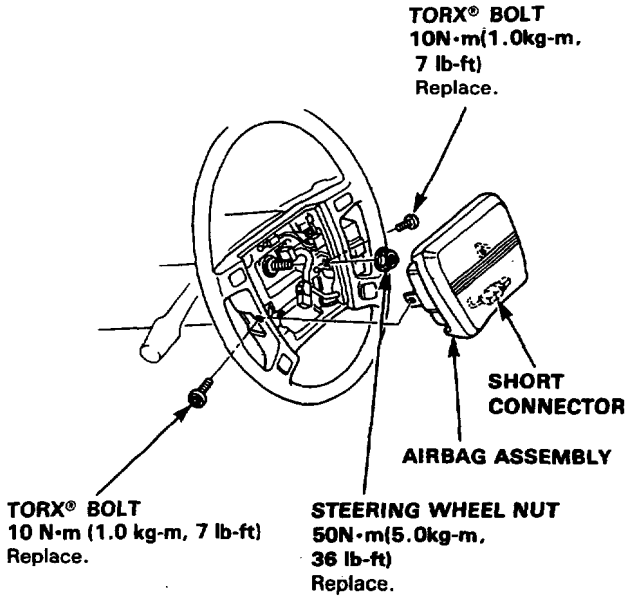

9. Connect the harness from the cable reel to the SRS main harness below the pedal bracket, then attach the connector holder to the steering column.

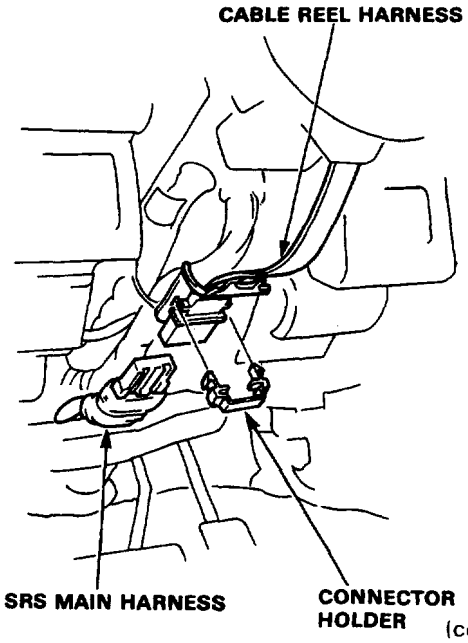

(cont'd)

Cable Reel

Installation (cont'd)

10. Connect the wiper control unit harness to the control unit attached to the instrument panel lower cover, then install the lower cover.

11. Disconnect the short connector from the airbag connector and connect the cable reel and airbag harnesses (page 11-3).

    NOTE: Attach the short connector to lid A and attach to the steering wheel.

12. Connect both the negative cable and positive cable to the battery.

13. After installing the cable reel, confirm proper system operation :
    - Turn on the ignition to II ; the instrument panel SRS light should go on for about 8 seconds and then go off.
    - Confirm operation of horn buttons.
    - Confirm operation of the lighting and wiper switches.
    - Confirm operation of cruise control set/resume switch.
    - Rotate the steering wheel counterclockwise until the yellow gear tooth lines up with the slot on the cover.

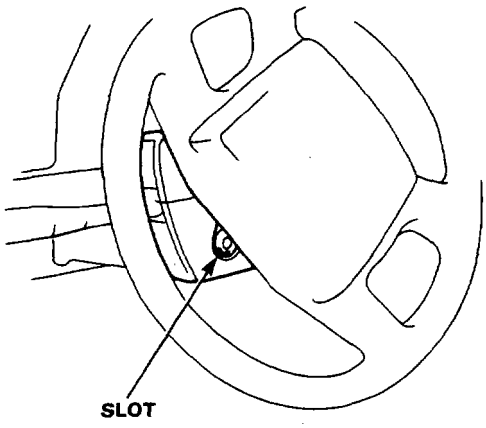

Airbag Assembly Disposal

Before scrapping any airbag assembly (including one in a whole car to be scrapped) the airbag must be deployed.
If the car is still within the warranty period, before deploying the airbag, the HONDA dealer District Service Manager must give approval and/or special instructions.
Only after the airbag is already deployed (as the result of vehicle collision, for example) can the normal scrapping procedure below.
If the airbag appears intact (not deployed) it should be treated with extreme caution.
Follow the procedure, described below.

Airbag Deployment: In-Car

NOTE : If an SRS car containing an intact airbag is to be entirely scrapped, the airbag should be deployed while still in the car.
It should not be considered a salvageable part and should never be installed in another car.

⚠WARNING Confirm that the airbag assembly is securely attached to the steering wheel; otherwise. severe personal injury could result during later airbag deployment.

1. Disconnect both the negative cable and positive cable from the battery.
2. Confirm that the special tool is functioning properly by following the check Procedure on the label of the Tool set box, or on next page.
3. Remove maintenance lid A, below the airbag assembly.

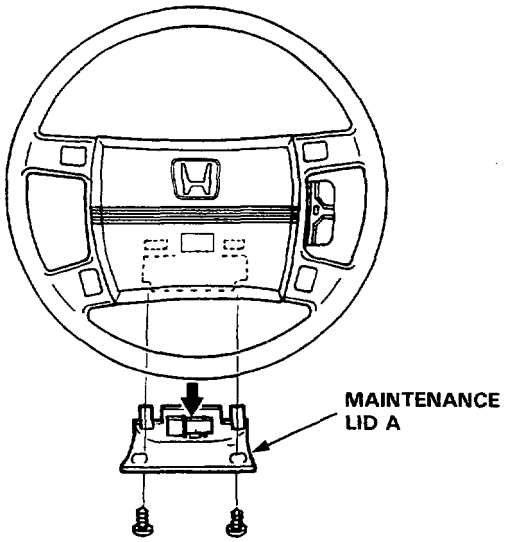

Cable Reel

Installation (cont'd)

10. Connect the wiper control unit harness to the control unit attached to the instrument panel lower cover, then install the lower cover.

11. Disconnect the short connector from the airbag connector and connect the cable reel and airbag harnesses (page 11-3).

    NOTE: Attach the short connector to lid A and attach to the steering wheel.

12. Connect both the negative cable and positive cable to the battery.

13. After installing the cable reel, confirm proper system operation :
    - Turn on the ignition to II ; the instrument panel SRS light should go on for about 8 seconds and then go off.
    - Confirm operation of horn buttons.
    - Confirm operation of the lighting and wiper switches.
    - Confirm operation of cruise control set/resume switch.
    - Rotate the steering wheel counterclockwise until the yellow gear tooth lines up with the slot on the cover.

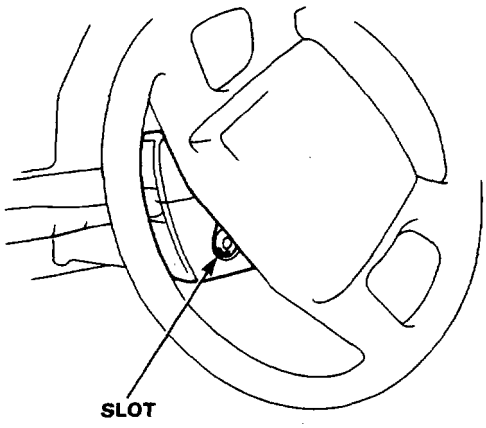

Airbag Assembly Disposal

Before scrapping any airbag assembly (including one in a whole car to be scrapped) the airbag must be deployed.
If the car is still within the warranty period, before deploying the airbag, the HONDA dealer District Service Manager must give approval and/or special instructions.
Only after the airbag is already deployed (as the result of vehicle collision, for example) can the normal scrapping procedure below.
If the airbag appears intact (not deployed) it should be treated with extreme caution.
Follow the procedure, described below.

Airbag Deployment: In-Car

NOTE : If an SRS car containing an intact airbag is to be entirely scrapped, the airbag should be deployed while still in the car.
It should not be considered a salvageable part and should never be installed in another car.

⚠WARNING Confirm that the airbag assembly is securely attached to the steering wheel; otherwise. severe personal injury could result during later airbag deployment.

1. Disconnect both the negative cable and positive cable from the battery.
2. Confirm that the special tool is functioning properly by following the check Procedure on the label of the Tool set box, or on next page.
3. Remove maintenance lid A, below the airbag assembly.

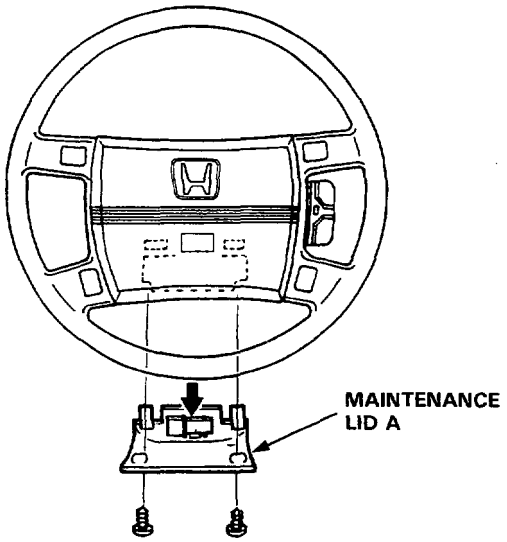

4. Disconnect the connector between the airbag and cable reel.

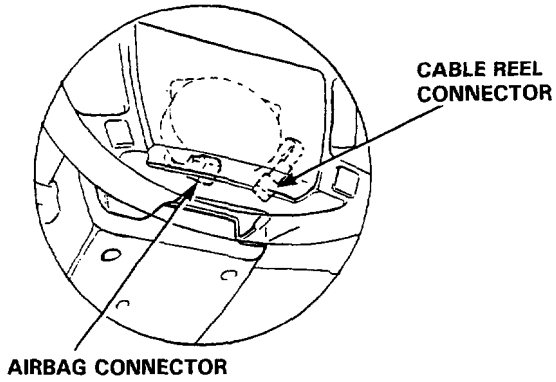

5. Cut off airbag connector and connect the special tool alligator clips to the airbag, and place the special tool approximately thirty feet away from the airbag.

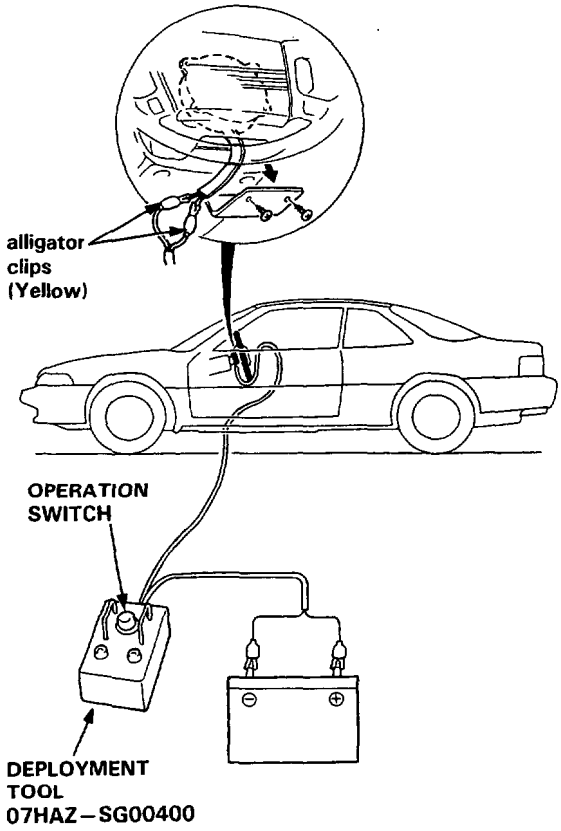

6. Connect a 12 volt battery to the tool:
   - If the green light on the tool goes on, the airbag igniter circuit is defective and cannot be deployed. Go to Damaged Airbag Special Procedure.
   - If the red light on the tool goes on, the airbag is ready to be deployed.

7. Push the tool's deployment switch. The airbag should deploy (deployment is both highly audible and visible – a loud noise and rapid inflation of the bag, followed by slow deflation of the bag until it hangs loosely).

   - If audible/visible deployment happens and the green light on the tool goes on, continue with this procedure.
   - If deployment does not happen, yet the green light goes ON, the airbag igniter is defective and cannot be deployed.
     Go to Damaged Airbag Special Procedure.

⚠WARNING During deployment, the airbag assembly can become hot enough to burn you. Wait thirty minutes after deployment before touching the assembly.

8. Dispose of the complete airbag assembly.
   No part of it can be re-used.

Airbag Deployment: Out-of-car.

NOTE: If an intact airbag assembly has been removed from a scrapped car or has been found defective or damaged during transit, storage or service, it should be deployed as follows:

⚠WARNING Position the airbag assembly face up, outdoors on flat ground at least thirty feet from any obstacles or people.

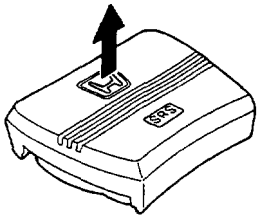

1. Confirm that the special tool is functioning properly by following the check procedure on this page or the tool's label of the Tool Box.
2. Disconnect the short connector from the airbag harness.
   Follow the remaining steps 5,6,7 and 8 of the in-car deployment procedure.

(cont'd)

Airbag Assembly Disposal

(cont'd)

Damaged Airbag Special Procedure.

⚠WARNING If an airbag assembly cannot be deployed, it should not be treated as normal scrap ; it should still be considered a potentially explosive device that can cause serious injury.

1. If installed in a car, follow the removal procedure on page 11-2.

2. In all cases, make sure a short connector is properly attached to the airbag assembly harness.

3. Package the airbag assembly using exactly the same packaging that a new replacement airbag assembly came in.

4. Mark the outside of the box "DAMAGED AIRBAG-NOT DEPLOYED" so it does not get confused with your parts stock.
   If applicable, also note on the box the VIN of the car from which it was removed.

5. Contact your HONDA dealer District Service Manager for the method and address to return it to HONDA dealer for disposal.

Deployment Tool: Check Procedure.

1. Connect the yellow clips to both switch protector handles on the tool; connect the tool to a battery.

2. Push the operation switch: green means tool is OK; red means tool is faulty.

3. Disconnect the battery and the yellow clips.

Disassembly/Reassembly

⚠WARNING Store a removed airbag assembly with the pad surface up. If the airbag is improperly stored face down, accidental deployment could propel the unit with enough force to cause serious injury.

CAUTION:
- Carefully inspect the airbag assembly before installing. Do not install an airbag assembly that shows signs of being dropped or improperly handlied, such as dents, craks or deformation.
- Always keep the short connector on the airbag connector when the harness is disconnected.
- Do not disassemble or tamper with the airbag assembly.

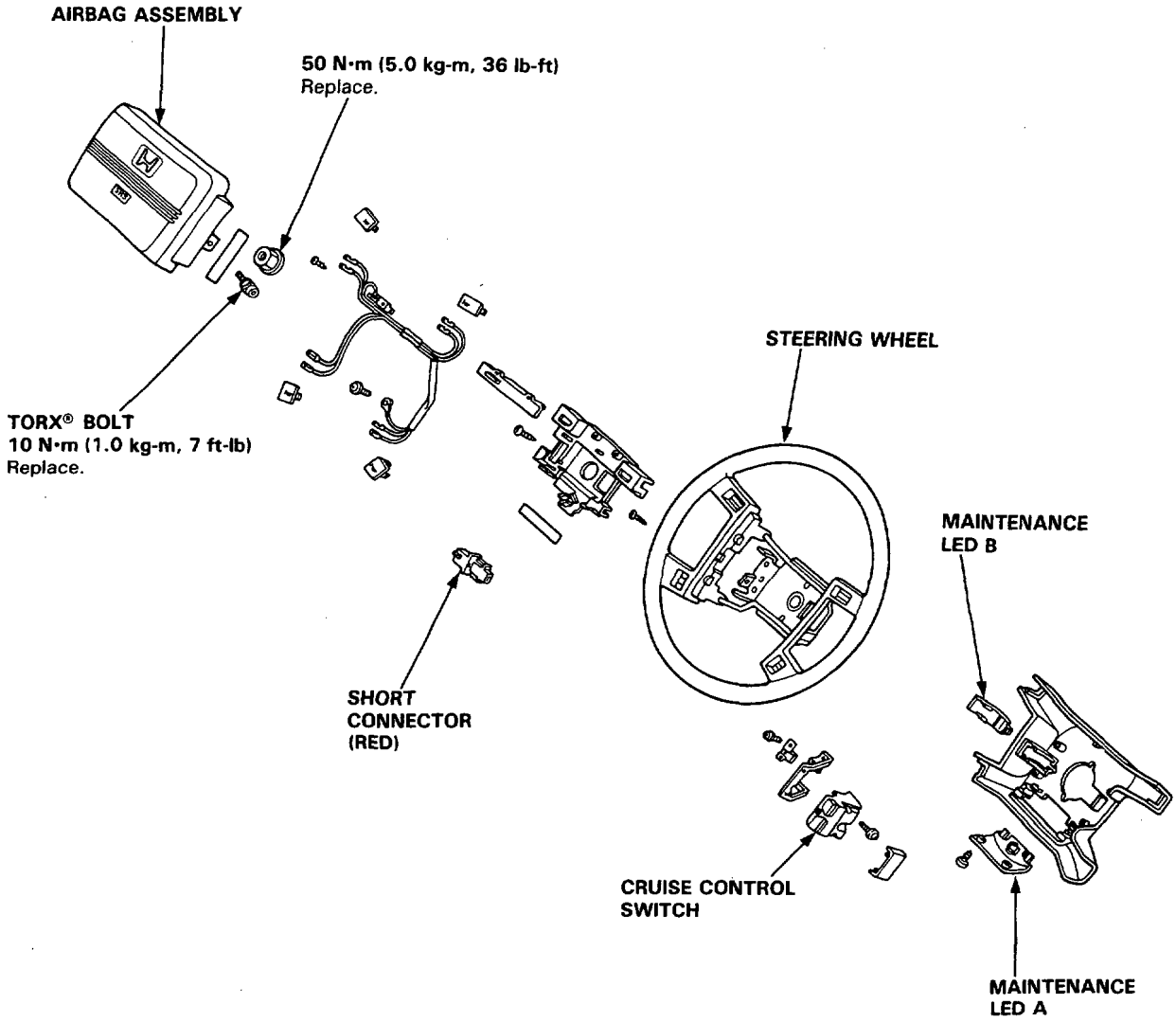

Energy-absorbing Steering Column

Supplemental Restraint System (SRS) model only.

The steering shaft of the steering column is double structured with the lower shaft, integrated with the steering joint, and the upper shaft that are connected with the shear pins.
Ball and needle bearings are used to support the steering shaft to reduce friction and improve steering feel. The steering column pipe is also double structured with the upper column pipe and lower column pipe that are assembled via the ball bearings. The upper column pipe bracket is held by the EAU unit which is secured to the steering hanger stud bolt with the nut. (On collision, the bracket can be slid forward.) The lower column pipe is fixed to the body by the lower holder.

As an external force or impact is applied to the steering wheel, the shear pins break and the upper shaft is forced forward in the lower shaft. The external force or impact is then absorbed as the EAU unit wire is straightened (points of bending are changed) by the upper column pipe of the steering column which slides forward clear of the sliding capsule of the EAU when the external force or impact is applied.

<Under normal condition>

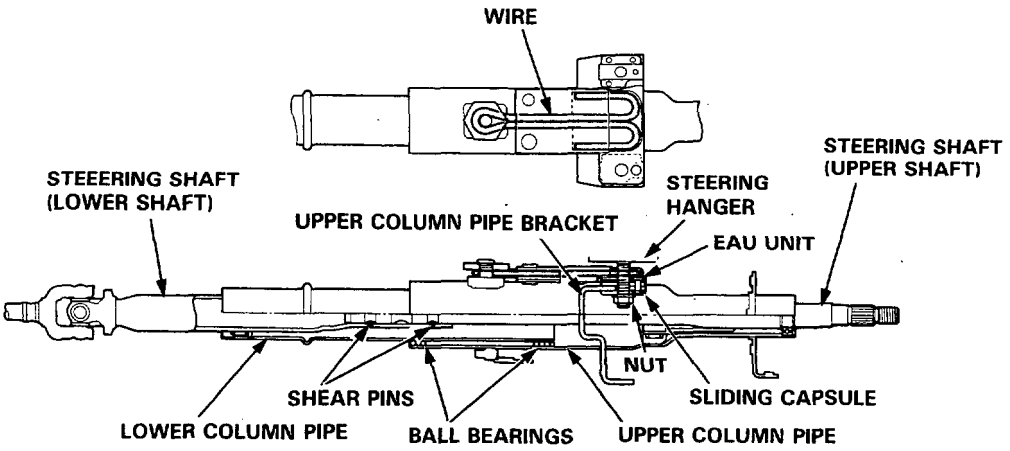

<At time impact>

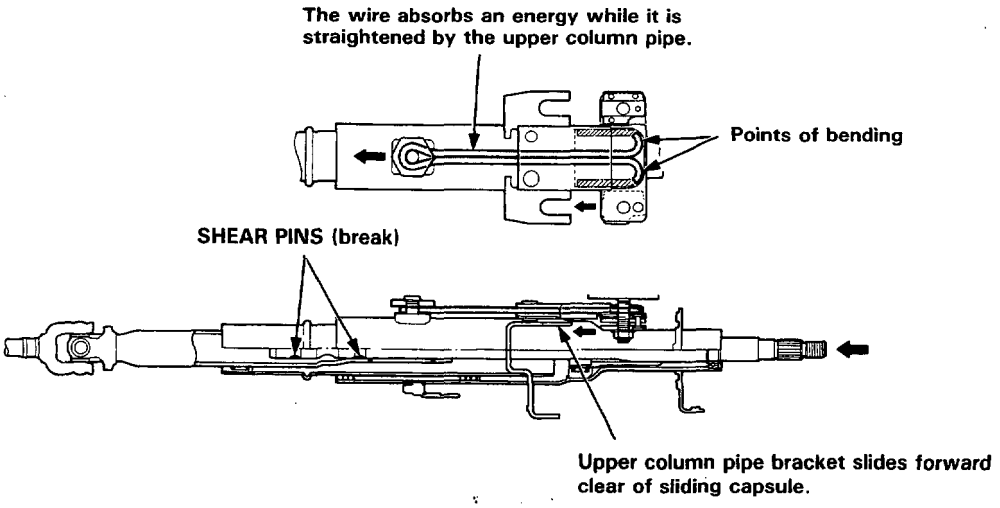

Rear Suspension

Torque Specification

CAUTION:

- **Replace the self-locking nuts after removal.**
- **The vehicle should be on the ground before any bolts or nuts connected to rubber mounts or bushings are tightened.**

NOTE: Wipe off the grease before tightening the nut at the ball joint.

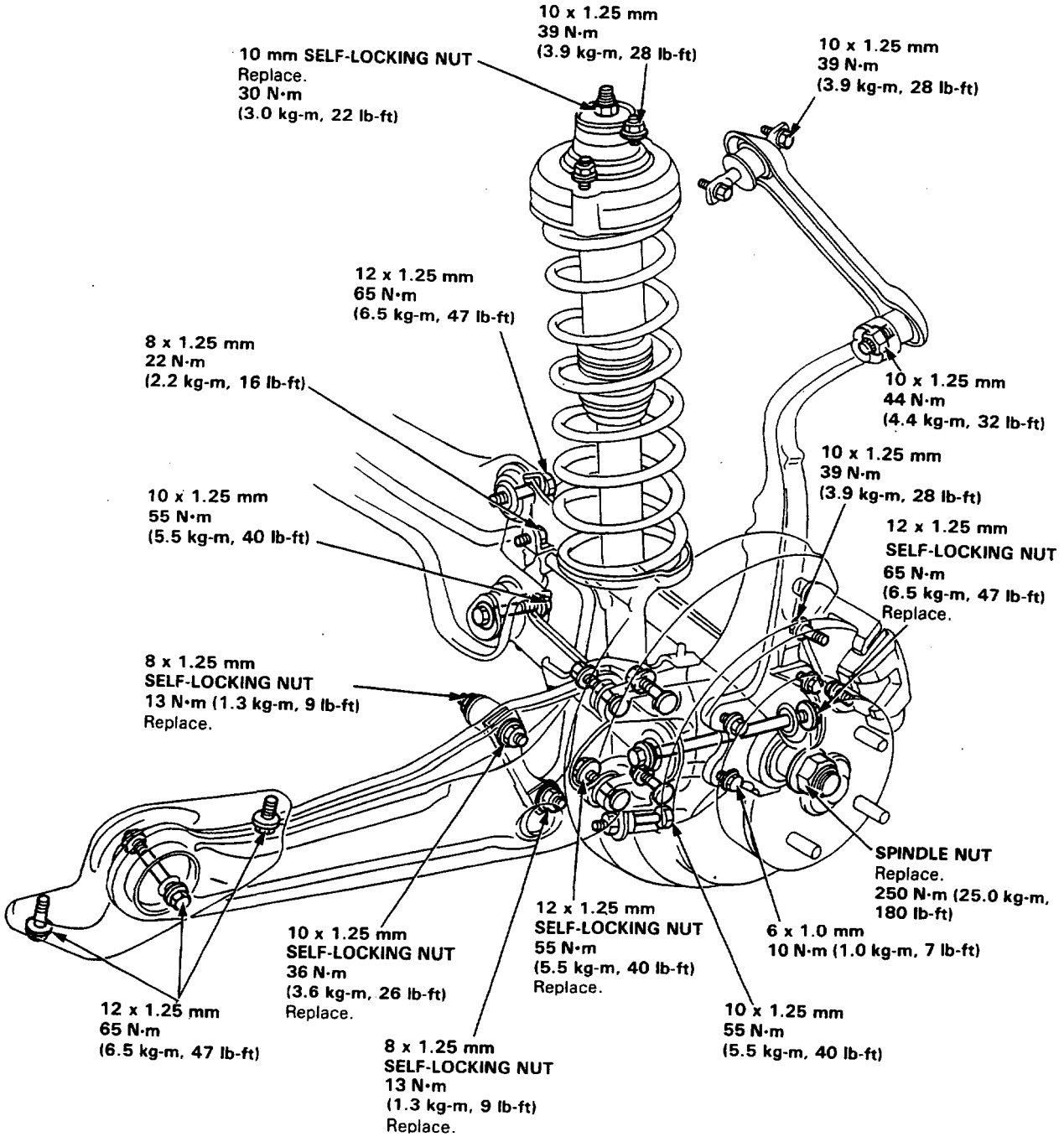

Pulsers/Sensors

Front Sensor Replacement

NOTE:
- Be careful when installing the sensors to avoid twisting the wires using the white line on the wires as guide.
- After sensor replacement confirm proper operation.

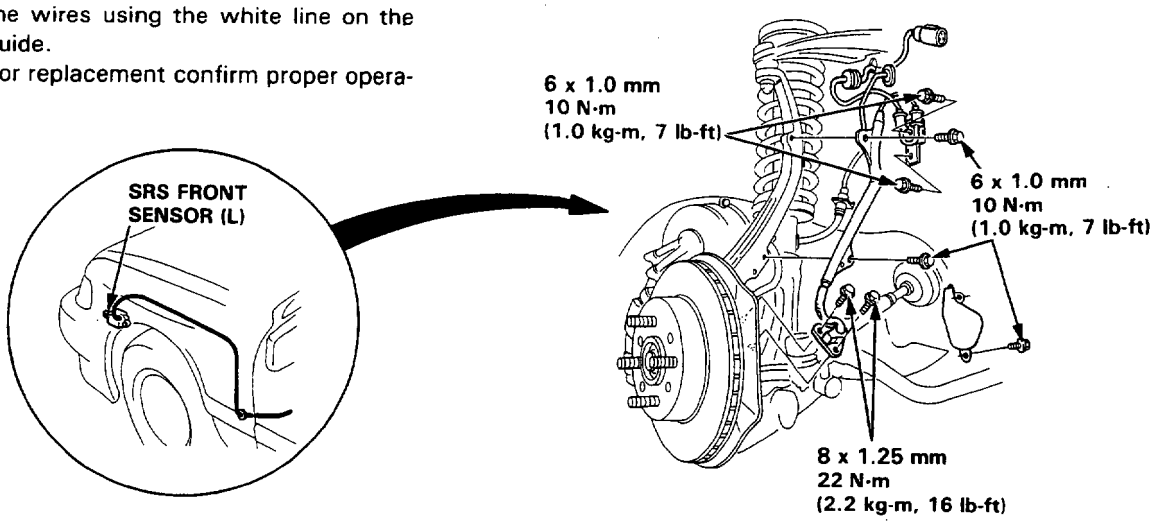

SRS wire harness is routed near the ALB front speed sensors.

⚠WARNING All SRS wire harness and connectors are colored yellow. Do not use electrical test equipment on these circuit.

CAUTION: Be careful not to damage SRS wire harness when servicing the ALB front speed sensors.

Rear Sensor Replacement

NOTE:
- Be careful when installing the sensors to avoid twisting the wires using the white line on the wires as a guide.
- After sensor replacement, confirm proper operation.

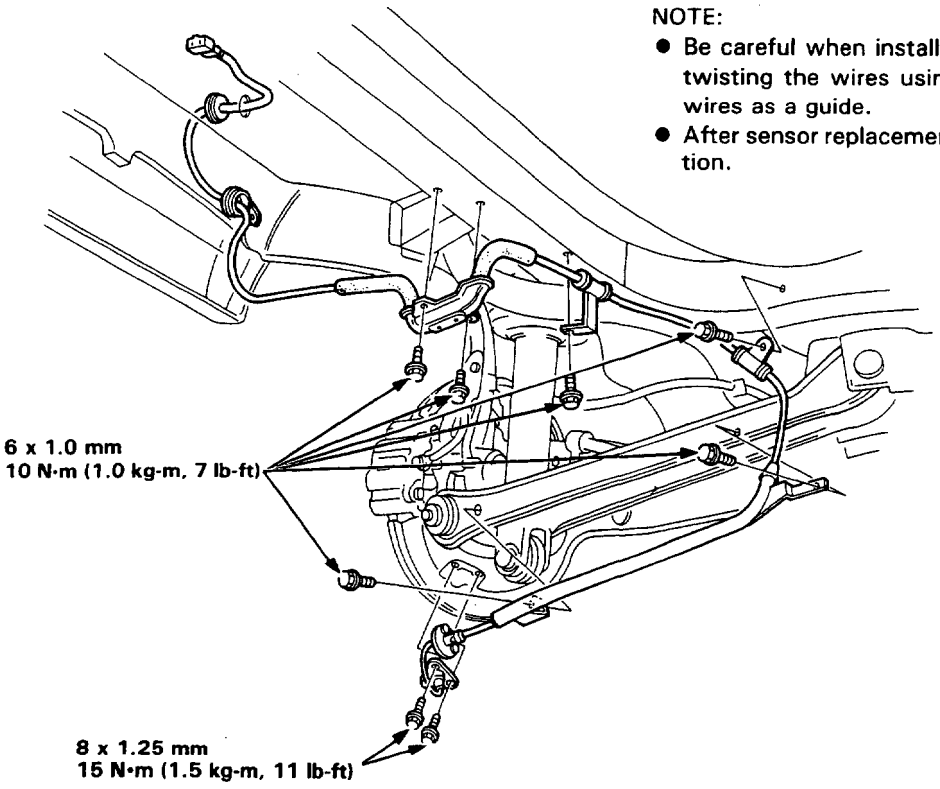

Windshield

Broken Glass Removal

SRS wire harness is routed near the carpet.

⚠WARNING All SRS wire harness and connectors are colored yellow. Do not use electrical test equipment on these circuit.

CAUTION: Be careful not to damage SRS wire harness when the broken glass removal.

Remove as much broken glass as possible with a vacuum cleaner.
Blow out the glass in the heater and behind the dashboard with low pressure compressed air:

⚠WARNING Wear eye protection while using the air gun.

1. Set the temperature control dial to COLD.
2. Push the HEAT button on the function panel.
3. Make sure the recirculation button is off.
4. Blow compressed air through the defroster center vent outlet.
5. Remove the A/C evaporator and remove any glass from the air mix chamber.
6. Remove any glass from the top of the vent/defrost door.
7. Remove any glass from the top and bottom of the carpet and seats with a vacuum cleaner.

NOTE: You should remove the seats and shake them to get rid of loose remove any glass.

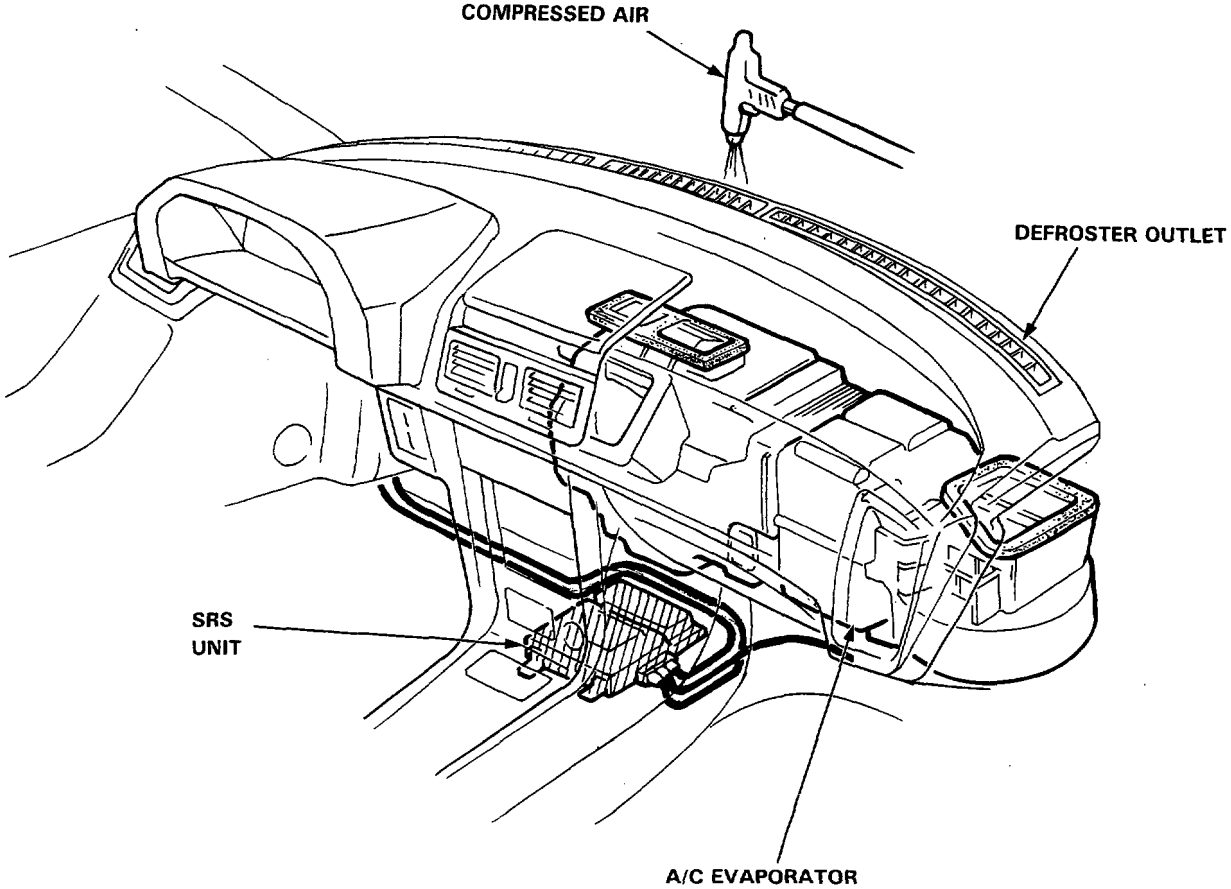

Front Disassembly

Disassemble in numbered sequence.

NOTE:
- When removing the seat back, detach the clips underneath the trim cover and pull the cover back enough so the bolts are visible.
- To attach the seat back, follow the steps for removal in reverse.
- Before installing the seat, make sure there are no twists or pinch in the seat wire.

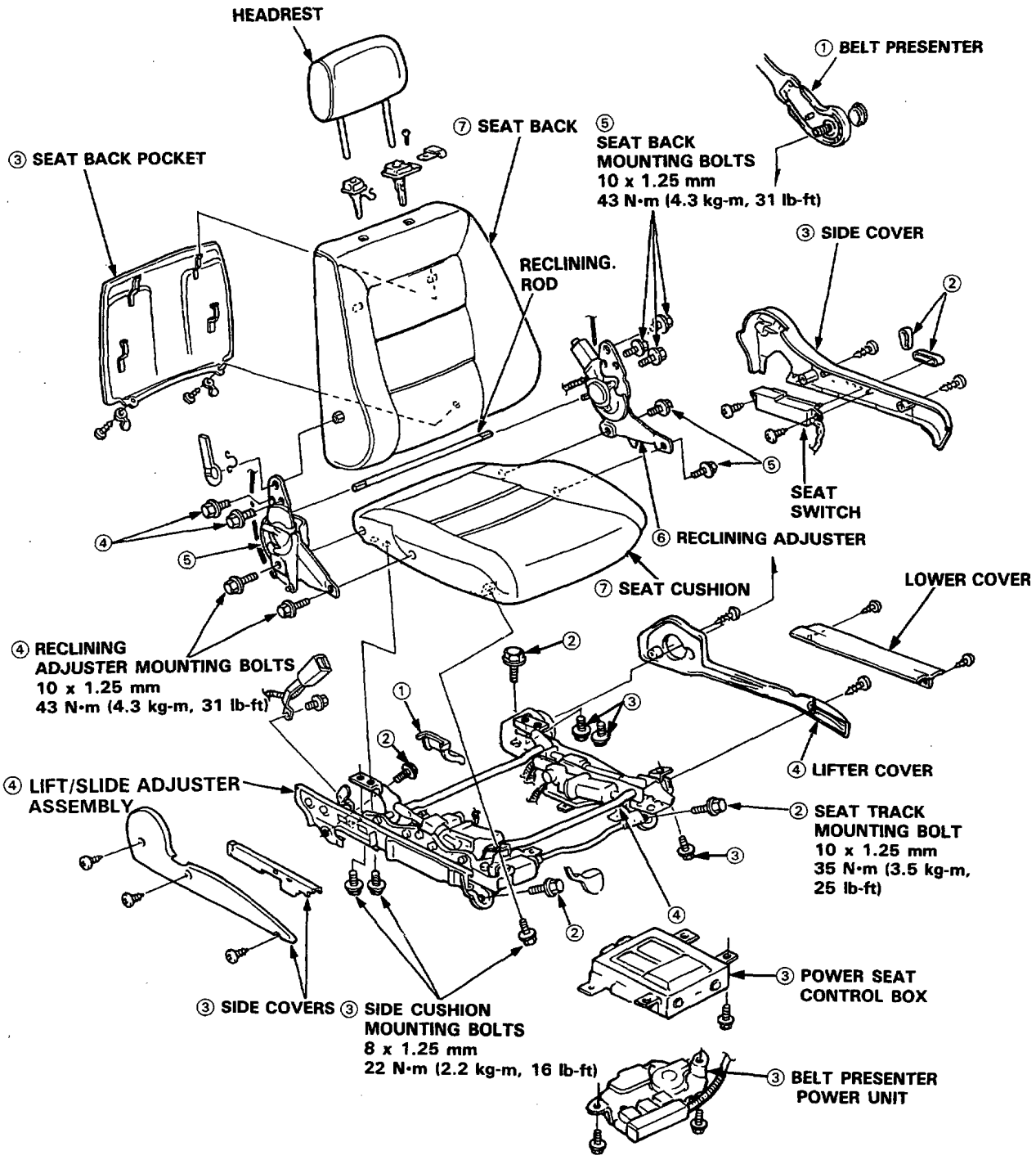

Seats

Rear Replacement

Disassemble in numbered sequence.

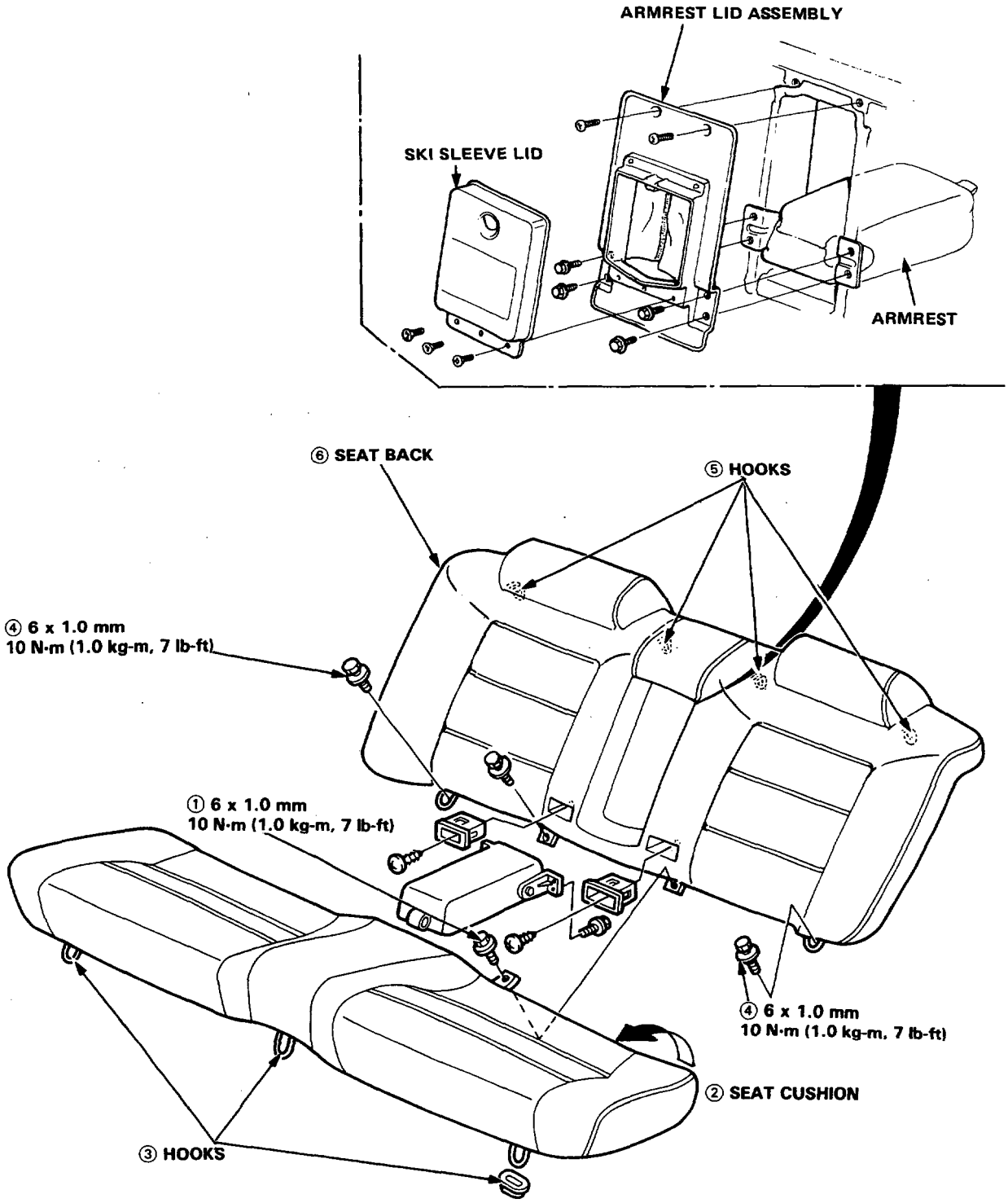

Console

Replacement

SRS wire harness is routed near the console.

⚠WARNING All SRS wire harness and connectors are colored Yellow. Do not use electrical test equipment on these circuit.

CAUTION: Be careful not to damage SRS wire harness when servicing the console and radio panel assembly.

Disassemble in numbered sequence.

NOTE:
- Lift up the parking brake lever.
- After removing the front console, disconnect the wire harness inside the console.
- Remove the front and rear consoles as an assembly.

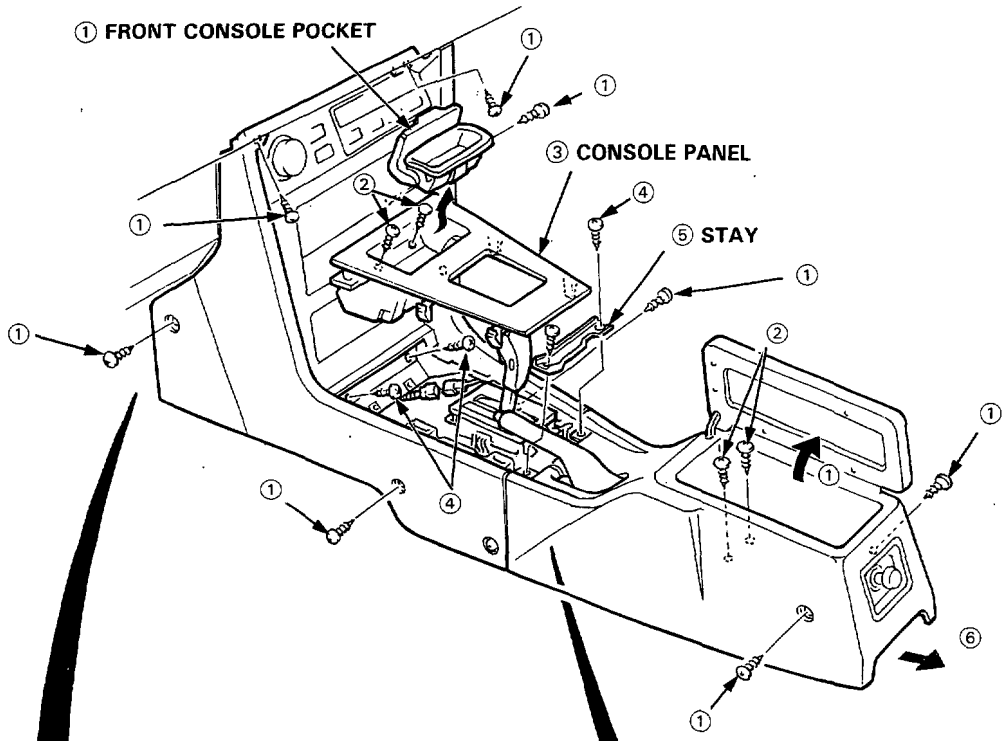

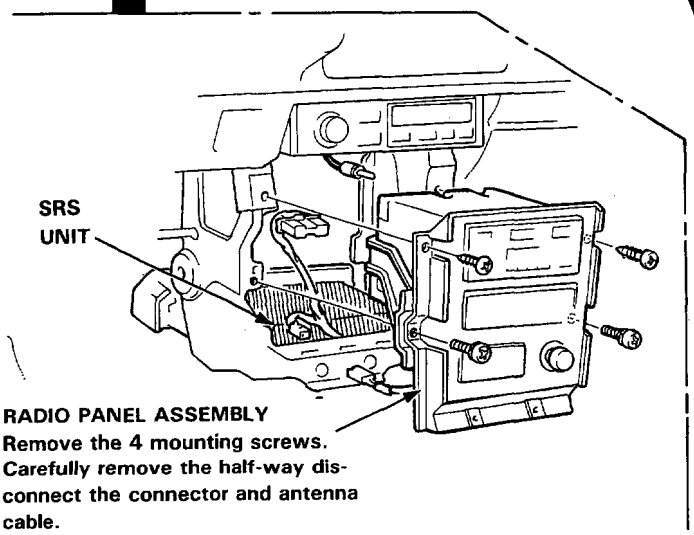

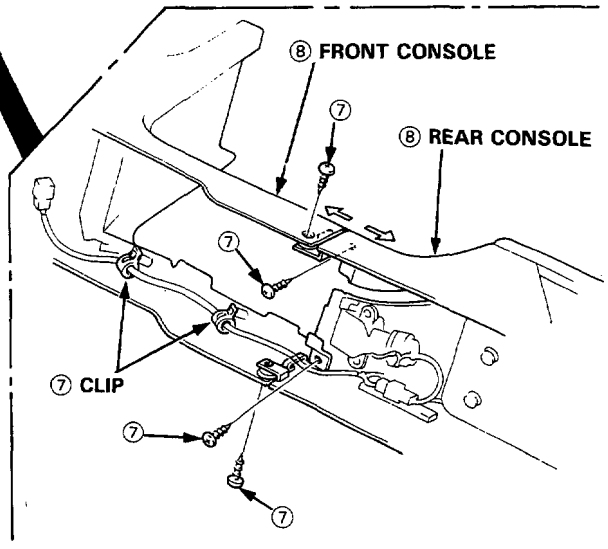

Carpet

Replacement

SRS wire harness is routed near the carpet.

WARNING **All SRS wire harness and connectors are colored Yellow. Do not use electrical test equipment on these circuit.**

CAUTION: Be careful not to damage SRS wire harness when servicing the carpet.

1. Remove:
   - Front seats.
   - Rear seat cushion.
   - Center console.
   - Right and left kick panels.
   - Door sill moldings.
   - Fuel lid opener.
   - Front seat belt lower anchor bolts.
   - Right and left quarter trim panels.
   - A/T control unit.
   - Footrest
2. Pry out the clips at the rear edge and under the dashboard, peel off the tapes, pry off the retainers on each side and remove the carpet.

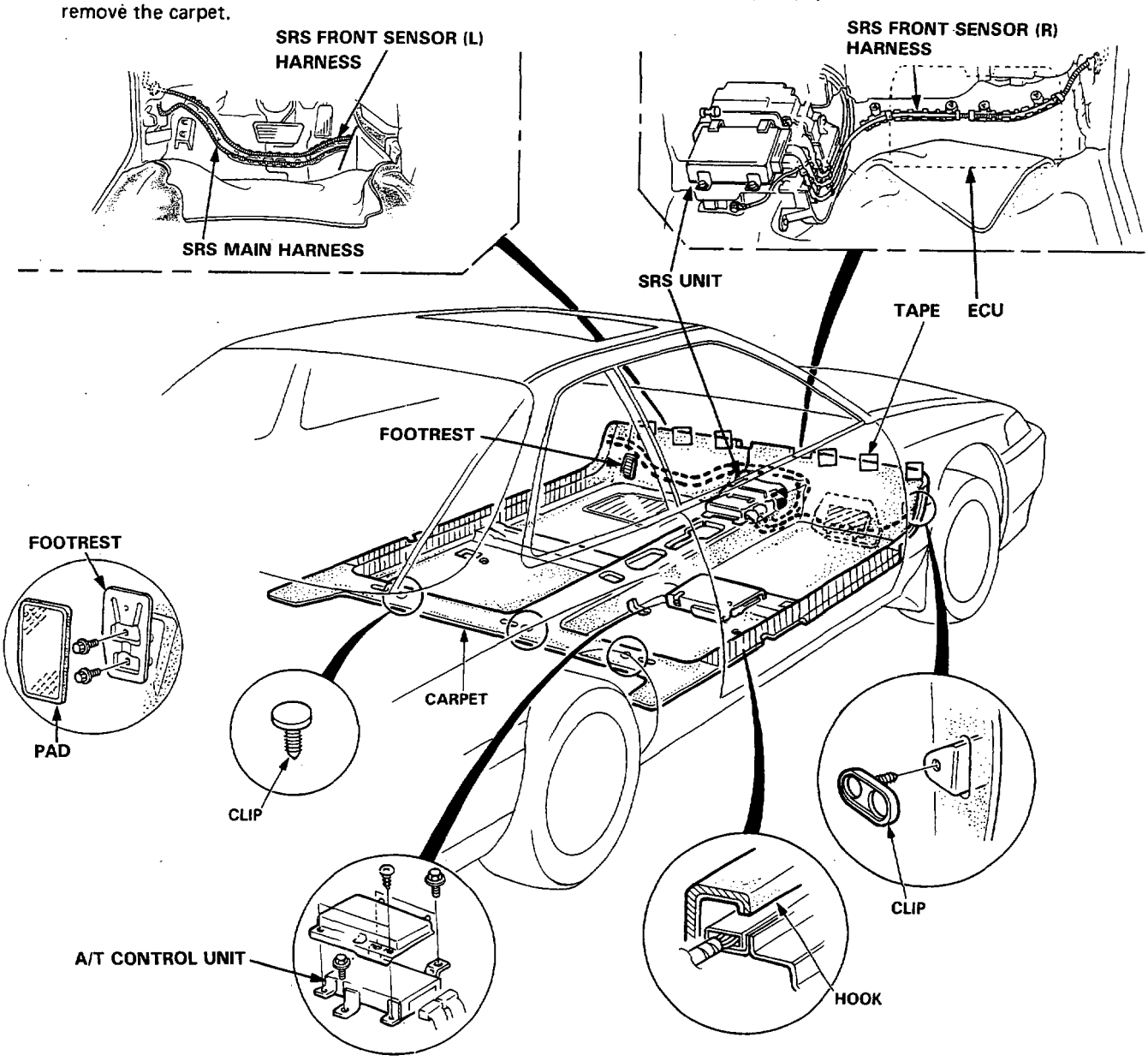

Dashboard

Components Removal/Installation

SRS wire harness is routed near the dashboard.

⚠WARNING **All SRS wire harness and connectors are colored yellow. Do not use electrical test equipment on these circuit.**

CAUTION: Be careful not to damage SRS wire harness when servicing the dashboard.

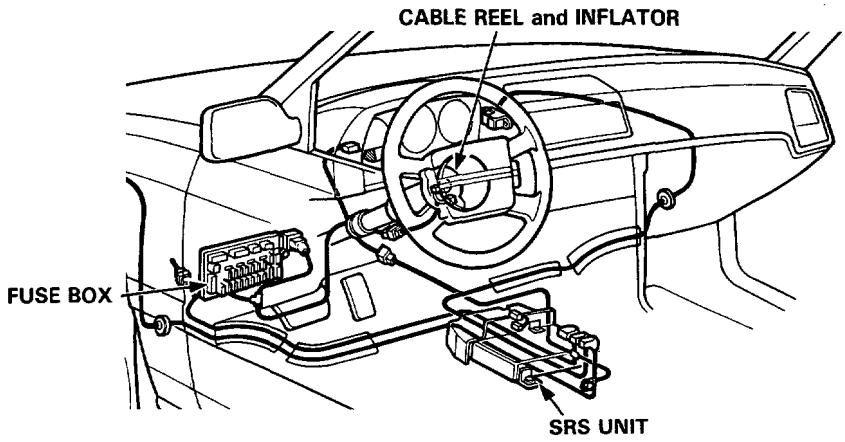

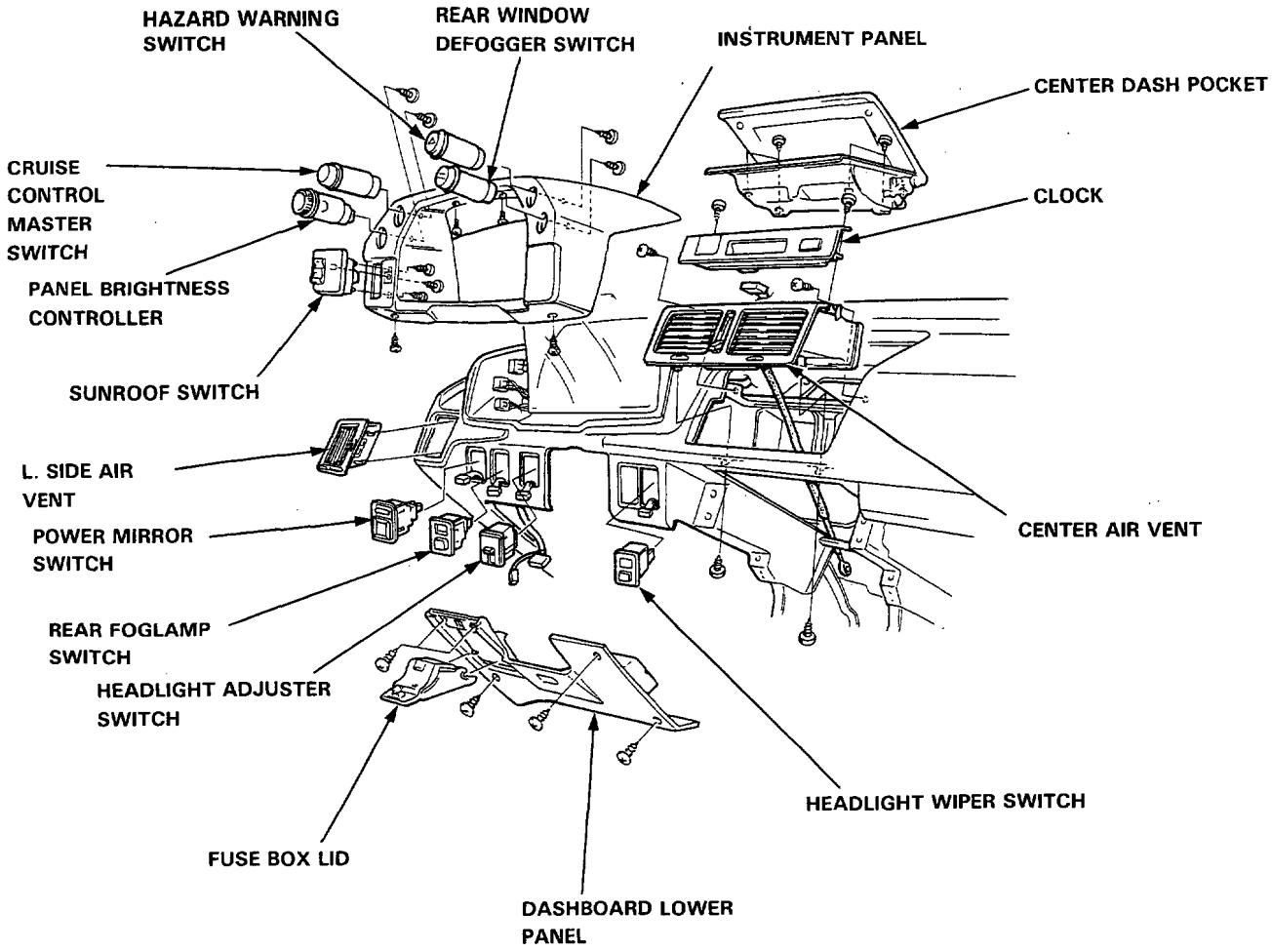

Dashboard

Replacement

SRS wire harness is routed near the dashboard.

⚠WARNING All SRS wire harness and connectors are colored Yellow. Do not use electrical test equipment on these circuit.

CAUTION: Be careful not to damage SRS wire harness when servicing the dashboard.

1. To remove the dashboard, first remove the:
   - Console and radio panel assembly (page 14-5).
   - Dashboard lower panel (page 14-7).
   - Airduct.
   - Steering column (See section 16).

   CAUTION: Remove the ignition key from the lock cylinder.

   - Center dash pocket (page 14-7)
2. Disconnect the dash wire harnesses from the connector holder and fuse box

   NOTE: Remove the dash harness ground bolt from the steering column bracket.

3. Disconnect the heater control cables.
4. Remove the dashboard mounting bolts.
5. Pull the dashboard straight back and disconnect the speedometer cable.

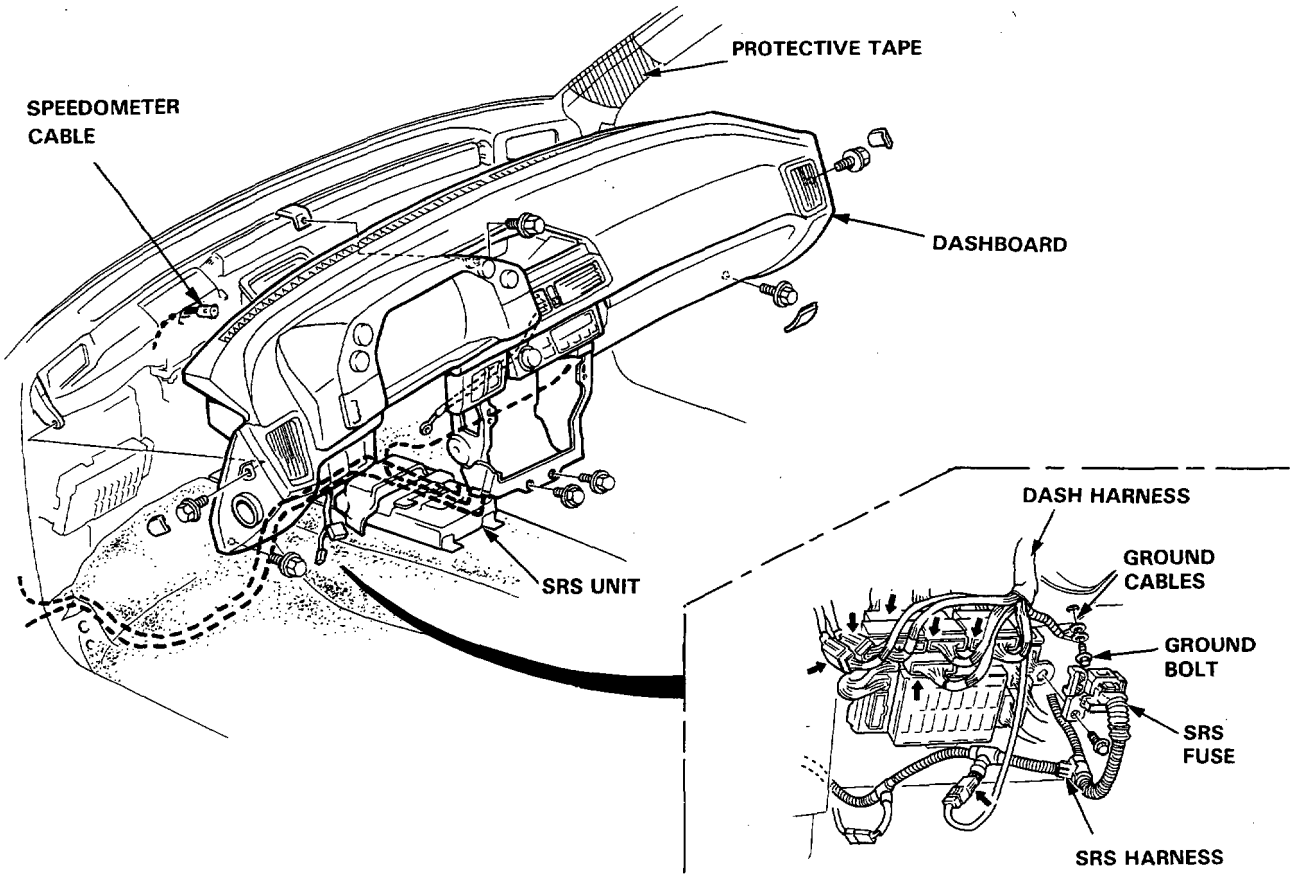

↑: Disconnect the connectors.

Reassembly NOTE:

- Make sure the dashboard fits onto the body correctly.
- Before tightening the dashboard bolts, make sure the instrument wires are not pinched, and that the dashboard is not interfering with the heater control cable.
- For ease of installation, remove gauge assembly from dash.

Front Bumper

Replacement

SRS wire harness is routed near the front bumper.

WARNING **All SRS wire harness and connectors are colored Yellow. Do not use electrical test equipment on these circuit.**

CAUTION: Be careful not to damage SRS wire harness when servicing the front bumper.

1. Remove the front side turn signal lights, then disconnect the wire harness.
2. Remove the 7 lower bumper mounting bolts and the 4 bumper mounting bolts.
3. Remove the bumper by sliding it forward.
4. Remove the bumper, then disconnect the ambient sensor harness.

If necessary:

5. Remove the bolts and nuts, then remove the front spoiler.
6. Remove the bumper brackets by removing the bracket mounting bolts.

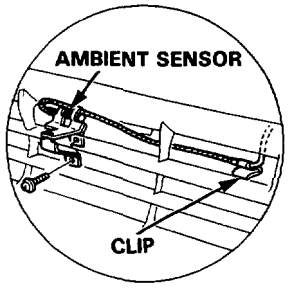

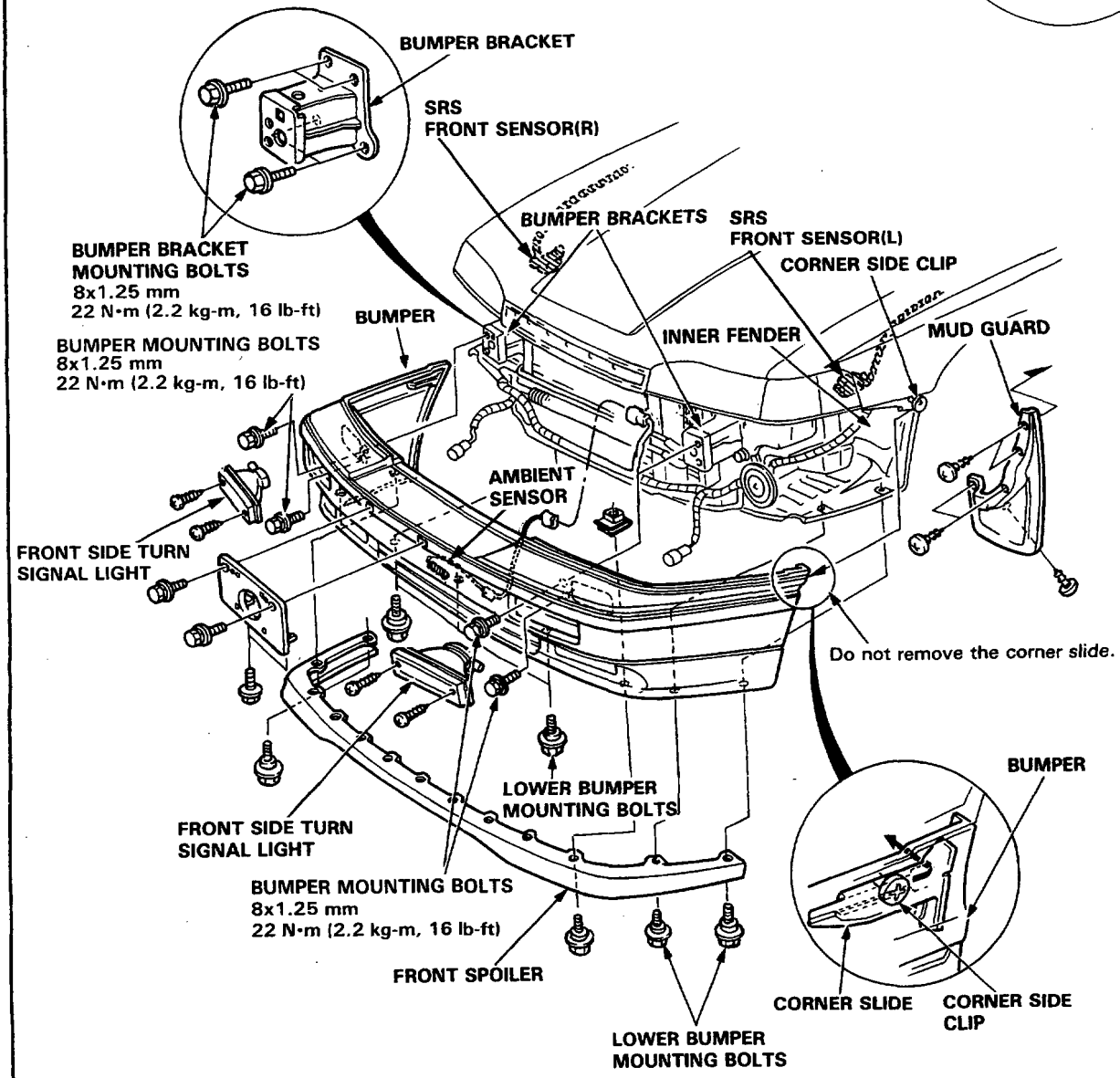

Hood Opener and Latch

Replacement

SRS wire harness is routed near the hood opener cables.

WARNING **All SRS wire harness and connectors are colored Yellow. Do not use electrical test equipment on these circuit.**

CAUTION: Be careful not to damage SRS wire harness when servicing the hood opener cables.

1. Remove the kick panel.
2. Remove the bolts, then remove the hood opener and disconnect the opener cables.
3. Remove the 2 bolts from each hood lock, then remove the hood locks and disconnect the opener cables.
4. Remove the inner fender, then pull out the opener cables.

   NOTE: Before pulling out the opener cables, tie strings to both ends of it so you can pull it back in when it is reinstalled.

5. Remove the front grille and 2 condenser mounting bolts.
6. Remove the condenser, then remove the hood latch mounting bolts and nut, and the hood latch.

   NOTE: Do not drop bolts and nut.

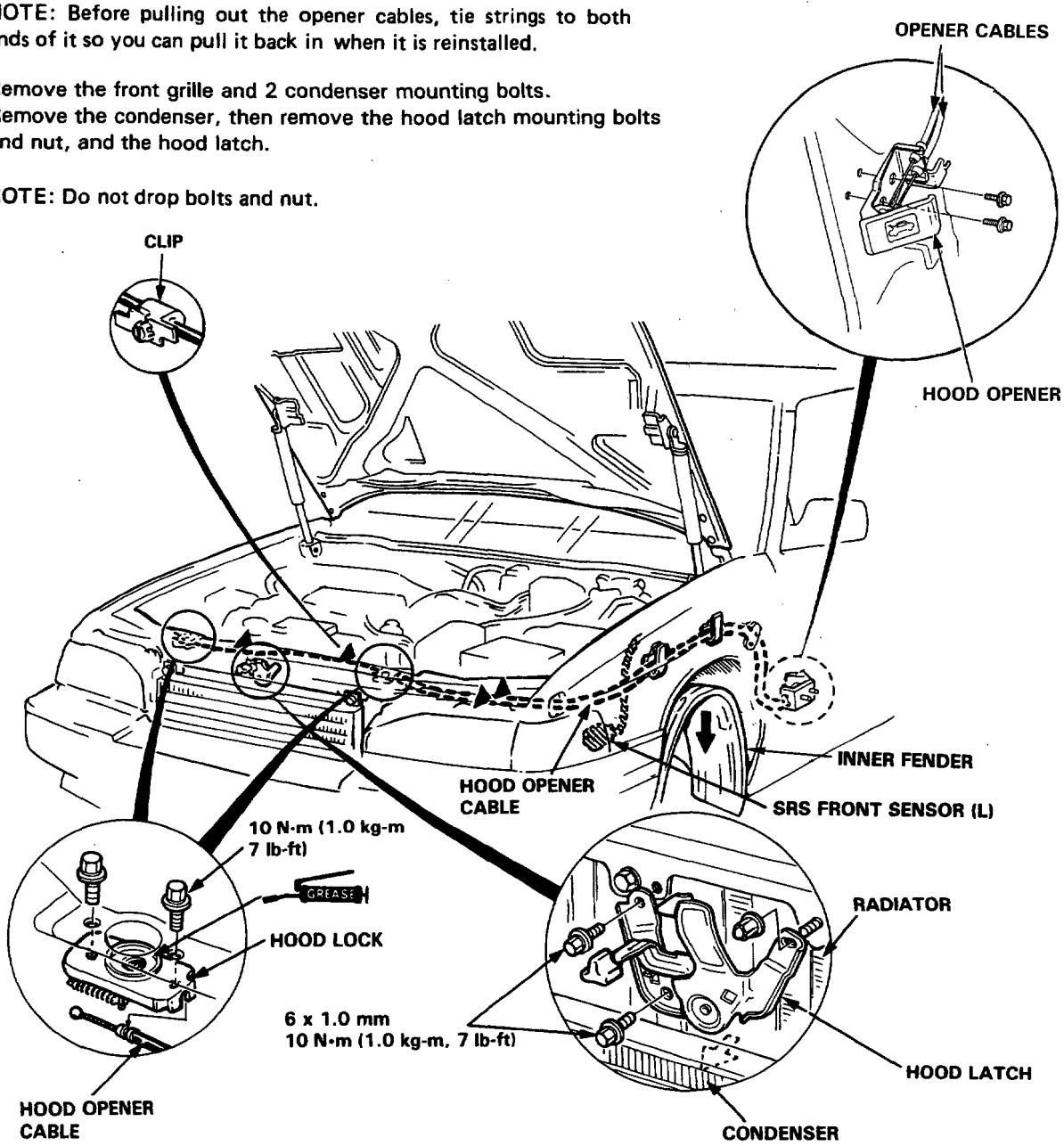

Blower

Replacement

SRS wire harness is routed near the blower.

⚠WARNING All SRS wire harness and connectors are colored Yellow. Do not use electrical test equipment on these circuit.

CAUTION: Be careful not to damage SRS wire harness when servicing the blower.

1. Disconnect the battery negative terminal.
2. Remove the screws (3), then remove the glove box lower cover.
3. Remove the screws (2), then remove the glove box.
4. Remove the screws (4) and tapping screws (5), then remove the glove box frame, clips (2), and side heater duct.
5. Discharge the refrigerant very slowly from the air conditioner system.
6. Remove the evaporator.
7. Disconnect the wire connectors from the blower.
8. Remove the mounting bolts (3) from the blower.
9. Remove the blower.
10. Install the blower in the reverse order of removal making sure there is no air leakage.

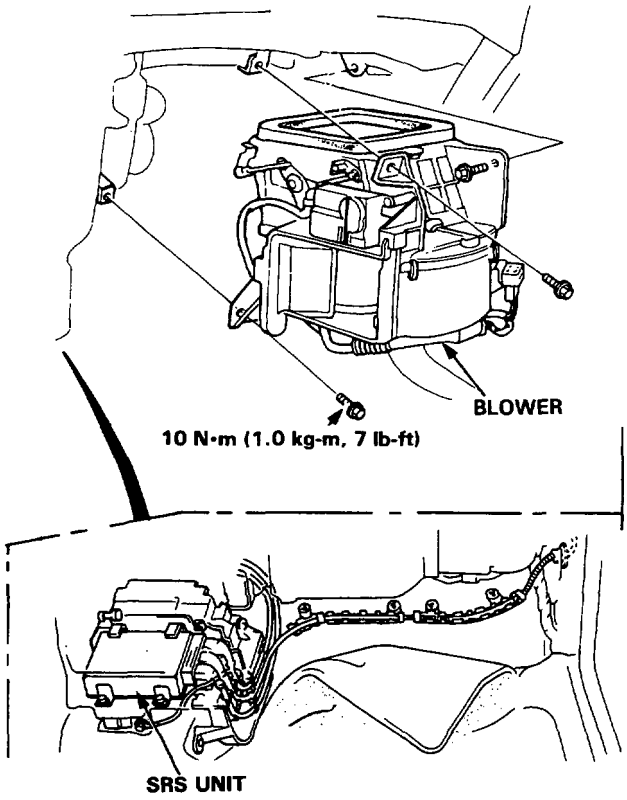

Disassembly

NOTE:

- Before reassembly, make sure that the air door and linkage moves smoothly without binding.
- When re-attaching the actuator, make sure its positioning will not allow the air door to be pulled too far. Attach the actuator and all linkage, then apply battery voltage and watch the door movement. If necessary, loosen the holding screw and move the actuator up or down.

To adjust the control rod:

Connect the REC control motor connector to the main wire harness, push the FRESH/REC switch to "FRESH" and open the air doors. Then connect the control rod to the arm while holding the air doors open.

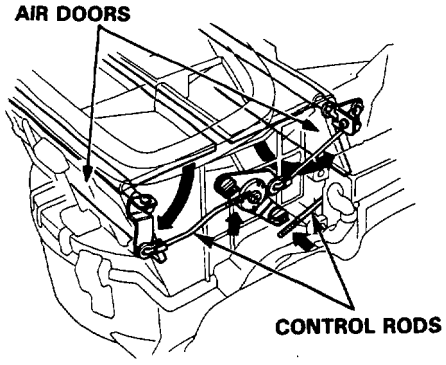

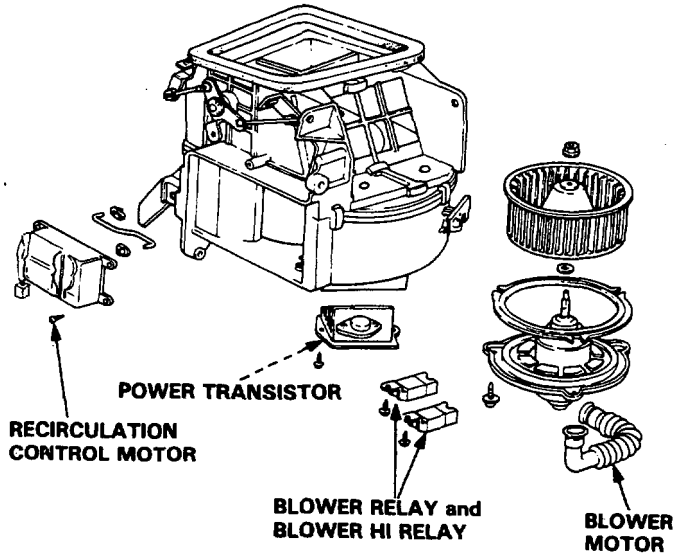

Heater Assembly

Replacement

SRS wire harness is routed near the heater.

⚠WARNING All SRS wire harness and connectors are colored yellow. Do not use electrical test equipment on these circuit.

CAUTION: Be careful not to damage SRS wire harness when servicing the heater.

1. Drain coolant in the radiator.

2. Disconnect the heater hoses at the heater.

   NOTE: Coolant will run out when the hoses are disconnected; drain it into a clean drip pan.

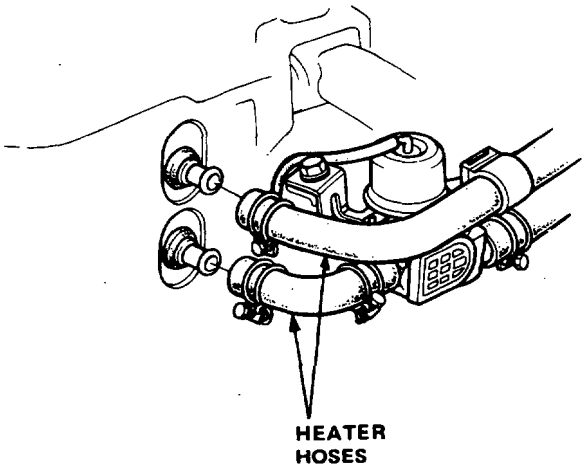

3. Remove the dashboard.

4. Disconnect the wire harness and vacuum hoses.

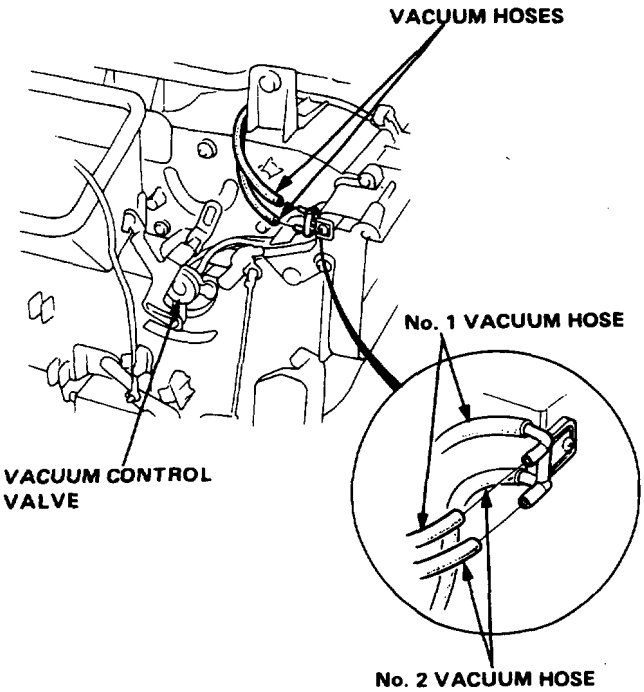

5. Remove the heater mounting bolts (2) and mounting nuts (2), then pull the heater away from the body.

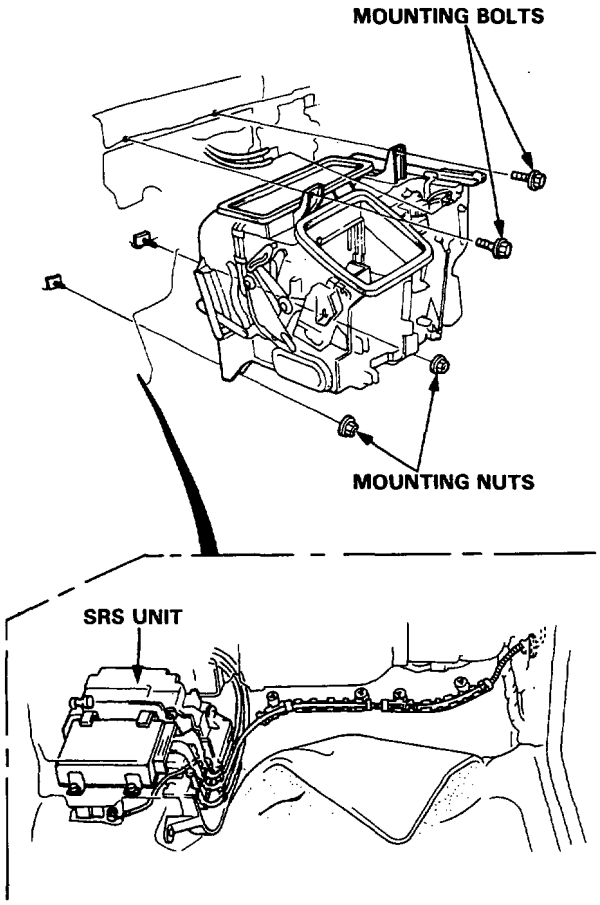

Install in the reverse order of removal, and:

- Apply a sealant to the grommets.
- Do not interchange the inlet and outlet hoses. Make sure that the hose clamps are secure.
- Loosen the bleed bolt on the engine and refill the radiator and reservoir tank with the proper coolant mixture.
  Tighten the bleed bolt when all the trapped air has escaped and coolant begins to flow from it.
- Connect all cables and make sure they are properly adjusted.
- Connect the vacuum hose properly and check the hose for bends, breakage, or pinching.

Function Control Panel

Removal

SRS wire harness is routed near the console.

⚠WARNING All SRS wire harness and connectors are colored yellow. Do not use electrical test equipment on these circuit.

CAUTION: Be careful not to damage SRS wire harness when servicing the console.

1. Remove the screws, then remove the front console.
2. Remove the radio/cassette player.

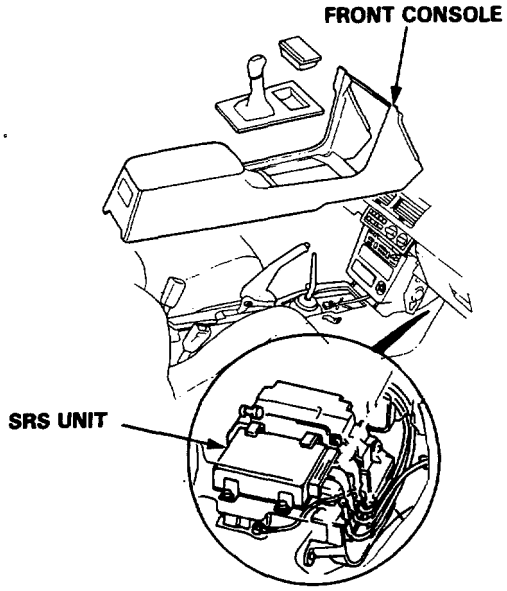

3. Remove the heat control cable from the heater. heater.

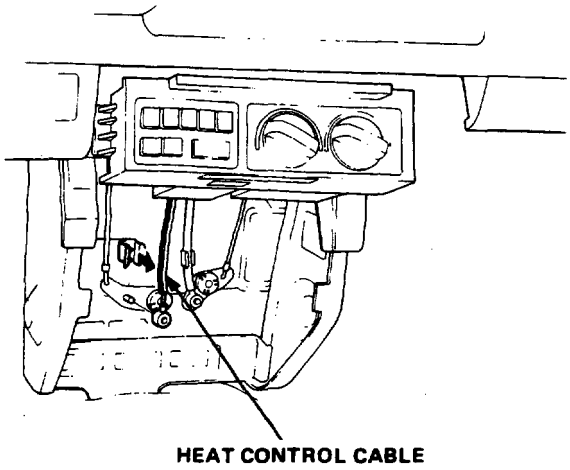

4. Remove the screws (4).
5. Disconnect the connector and remove the function control panel.

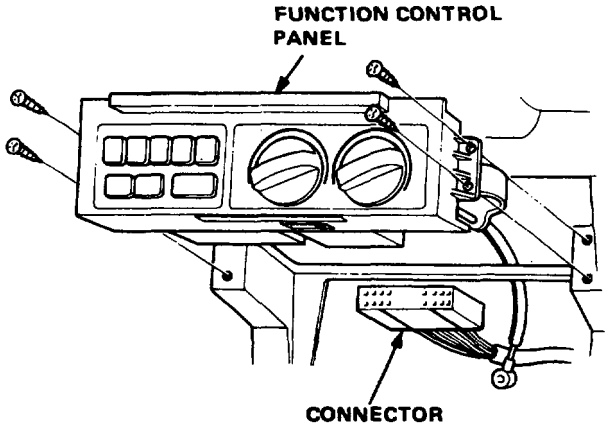

Install in the reverse order of removal and make sure the heat control cable is properly adjusted.

Evaporator

Replacement

SRS wire harness is routed near the evaporator.

⚠WARNING All SRS wire harness and connectors are colored yellow. Do not use electrical test equipment on these circuit.

CAUTION: Be careful not to damage SRS wire harness when servicing the evaporator.

1. Disconnect the battery negative terminal.
2. Discharge the refrigerant.
3. Disconnect the receiver line and suction hose from the evaporator.

   CAUTION: Cap the open fittings immediately to keep moisture out of the system.

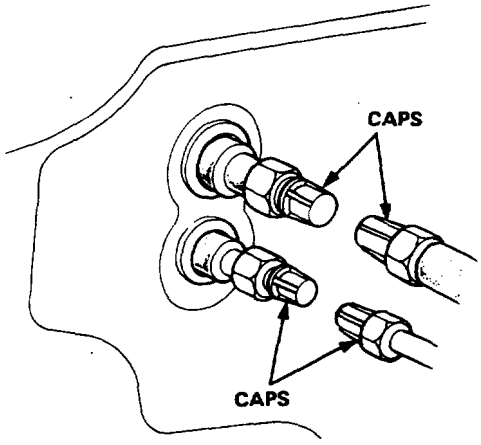

4. Remove the 5 screws, then remove the glove box lower cover and glove box.
5. Remove the 4 screws, then remove the glove box frame and side duct.
6. Disconnect the wire harness from the thermostat switch connector.

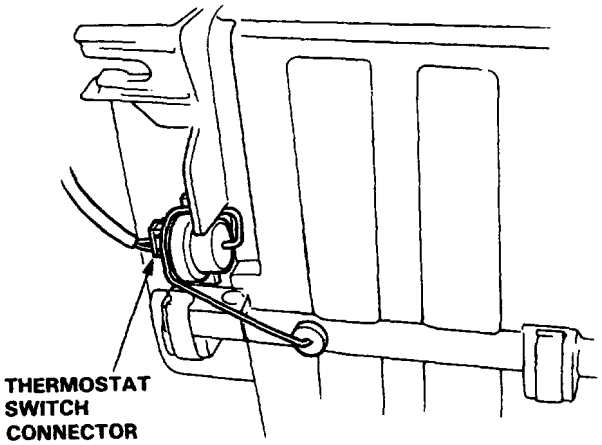

7. Remove the 4 tapping screws and 3 mounting bolts.

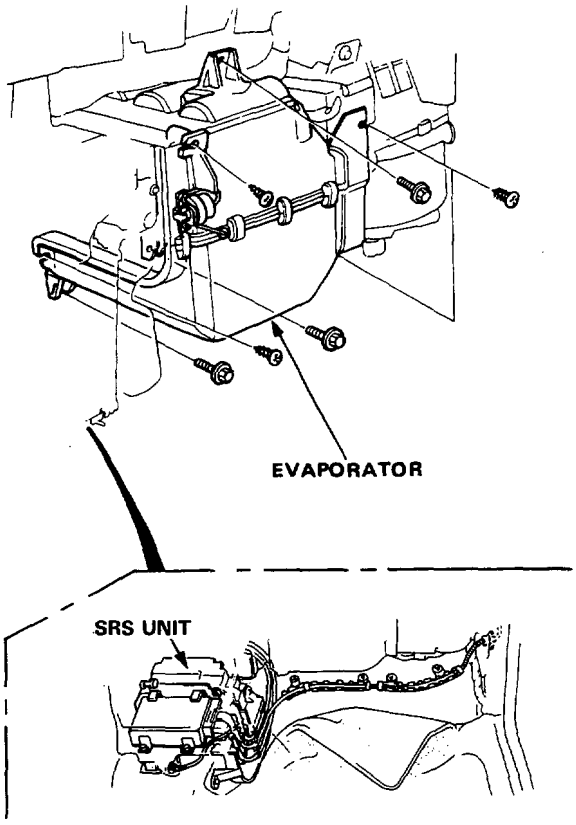

8. Pull the evaporator away from the body.
9. Install in the reverse order of removal, and:
   - Apply a sealant to the grommets.
   - Make sure that there is no air leakage.
10. Charge the system and test performance.

Compressor

Troubleshooting

TEST RESULTS	RELATED SYMPTOMS	PROBABLE CAUSE	REMEDY
Discharge (high) pressure abnormally high	After stopping compressor, pressure drops to about 196 kPa (28 psi) quickly, and then falls gradually	Air in system	Evacuate system; then recharge Evacuation: page 15-12 Recharging: page 15-14
	No bubbles in sight glass when condenser is cooled by water	Excessive refrigerant in system	Discharge refrigerant as required
	Reduced or no air flow through condenser.	· Clogged condenser or radiator fins · Condenser or radiator fan not working properly.	· Clean · Check voltage and fan rpm
	Line to condenser is excessively hot	Restricted flow of refrigerant in system	Expansion valve
Discharge pressure abnormally low	Excessive bubbles in sight glass; condenser is not hot	Insufficient refrigerant	· Charge system · Check for leak
	High and low pressures are balanced soon after stopping compressor	· Faulty compressor discharge or inlet valve · Faulty compressor seal	Replace compressor Repair
	Outlet of expansion valve is not frosted, low pressure gauge indicates vacuum	· Faulty expansion valve	Repair or Replace
Suction (low) pressure abnormally low	Excessive bubbles in sight glass; condenser is not hot	Insufficient refrigerant	Check for leaks. Charge as required.
	Expansion valve is not frosted and low pressure line is not cold. Low pressure gauge indicates vacuum.	· Frozen expansion valve · Faulty expansion valve	Replace expansion valve
	Discharge temperature is low and the air flow from vents is restricted	Frozen evaporator	Run the fan with compressor off then check the thermostat and capillary tube.
	Expansion valve frosted	Clogged expansion valve	Clean or Replace
	Receiver dryer is cool (should be warm during operation)	Clogged receiver drier	Replace
Suction pressure abnormally high	Low pressure hose and check joint are cooler than around evaporator	· Expansion valve open too long · Loose expansion valve	Repair or Replace
	Suction pressure is lowered when condenser is cooled by water	Excessive refrigerant in system	Discharge refrigerant as necessary
	High and low pressures are balanced too equalized as soon as the compressor is stopped	· Faulty gasket · Faulty high pressure valve · Foreign particle stuck in high pressure valve	Replace compressor
Suction and discharge pressures abnormally high	Reduced air flow through condenser	· Clogged condenser or radiator fins · Condenser or radiator fan not working properly	· Clean condenser and radiator · Check voltage and fan rpm
	No bubbles in sight glass when condeser is cooled by water	Excessive refrigerant in system	Discharge refrigerant as necessary.
Suction and discharge pressures abnormally low	Low pressure hose and metal end areas are cooler than evaporator	Clogged or kinked low pressure hose parts	Repair or Replace
	Temperature around expansion valve is too low compared with that around receiver-dryer.	Clogged high pressure line	Repair or Replace
Refrigerant leaks	Compressor clutch is dirty	Compressor shaft seal leaking	Replace compressor shaft seal
	Compressor bolt(s) are dirty	Leaking around bolt(s)	Replace compressor
	Compressor gasket is wet with oil	Gasket leaking	Replace compressor

Clutch Inspection

- Check pulley bearing play and drag by rotating the pulley by hand. Replace the pulley with a new one if it is noisy or has excessive play and drag.

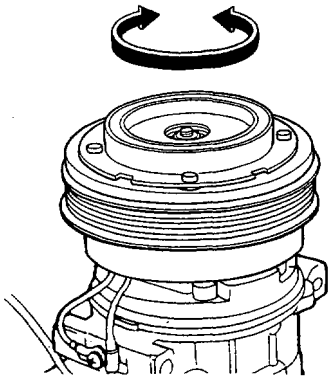

- Check resistance of the stator coil:

Stator Coil resistance: 2.7–3.1 ohm at 20°C (68°F)

If resistance is not within specifications, replace the coil.

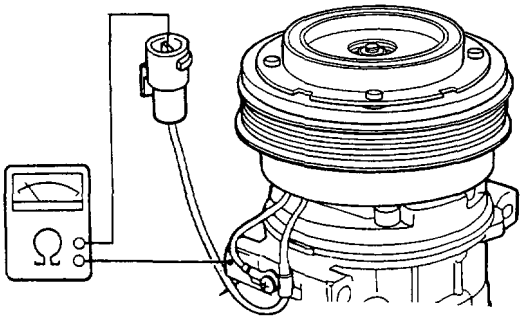

- Tighten the hub nut to 15–17.5 N·m (1.5–1.75 kg-m, 11–12.7 lb-ft) and measure the clearance between the pulley and pressure plate all the way around. If the clearance is not within specified limits, the pressure plate must be removed and shims added or removed as required.

CLEARANCE: 0.8 ± 0.2 mm (0.023–0.040 in)

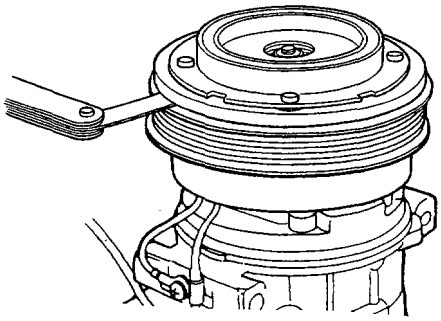

NOTE: The shims are available in six sizes: 0.1 mm, 1.0 mm, 1.25 mm, 1.5 mm, 1.75 mm and 2.0 mm of thickness. 0.1 mm shim is used for minor adjustment.

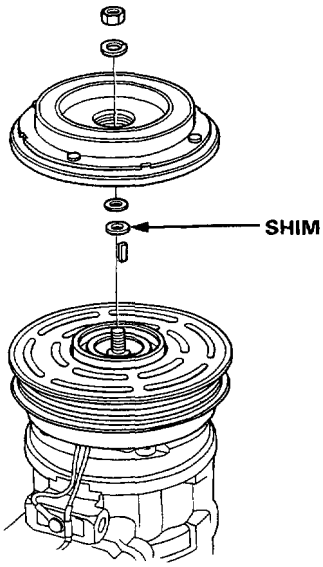

Compressor

Clutch Overhaul

1. Remove the nut and spring washer while holding the pressure plate.

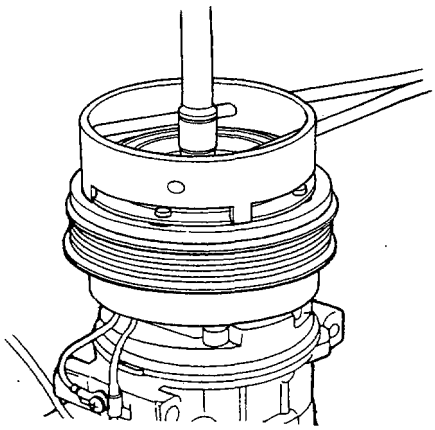

2. Thread the special tool into the pressure plate and remove the pressure plate by screwing in the center bolt.

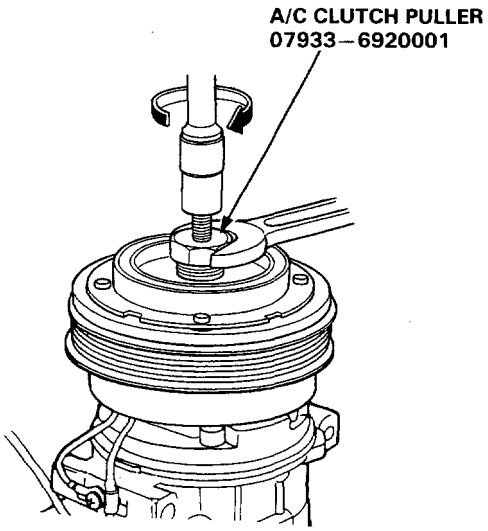

3. Use circlip pliers to take the circlip off and remove the pulley from the shaft with a 2 or 3 jaw puller.

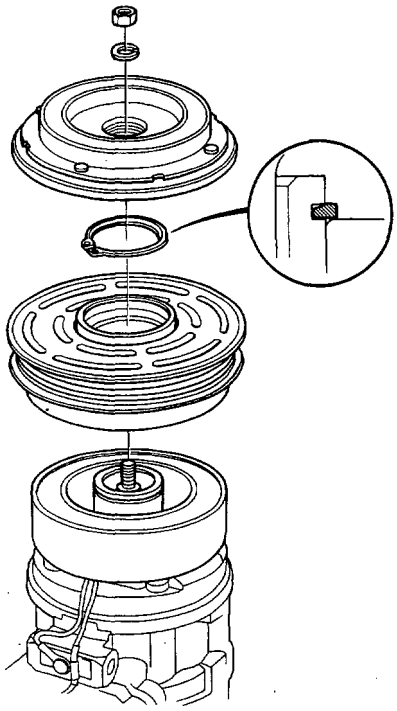

4. Remove the stator coil by removing the large circlip.

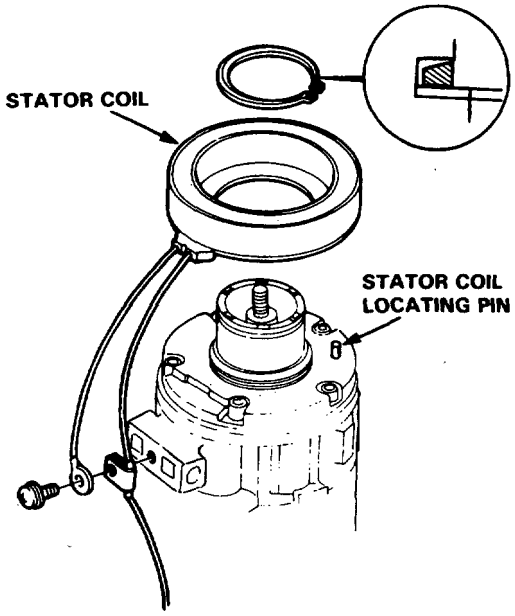

Shaft Seal Replacement

Removal

NOTE: Make sure the suction and discharge joints are plugged with caps.

1. Remove the pressure plate.

   NOTE: Removal of the clutch pulley and coil is not necessary.

2. Remove the dust seal set.
   Remove the 32 mm snap ring.

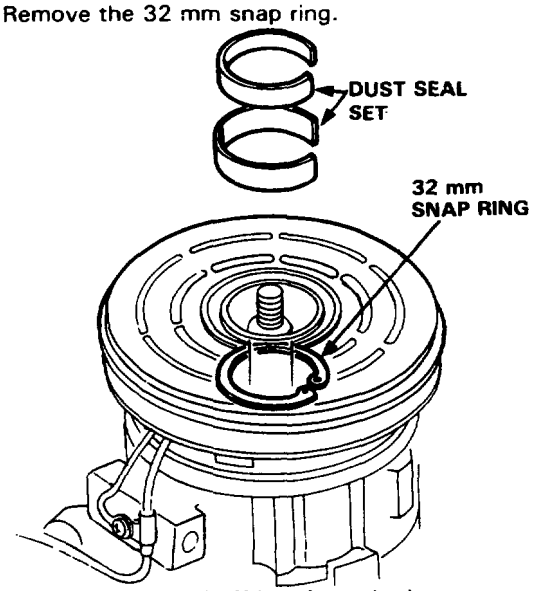

3. Remove the woodruff key from the key way.

   NOTE: If the woodruff key is to be reused, be careful not to damage it.

4. Remove the shim(s).

   NOTE: After removing, store shim(s) safely in a parts rack.

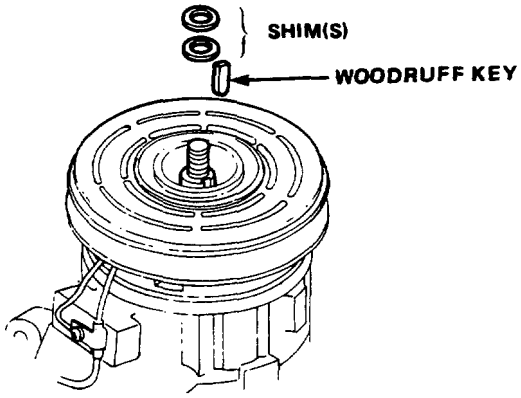

5. Seat the seal plate into the groove of the special tool.

6. Pull out the seal seat.

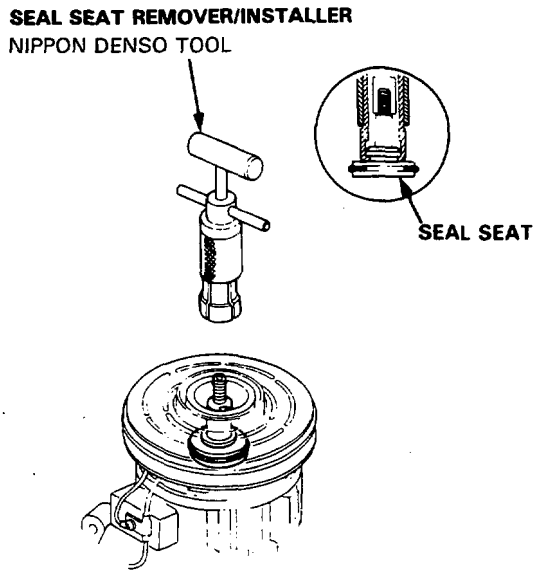

7. Insert the special tool into the compressor aligning the cutout of the remover with the metal pawl of the seal case.

8. Rotate the special tool clockwise or counter-clockwise to make sure that the cutout is engage with the metal pawl.

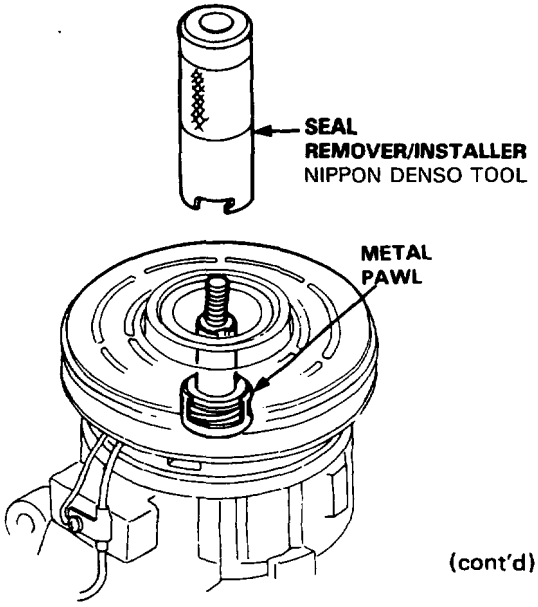

(cont'd)

Shaft Seal Replacement (cont'd)

9. Press the remover until it bottoms, then turn it counterclockwise as far as it will go.

10. Withdraw the remover.

11. Lay down the compressor and clean the shaft seal contacting face of the compressor with cleaning solvent.

CAUTION:
- **Keep the cleaning solvent and dirt out of the compressor.**
- **Use only a lint free cloth for cleaning.**
- **Do not spill the refrigerant oil from the compressor. Refill the same amount of the oil if the oil is spilled out.**

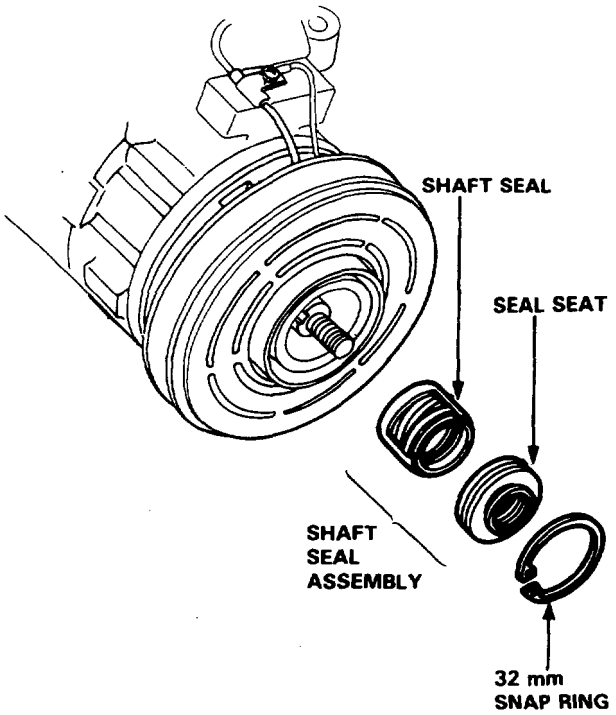

Installation

NOTE: Install the shaft seal assembly after the cleaning solvent is dried out.

1. Clean the new shaft seal thoroughly with cleaning solvent.

2. Lubricate the shaft seal with refrigerant oil (SUNISO 5GS or equivalent) and install it on the special tool.

NOTE:
- Use only clean refrigerant oil.
- Do not touch the sealing surfaces of the shaft seal after lubricating.

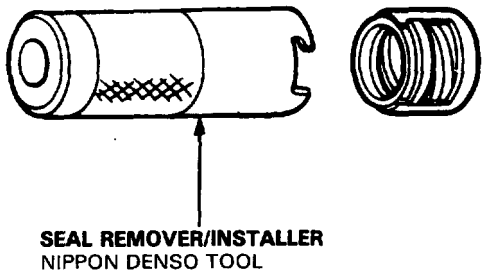

3. Liberally lubricate the compressor shaft with refrigerant oil.

4. Install the shaft seal onto the compressor shaft aligning the seal case flats with the shaft flats.

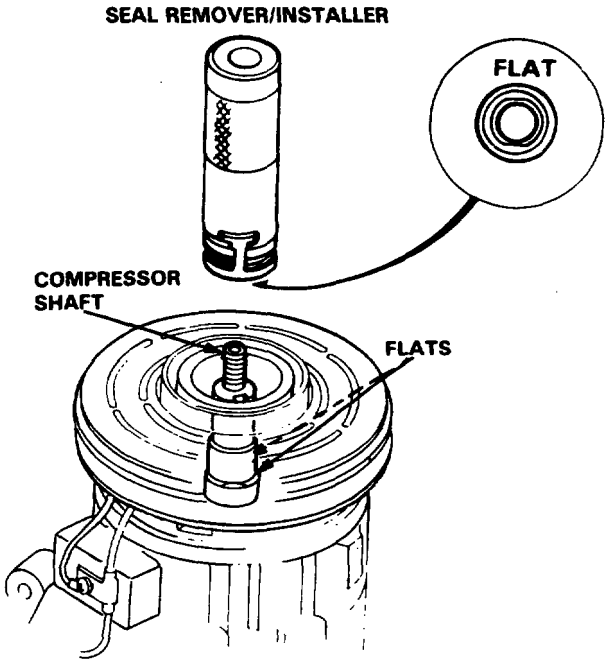

5. Press the remover until it bottoms, then turn it counterclockwise as far as it will go.

   NOTE: The remover will go lower when the flats are aligned.

6. Turn the remover clockwise, then pull it out.

7. Slide the shaft seal onto the shaft until it seats on the shaft taper as shown.

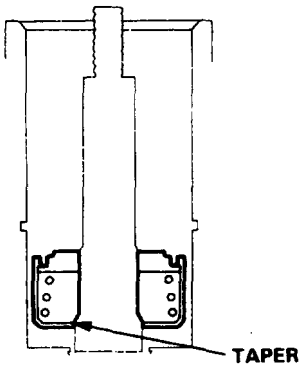

8. Check the inside diameter of the compressor for score marks or foreign particles.

9. Clean the seal seat with cleaning solvent, then lubricate the seal seat with refrigerant oil (SUNISO 5GS or equivalent).

   NOTE:
   - Use only clean refrigerant oil.
   - Do not touch the sealing surface of the seal plate after lubricated.

10. First slide the seal plate into the compressor by hand as far as possible.

11. Press the seal plate with the grip side of the remover.

    CAUTION: Be careful not to damage the compressor.

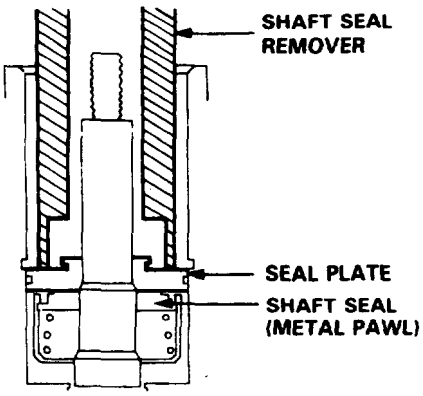

12. Install the 32 mm snap ring with its chamfered edge inside.

13. Press the snap ring with the grip side of the remover.

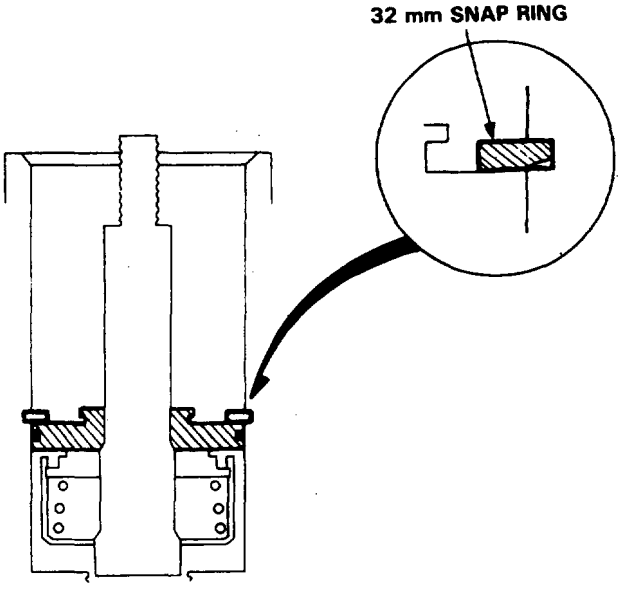

14. Install the shim(s) and woodruff key.

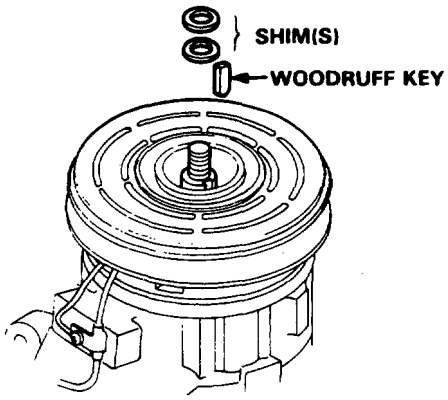

15. Evacuate and charge the compressor and then perform a leak test.

16. Install the pressure plate. Measure the clearance between the pulley and pressure plate all the way around. If the clearance is not within the specified limits, [0.8 ± 0.2 mm (0.023–0.040 in)] shims must be added or removed as required.

System Charging

System Evacuation

The following are the procedures to be adhered to when servicing air conditioners to reduce the amount of Fron R-12 into the atmoshpere.

1. When an A/C System has been opened to the atmosphere, such as during installation or repair, it must be evacuated using a vacuum pump. (If the system has been open for several days, the receiver/dryer should be replaced).
2. Connect a gauge, pump and refrigerant containers (cans of R-12) as shown.
   NOTE: Do not open the cans.
3. Start the pump, then open the both pressure valves, both pressure stop valves and evacuation valve (2 valve gauge: evacuation stop valve). Run the pump about 15 minutes. Close the both pressure valves and evacuation valve (2 valve gauge: evacuation stop valve) and stop the pump. The low gauge should indicate above 700 mmHg (27 in-Hg) and remain steady with the valves closed.
   NOTE: If low pressure does not reach more than 700 mmHg (27 in-Hg) in 15 minutes, there is probably a leak in the system. Check for leaks, and repair (see Leak Test).
4. If there are no leaks open the valves and continue pumping for at least another 15 minutes, then close both valves, stop the pump.

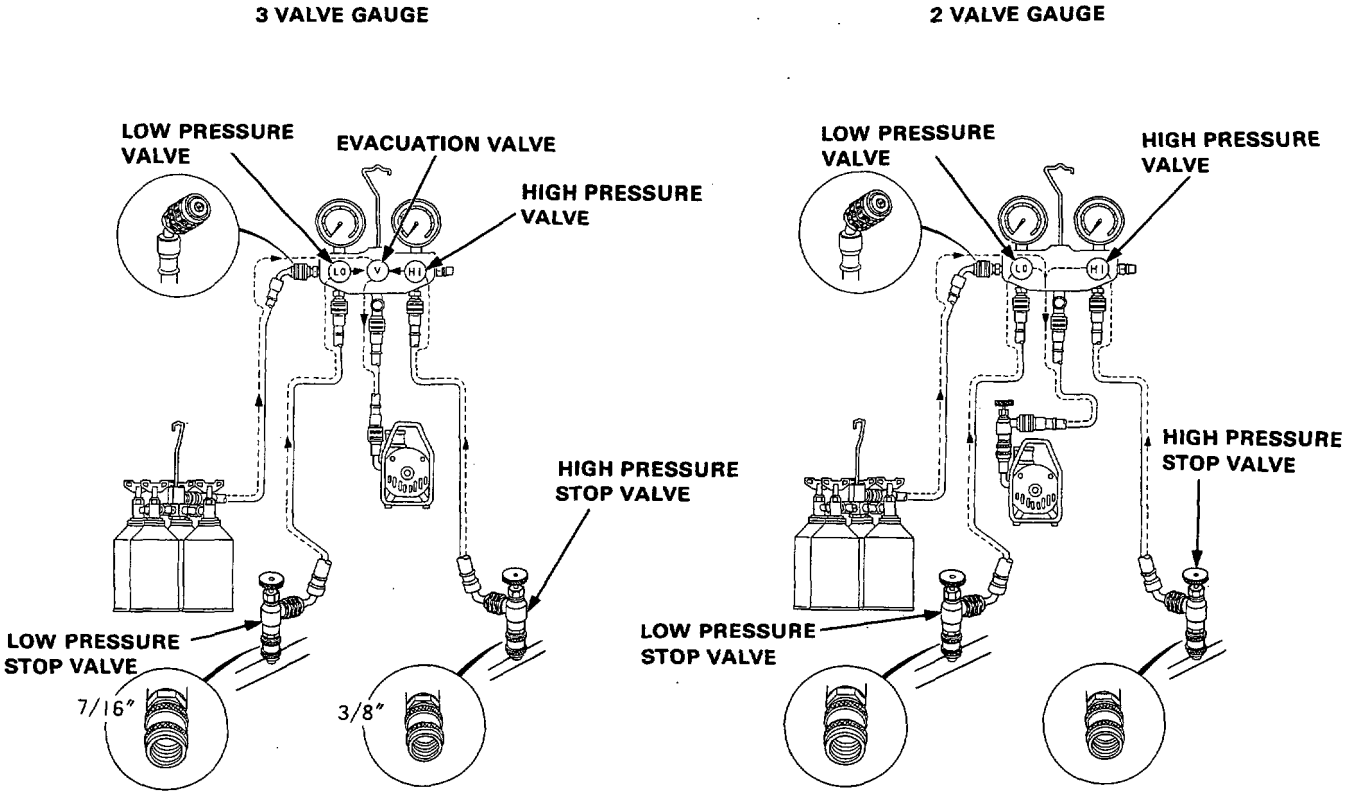

Leak Test

The following are the procedures to be adhered to when servicing air conditioners to reduce the amount of from R-12 into the atmoshpere.

⚠WARNING When handling refrigerant (R-12):

- **Always wear eye protection.**
- **Do not let refrigerant get on your skin or in your eyes. If it does:**
  - **Do not rub your eyes or skin.**
  - **Splash large quantities of cool water in your eyes or on your skin.**
  - **Rush to a physician or hospital for immediate ment. Do not attempt to treat it yourself.**
- **Keep refrigerant containers (cans of R-12) stored below 40°C (100°F).**
- **Keep away from open flame. Refrigerant, although non-flammable, will produce poisonous gas if burned.**
- **Work in well-ventilated area. Refrigerant evaporates quickly, and can force all the air out of a small, enclosed area.**

NOTE: Check fof leaks after evacuation.

1. Close the evacuation valve (2 valve gauge; evacuation stop valve).
2. Open the cans.
3. Open high pressure valve to charge the system to about 100 kpa (14 psi), then close the supply valve. NOTE: Particularly check for leaks around the compressor, condenser, and receiver-driver.
5. If you find any leaks, tighten the joint nuts and to the specified torque.
6. Recheck the system for leaks using a leak detector.
7. If you find leaks that require the system to be opened (to repair or replace hoses, fittings, etc.), release any charge in the system.
8. After checking and repairing leaks, the system must be evacuated (see System Evacuation on page 15–12).

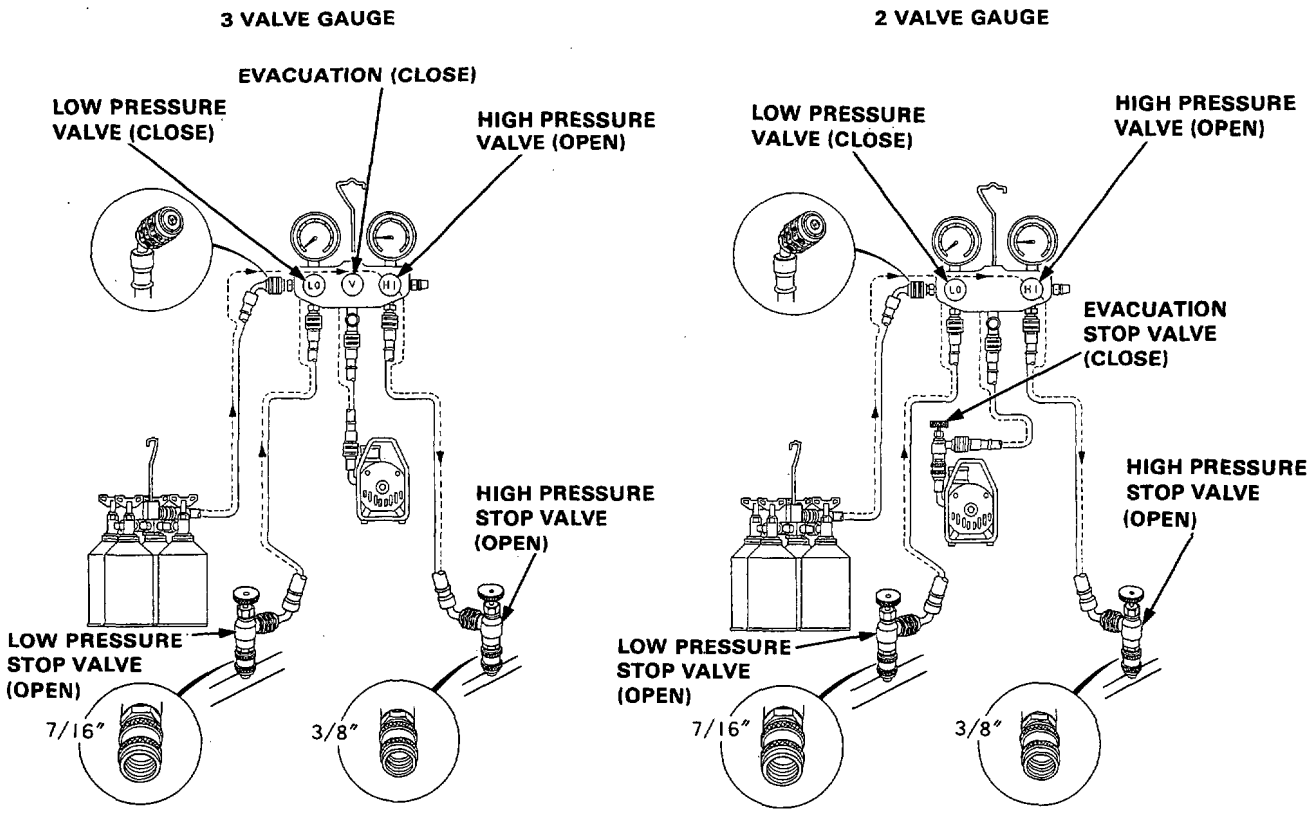

System Charging

Charging Procedures

The following are the procedures to be adhered to when servicing air conditioners to reduce the amount of from R-12 into the atmoshpere.

⚠WARNING **When handling refrigerant (R-12):**

- **Always wear eye protection.**
- **Donot let refrigerant get on your skin or in your eyes. If it does:**
  - **Do not rub your eyes or skin.**
  - **Splash large quantities of cool water in your eyes or on your skin.**
  - **Rush to a physician or hospital for immediate ment. Do not attempt to treat it yourself.**
- **Keep refrigerant containers (cans of R-12) stored below 40°C (100°F).**
- **Keep away from open flame. Refrigerant, although non-flammable, will produce poisonous gas if burned.**
- **Work in well-ventilated area. Refrigerant evaporates quickly, and can force all the air out of a small, enclosed area.**

CAUTION: Do not overcharge the system; the compressor will be dameged.

1. After leak test, check that the high pressure valve is closed and start the engine.
   NOTE: Run the engine balow 1500 rpm.
2. Open the front door.
   Turn the A/C switch on.
   Turn the air mix dial (lever) to COOL.
   Turn the function control switch (lever) on
   Turnthe heater fan switch on "E" (MAX).
3. Open the low pressure valve and charge with ant.

⚠WARNING

- **Do not open the high gauge valve.**
- **Do not turn the cans upside down.**

4. Charge the system with refrigerant capacity.
   Refrigerant capacity: 850 ± 50 g (30 ± 2 oz)
5. When fully charged, close the low pressure valve and the refrigerant cans. Check the system.
6. Close the high pressure stop valve.
7. Open the low pressure valve and gradually open the high pressure valve. When both pressure gauge are the same, close the low pressure stop valve and stop the engine.
8. Disconnect the charge hose quickly.
9. Check the system for leaks using a leak detector.
   NOTE: Particularly check for leaks around the compressor, condenser, and receiver-dryer.

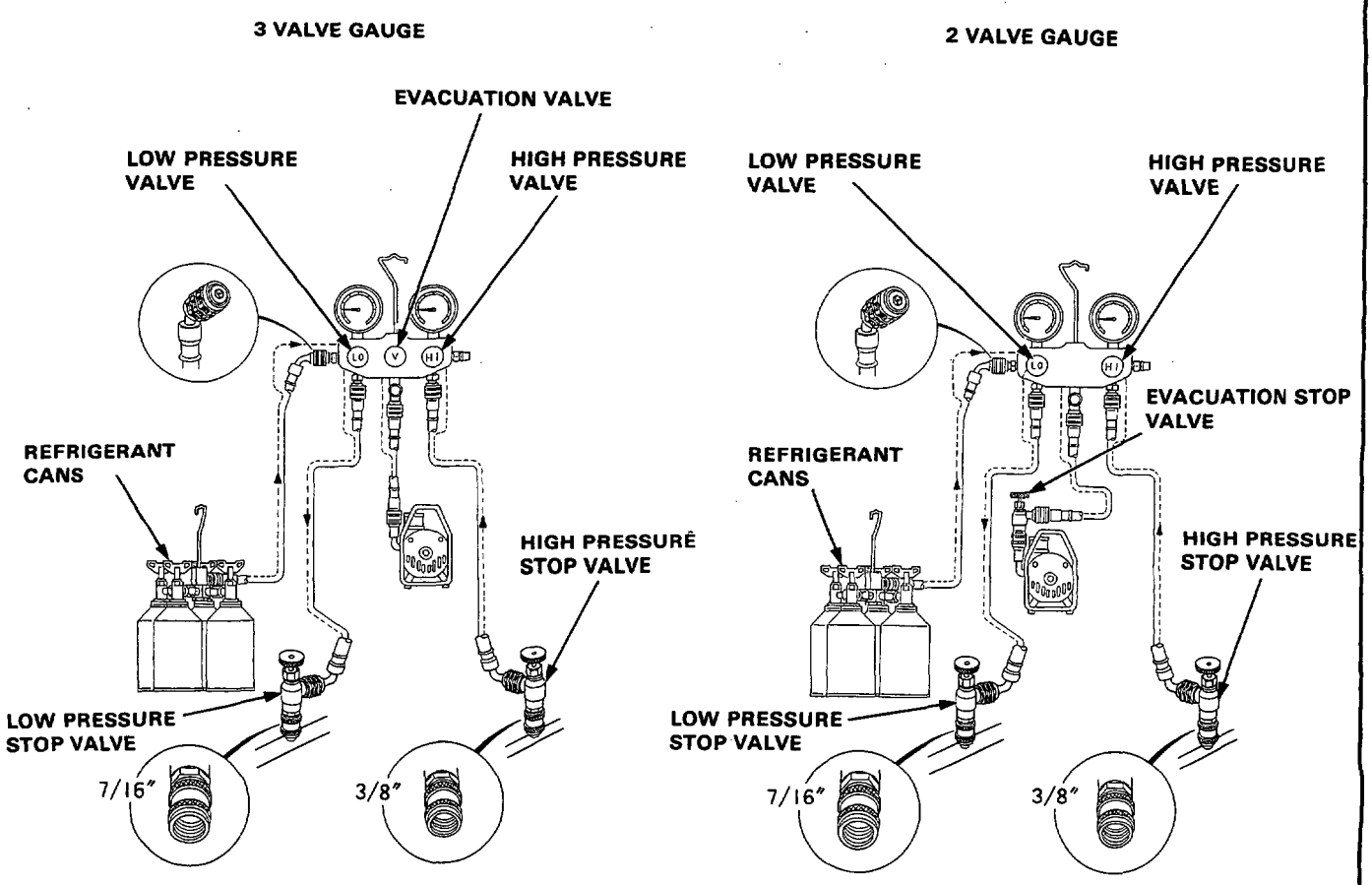

System Charging

Supplement

The following are the procedures to be adhered to when servicing air conditioners to reduce the amount of from R-12 into the atmoshpere.

WARNING **When handling refrigerant (R-12):**

- **Always wear eye protection.**
- **Donot let refrigerant get on your skin or in your eyes. If it does:**
  - **Do not rub your eyes or skin.**
  - **Splash large quantities of cool water in your eyes or on your skin.**
  - **Rush to a physician or hospital for immediate ment. Do not attempt to treat it yourself.**
- **Keep refrigerant containers (cans of R-12) stored below 40°C (100°F).**
- **Keep away from open flame. Refrigerant, although non-flammable, will produce poisonous gas if burned.**
- **Work in well-ventilated area. Refrigerant evaporates quickly, and can force all the air out of a small, enclosed area.**

CAUTION: Do not overcharge the system; the compressor will be damaged.

1. Connect the gauge as shown, close both pressure stop valves. Purge air from the charge hose A, then loosen the stop valve connector.
2. Attach apump and refrigerant containers (can:250 g x 2) as shown.
   NOTE: Do not open cans.
3. Open both pressure valves and evacuation valve (2 valve gauge: evacuation stop valve), start the pump. The low gauge should indicate above 700 mmHg (27 in-Hg), then run the pump about 1 minute.
4. Close both pressure valves and evacuation valve (2 valve gauge: evacuation stop valve). Open both pressure stop valve.
5. Start the engine and turn on A/C switch.
6. Stop the engine and check for leaks using a leak detector.
   NOTE: Particularly check for leaks around the compressor, condenser, and receiver-dryer.
7. Test the system using the pressure test and inspection data.
   Test condition:
   - Start the engine.
   - Turn the air mix dial (lever) to COOL.
   - Turn the function control switch (lever) on
   - Turn the recirculation control switch on
   - Turn the heater fan switch on "E" (MAX).

   If there is insufficient refrigerant in system, continue to charge system.
8. Open one or two cans, open the low pressure gauge. Charge the system untill there are no bubbles in the sight glass.

WARNING

- **Do not open the high gauge valve.**
- **Do not turn the cans upside down.**

9. After adding supplemental refrigerant, close the pressure stop valve. Open the low pressure valve and gradually open the high pressure valve. When pressure gauge read same, close the low pressure stop valve and stop the engine.
10. Disconnect the charge hose quickly.
11. Check the system for leaks using a leak detector.

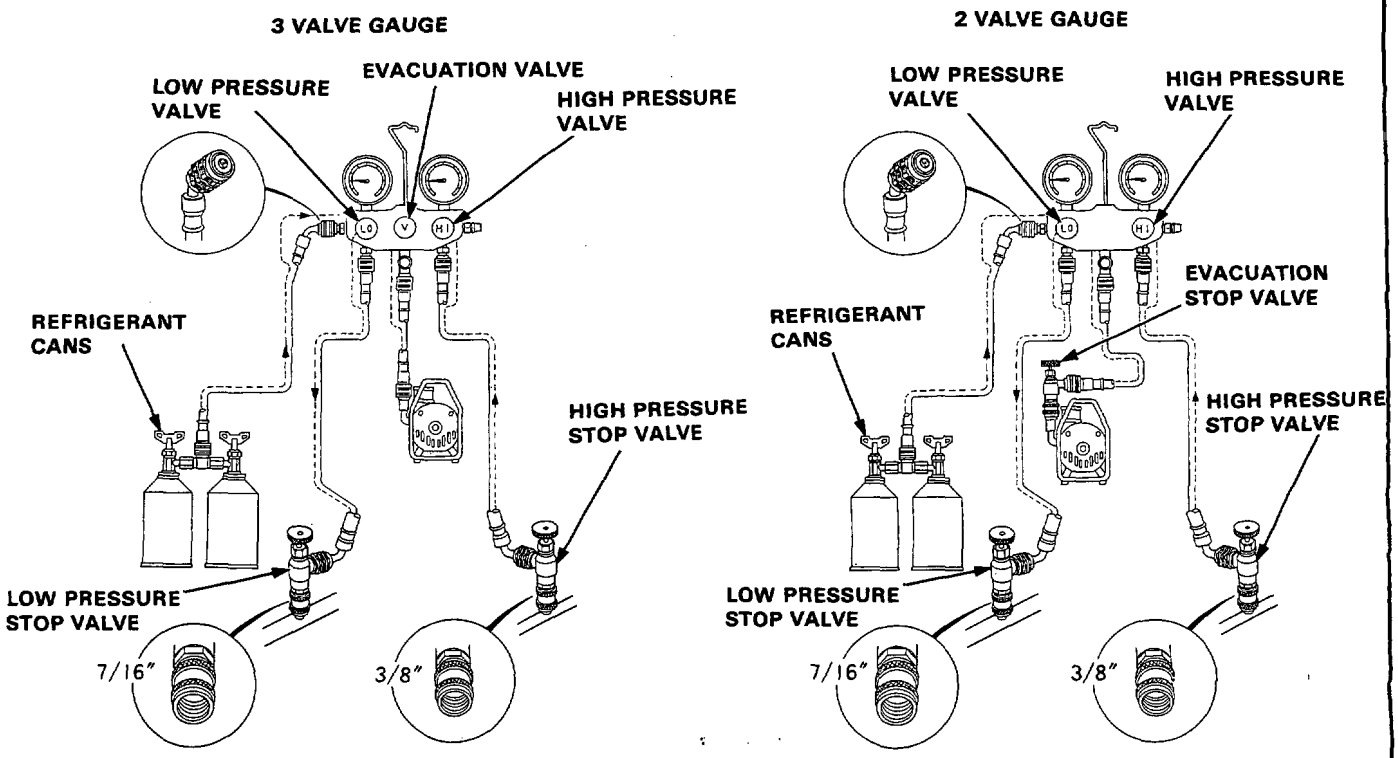

Wiring/Connector Location

SRS wire harness is routed near the air conditioner harness.

⚠WARNING All SRS wire harness and connectors are colored yellow. Do not use electrical test equipment on these circuit.

CAUTION: Be careful not to damage SRS wire harness when servicing the air conditioner harness.

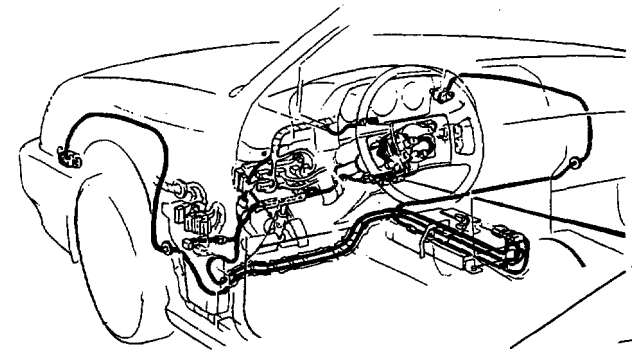

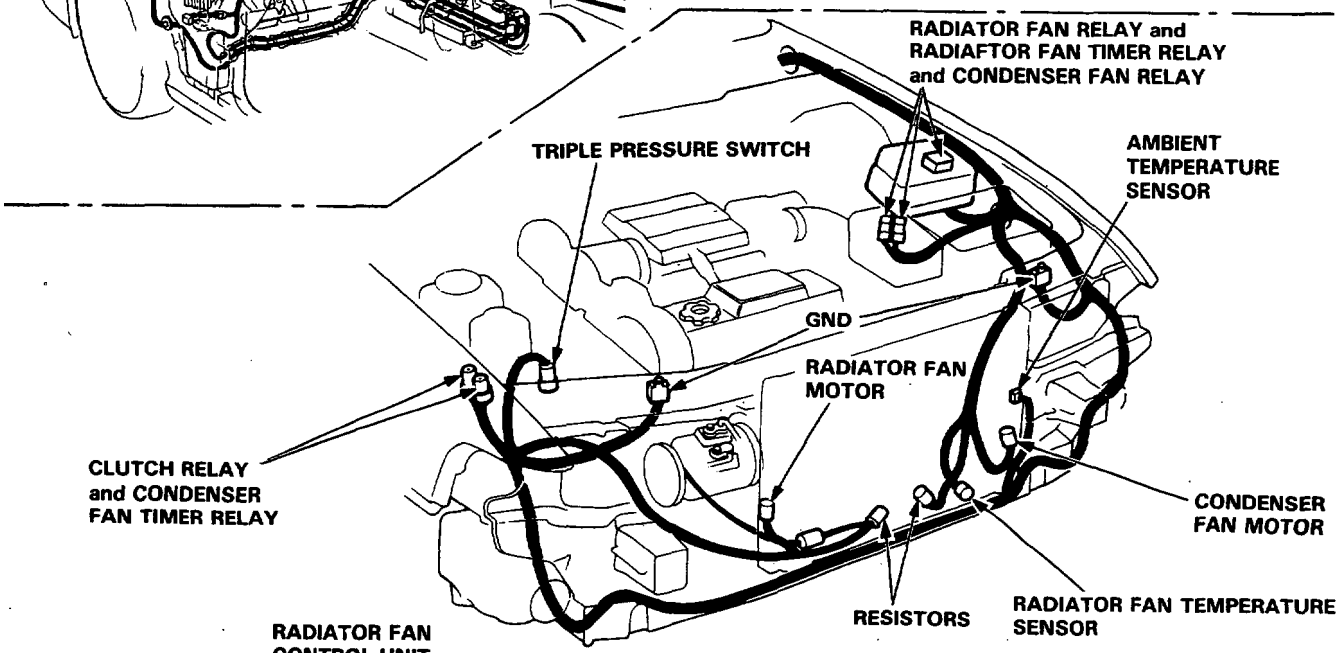

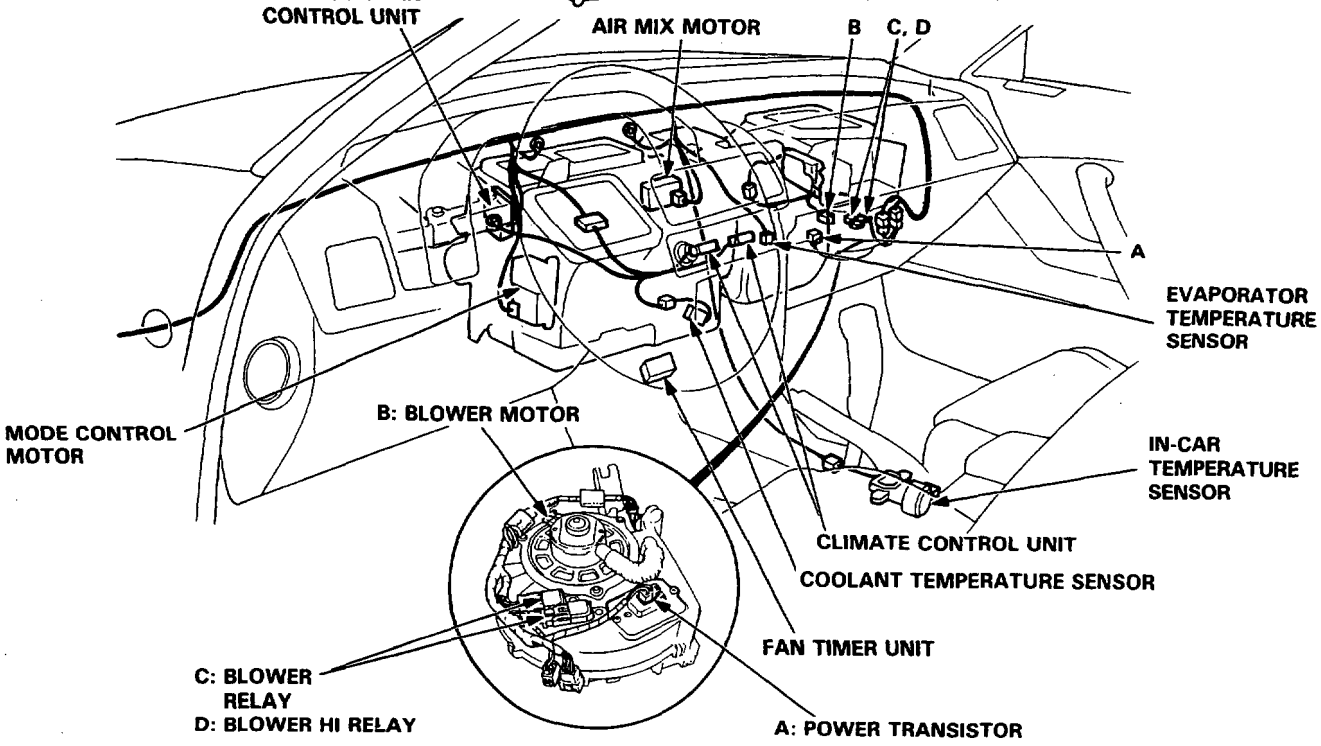

Special Tools

Ref. No.	Tool Number	Description	Q'ty	Remarks
①	07HAZ–SG00100	SRS Test Harness A	1	
②	07HAZ–SG00200	SRS Test Harness B	1	
③	07HAZ–SG00300	SRS Test Harness C	1	

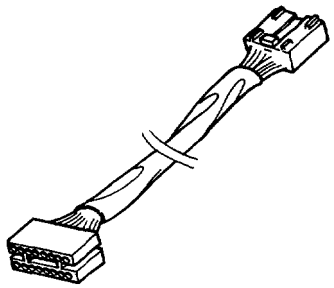

①

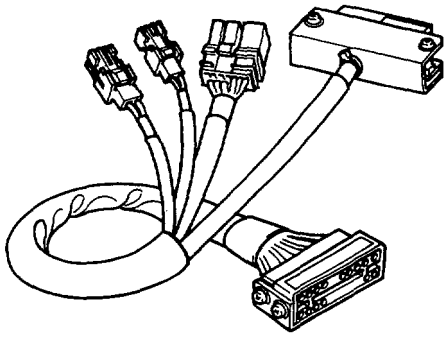

②

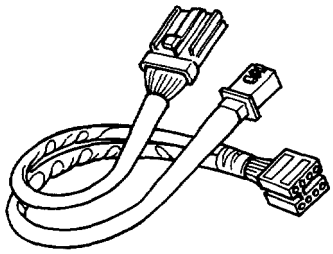

③

Troubleshooting

Troubleshooting Precautions

Before Troubleshooting

- Check the main fuse and the fuse box.
- Check the battery for damage, state of charge, and clean and tight connections.
- Check the alternator belt tension.

CAUTION:
- **Do not quick-charge a battery unless the battery ground cable has been disconnected, or you will damage the alternator diodes.**
- **Do not attempt to crank the engine with the battery ground cable incompletely connected or you will severely damage the wiring.**

While You're Working

- Make sure connectors are clean, and have no loose pins or receptacles.
- Make sure multiple pin connectors are packed with grease (except watertight connectors).

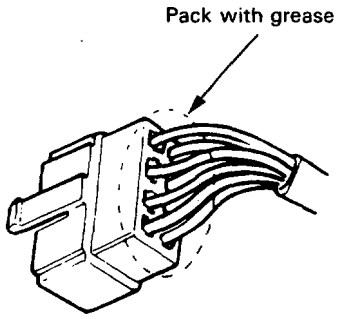

CAUTION:
- **Do not pull the wires when disconnecting a connector, pull only the connector housings.**
- **When connecting a connector, push it until it clicks into place.**

Supplemental Restraint System:
- When attaching any of the SRS test harnesses, push the connectors straight-in until they are secure; do not bend connector pins.
- Always use the SRS test harnesses. Do not use test probes directly on component connector pins or wires; you may damage them or the control unit.
- Always keep the short connector (RED) on the air bag connector when the harness is disconnected.

Five-Step Troubleshooting

1. **Verify The Complaint**

   Turn on all the components in the problem circuit to check the accuracy of the customer complaint. Note the symptoms. Do not begin disassembly or testing until you have narrowed down the problem area.

2. **Analyze The Schematic**

   Look up the schematic for the problem circuit. Determine how the circuit is supposed to work by tracing the current paths from the power feed through the circuit components to ground. If several circuits fail at the same time, the fuse or ground is a likely cause.

   Based on the symptoms and your understanding of the circuit operation, identify one or more possible causes of the problem.

3. **Isolate The Problem By Testing The Circuit**

   Make circuit tests to check the diagnosis you made in step 2. Keep in mind that a logical, simple procedure is the key to efficient troubleshooting. Test for the most likely cause of failure first. Try to make tests at points that are easily accessible.

4. **Fix The Problem**

   Once the specific problem is identified, make the repair. Be sure to use proper tools and safe procedures.

5. **Make Sure The Circuit Works**

   Turn on all components in the repaired circuit in all modes to make sure you ve fixed the entire problem. If the problem was a blown fuse, be sure to test all of the circuits on that fuse. Make sure no new problems turn up and the original problem does not recur.

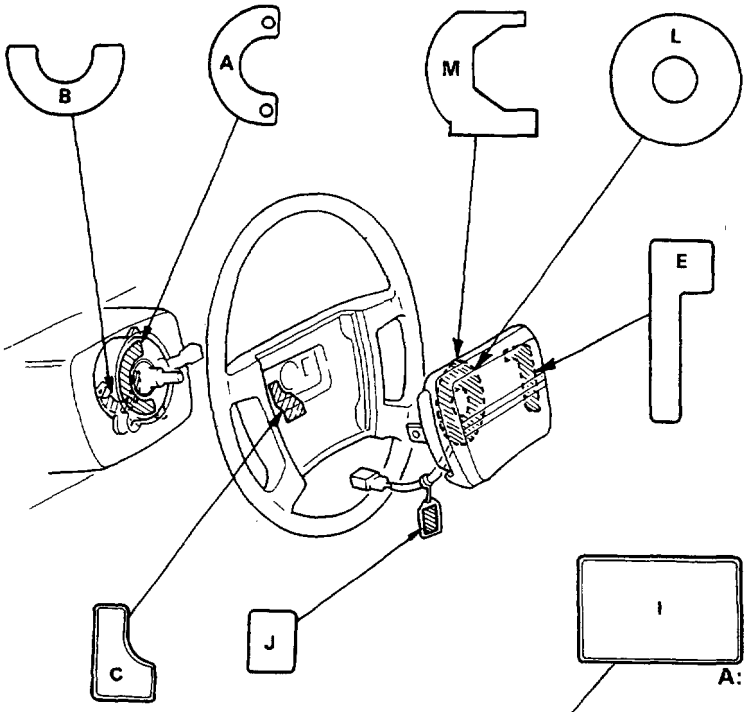

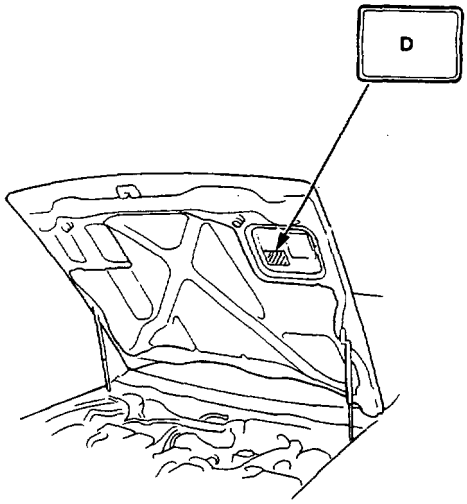

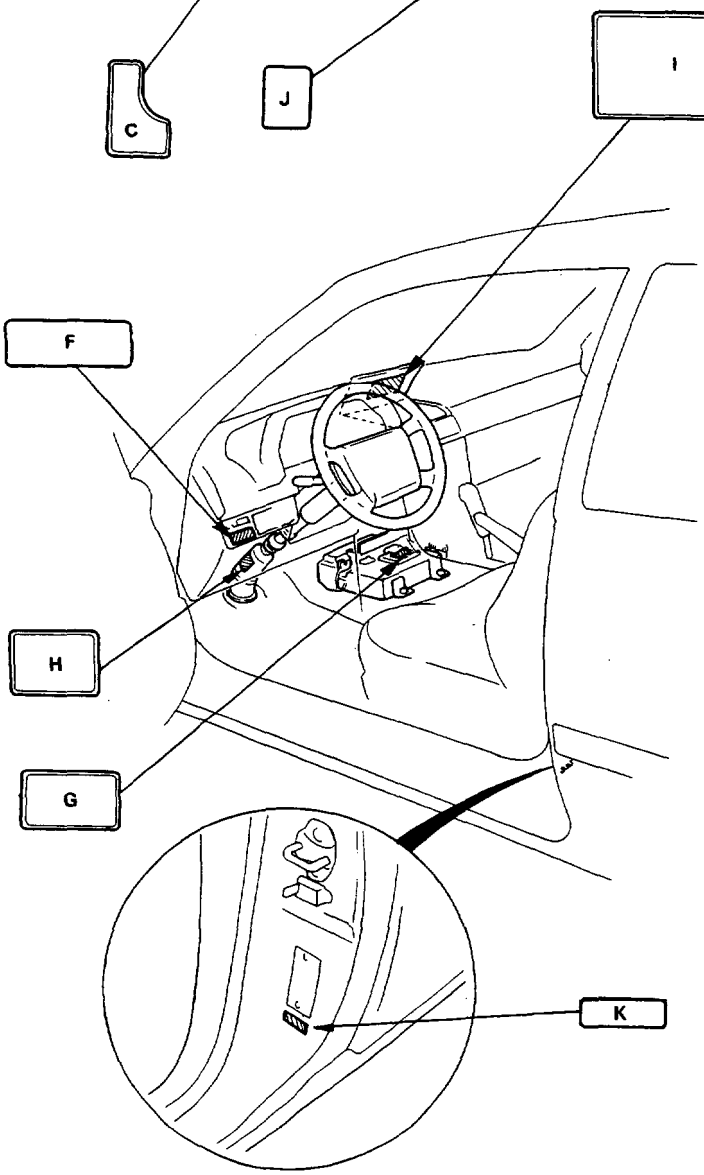

A: CABLE REEL CAUTION A.

CAUTION: SRS
BEFORE INSTALLING CABLE REEL
- CENTER THE FRONT WHEELS.
- ALIGN THE MARKS.
- READ SERVICE MANUAL.

B: CABLE REEL CAUTION B.

CAUTION: SRS
NO SERVICEABLE PARTS INSIDE; DO NOT DISASSEMBLE OR TAMPER.

C: STEERING WHEEL WARNING

WARNING: SRS
BEFORE INSTALLING STEERING WHEEL:
- CENTER THE FRONT WHEELS.
- ALIGN THE MARKS. (CABLE REEL)
- READ SERVICE MANUAL.

D: BULKHEAD WARNING

WARNING SRS
THIS VEHICLE IS EQUIPPED WITH A DRIVER AIRBAG AS A SUPPLEMENTAL RESTRAINT SYSTEM. (SRS) ALL S.R.S. ELECTRICAL WIRING AND CONNECTORS ARE COLORED YELLOW.
DO NOT USE ELECTRICAL TEST EQUIPMENT ON THESE CIRCUITS. TAMPERING WITH OR DISCONNECTING THE S.R.S. WIRING COULD RESULT IN ACCIDENTAL FIRING OF THE INFLATOR OR MAKE THE SYSTEM INOPERATIVE, WHICH MAY RESULT IN SERIOUS INJURY.

E: MODULE WARNING

WARNING SRS
TO PREVENT ACCIDENTAL DEPLOYMENT AND POSSIBLE INJURY:
ALWAYS INSTALL THE PROTECTIVE SHORT CONNECTOR ON THE INFLATOR CONNECTOR WHEN THE HARNESS IS DISCONNECTED.
UNDER NO CIRCUMSTANCES SHOULD DIAGNOSIS BE PERFORMED USING ELECTRICAL TEST EQUIPMENT OR PROBING DEVICES.
NO SERVICEABLE PARTS INSIDE. DO NOT DISASSEMBLE OR TAMPER.
STORE THE REMOVED AIRBAG ASSEMBLY WITH THE PAD SURFACE UP.
FOR SPECIAL HANDING OR STORAGE REFER TO THE HONDA SERVICE MANUAL.
DISPOSE OF THE ENTIRE UNIT AS DIRECTED.

F: DRIVER INFORMATION

SRS ALWAYS WEAR YOUR SEAT BELT.
- THIS CAR IS EQUIPPED WITH A DRIVER AIRBAG AS A SUPPLEMENTAL RESTRAINT SYSTEM (S.R.S.).
- IT IS DESIGNED TO SUPPLEMENT THE SEAT BELT.

G: SRS UNIT CAUTION

CAUTION SRS
- NO SERVICEABLE PARTS INSIDE.
- DO NOT DISASSEMBLE OR TAMPER.
- DO NOT DROP.
- STORE IN A CLEAN, DRY AREA.

H: STEERING COLUMN CAUTION

CAUTION SRS
TO AVOID DAMAGING THE S.R.S. CABLE OR REEL, WHICH COULD MAKE THE SYSTEM INOPERATIVE, REMOVE THE STEERING WHEEL BEFORE REMOVING THE STEERING SHAFT CONNECTOR BOLT.

I: POCKET INFORMATION

DRIVER'S AIRBAG INFORMATION SRS
- SUPPLEMENTAL RESTRAINT SYSTEM (SRS) CAN PROVIDE ADDITIONAL PROTECTION FOR THE DRIVER IN A FRONTAL COLLISION. A FUNCTIONAL DESCRIPTION OF THE SRS IS IN YOUR OWNER'S MANUAL.
- THE SYSTEM MUST BE INSPECTED TEN YEARS AFTER DATE OF MANUFACTURE, AS NOTED ON THE CERTIFICATION PLATE.
- ANY REPAIR, INSPECTION OR NEARBY ACCESSORY INSTALLATION SHOULD BE DONE BY AN HONDA DEALER.
- IF YOUR SRS INDICATOR:
  - LIGHTS WHILE DRIVING OR FLASHES;
  FAILS TO LIGHT OR STAYS ON AFTER THE IGNITION IS FIRST TURNED ON:
  SEE YOUR AUTHORIZED HONDA DEALER.

J: STEERING WHEEL WARNING

WARNING SRS
TO PREVENT ACCIDENTAL DEPLOYMENT AND POSSIBLE INJURY:
ALWAYS INSTALL THE PROTECTIVE SHORT CONNECTOR ON THE INFLATOR CONNECTOR WHEN THE HARNESS IS DISCONNECTED.

K: LABEL AIRBAG

L: INFLATOR LABEL

DANGER POISON
KEEP OUT OF THE REACH OF CHILDREN
CONTAINS SODIUM AZIDE AND POTASSIUM NITRATE. CONTENTS ARE POISONOUS AND EXTREMELY FLAMMABLE. CONTACT WITH ACID, WATER, OR HEAVY METALS MAY PRODUCE HARMFUL AND IRRITATING GASES OR EXPLOSIVE COMPOUNDS. DO NOT DISMANTLE, INCINERATE OR BRING INTO CONTACT WITH ELECTRICITY OR STORE AT TEMPERATURES EXCEEDING 93°C (200°F).
FIRST AID: IF CONTENTS ARE SWALLOWED INDUCE VOMITING.
- FOR EYE CONTACT, FLUSH EYES WITH WATER FOR 15 MINUTES.
- IF GASES FROM ACID OR WATER CONTACT ARE INHALED, SEEK FRESH AIR. IN EVERY CASE, GET PROMPT MEDICAL ATTENTION.

M: INFLATOR COVER LABEL

DANGER SRS
EXPLOSIVE/FLAMMABLE
CONTACT WITH ACID, WATER, OR HEAVY METALS SUCH AS COPPER, LEAD, OR MERCURY, MAY PRODUCE HARMFUL AND IRRITATING GASES OR EXPLOSIVE COMPOUNDS. STORAGE TEMPERATURES MUST NOT EXCEED 93°C (200°F). FOR PROPER HANDLING, STORAGE, AND DISPOSAL PROCEDURES REFER TO THE HONDA SERVICE MANUAL.

POISON
CONTAINS POISONOUS SODIUM AZIDE AND POTASSIUM NITRATE.
FIRST AID:
IF CONTENTS ARE SWALLOWED, INDUCE VOMITING. FOR EYE CONTACT, FLUSH EYES WITH WATER FOR 15 MINUTES. IF GASES (FROM ACID OR WATER CONTACT) ARE INHALED, SEEK FRESH AIR. IN EVERY CASE, GET PROMPT MEDICAL ATTENTION.
KEEP OUT OF REACH OF CHILDREN.

Troubleshooting

General Precautions

1. Carefully inspect any SRS part before installing. Do not install any part that shows signs of being dropped or improperly handled, such as dents, cracks or deformation:

   - Airbag assy.
   - Front sensors.
   - Cable reel.
   - SRS unit

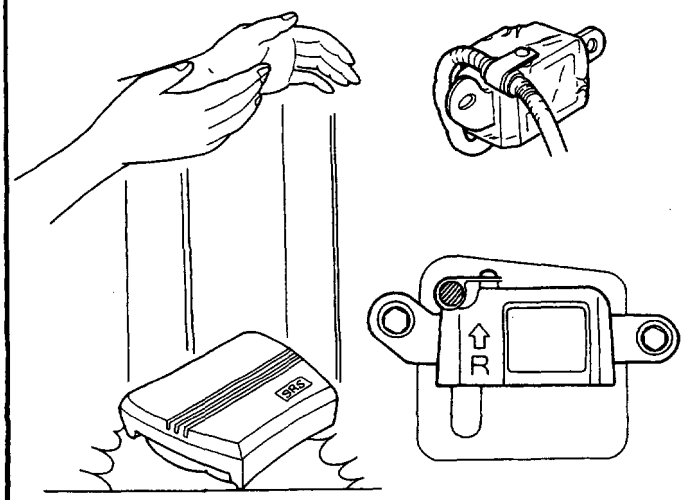

2. Use only the digital multimeter to check the system. If using an analog circuit tester, it may cause an accidental deployment and possible injury.
3. Do not install used SRS parts from another car. When repairing, use only new SRS parts.
4. Except when performing electrical inspections, always disconnect both the negative cable and positive cable at the battery before begining work.
5. Replacement of the lighting and wiper combination switches and cruise control switch can be done without removing the steering wheel:

   - Lighting and wiper combination switch replacement, see page 16-70.
   - Cruise control switch replacement, see page 16-80.

Airbag Assembly

Do not try to disassemble the airbag assembly. There are no separately serviceable parts. Once an airbag has been operated (deployed), it cannot be repaired or reused.

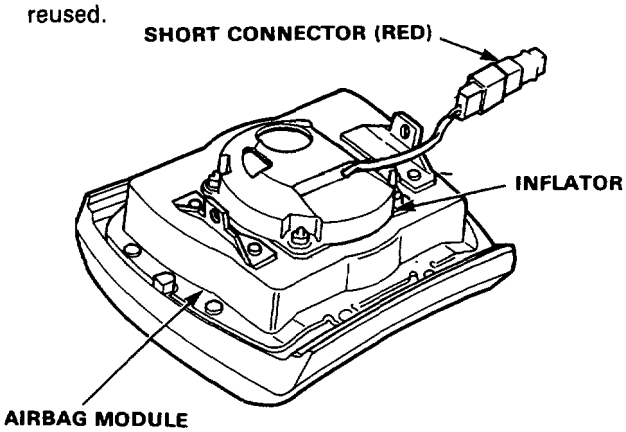

For temporary storage of the airbag assembly during service, please observe the following precautions:

1. Store the removed airbag assembly with the pad surface up.

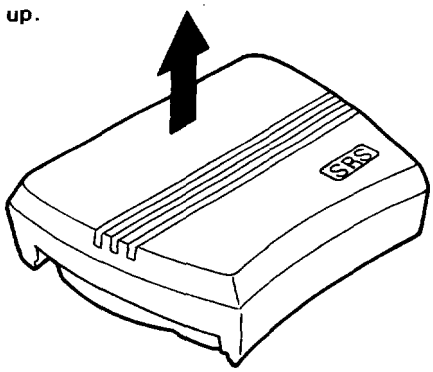

⚠WARNING If the airbag is improperly stored face down, accidental deployment could propel the unit with enough force to cause serious injury.

2. Store the removed airbag assembly on a secure flat surface away from any high heat source (exceeding 100°C/212°F) and free of any oil, grease, detergent or water.

   CAUTION: Improper hadling or storage can internally damage the airbag assembly, making it inoperative.
   If you suspect the airbag assembly has been damaged, install a new unit and refer to the Deployment/Disposal Procedures for scrapping of the damaged airbag.

1. *Steering Wheel and Cable Reel Alignment* :
   NOTE: To avoid misalignment of the steering wheel or airbag on reassembly, make sure the wheels are turned straight ahead before removing the steering wheel.

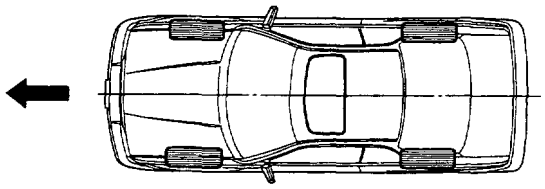

Rotate the cable reel clockwise until it stops.
Then rotate it counterclockwise (approximately two turns) until :

- The yellow gear tooth lines up with the mark on the cover.
- The arrow on the cable reel label points straight up.

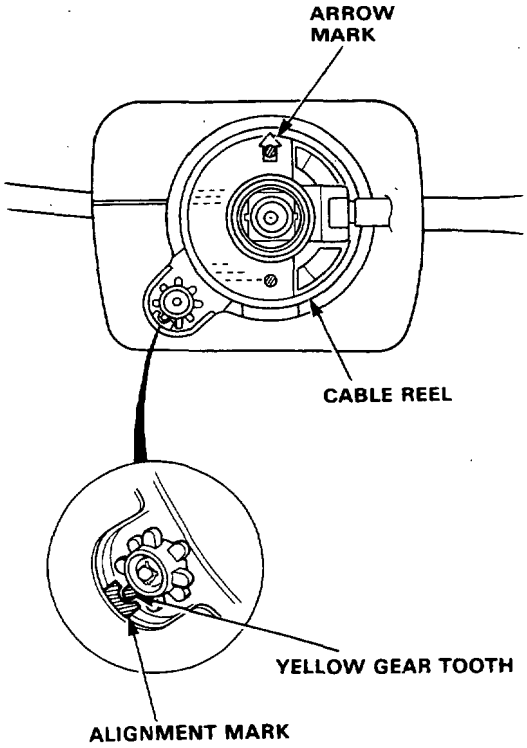

2. *Steering Column Removal*:

   CAUTION : Before removing the steering column, first disconnect the connector between the cable reel and the main SRS harness.

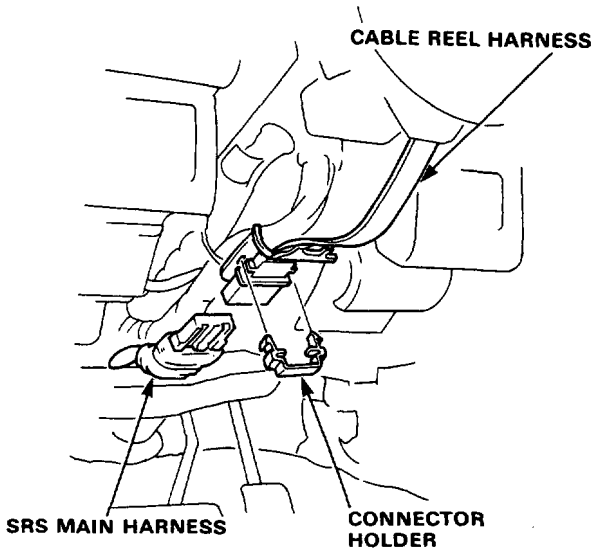

3. Steering wheel:
   Do not replace the original steering wheel with any other design, since it will make it impossible to properly install the airbag (Only use genuine HONDA replacement parts).

4. After reassembly confirm that the wheels are still straight ahead and that steering wheel spoke angle is correct. If minor spoke angle adjustment is necessary, do so only by adjustment of the tie rods, not by removing and repositioning the steering wheel.

Sensor Inspection

1. After any degree of front body damage, inspection both front sensors.
   Replace a sensor if there are any signs of dents, cracks or deformation.

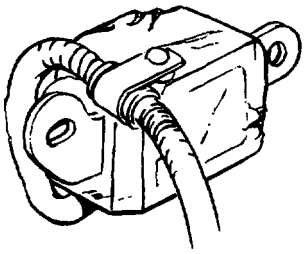

2. Be sure the sensors are installed securely.

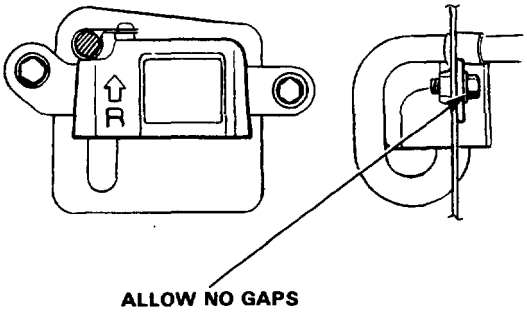

CAUTION:
Take extra care when painting or doing body work on any part of the front fender. Avoid direct exposure of the sensors or wiring to heat guns, welding or spraying equipment.

⚠WARNING
- **Disconnect both the negative and positive battery cables.**
- **Install the short connector before performing work on the front fenders or the SRS sensors.**

Wiring

1. Never attempt to modify, splice or repair SRS wiring.
   NOTE : SRS wiring can be identified by special yellow outer protective covering.

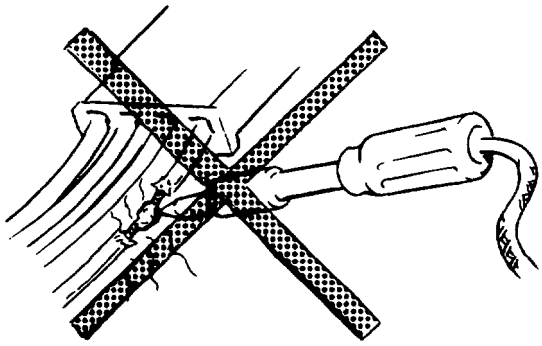

2. Be sure to install the harness wires so that they are not pinched or interfering with other car parts.

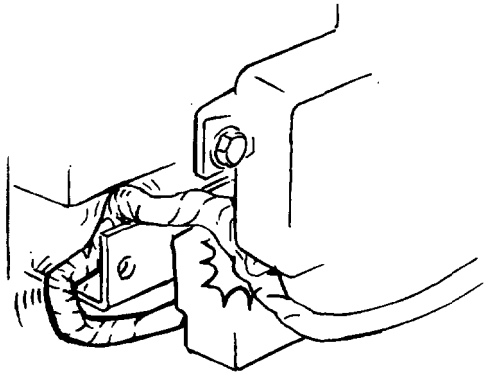

3. Make sure all SRS ground locations are clean and grounds are securely fastened for optimum metal-to-metal contact. Poor grounding can cause intermittent problems that are difficult to diagnose.

4. Installing Short Connector :

⚠WARNING To avoid accidental deployment and possible injury always install the protective short connector on the inflator connector when the harness is disconnected.

① Disconnect both the negative cable and positive cable from battery.
② Remove maintenance lid A below the airbag, then remove the red short connector.
③ Disconnect the connector between the airbag and cable reel.
④ Connect the short connector to the airbag side of the connector.
⑤ Reconnect both the positive cable and negative cable to battery.

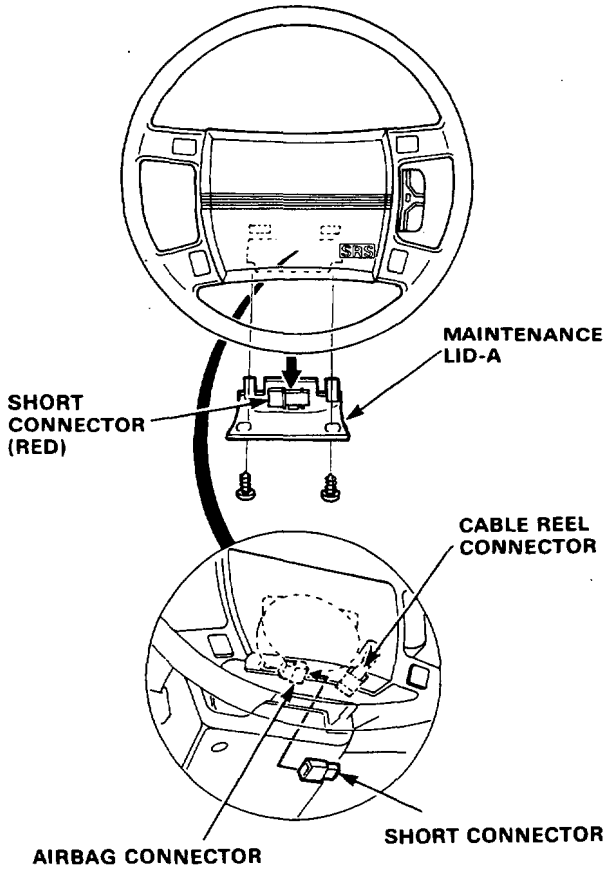

5. Disconnect the connectors at the SRS Unit and Fuse holder:

CAUTION: Avoid breaking the double-locked connectors on the SRS unit and fuse holder.

The connectors are double-locked; to remove them, first lift the connector lid with a thin screwdriver, then press the connector tab down and pull the connector out.
To reinstall a connector, push it into position until it clicks, then close the connector lid.

SRS Unit:

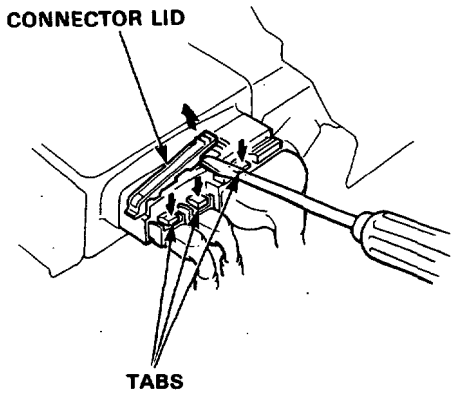

Fuse Holder:

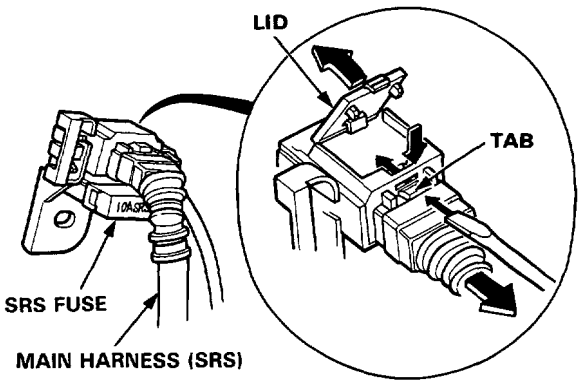

Troubleshooting

CAUTION:
Make sure all SRS ground locations are clean and grounds are securely attached.

NOTE:
- All SRS electrical wiring harnesses are covered with yellow outer insulation.
- Replace the entire affected SRS harness assembly if there is an open circuit or damage to the wiring.

* The figure shows LHD. KE model is symmetrical to the figure.

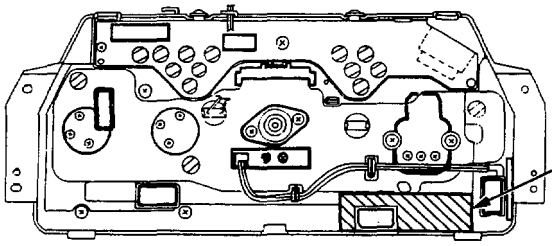

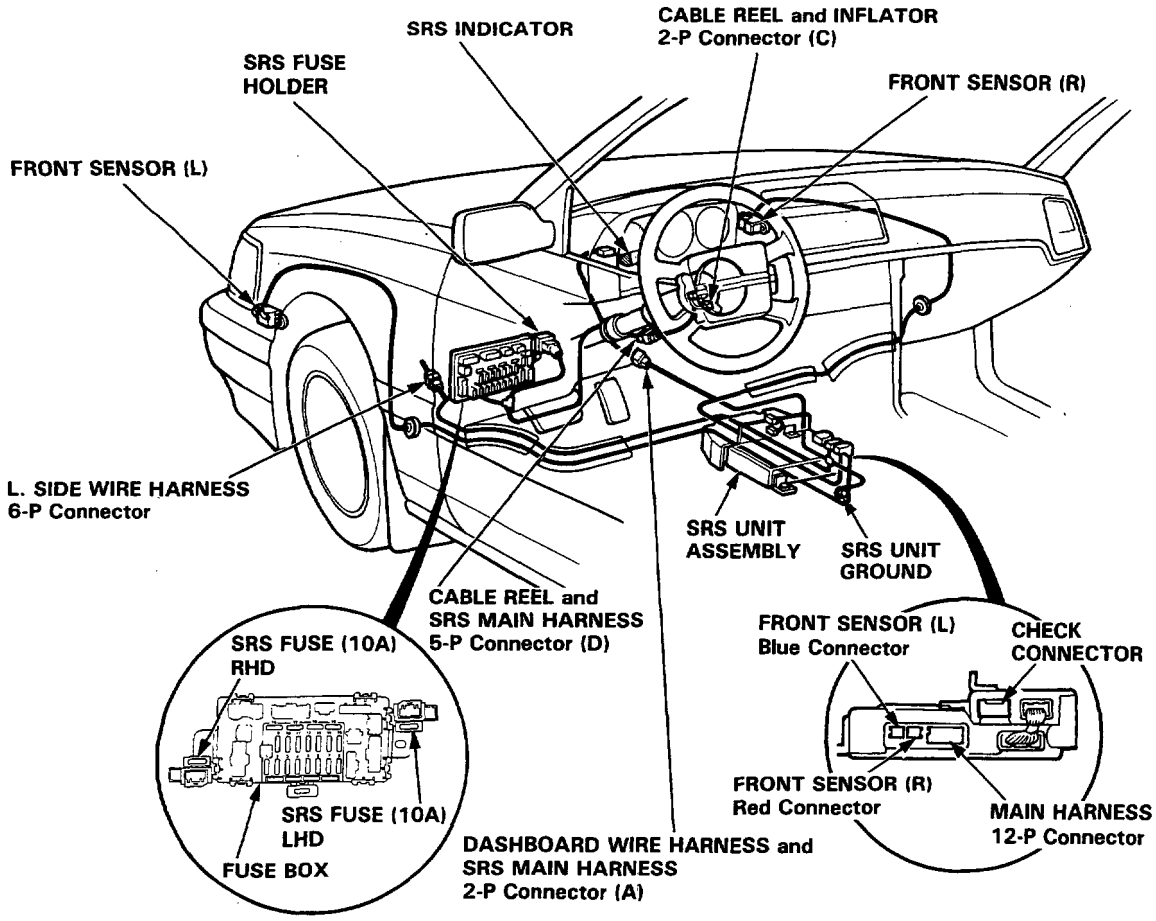

Fuses

Fuse/Relay Box (LHD)

Fuse Box (Located under dash, left side):

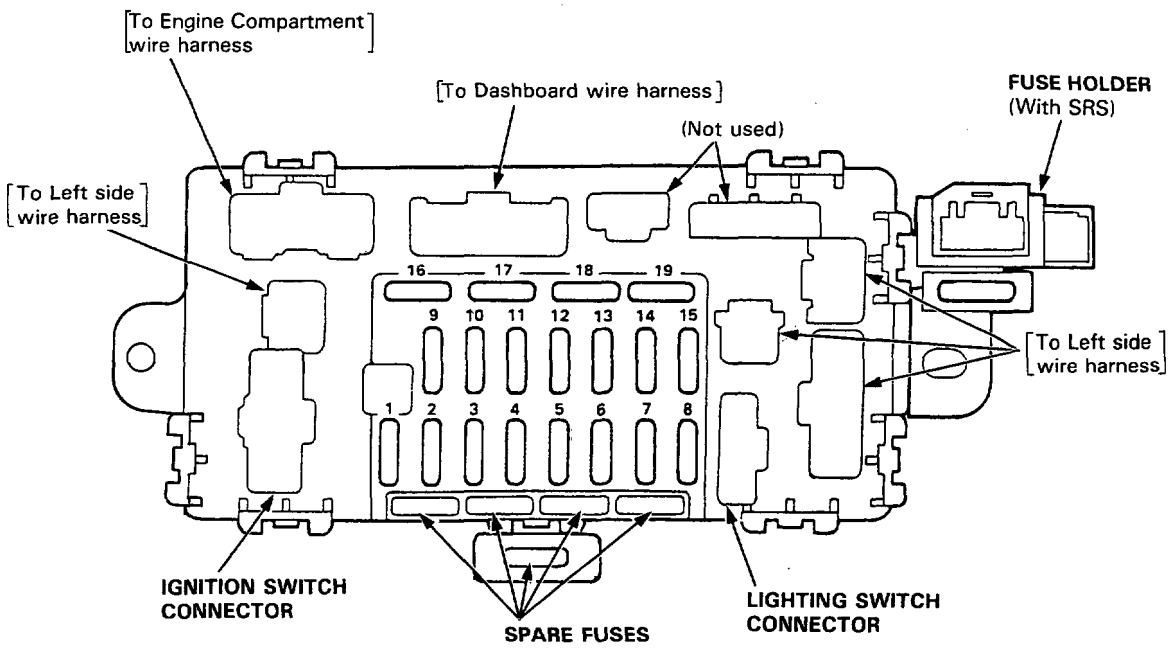

Relay Box (Located in engine compartment, left side):

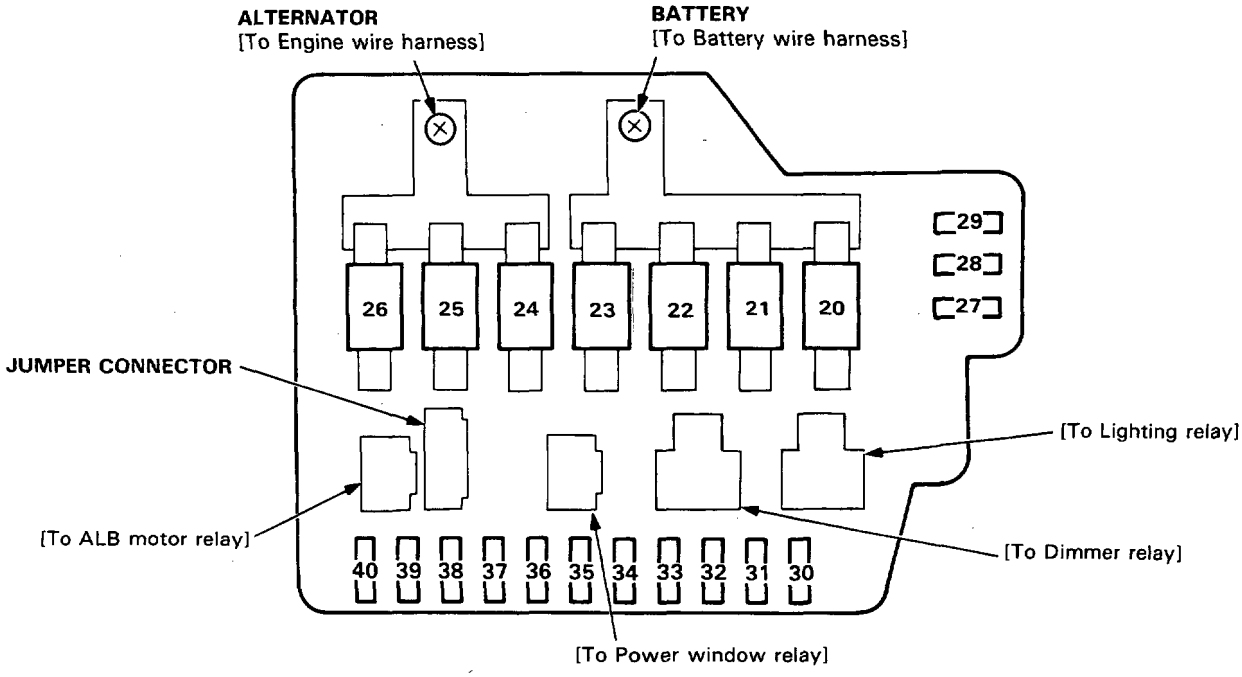

(RHD)

Fuse Box (Located under dash, right side):

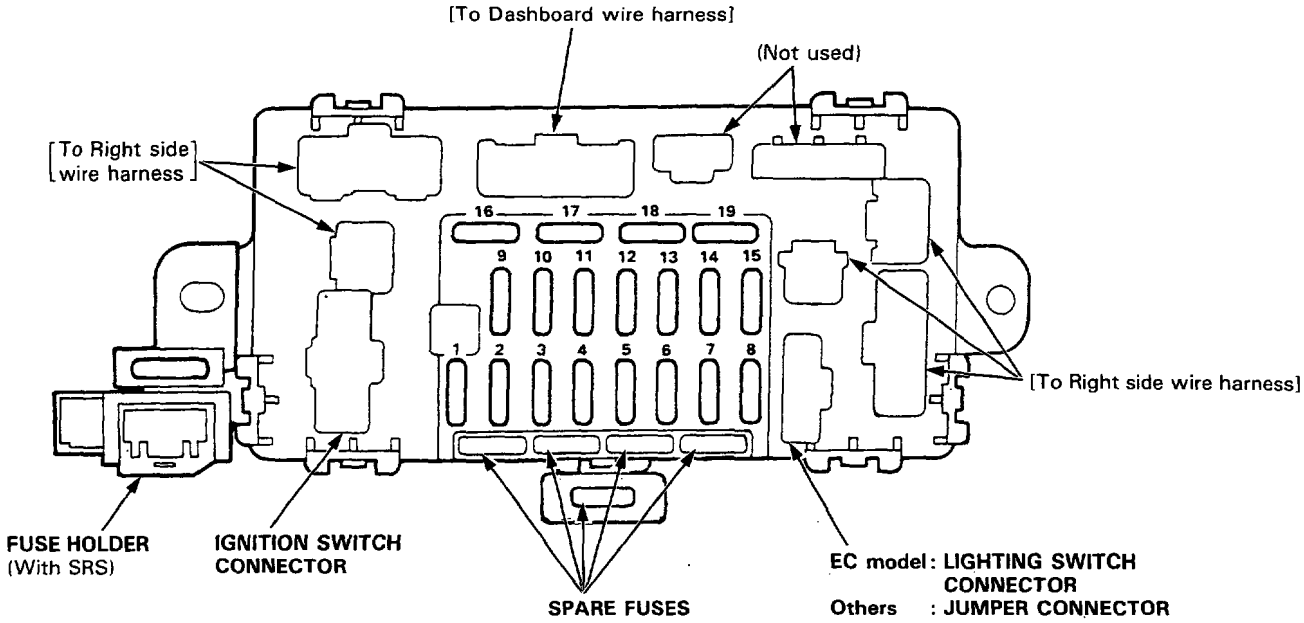

Relay Box (Located in engine compartment, left side):

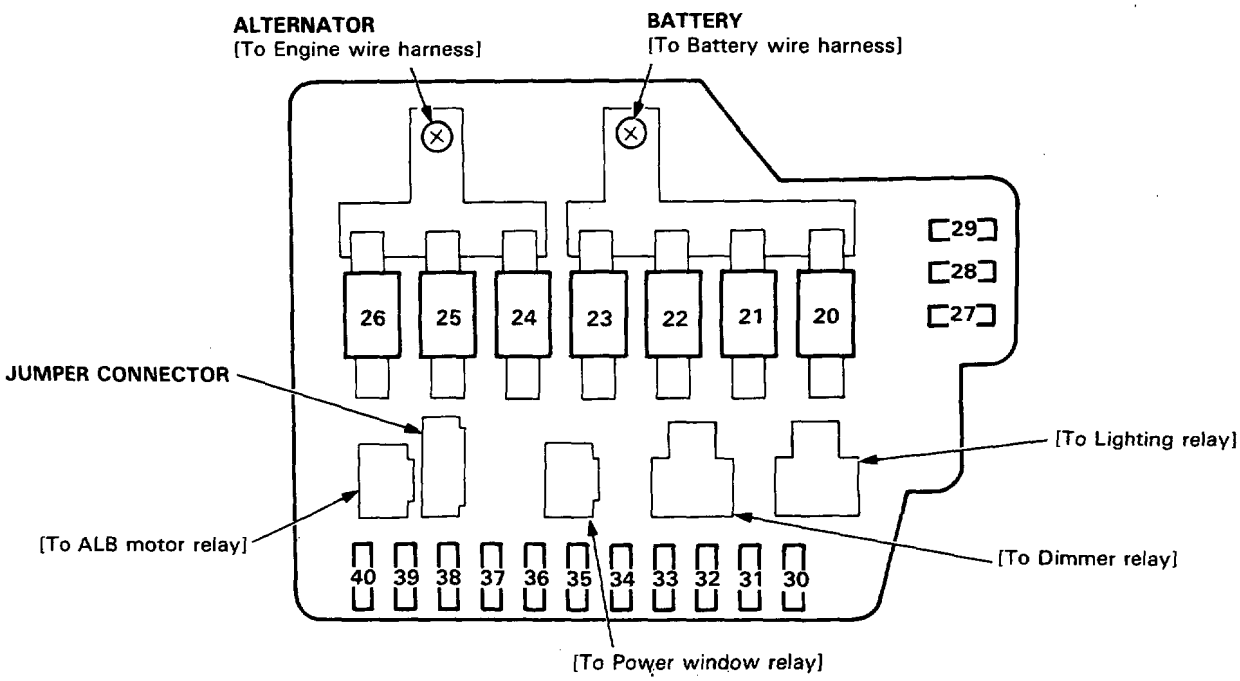

Power Distribution

Circuit Identification

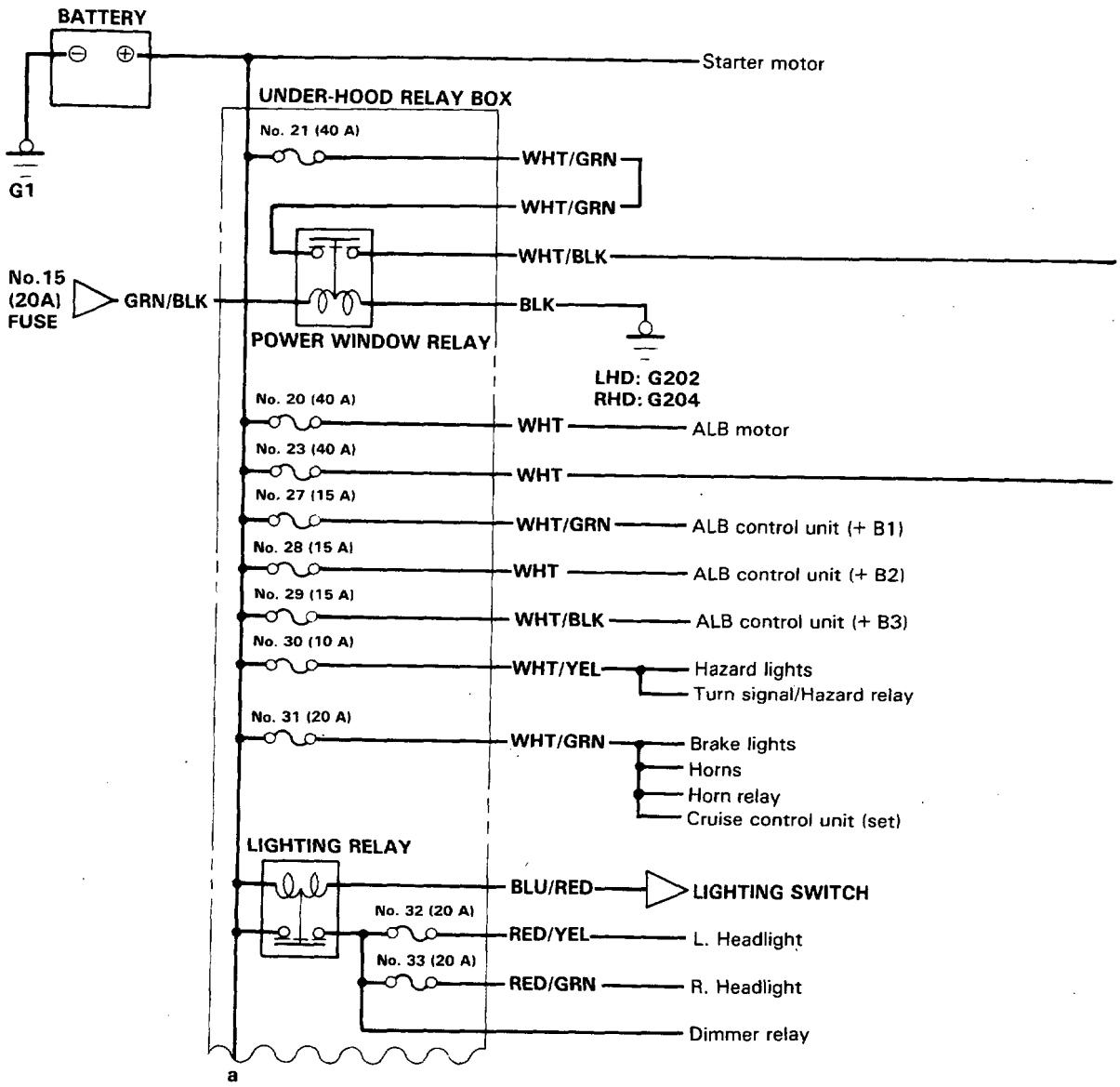

(To page 16-16)

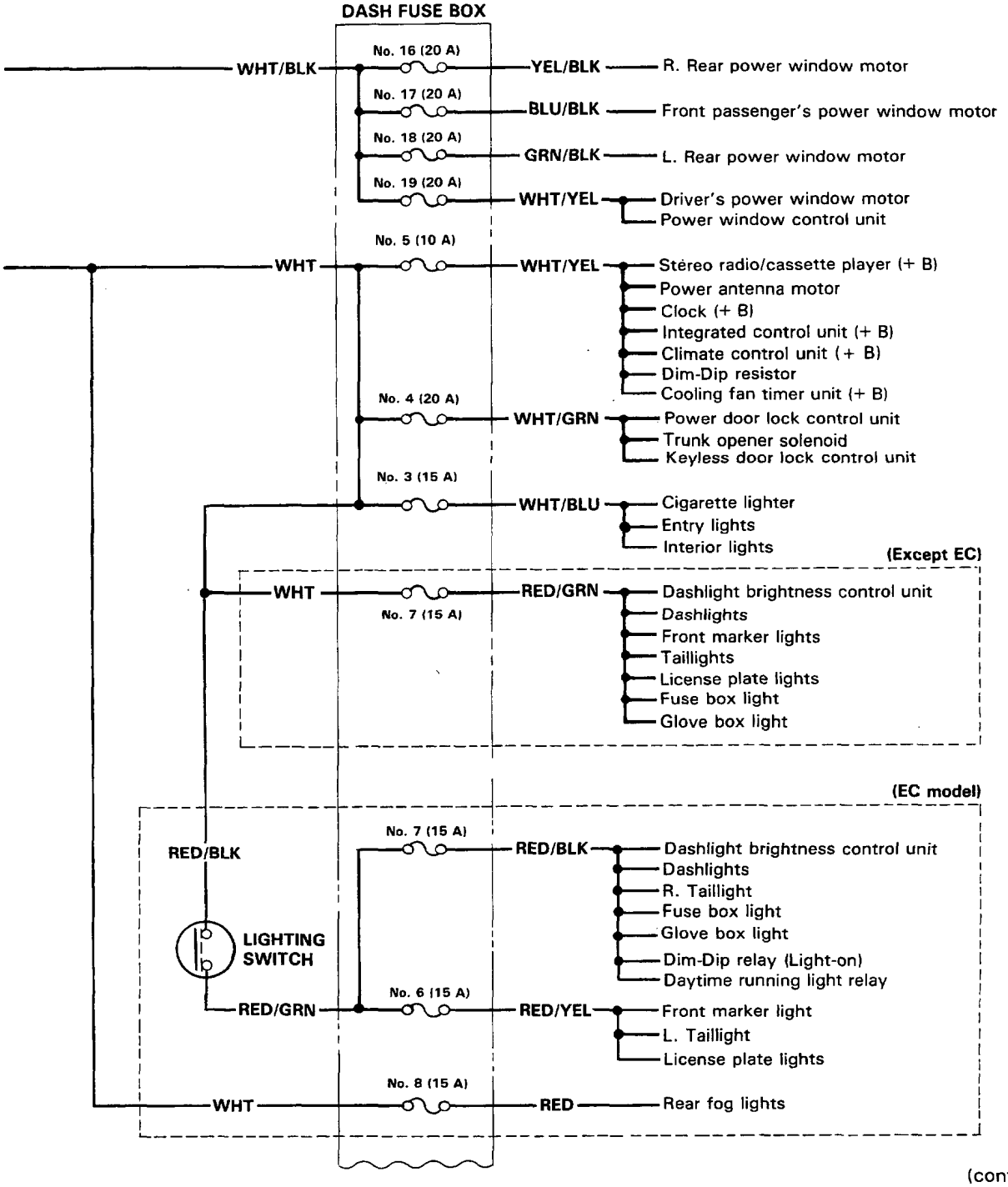
DASH FUSE BOX
No. 16 (20 A)
WHT/BLK
YEL/BLK
R. Rear power window motor
No. 17 (20 A)
BLU/BLK
Front passenger's power window motor
No. 18 (20 A)
GRN/BLK
L. Rear power window motor
No. 19 (20 A)
WHT/YEL
Driver's power window motor
Power window control unit
No. 5 (10 A)
WHT
WHT/YEL
Stereo radio/cassette player (+ B)
Power antenna motor
Clock (+ B)
Integrated control unit (+ B)
Climate control unit (+ B)
Dim-Dip resistor
Cooling fan timer unit (+ B)
No. 4 (20 A)
WHT/GRN
Power door lock control unit
Trunk opener solenoid
Keyless door lock control unit
No. 3 (15 A)
WHT/BLU
Cigarette lighter
Entry lights
Interior lights
(Except EC)
WHT
No. 7 (15 A)
RED/GRN
Dashlight brightness control unit
Dashlights
Front marker lights
Taillights
License plate lights
Fuse box light
Glove box light
(EC model)
RED/BLK
No. 7 (15 A)
RED/BLK
Dashlight brightness control unit
Dashlights
R. Taillight
Fuse box light
Glove box light
Dim-Dip relay (Light-on)
Daytime running light relay
LIGHTING SWITCH
RED/GRN
No. 6 (15 A)
RED/YEL
Front marker light
L. Taillight
License plate lights
No. 8 (15 A)
WHT
RED
Rear fog lights

(cont'd)

Power Distribution

Circuit Identification (cont'd)

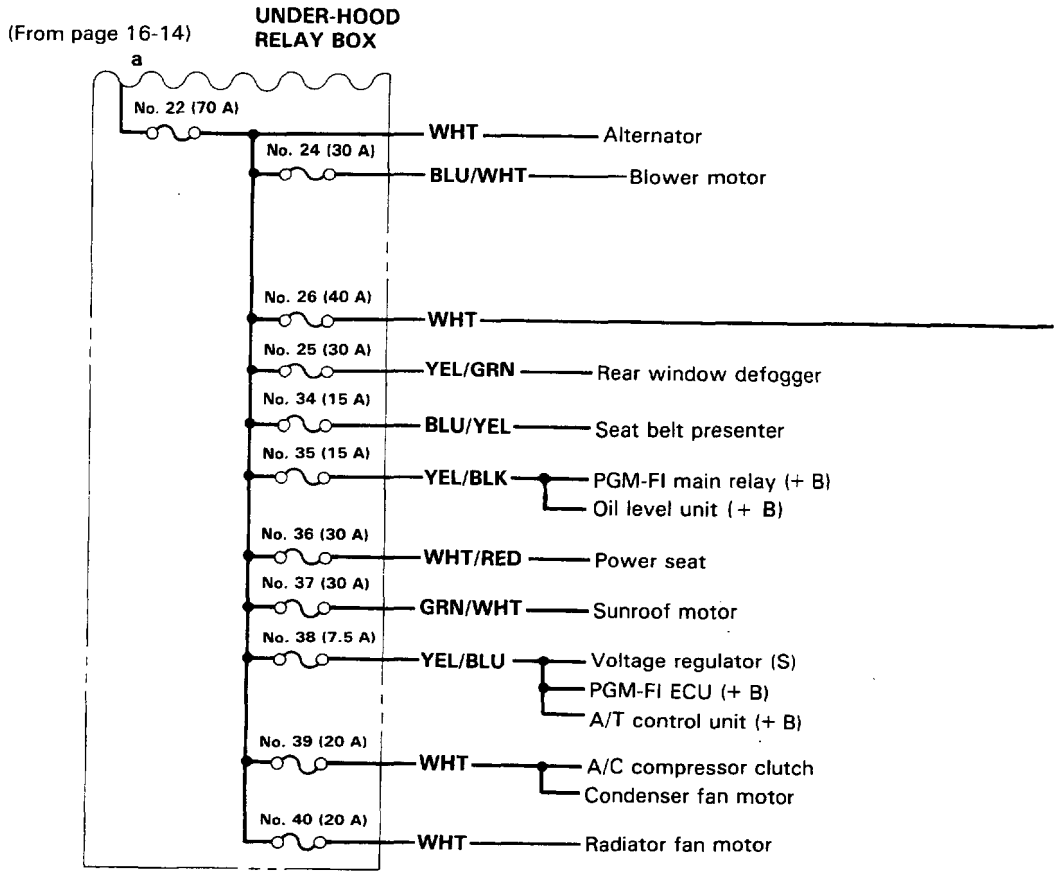

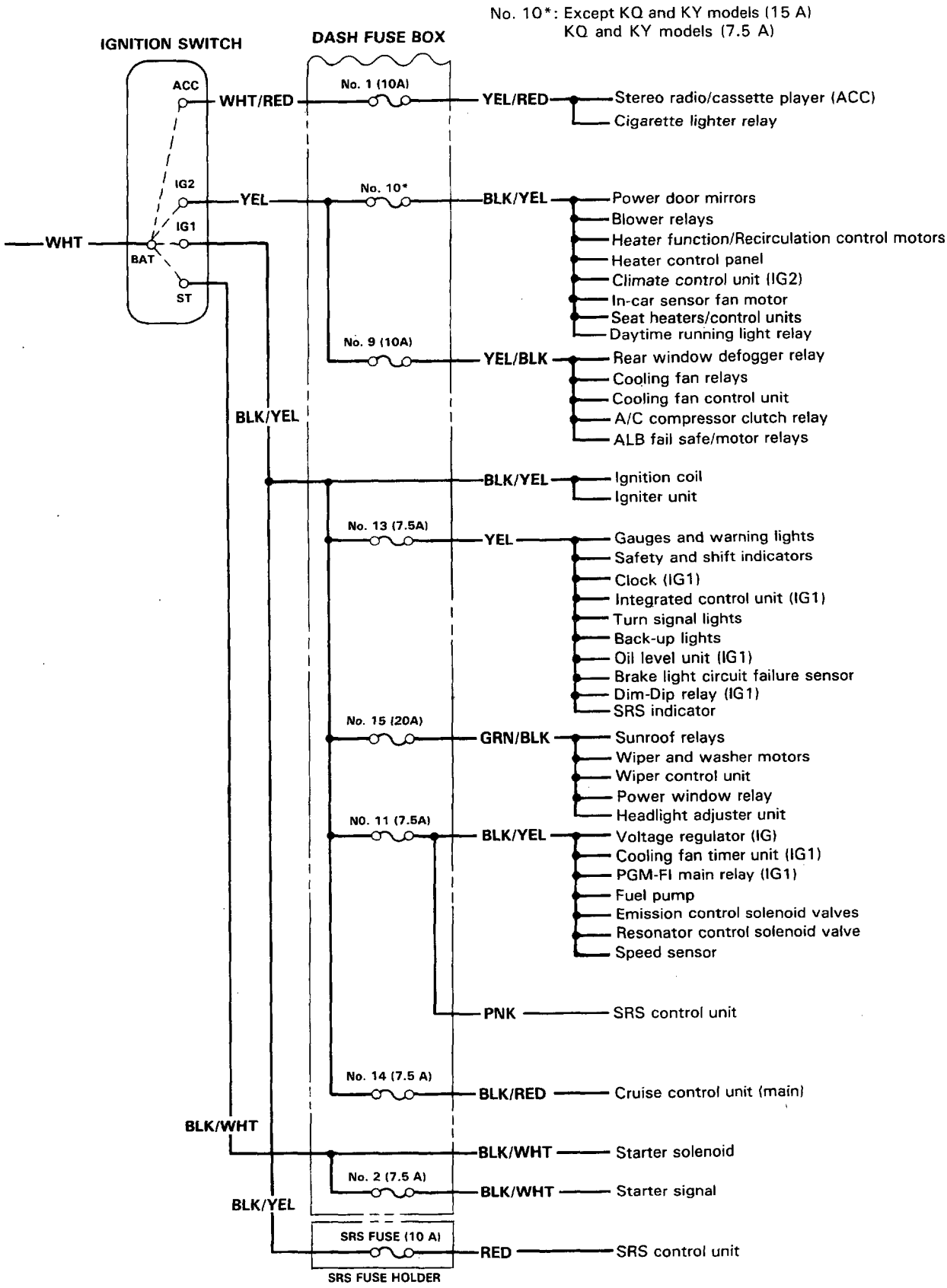
No. 10*: Except KQ and KY models (15 A)
KQ and KY models (7.5 A)
IGNITION SWITCH
DASH FUSE BOX
ACC
IG2
IG1
BAT
ST
WHT
WHT/RED
YEL
BLK/YEL
BLK/WHT
No. 1 (10A)
No. 10*
No. 9 (10A)
No. 13 (7.5A)
No. 15 (20A)
NO. 11 (7.5A)
No. 14 (7.5 A)
No. 2 (7.5 A)
SRS FUSE (10 A)
SRS FUSE HOLDER
YEL/RED
BLK/YEL
YEL/BLK
BLK/YEL
YEL
GRN/BLK
BLK/YEL
PNK
BLK/RED
BLK/WHT
BLK/WHT
RED
Stereo radio/cassette player (ACC)
Cigarette lighter relay
Power door mirrors
Blower relays
Heater function/Recirculation control motors
Heater control panel
Climate control unit (IG2)
In-car sensor fan motor
Seat heaters/control units
Daytime running light relay
Rear window defogger relay
Cooling fan relays
Cooling fan control unit
A/C compressor clutch relay
ALB fail safe/motor relays
Ignition coil
Igniter unit
Gauges and warning lights
Safety and shift indicators
Clock (IG1)
Integrated control unit (IG1)
Turn signal lights
Back-up lights
Oil level unit (IG1)
Brake light circuit failure sensor
Dim-Dip relay (IG1)
SRS indicator
Sunroof relays
Wiper and washer motors
Wiper control unit
Power window relay
Headlight adjuster unit
Voltage regulator (IG)
Cooling fan timer unit (IG1)
PGM-FI main relay (IG1)
Fuel pump
Emission control solenoid valves
Resonator control solenoid valve
Speed sensor
SRS control unit
Cruise control unit (main)
Starter solenoid
Starter signal
SRS control unit

Ground Distribution

Circuit Identification (LHD)

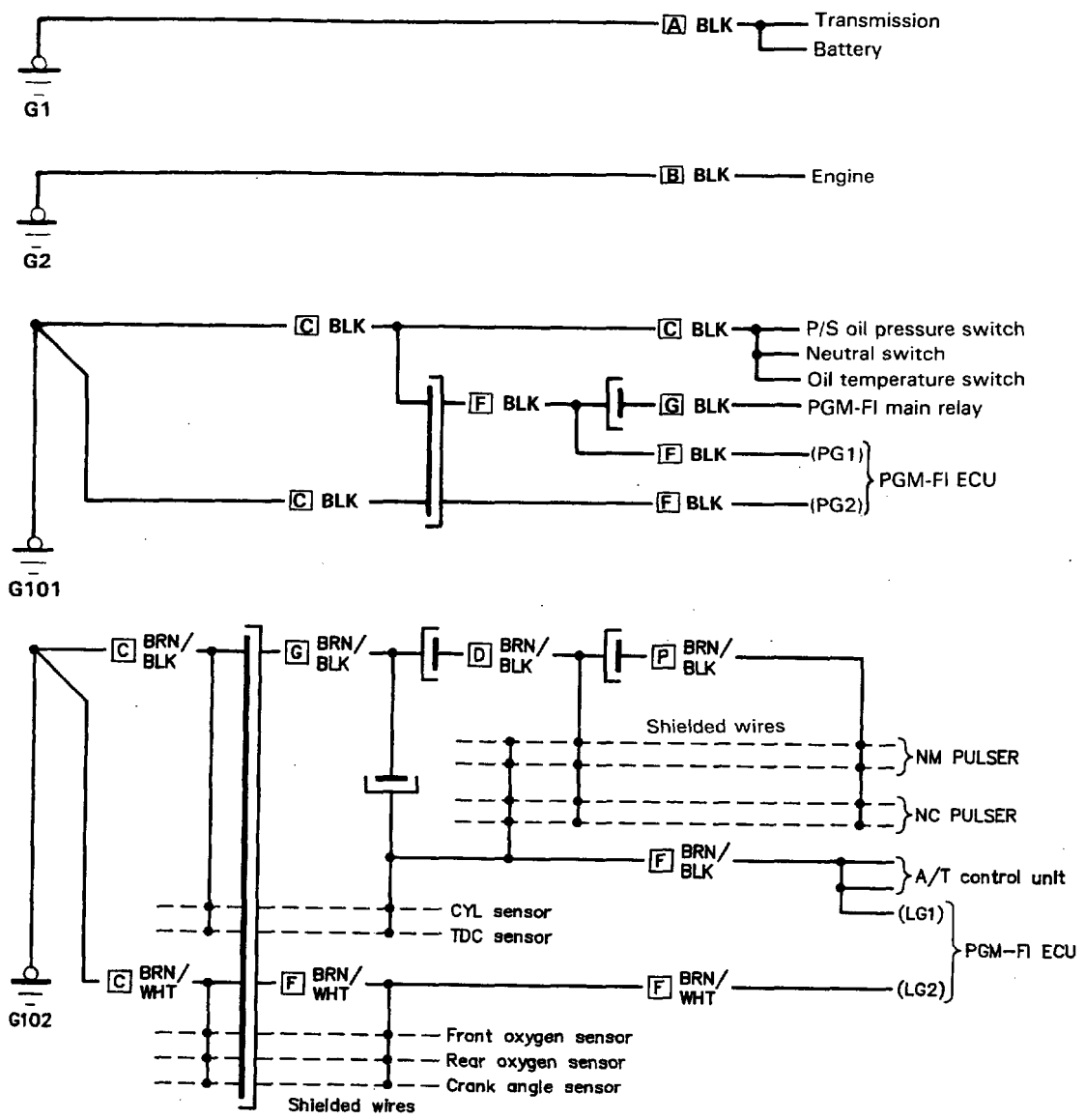

A: Battery ground wire
B: Engine ground wire
C: Engine wire harness
D: Engine compartment wire harness
F: Right side wire harness
G: Left side wire harness
P: Battery wire harness

(RHD)

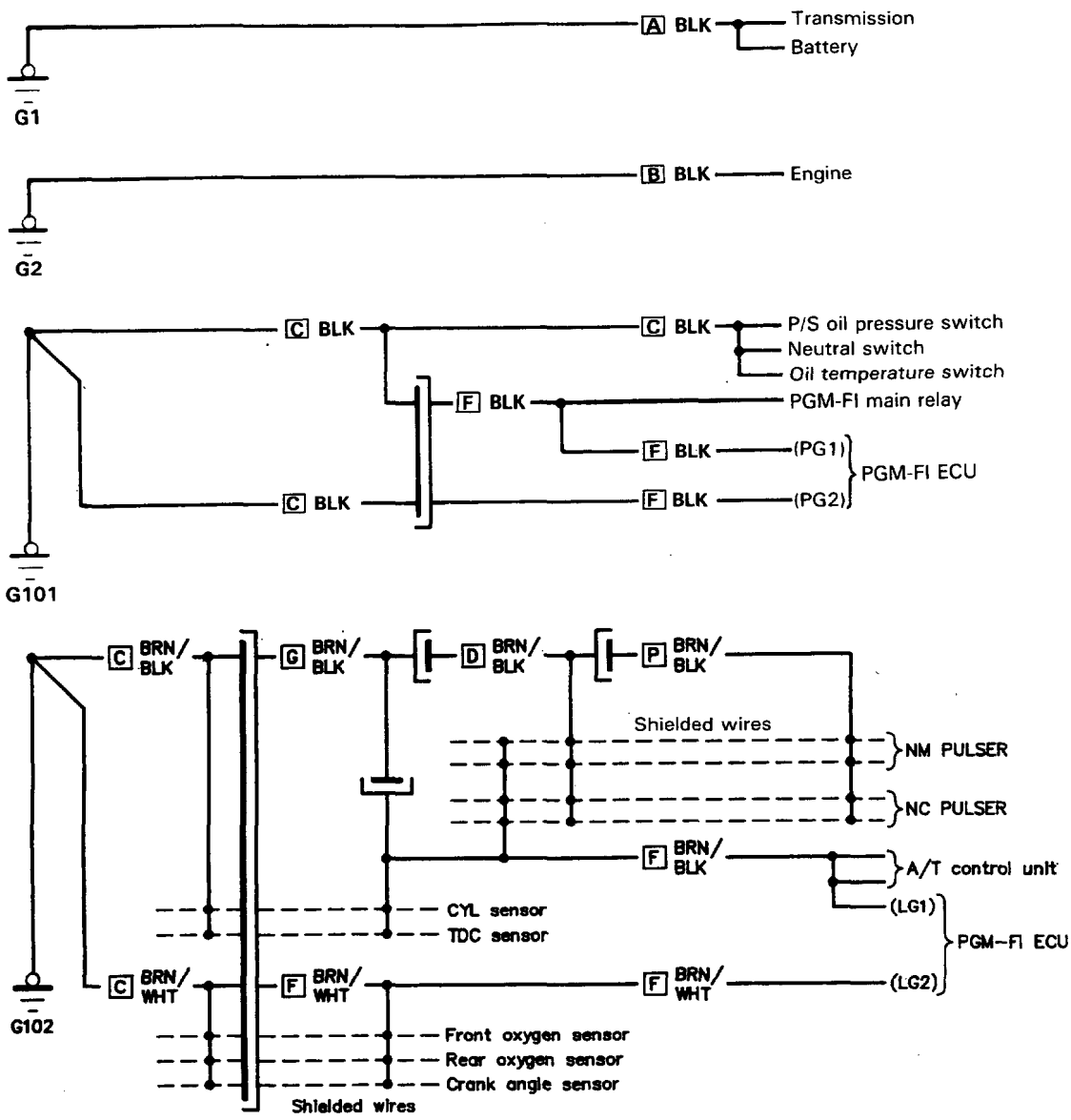

A: Battery ground wire
B: Engine ground wire
C: Engine wire harness
D: Engine compartment wire harness
F: Right side wire harness
P: Battery wire harness

(cont'd)

Ground Distribution

Circuit Identification (LHD)

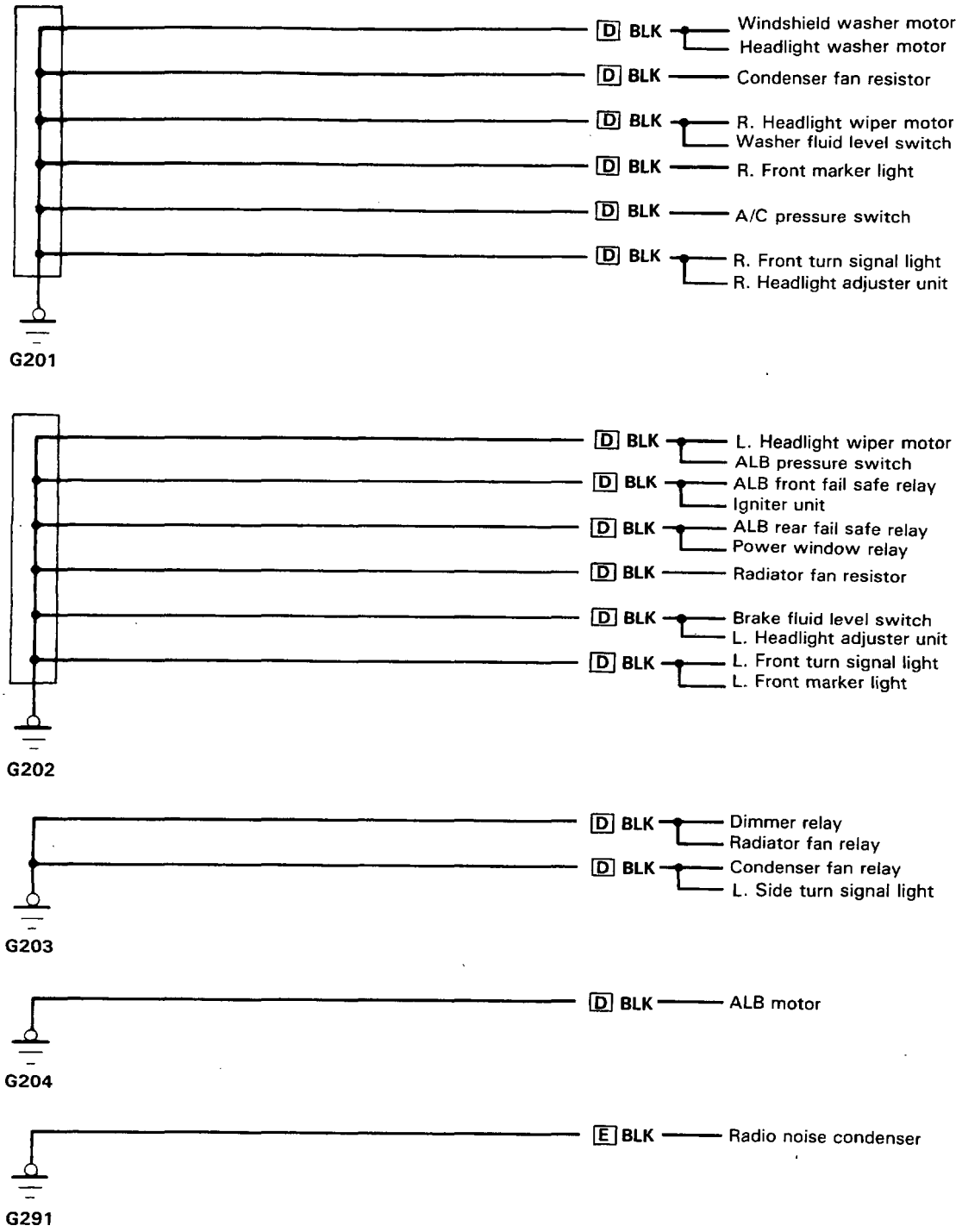

D: Engine compartment wire harness
E: Radio condenser ground wire

(RHD)

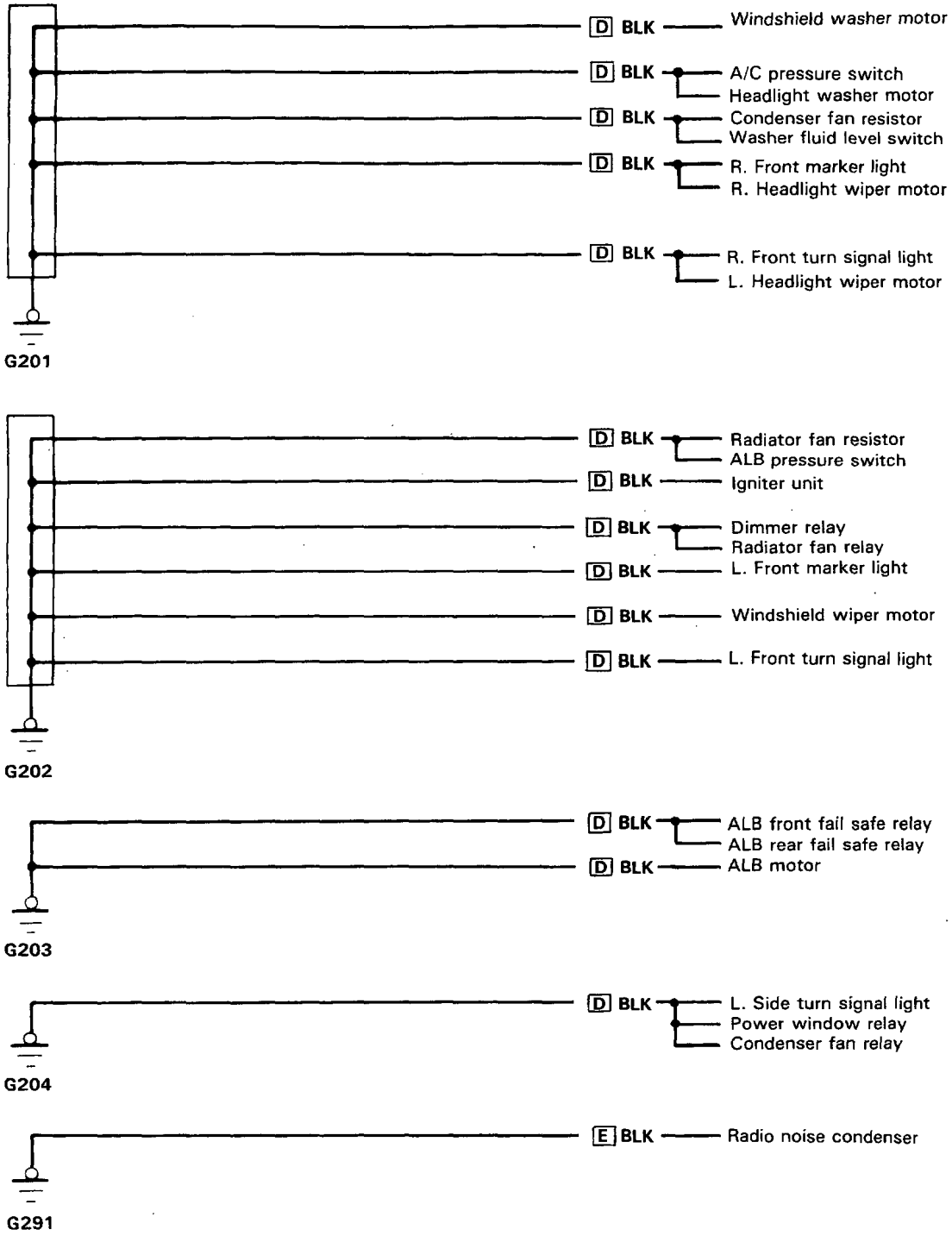

D: Engine compartment wire harness
E: Radio condenser ground wire

(cont'd)

Ground Distribution

Circuit Identification (LHD)

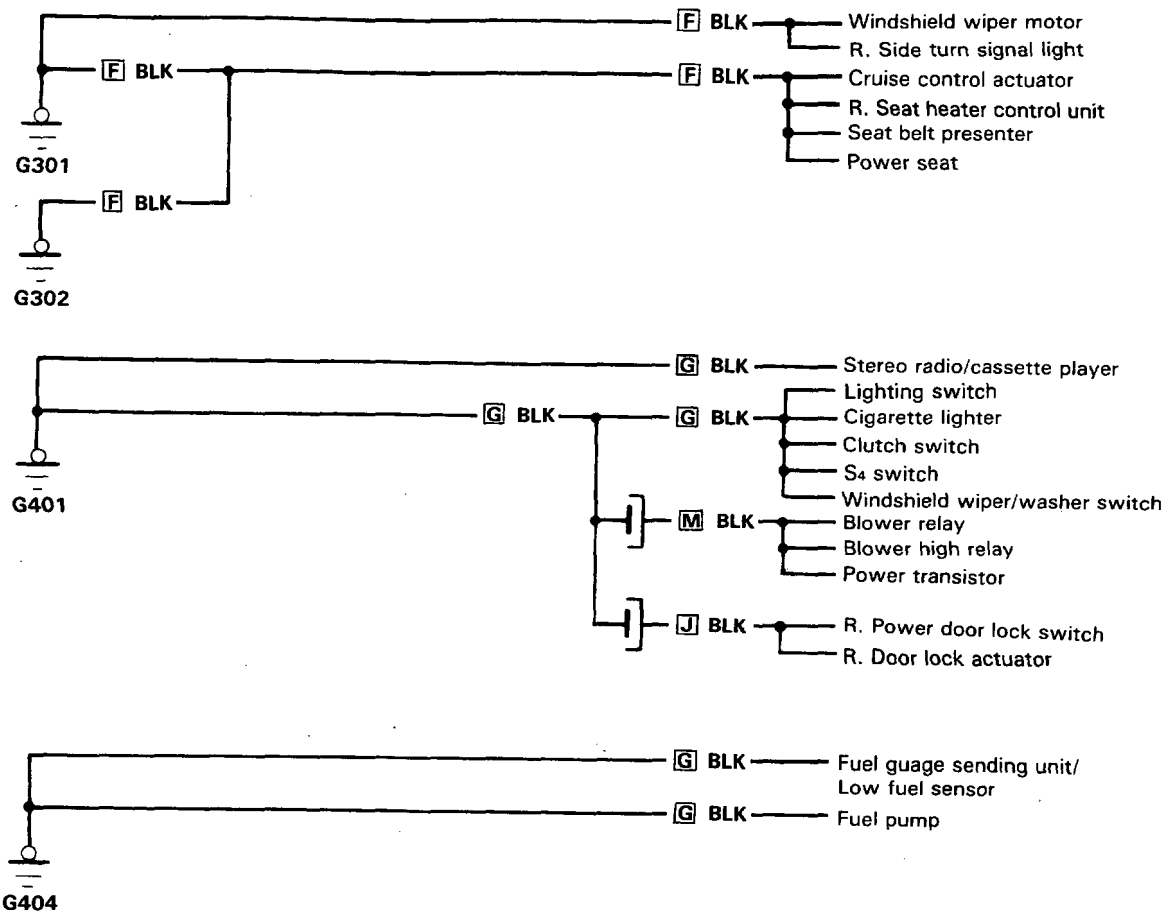

F: Right side wire harness
G: Left side wire harness
J: Passenger's door wire harness
M: Blower wire harness

(RHD)

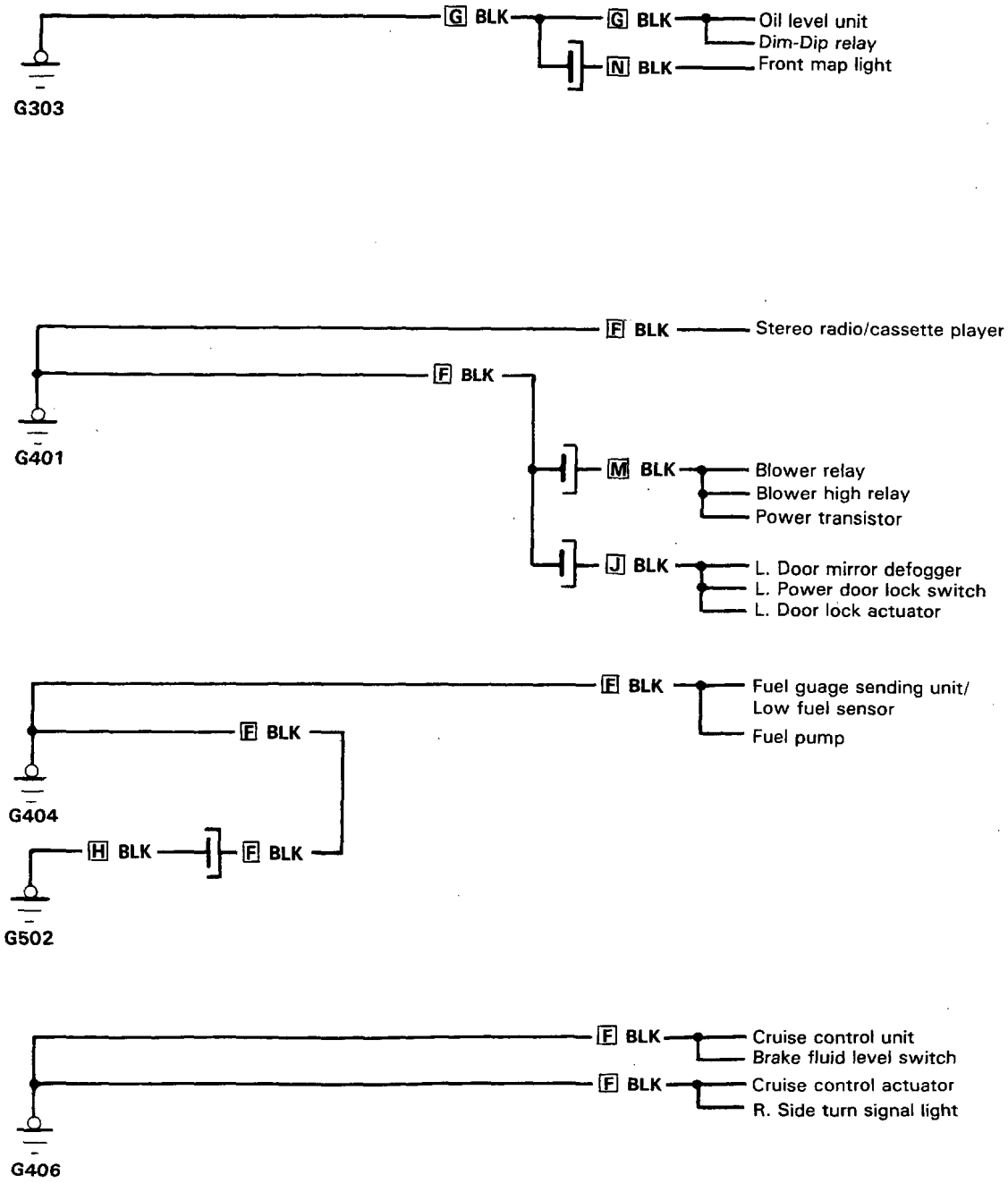

F: Right side wire harness
G: Left side wire harness
H: Rear wire harness
J: Passenger's door wire harness
M: Blower wire harness
N: Roof wires

(cont'd)

Ground Distribution

Circuit Identification (LHD)

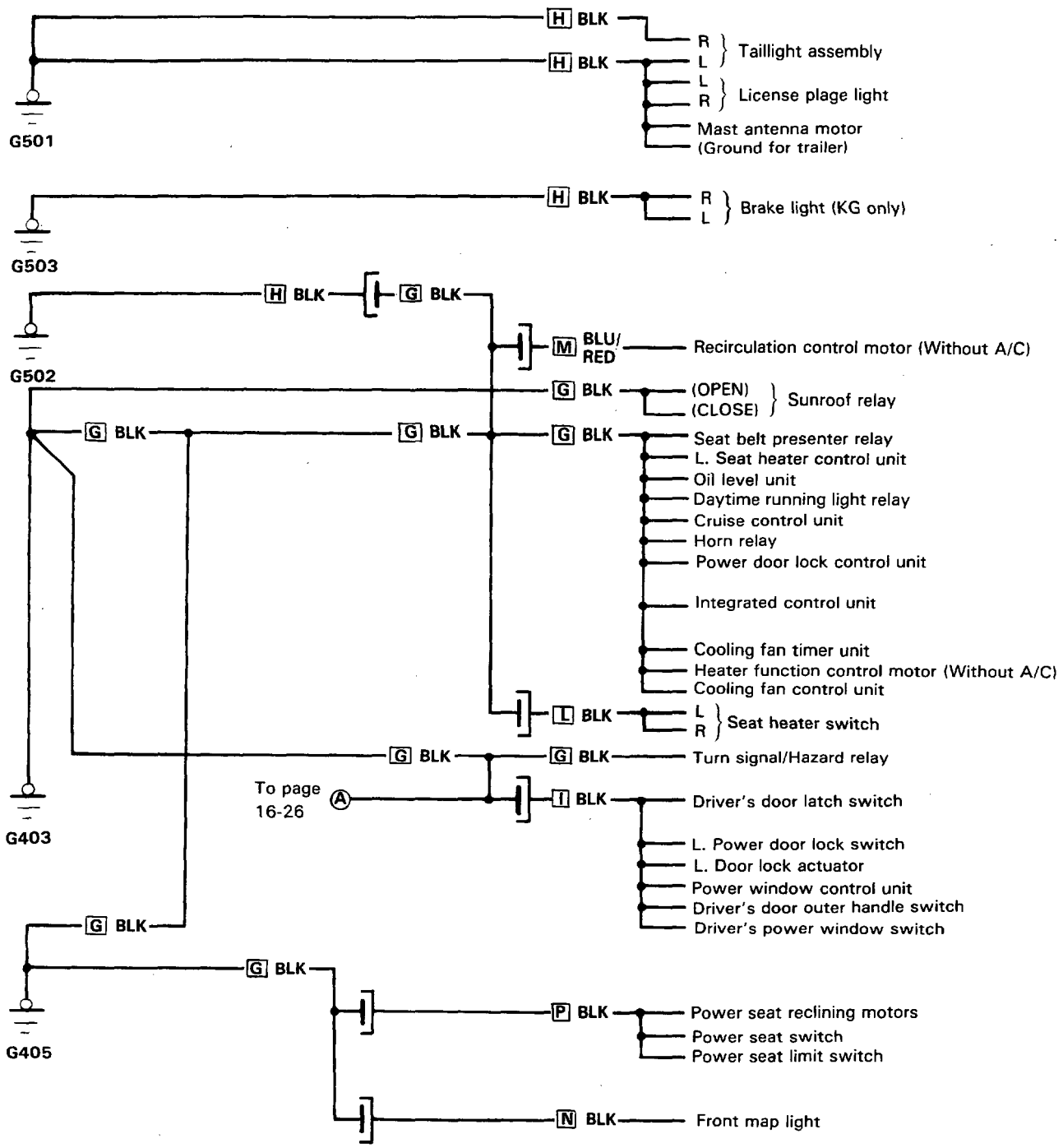

G: Left side wire harness
H: Rear wire harness
I: Driver's door wire harness
L: Console wires
M: Blower wire harness
N: Roof wires
P: Power seat wire harness

(RHD)

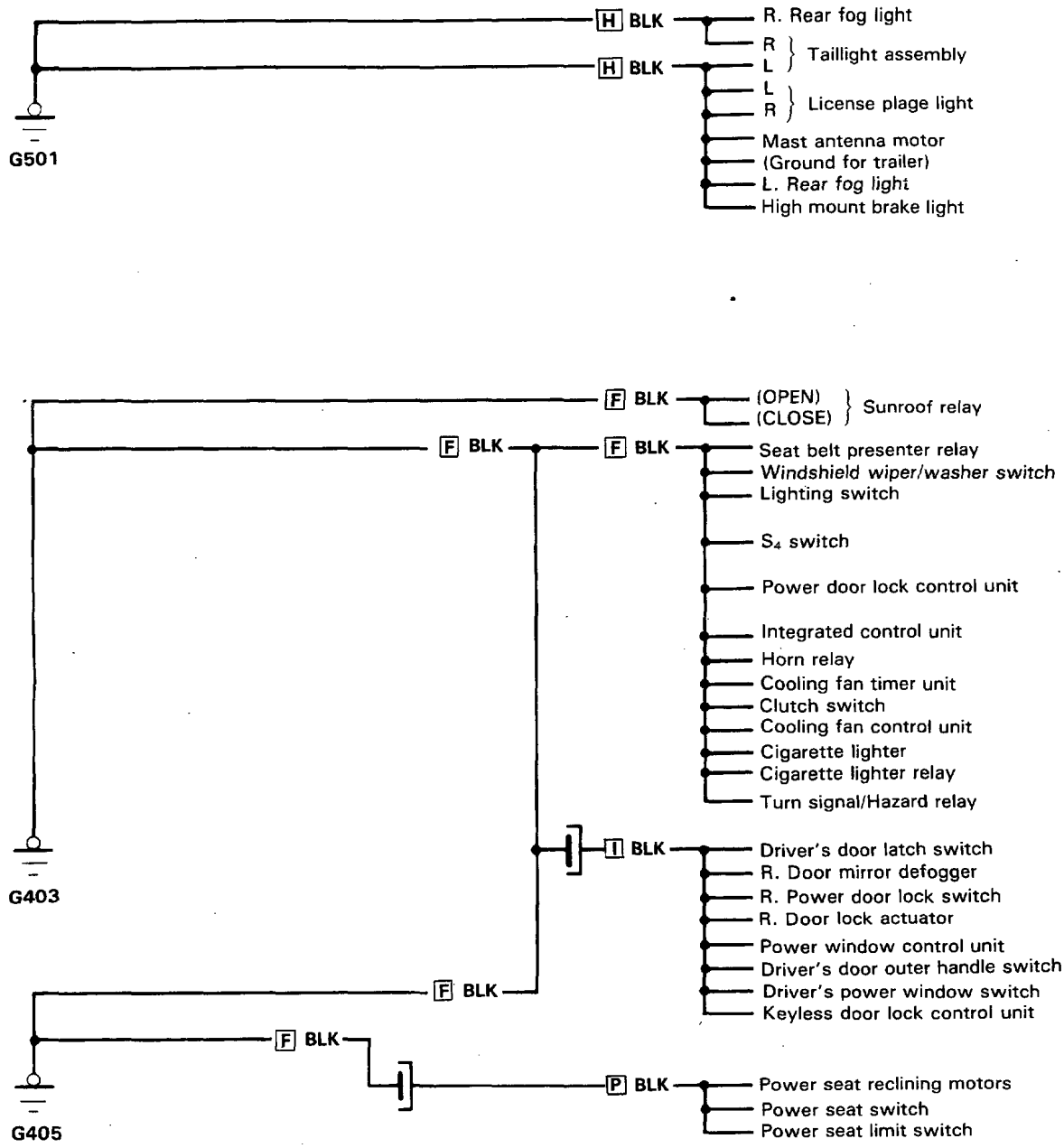

F: Right side wire harness
H: Rear wire harness
I: Driver's door wire harness
P: Power seat wire harness

(cont'd)

Ground Distribution

Circuit Identification (LHD)

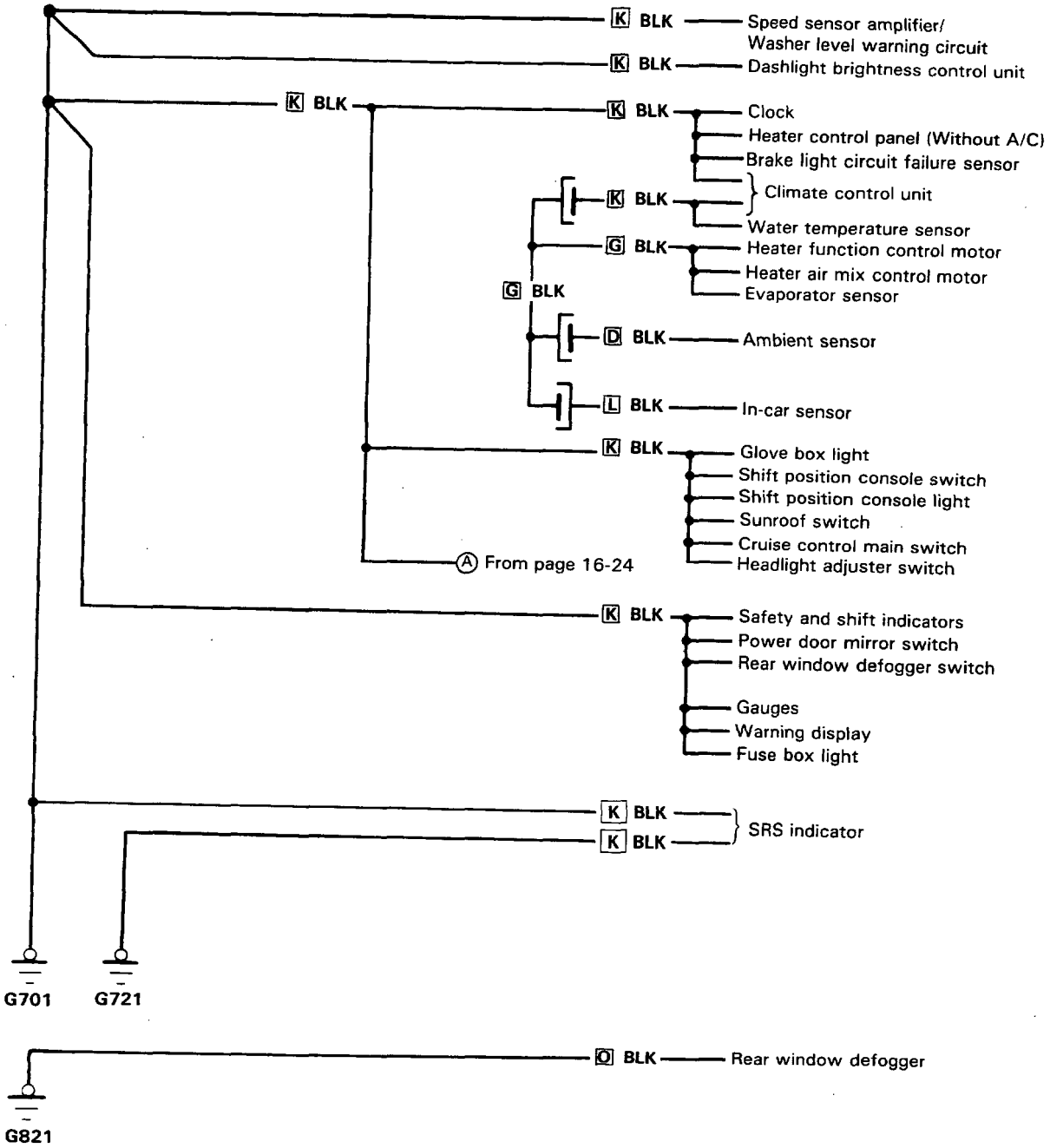

D: Engine compartment wire harness
G: Left side wire harness
K: Dashboard wire harness
L: Console wires
O: Defogger ground wire

(RHD)

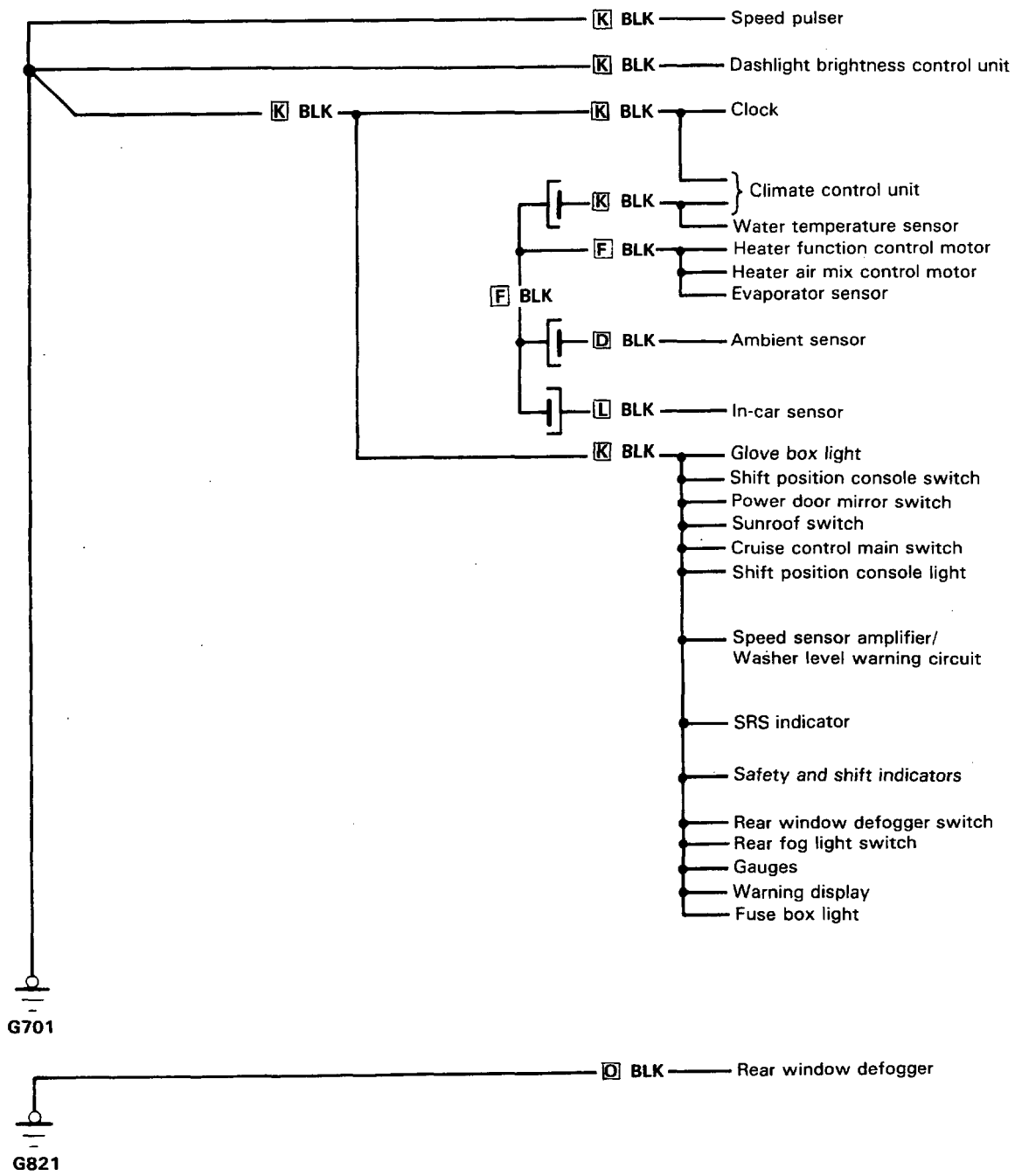

D: Engine compartment wire harness
F: Right side wire harness
K: Dashboard wire harness
L: Console wires
O: Defogger ground wire

Fuse Box/Fuse Holder

Removal/Installation

CAUTION:

- **Be sure to install the SRS wiring so that it is not pinched or interfering with other car parts.**
- **Always keep the short connector on the airbag connector when the harness is disconnected.**

Removal:

1. Disconnect both the negative cable and positive cable from the battery.

2. Remove the maintenance lid A below the airbag, then remove the short connector.

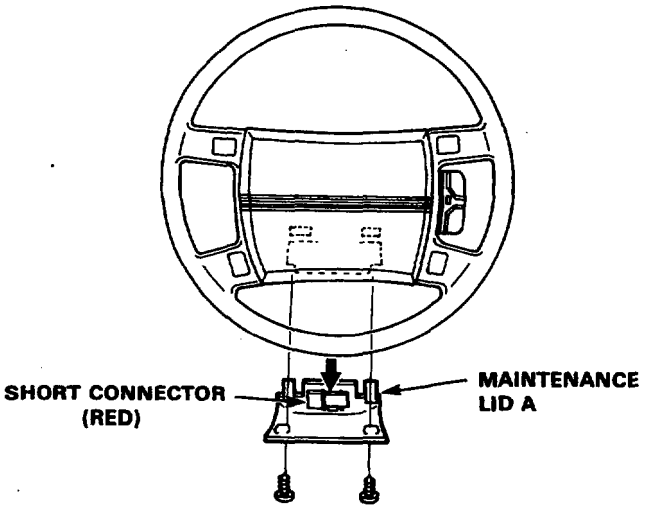

3. Disconnect the connector between the airbag and cable reel.

4. Connect the short connector to the airbag side of the connector.

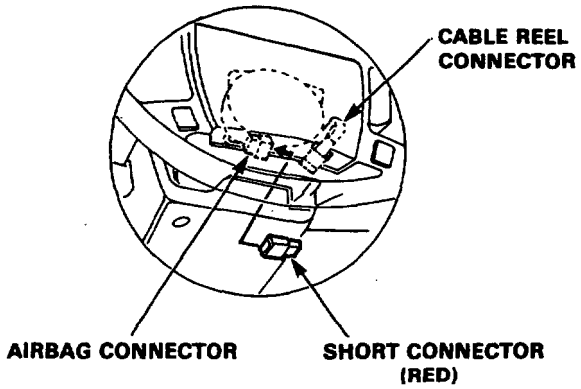

5. Remove the dashboard lower panel.

6. Remove the fuse box and fuse holder mounting bolt.

7. Disconnect the fuse box and fuse holder connectors.

   NOTE: The SRS main harness connector is double locked. To remove it, first lift the connector lid with a thin screwdriver, then press the connector tab down and pull the connector out.

8. Pull out the fuse box and fuse holder.

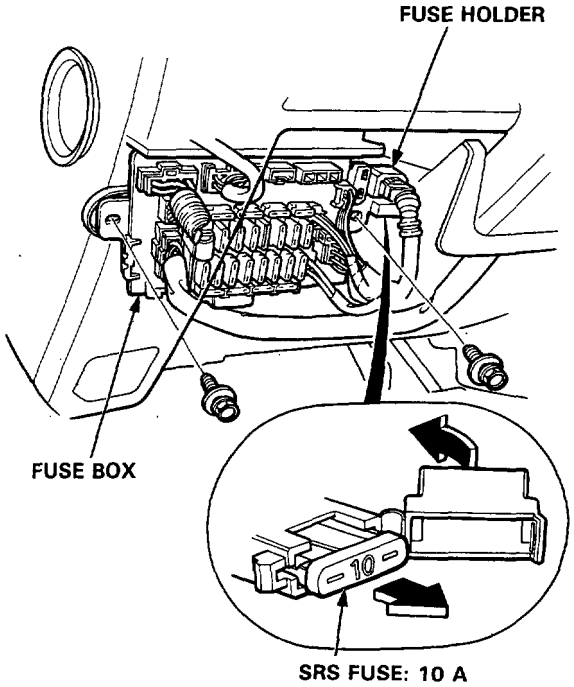

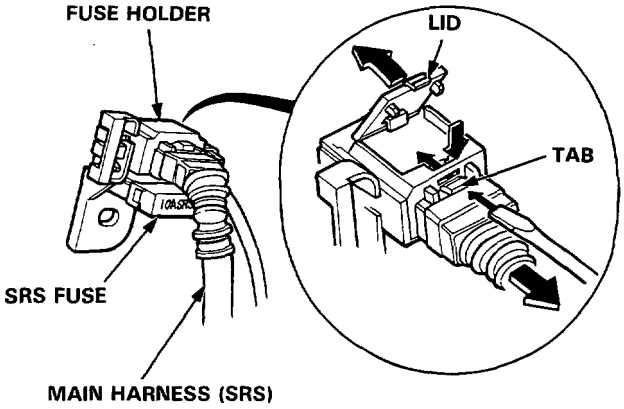

Installation:

1. *Install the fuse box and fuse holder.*

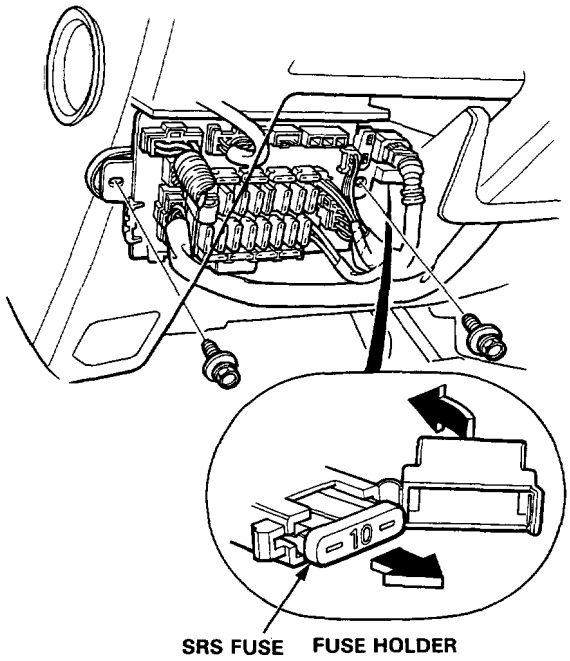

2. Connect the connectors to the fuse box and fuse holder.

   NOTE: To reinstall the SRS main harness connector, push it into position until it clicks, then close the connector lid.

3. Install the dashboard lower panel.

4. Disconnect the short connector from the airbag.

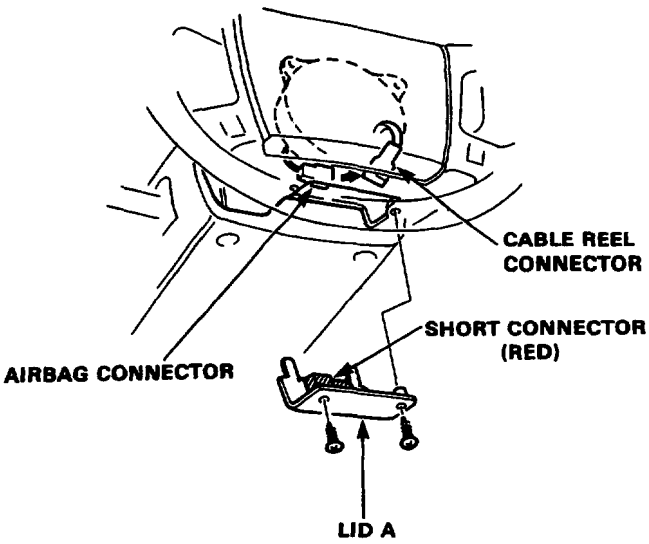

5. Connect the airbag 2-P connector and cable reel 2-P connector.

6. Attach the short connector to the lid A and attach to the steering wheel.

7. Connect both the negative cable and positive cable to the battery.

8. After installing the airbag assembly, confirm proper system operation:
   - Turn on the ignition to II; the instrument panel SRS light should go on for about 8 seconds and then go off.
   - Confirm operation of the lighting and wiper switches.
   - Confirm operation of the air conditioner, heater, radio/cassette player and brake lights.
   - Confirm operation of the cruise control set/resume switch.

Ignition Switch

Test

CAUTION:
- **Be sure to install the SRS wiring so that it is not pinched or interfering with other car parts.**
- **Always keep the short connector on the airbag connector when the harness is disconnected.**

1. Disconnect both the negative cable and positive cable from the battery.

2. Remove the maintenance lid A below the airbag, then remove the short connector.

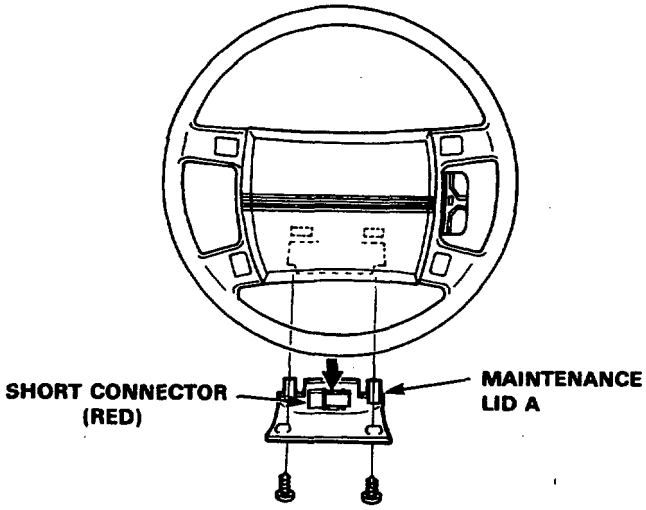

3. Disconnect the connector between the airbag and cable reel.

4. Connect the short connector to the airbag side of the connector.

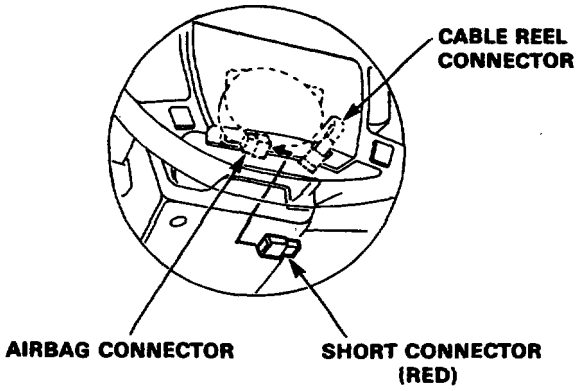

5. Remove the dashboard lower panel and disconnect the 7-P and 1-P connectors from the dash fuse box and the fuse holder.

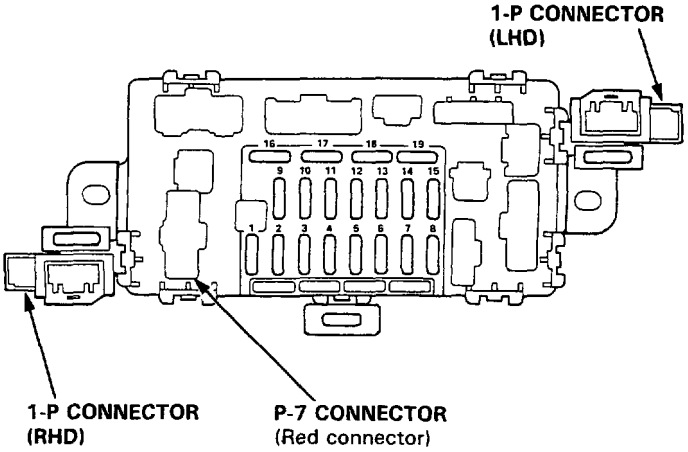

6. Check for continuity between the terminals in each switch position according to the table.

Terminal / Position	WHT/ RED (ACC)	WHT (BAT)	BLK/ YEL (IG1)	YEL (IG2)	BLK/ WHT (ST)
0 (LOCK)					
I (ACC)	○——	——○			
II (ON)	○——	——○	——○	——○	
III (ST)		○——	——○	——	——○

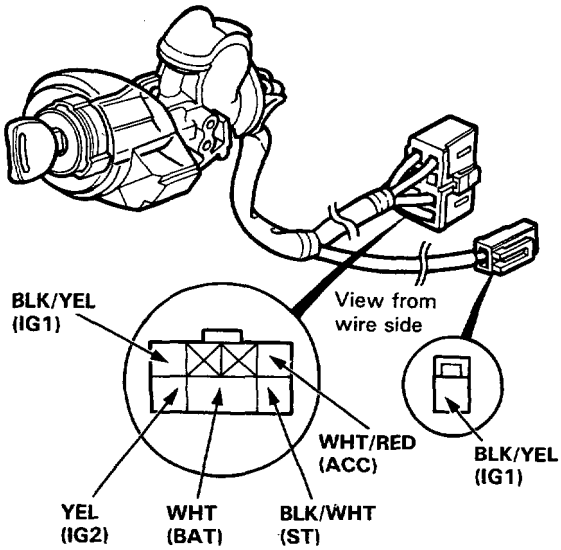

7. **Disconnect the short connector from the airbag.**

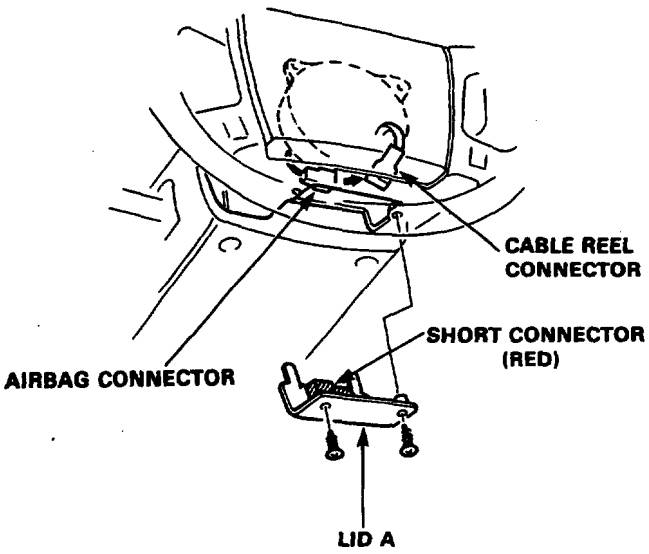

8. **Connect the airbag 2-P connector and cable reel 2-P connector.**

9. **Attach the short connector to the lid A and attach to the steering wheel.**

10. **Connect both the negative cable and positive cable to the battery.**

11. **After installing the airbag assembly, confirm proper system operation:**

    - Turn on the ignition to II; the instrument panel SRS light should go on for about 8 seconds and then go off.
    - Confirm operation of the lighting and wiper switches.
    - Confirm operation of the air conditioner, heater, radio/cassette player and brake lights.
    - Confirm operation of the cruise control set/resume switch.

Ignition Switch

Electrical Switch Replacement

CAUTION:
- **Be sure to install the SRS wiring so that it is not pinched or interfering with other car parts.**
- **Always keep the short connector on the airbag connector when the harness is disconnected.**

1. Disconnect both the negative cable and positive cable from the battery.

2. Remove the maintenance lid A below the airbag, then remove the short connector.

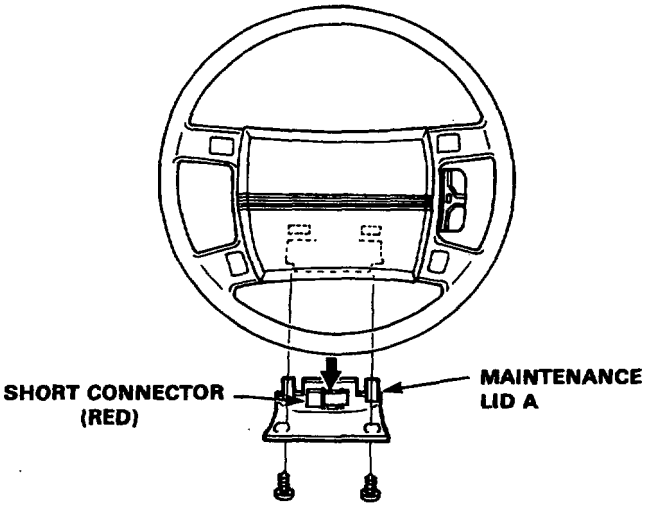

3. Disconnect the connector between the airbag and cable reel.

4. Connect the short connector to the airbag side of the connector.

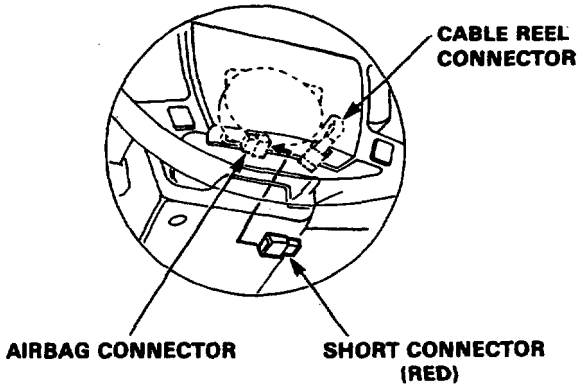

5. Remove the steering column lower cover.

6. Disconnect the 7-P connector from the dash fuse box and the 1-P connector from the fuse holder.

7. Insert the key ant turn it to "0 (LOCK)."

8. Remove the 2 screws and replace the base of the switch.

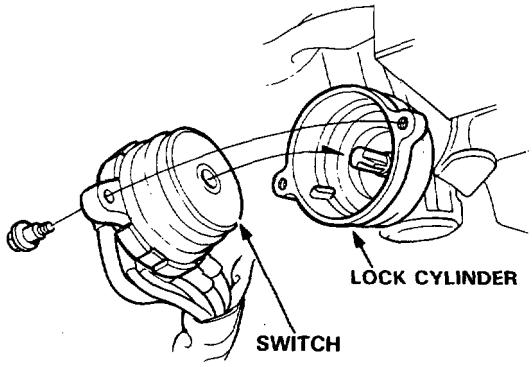

9. Switch installation in the reverse order of removal.

10. **Disconnect the short connector from the airbag.**

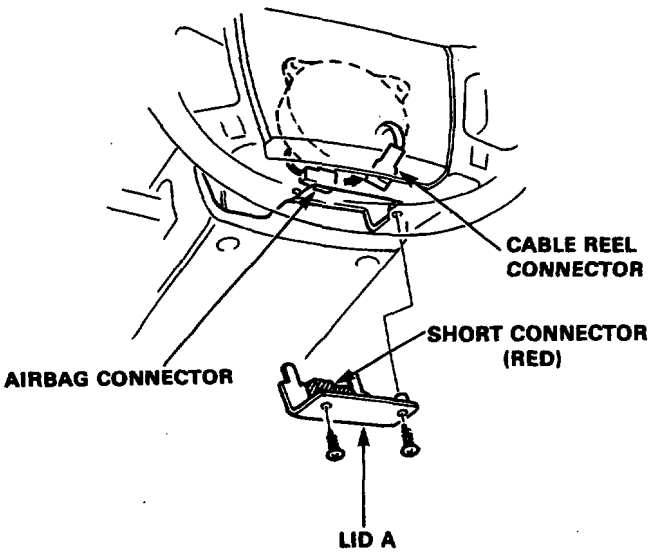

11. **Connect the airbag 2-P connector and cable reel 2-P connector.**

12. **Attach the short connector to the lid A and attach to the steering wheel.**

13. **Connect both the negative cable and positive cable to the battery.**

14. **After installing the airbag assembly, confirm proper system operation:**

    - Turn on the ignition to II; the instrument panel SRS light should go on for about 8 seconds and then go off.
    - Confirm operation of the lighting and wiper switches.
    - Confirm operation of the air conditioner, heater, radio/cassette player and brake lights.
    - Confirm operation of the cruise control set/resume switch.

Lock Cylinder Replacement

1. Remove the steering column covers.

2. Remove the bulb/socket from the key light case by turning the socket 45°, then remove the screw and the key light case from the lock body.

3. Turn the ignition key to "I (ACC)."

4. Push the pin in and remove the lock cylinder from the lock body.

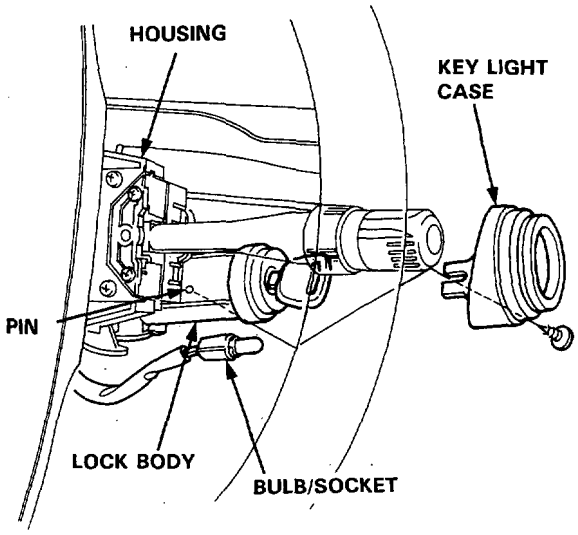

5. Turn the key to "0 (LOCK)" and align the lock cylinder with the lock body.

6. Turn the key almost to "I (ACC)" and insert the lock cylinder until the pin touches the body.

7. Turn the key to the "I (ACC)", push the pin and insert the lock cylinder into the lock body until the pin clicks into place.

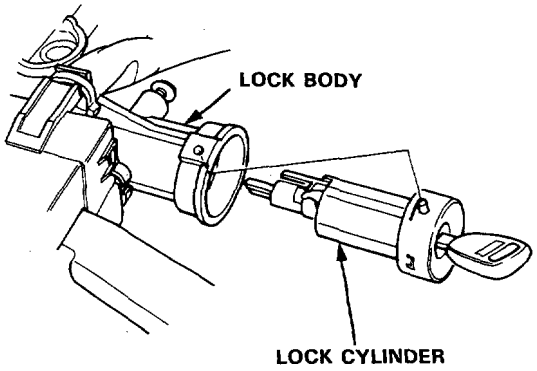

Ignition Switch

Steering Lock Replacement

SRS wire harness is routed near the steering lock assembly.

⚠WARNING All SRS wire harness and connectors are colored yellow. Do not electrical test equipment on these circuit.

CAUTION: Be careful not to damage SRS wire harness when servicing the steering lock.

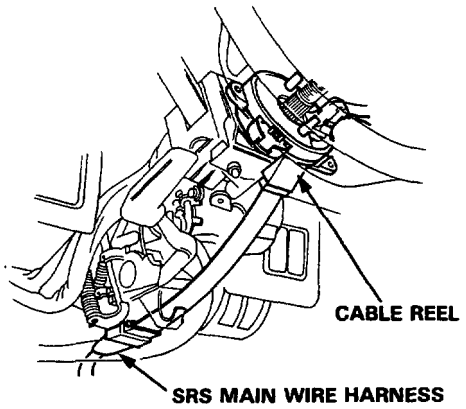

1. Remove the steering column covers.
2. Center punch each of the 2 shear bolts and drill their heads off with a 3/16 in. drill bit.

   CAUTION: Do not damage the switch body when removing the shear bolt heads.
3. Remove the shear bolts from the switch body.

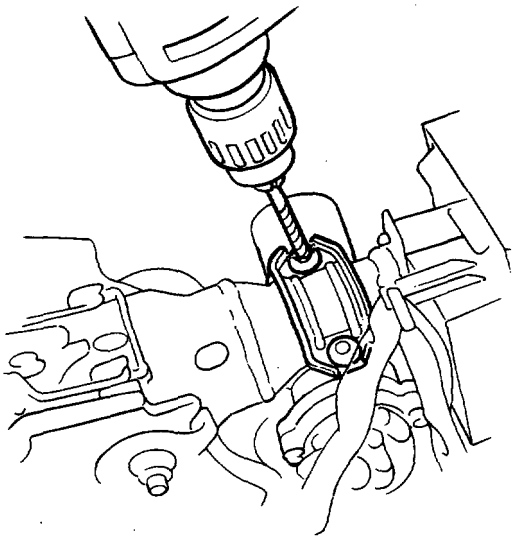

4. Install the new ignition switch without the key inserted.
5. Loosely tighten the new shear bolts.

   NOTE: Make sure the projection on the ignition switch is aligned with the hole in the steering column.
6. Insert the ignition key and check for proper operation of the steering wheel lock and that the ignition key turns freely.
7. Tighten the shear bolts until the hex heads twist off.

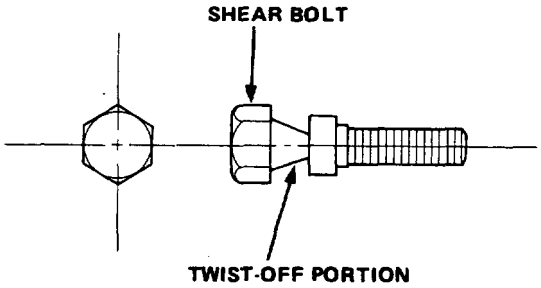

Component Location Index

- **IGNITION TIMING CONTROL SYSTEM**
  Inspection and Setting, page 16-37

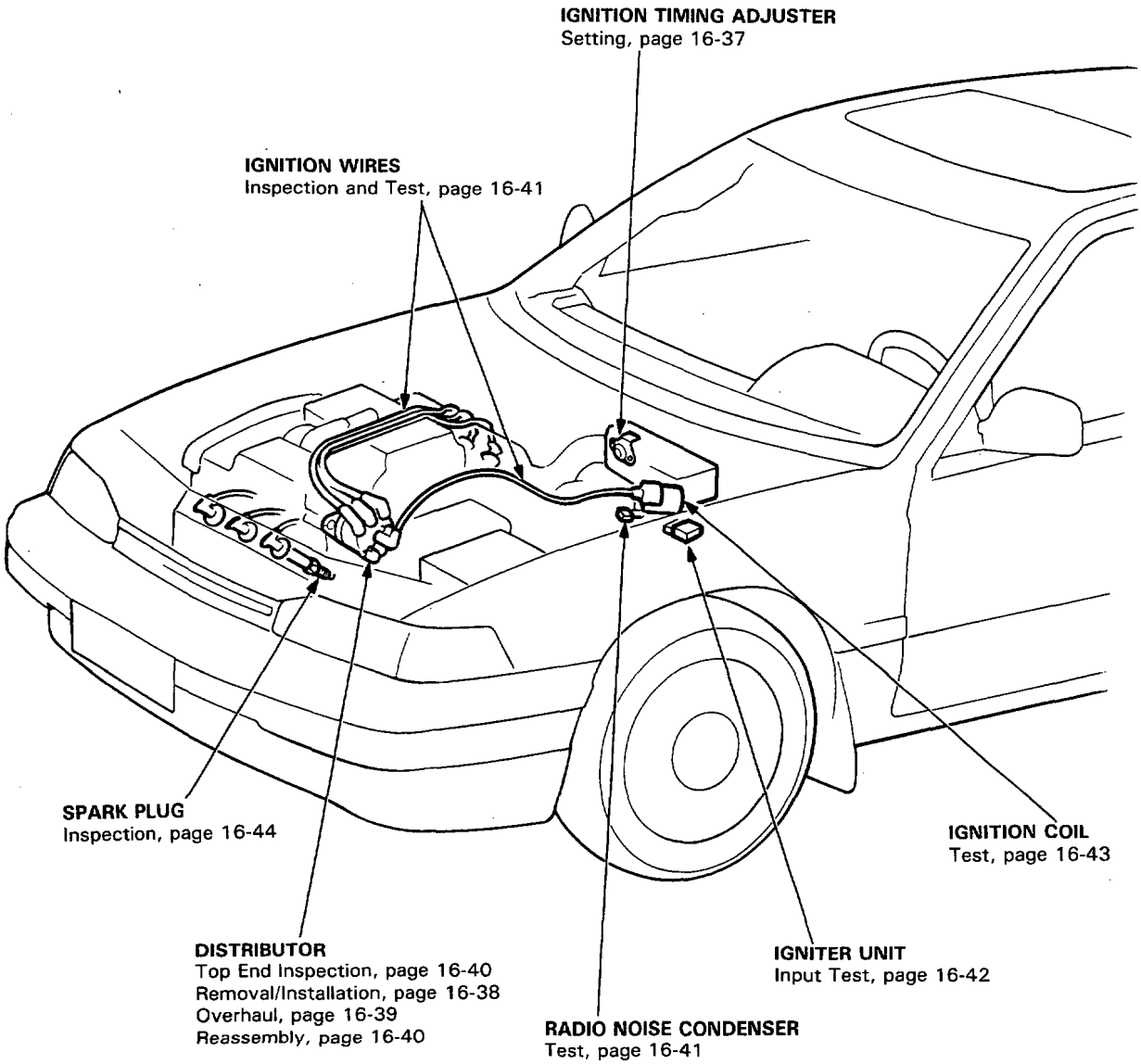

Ignition System

Circuit Diagram

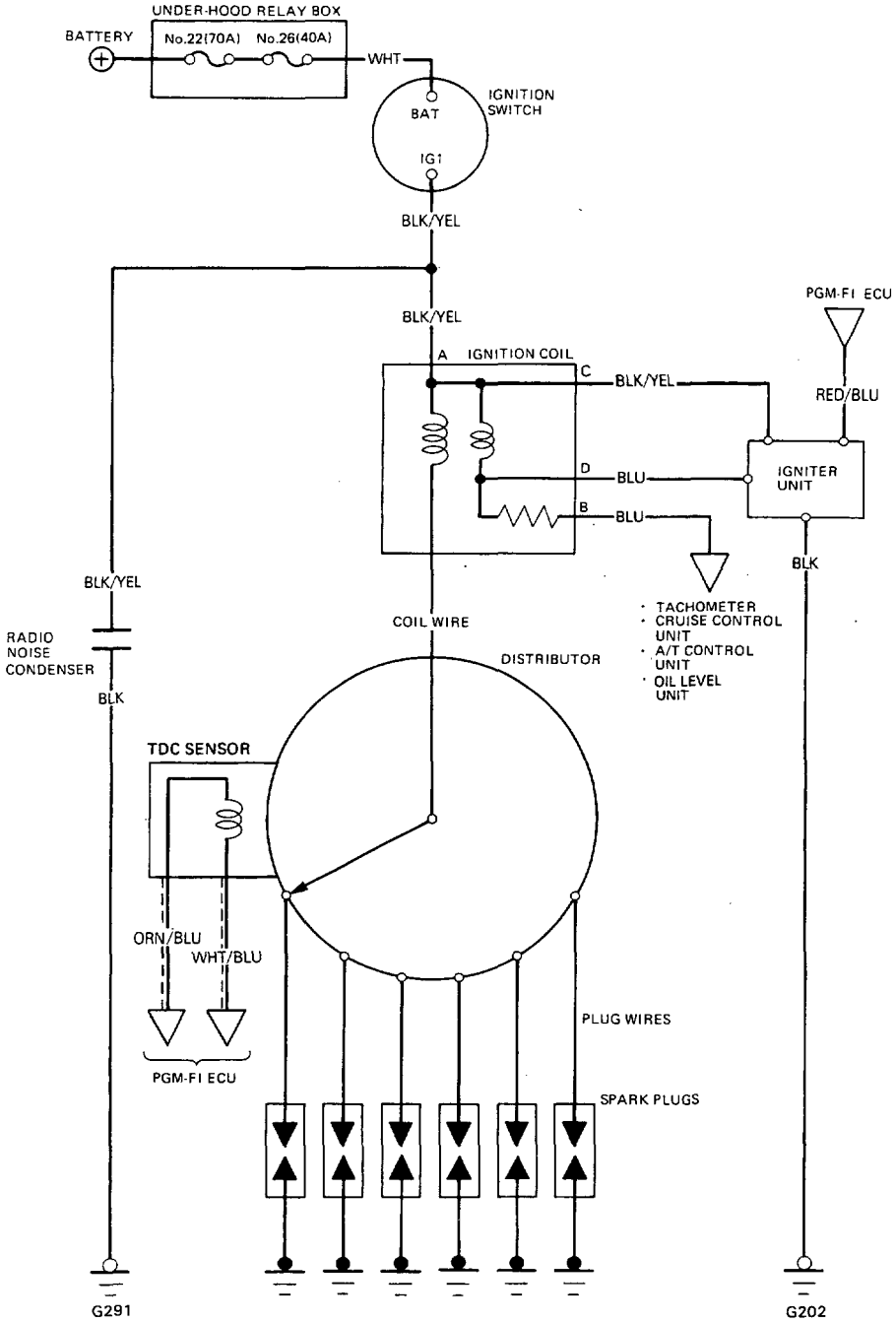

Ignition Timing Inspection and Setting

1. Start the engine and allow it to warm up (cooling fan comes on).

2. Connect a timing light to the engine; while the engine idles, point the light toward the pointer on the timing belt cover.

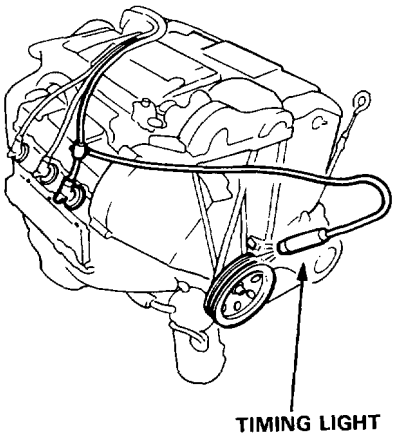

3. Inspect ignition timing at idle.

   Ignition Timing:
   15 ± 2° BTDC (RED)
   KF, KB, KE, KQ: at 720 ± 50 min⁻¹ (rpm) in neutral
   KG, KX: at 680 ± 50 min⁻¹ (rpm) in neutral

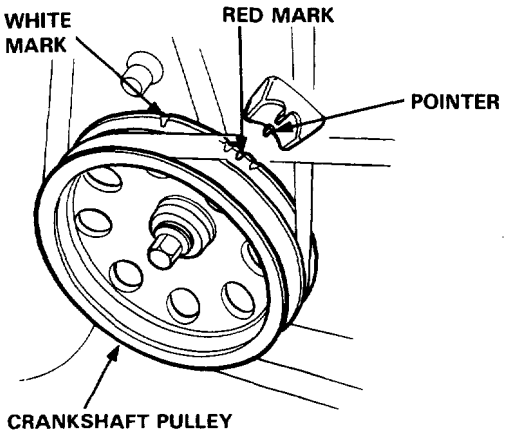

4. Adjust ignition timing, if necessary, by turning the adjusting screw on the ignition timing adjuster in the control box.

5. Remove the control box upper and lower covers.

   NOTE: LHD shown, RHD similar.

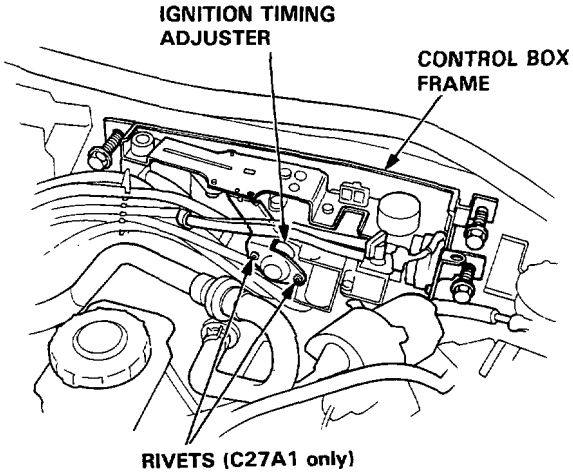

6. For C27A1 engine only, drill the 2 rivets off with a 3/16 in. drill bit, then separate the stay cover from the adjuster.

   CAUTION: Do not damage the adjuster when removing the rivets.

7. Adjust as necessary by turning the adjusting screw on the adjuster; turn the adjusting screw counterclockwise to retard the timing, or clockwise to advance the timing.

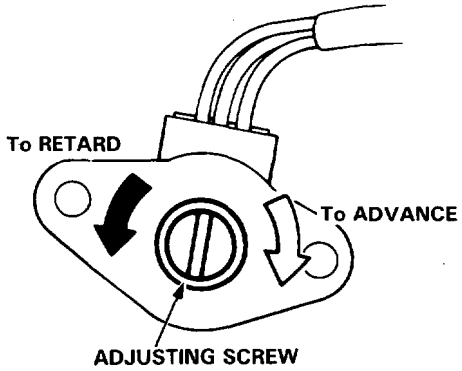

8. After adjusting, reinstall the stay cover to the ignition timing adjuster with new rivets, then reinstall the adjuster to the control box.

Distributor Removal/Installation

Removal

1. Remove the engine wire harness and connectors from the distributor.

2. Disconnect the spark plug wires and coil wire from the distributor cap.

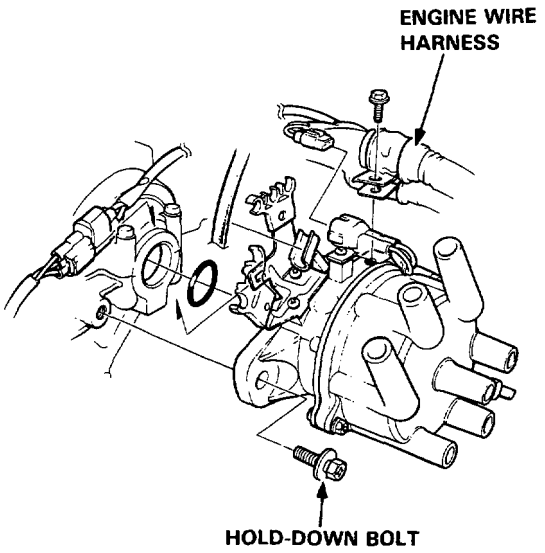

3. Remove the distributor hold-down bolt, then remove the distributor from the cylinder head.

Installation

1. Coat a new O-ring with engine oil then install it.

2. Slip the distributor into position.

   NOTE: The lugs on the end of the distributor and its mating grooves in the camshaft end are both offset to eliminate the possibility of installing the distributor 180° out of time.

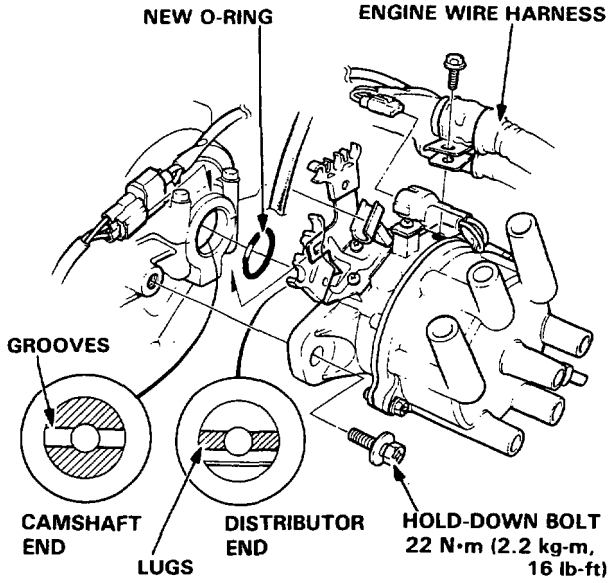

3. Install the hold-down bolt and tighten.

4. Connect the engine wire harness and connector to the distributor.

5. Connect the coil wire and the spark plug wires as shown.

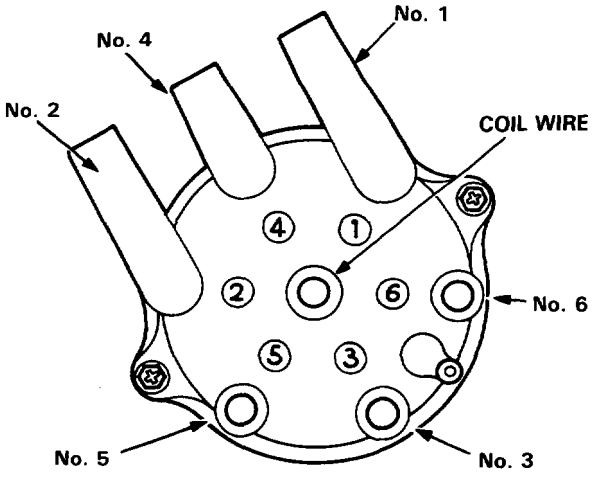

Distributor Overhaul

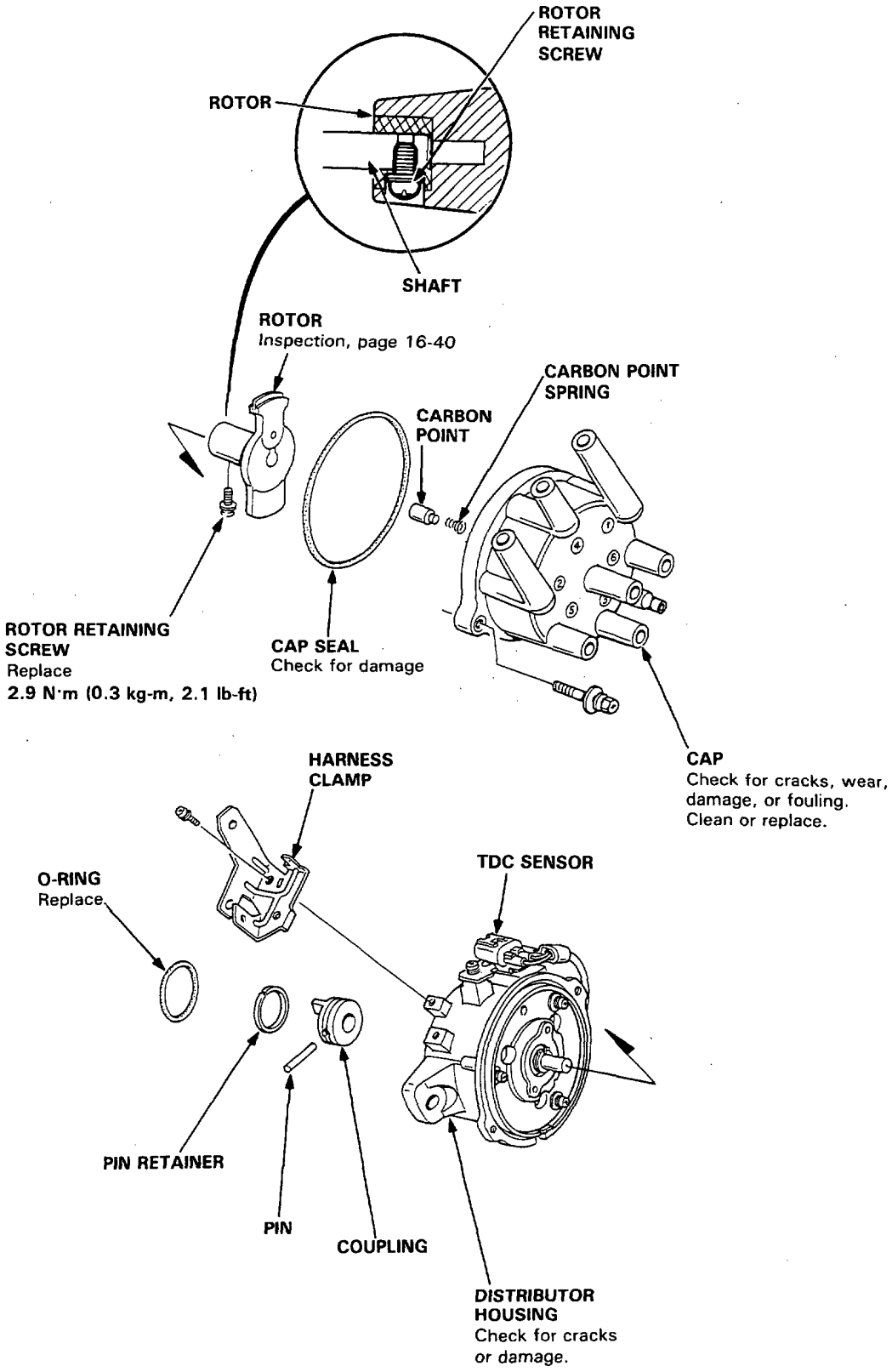

Distributor Top End Inspection

1. Check for rough or pitted rotor and cap terminals.
2. Scrape or file off the carbon deposits.
   Smooth the rotor terminal with an oil stone or #600 sandpaper if rough.
3. Check the distributor cap for cracks, wear and damages. If necessary, clean or replace it.

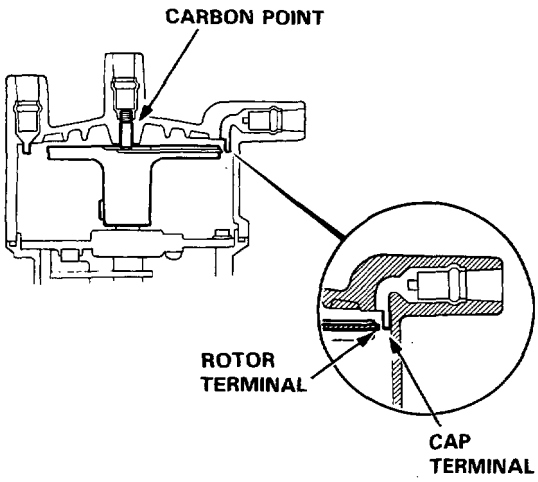

Distributor Reassembly

Reassembly the distributor in the reverse order of disassembly.

1. Install the rotor, then turn it so that it faces in the direction shown (toward the No.1 cylinder).

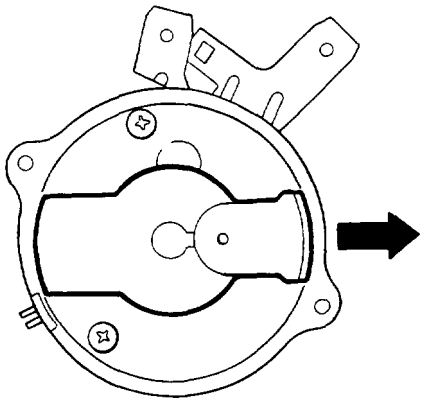

2. Set the thrust washer and coupling on the shaft.
3. Check that the rotor is still pointing toward the No.1 cylinder, then align the index mark on the housing with the index mark on the coupling.

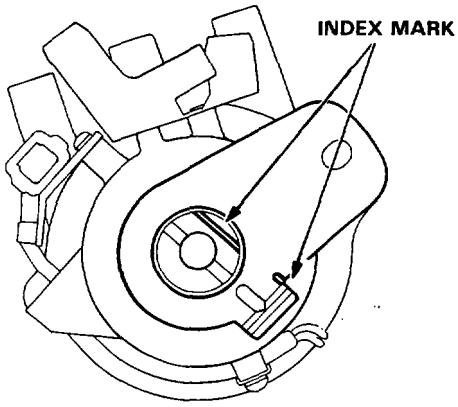

4. Drive in the pin and secure it with the pin retainer.

Radio Condenser Capacity Test

1. Use a commercially available condenser tester. Connect the tester probes and measure the condenser capacity.

   Condenser Capacity: 0.47 ± 0.09 microfarads (μF)

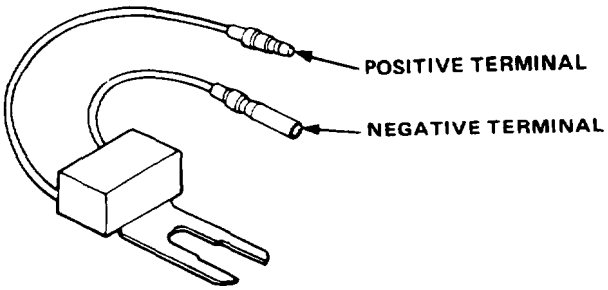

   NOTE: The radio condenser is intended to reduce ignition noise; however, condenser failure may cause the engine to stop running.

2. If not within the specifications, replace the radio condenser.

Ignition Wire Inspection and Test

CAUTION: Carefully remove the ignition wires by pulling on the rubber boots. Do not bend the wire or the conductor may be broken.

1. Check the condition of the wire terminals. If any terminal is corroded, clean it, and if it is broken or distorted, replace the wire.

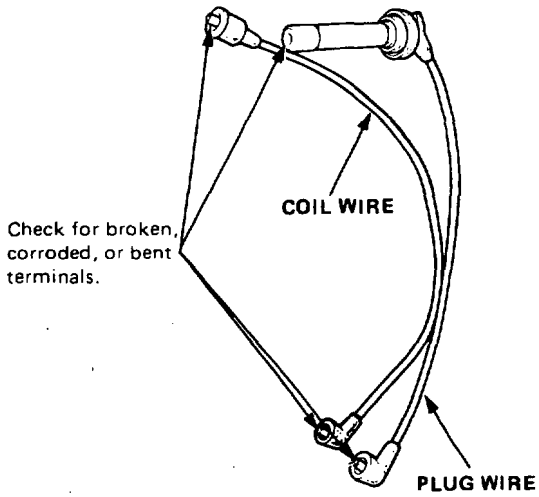

2. Connect ohmmeter probes and measure resistance.

   Ignition Wire Resistance:
   25,000 ohms max. at 20°C (70°F)

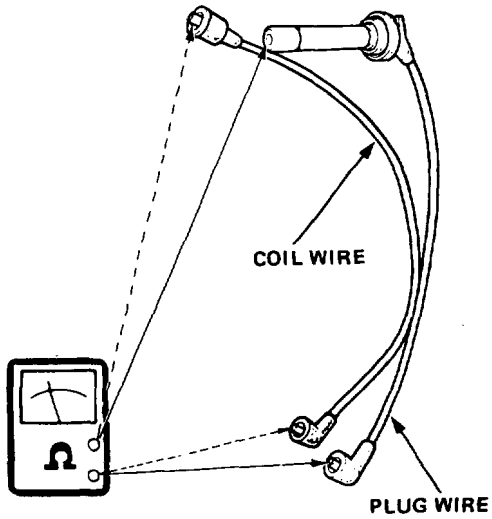

3. If resistance exceeds 25,000 ohms, replace the ignition wire.

Igniter Unit Input Test

NOTE:
- See section 6 when the self-diagnostic indicator blinks.
- Perform an input test for the igniter unit after finishing the fundamental tests for the ignition system and fuel emission system.
- The tachometer should operate normally.

1. Disconnect the 4-P connector from the igniter unit.

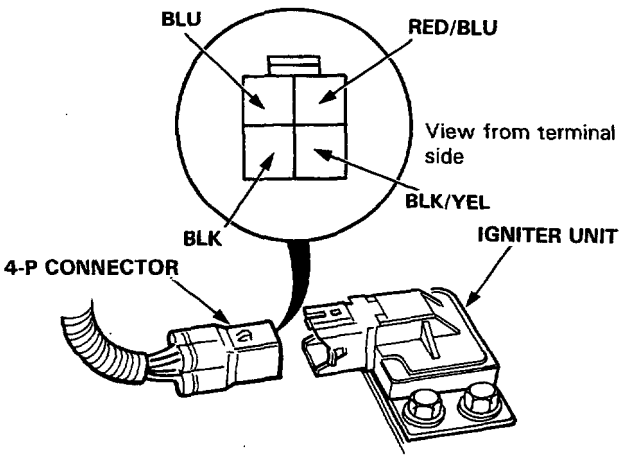

2. Turn the ignition switch ON. Check for voltage between the BLK/YEL wire and body ground.
   There should be battery voltage.
   - If there is no voltage, check the BLK/YEL wire between the ignition switch, ignition coil and igniter unit.
   - If there is voltage, go to step 3.

3. Turn the ignition switch ON. Check for voltage between the BLU wire and body ground.
   There should be battery voltage.
   - If there is no voltage, check for:
     - BLU wire between the ignition switch, ignition coil and igniter unit.
     - Ignition coil
   - If there is voltage, go to step 4.

4. Check the RED/BLU wire between the PGM-FI ECU and igniter unit.

5. If all tests are normal, replace the igniter unit.

Ignition Coil Test

1. With the ignition switch OFF, disconnect the primary connector(s) and the coil wire.

2. Using an ohmmeter, measure resistance between the terminals. Replace the coil if the resistance is not within specifications.

   NOTE: Resistance will vary with the coil temperature; specifications are at 20°C (68°F).

M/T:

Primary Winding Resistance
(between the A and D terminals):
0.3–0.4 ohms
Secondary Winding Resistance
(between the A and secondary winding terminals):
9,040–13,560 ohms
Resistance between the B and D terminals:
2,090–2,310 ohms

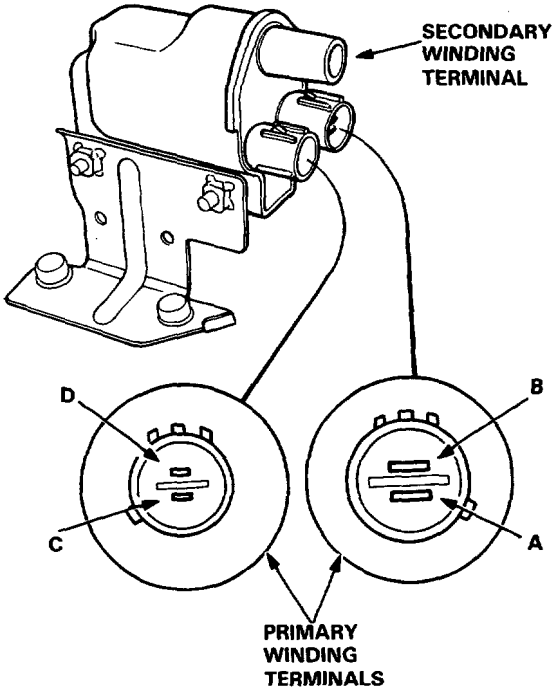

A/T:

Primary Winding Resistance
(between the A and D terminals):
0.3–0.4 ohms
Secondary Winding Resistance
(between the A and secondary winding terminals):
14,400–21,600 ohms
Resistance between the B and D terminals:
2,090–2,310 ohms

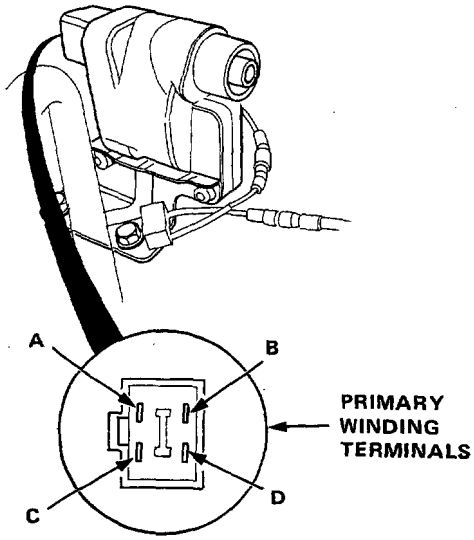

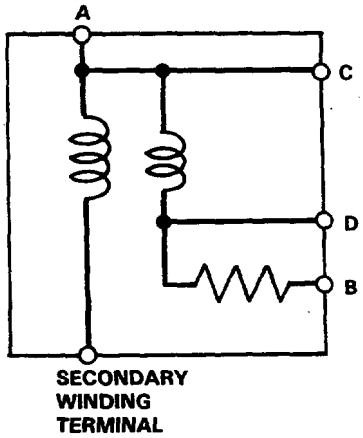

3. Check for continuity between the A and C terminals.
   Replace the coil if there is no continuity.

Spark Plug Inspection

1. Inspect the electrodes and ceramic insulator for:

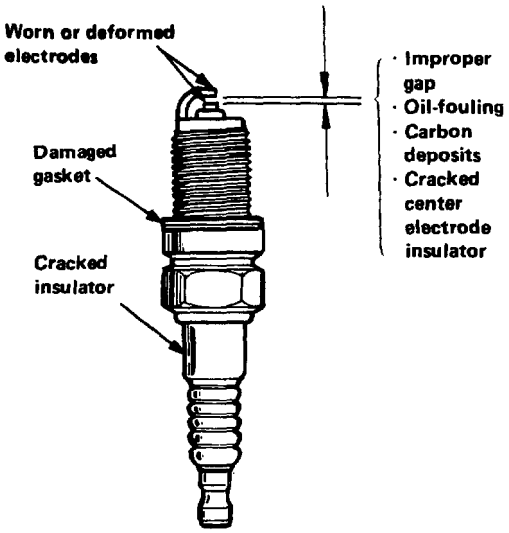

Burned or worn electrodes may be caused by:
- Advanced ignition timing
- Loose spark plug
- Plug heat range too high
- Insufficient cooling

Fouled plug may be caused by:
- Retarded ignition timing
- Oil in combustion chamber
- Incorrect spark plug gap
- Plug heat range too low
- Excessive idling/low speed running
- Clogged air cleaner element
- Deteriorated ignition coil or ignition wires

2. Replace the plug if the center electrode is rounded as shown below:

Spark Plug:

		Standard	Optional
KQ model	NGK	BCPR6E-11	BCPR5E-11 BCPR5EY-N11 BCPR6EY-N11 BCPR7E-11 BCPR7EY-N11
	ND	Q20PR-U11	Q16PR-U11 Q22PR-U11
Except KQ model	NGK	BCPR6E-11	BCPR6EY-N11* BCPR7E-11 BCPR7EY-N11*
	ND	Q20PR-U11	Q22PR-U11

*: Except KE and KY models

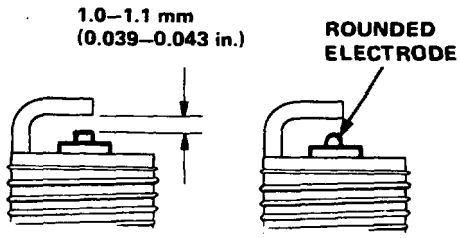

3. Adjust the gap with a suitable gapping tool.

   Electrode Gap: 1.0–1.1 mm (0.039–0.043 in.)

4. Screw the plugs into the cylinder head finger tight, then torque them to 18 N·m (1.8 kg-m, 13 lb-ft).

   NOTE: Apply a small quantity of anti-seize compound to the plug threads before installing.

Cooling Fan Control

Component Location Index

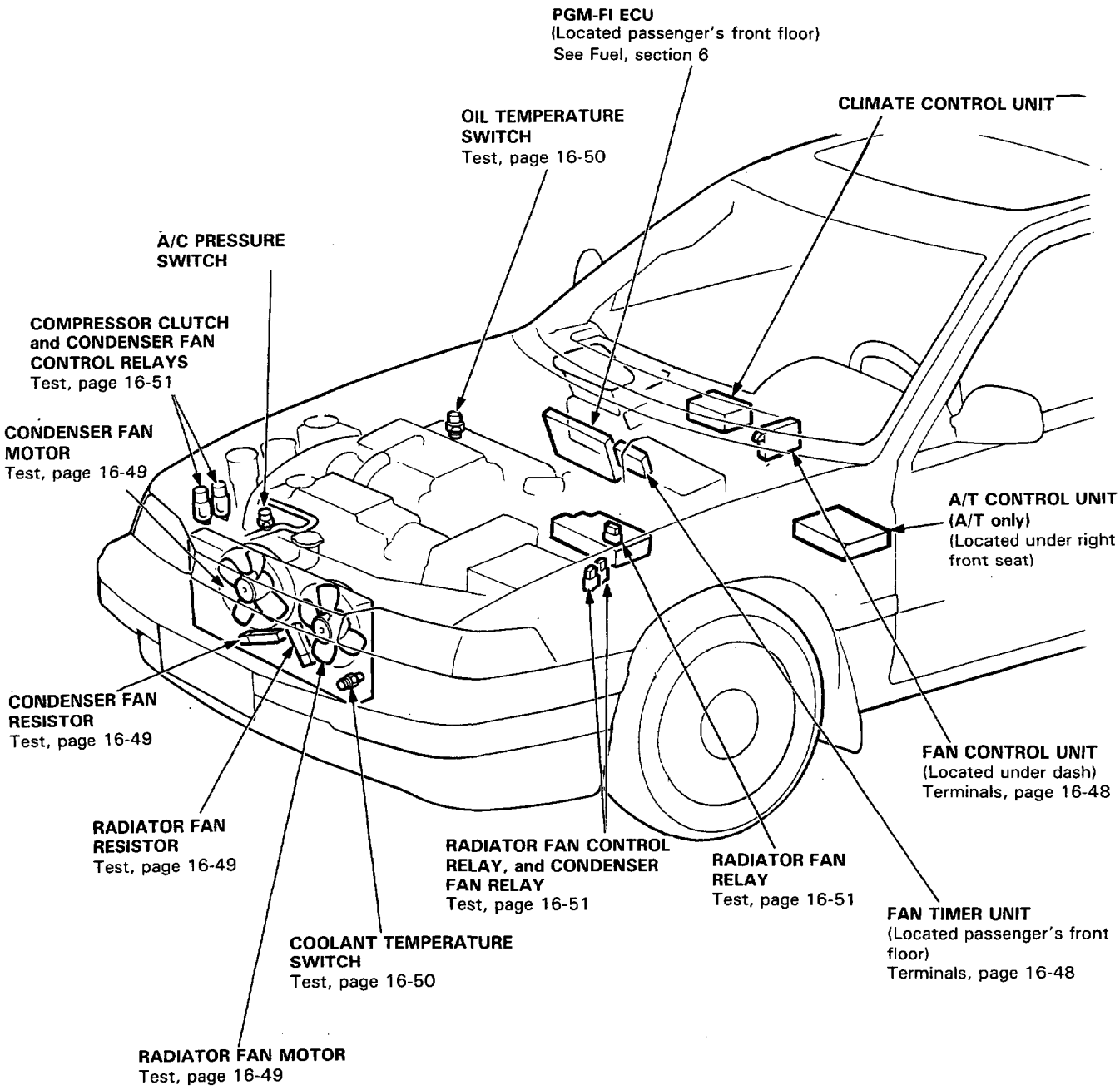

Cooling Fan Control

Circuit Diagram

NOTE: Several different wires have the same color. They have been given a number suffix to distinguish them (for example BLU/RED[1] and BLU/RED[2] are not the same).

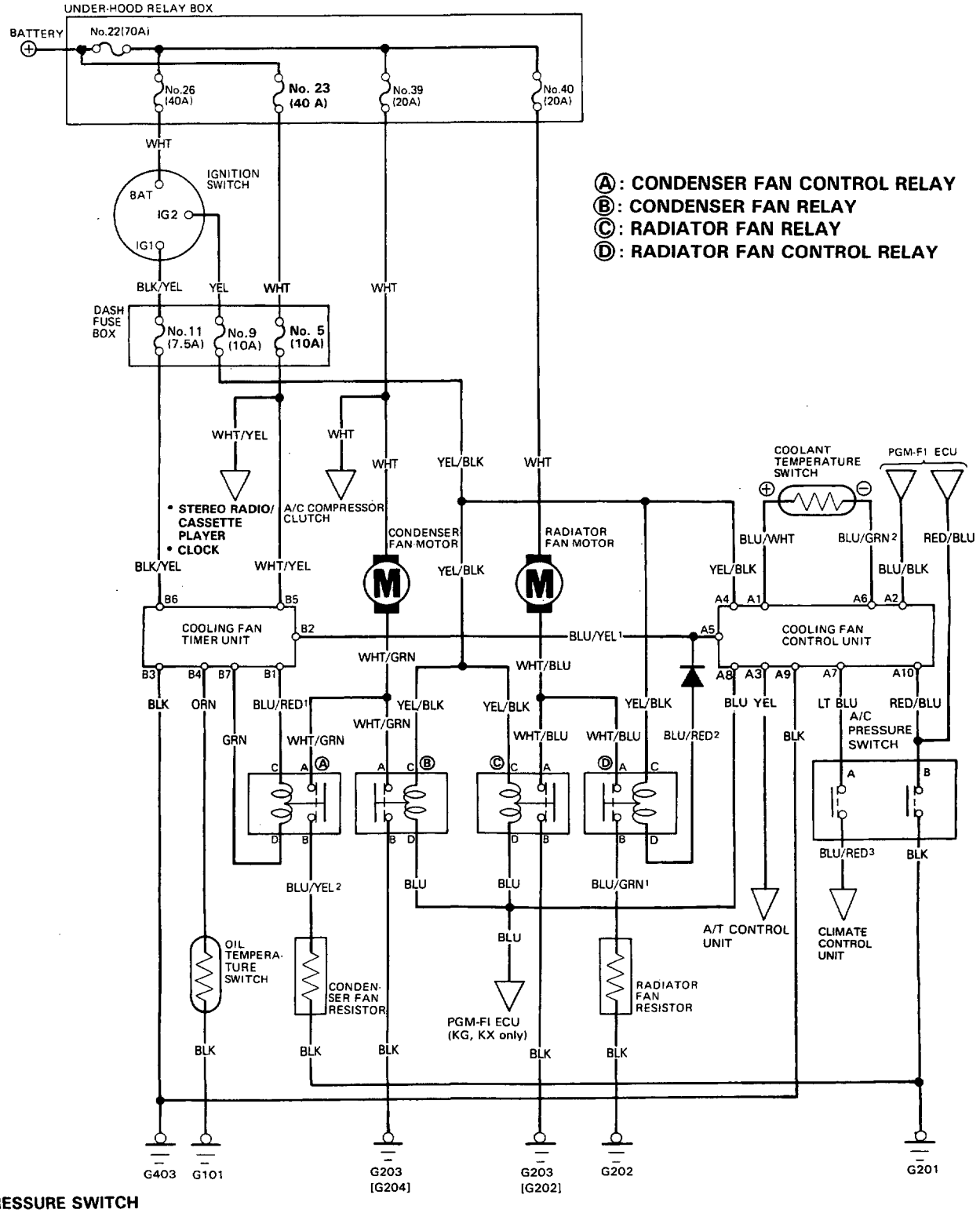

A/C PRESSURE SWITCH

A: ON between 210 kPa (2.1 kg/cm², 30 psi) and 2700 kPa (27 kg/cm², 384 psi)

B: ON below 1350 kPa (13.5 kg/cm², 192 psi)

[ ]: RHD

Troubleshooting

NOTE: The numbers in the table show the troubleshooting sequence.

Symptom \ Item to be inspected		Blown No. 39 (20 A) or No. 40 (20 A) fuse (in the under-hood relay box)	Radiator fan or condenser fan motor	Blown No. 9 (10A) fuse (in the dash fuse box)	Coolant temperature switch	Faulty fan control unit	Blown No. 23 (40 A) (in the under-hood relay box)	Resistor	Relay	Faulty fan timer unit	A/C and PGM-FI systems	Blown No. 11 (7.5 A) or No. 5 (10 A) fuse (in the dash fuse box)	Faulty A/C pressure switch or oil temperature switch	Poor ground	Open circuit in wires or loose or disconnected terminals
Only one fan operates (with engine and A/C ON).		1	2												WHT, WHT/GRN or WHT/BLU
Fans do not rotate.	Under all conditions.			1	2	3								G403	BLU/WHT, BLU/GRN[2] or YEL/BLK
	At low speed.					5	3	4	1	6		2		G201,G202 or G403	BLU/YEL[1], BLU/YEL[2], BLU/RED[1], BLU/RED[2], YEL/BLK, WHT/YEL BLU/GRN[1] or GRN
	At high speed.				2	3			1					G203 [G202 or 204]	YEL/BLK or BLU
Compressor clutch does not engage as necessary.					2	3					1				LT BLU, BLU/RED[3] or BLU/BLK
Fan timer unit fails to function properly.							2			4		1	3	G101 or G201	ORN or RED/BLU

[ ]: RHD

Cooling Fan Control

Control Unit Terminals

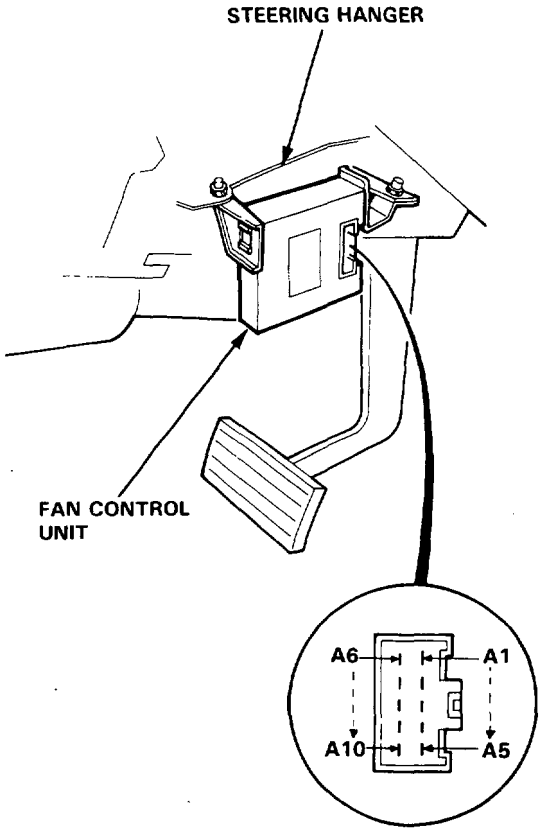

Terminal	Wire	Destination
A1	BLU/WHT	Coolant temperature switch ⊕
A2	BLU/BLK	A/C cut signal (To PGM-FI ECU)
A3	YEL	Lock-up control signal (To A/T control unit)
A4	YEL/BLK	IG2 (Main power supply)
A5	BLU/YEL	Condenser [and radiator] fan control relays ⊖
A6	BLU/GRN	Coolant temperature switch ⊖
A7	LT BLU	A/C pressure switch A
A8	BLU	Radiator and condenser fan relays ⊖
A9	BLK	Ground
A10	RED/BLU	A/C pressure switch B

Timer Unit Terminals

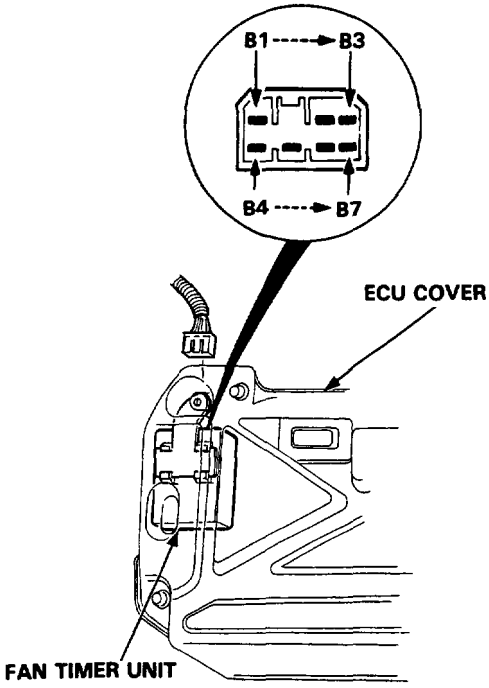

Terminal	Wire	Destination
B1	BLU/RED	Condenser fan timer relay ⊕
B2	BLU/YEL	Power supply (For condenser fan control relay with ignition switch ON)
B3	BLK	Ground
B4	ORN	Oil temperature switch
B5	WHT/YEL	Power supply (For condenser fan control relay with ignition switch OFF)
B6	BLK/YEL	IG1 (Timer reset signal)
B7	GRN	Condenser fan control relay ⊖

Fan Motor Test

1. Disconnect the 2-P connector from the fan motor.
2. Test motor operation by connecting battery positive to the A terminal, and negative to the B terminal.
3. If the motor fails to run smoothly, replace it.

Radiator Fan Motor:

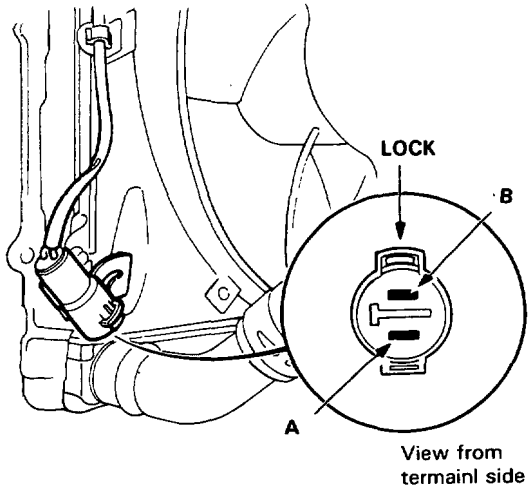

Condenser Fan Motor:

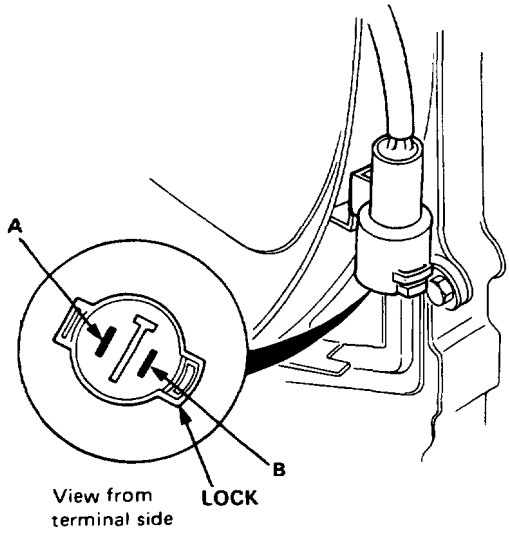

Resistor Test

1. Disconnect the 2-P connector from the resistor.
2. Using an ohmmeter, measure resistance between the A and B terminals. Replace the resistor if the resistance is not within specifications.

   NOTE: Resistance will vary with the resistor temperature; specifications are at 20°C (70°F).

Radiator Fan Resistor

Resistance: 0.9—1.1 ohms

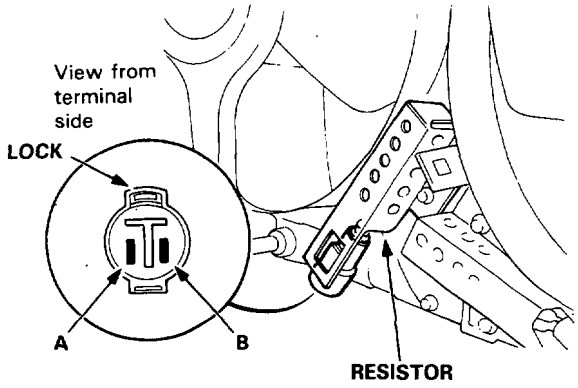

Condenser Fan Resistor

Resistance: 0.5—0.7 ohms

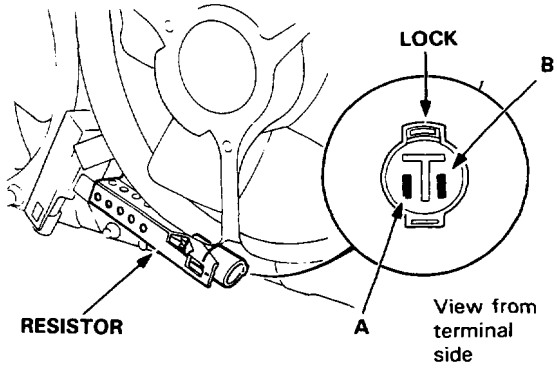

Cooling Fan Control

Coolant Temperature Switch Test

1. Remove the coolant temperature switch from the radiator.
2. Suspend the coolant temperature switch in a container of coolant as shown.

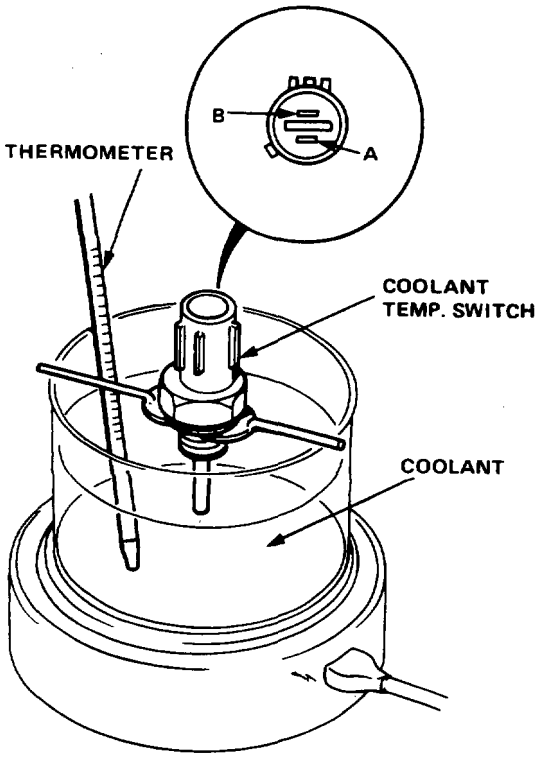

3. Heat the coolant and check coolant temperature with a thermometer (see table below).
4. Measure the resistance between the A and B terminals according to the table.

Temperature	84°C (183°F)	90°C (194°F)	108°C (226°F)	110°C (230°F)
Resistance (kΩ)	1.047–1.255	0.872–1.024	0.518–0.574	0.489–0.541

5. If unable to obtain the above readings, replace the temperature switch.

Oil Temperature Switch Test

1. Remove the oil temperature switch from the cylinder head.
2. Suspend the oil temperature switch in a container of coolant as shown.

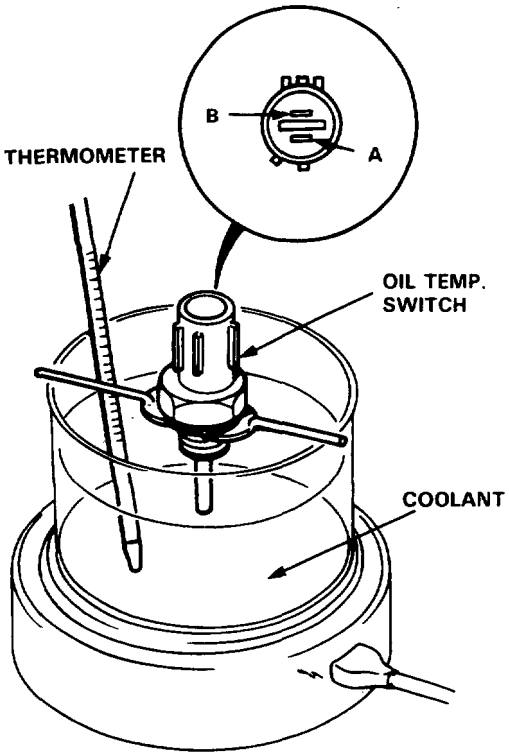

3. Heat the coolant and check coolant temperature with a thermometer (see table below).
4. Check for continuity between the A and B terminals according to the table.

Temperature \ Terminal		A	B
Above	101–109°C (214–228°F)	O———	———O
Below	80.5–95.5°C (177–204°F)		

Relay Test

There should be continuity between the A and B terminals when the battery is connected to the C and D terminals.
There should be no continuity when the battery is disconnected.

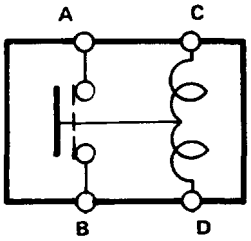

B-Type:

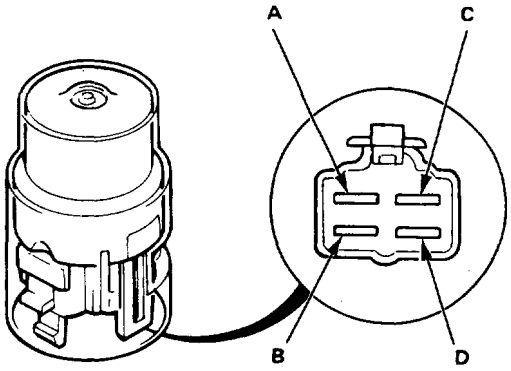

A-Type:

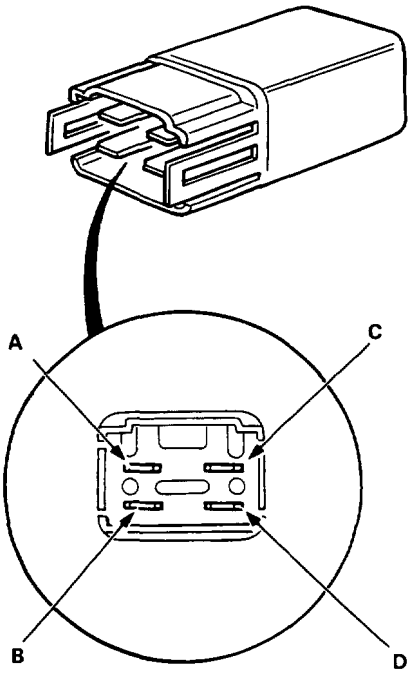

C-Type:

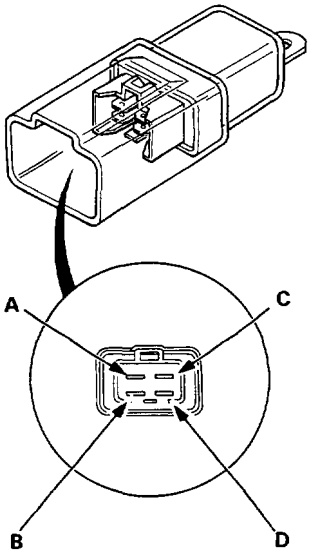

Gauge Assembly

Gauge/Indicator Location Index

GAUGE ASSEMBLY
Removal, page 16-56
Disassembly, page 16-57

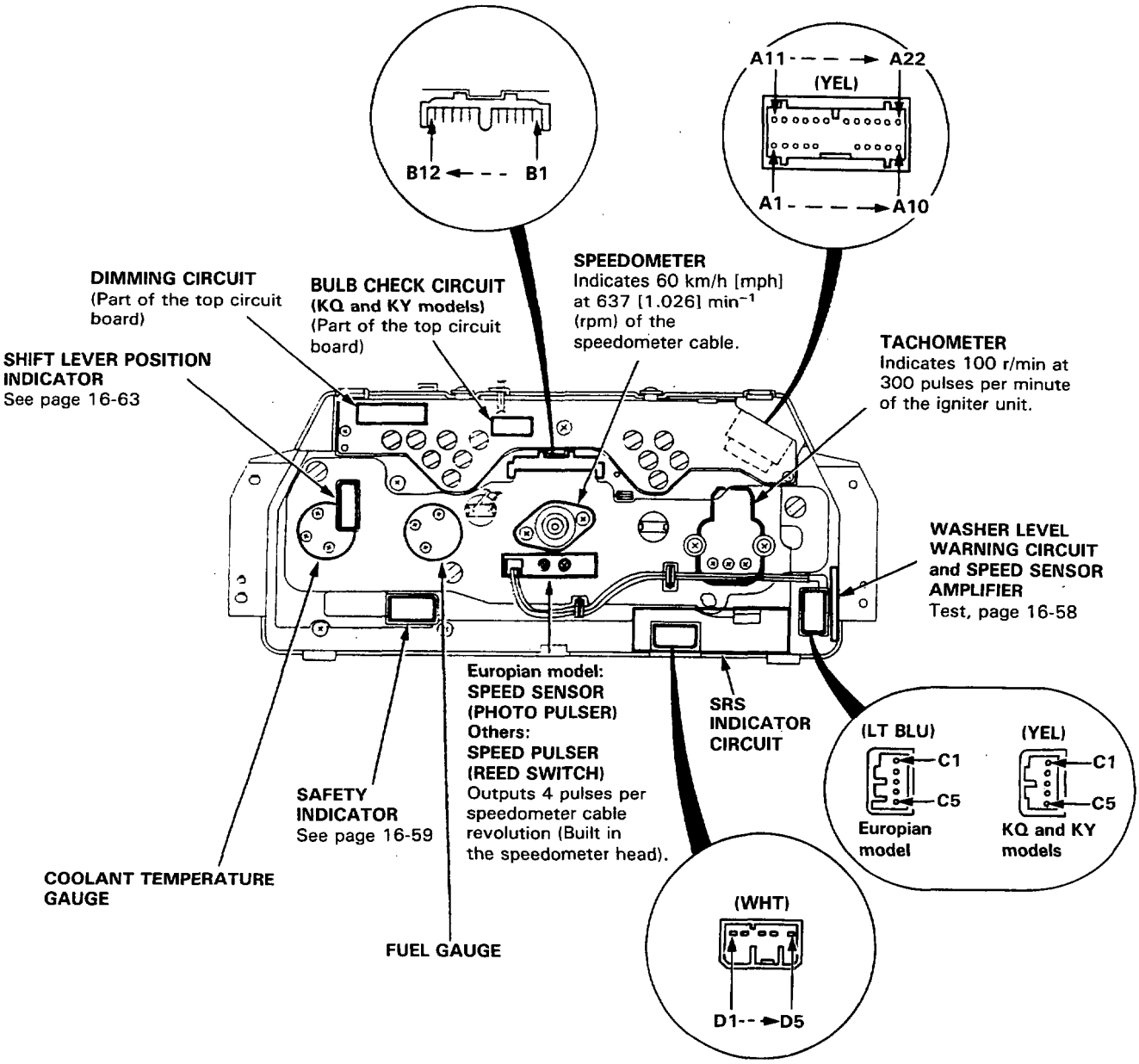

Bulb Locations

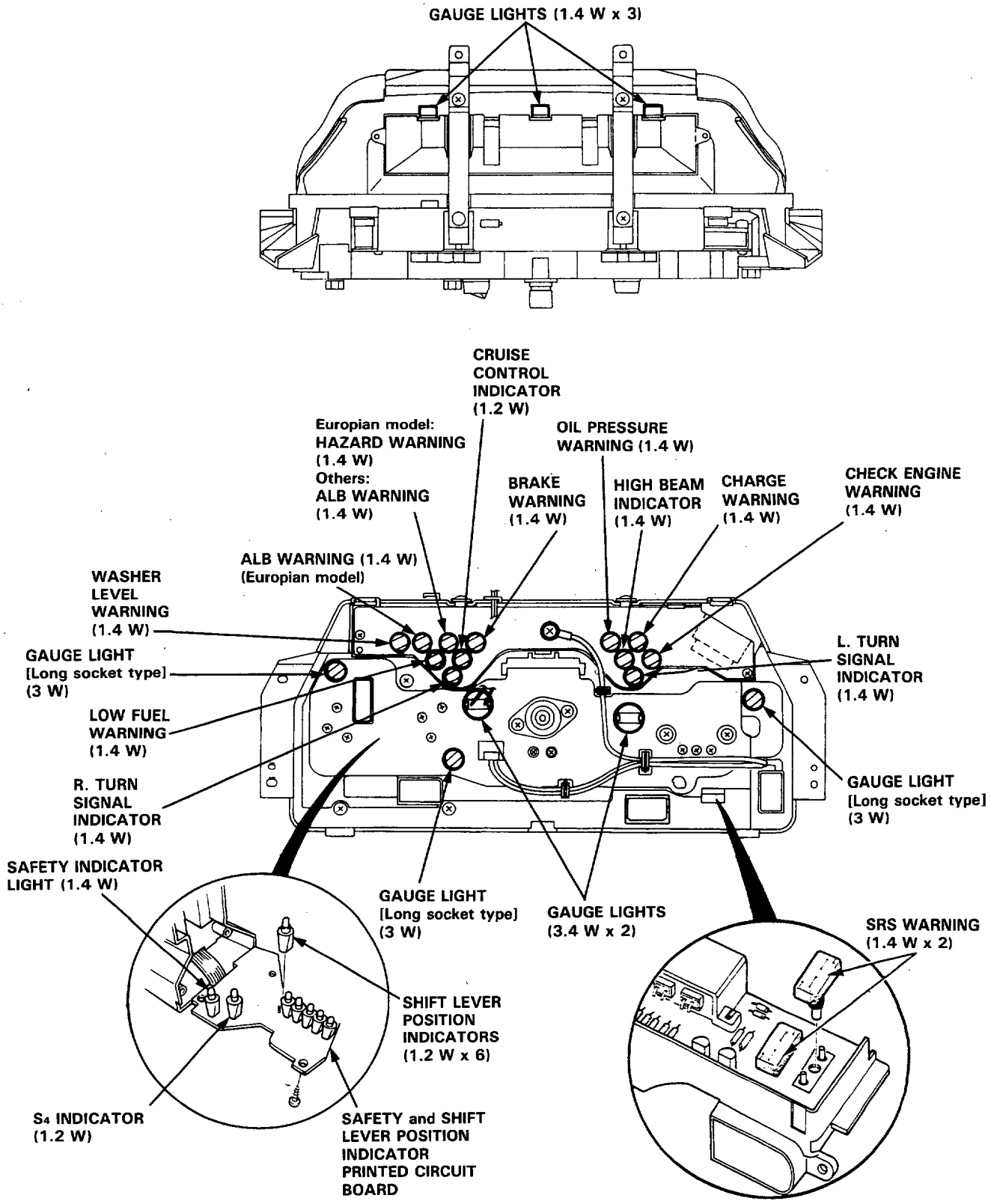

Gauge Assembly

Circuit Diagram

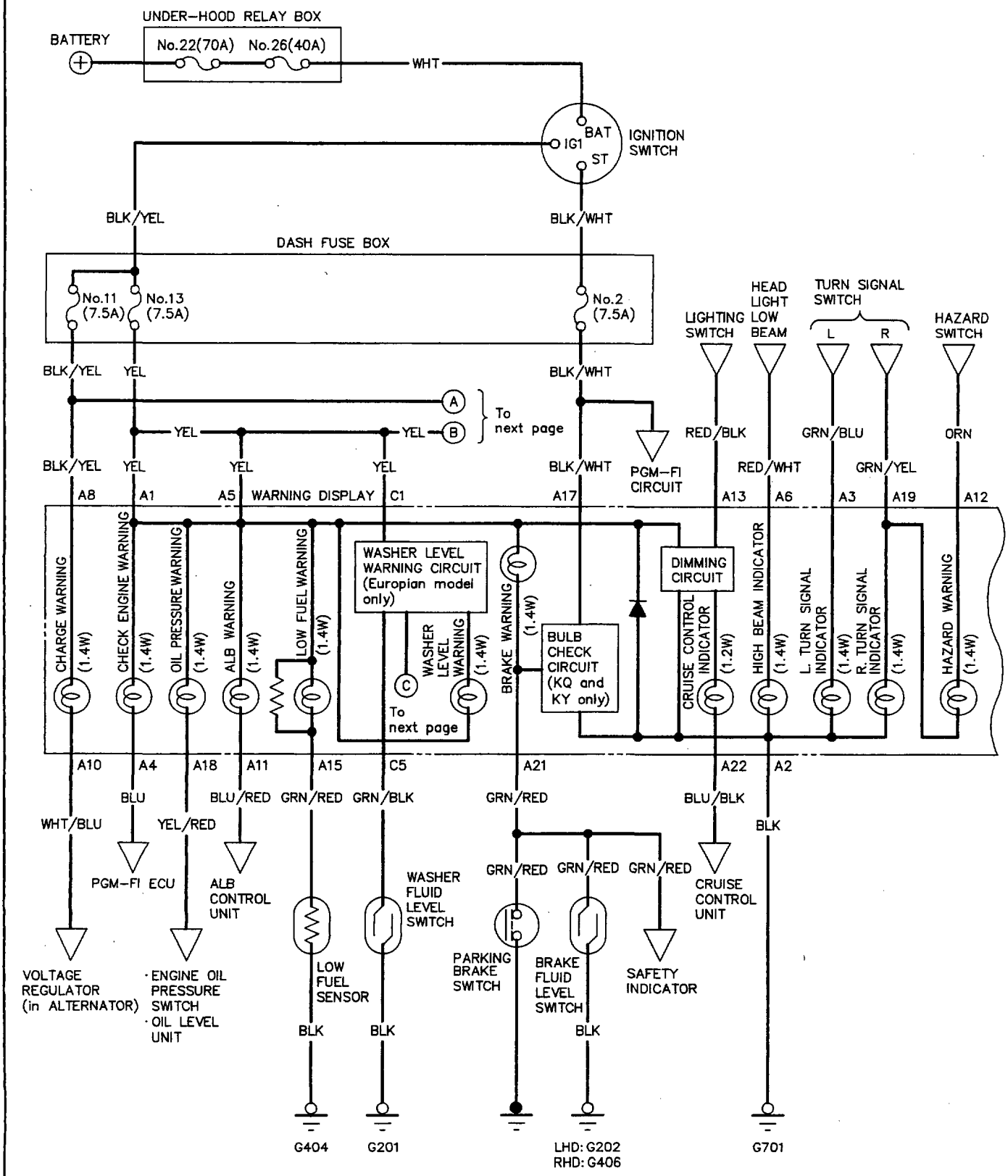

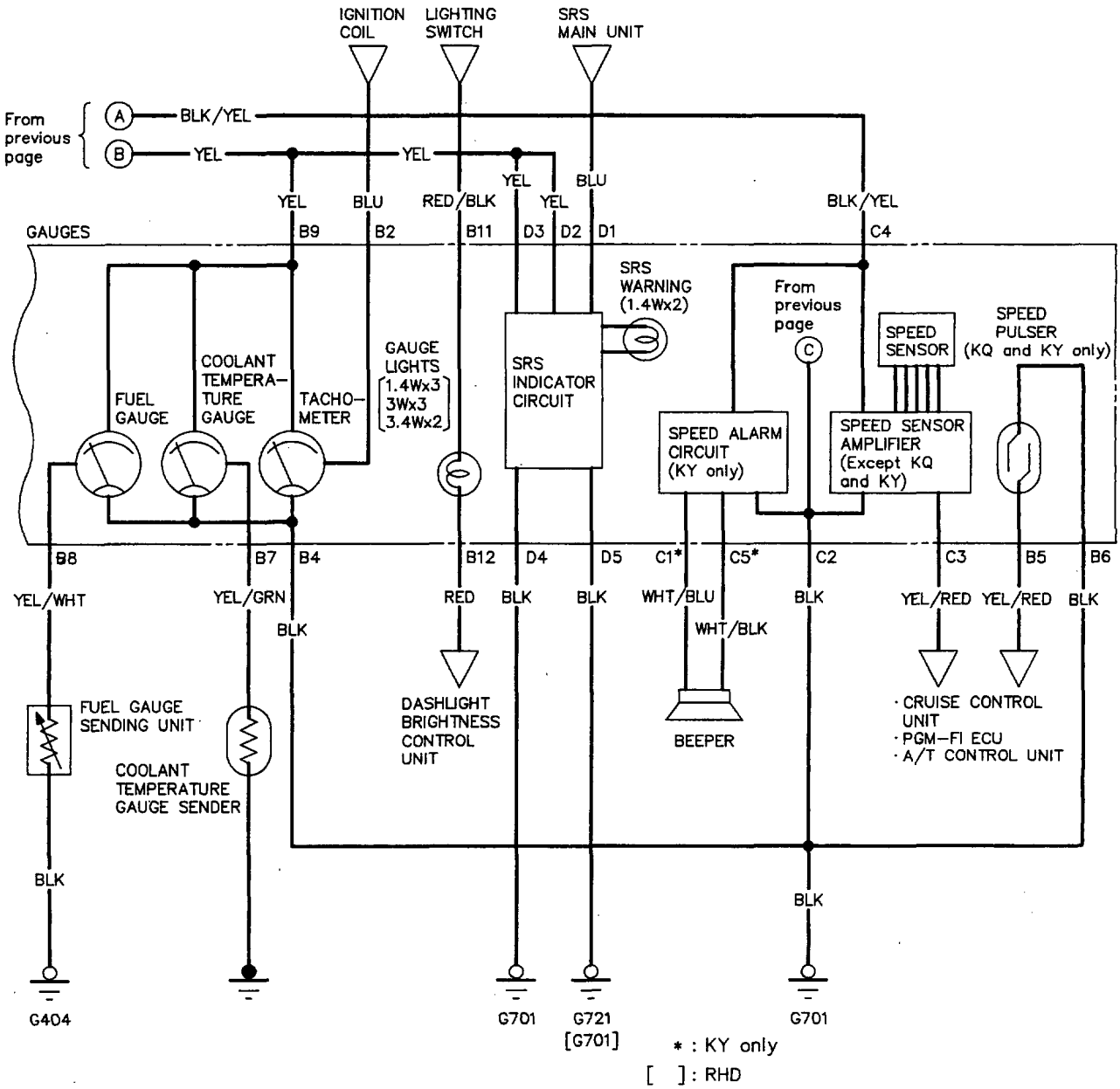
IGNITION COIL
LIGHTING SWITCH
SRS MAIN UNIT
From previous page
A
B
BLK/YEL
YEL
YEL
YEL
YEL
BLU
YEL
BLU
RED/BLK
BLK/YEL
GAUGES
B9
B2
B11
D3
D2
D1
C4
SRS WARNING (1.4Wx2)
From previous page
C
SPEED SENSOR
SPEED PULSER (KQ and KY only)
COOLANT TEMPERA-TURE GAUGE
GAUGE LIGHTS
1.4Wx3
3Wx3
3.4Wx2
SRS INDICATOR CIRCUIT
FUEL GAUGE
TACHO-METER
SPEED ALARM CIRCUIT (KY only)
SPEED SENSOR AMPLIFIER (Except KQ and KY)
B8
B7
B4
B12
D4
D5
C1*
C5*
C2
C3
B5
B6
YEL/WHT
YEL/GRN
BLK
RED
BLK
BLK
WHT/BLU
WHT/BLK
BLK
YEL/RED
YEL/RED
BLK
FUEL GAUGE SENDING UNIT
COOLANT TEMPERATURE GAUGE SENDER
DASHLIGHT BRIGHTNESS CONTROL UNIT
BEEPER
· CRUISE CONTROL UNIT
· PGM-FI ECU
· A/T CONTROL UNIT
BLK
BLK
G404
G701
G721
[G701]
G701
* : KY only
[ ] : RHD

Gauge Assembly

Removal

NOTE:
- All SRS electrical wiring harness are covered with yellow outer insulation.
- Replace the entire affected SRS harness assembly if there is an open circuit or damage to the wiring.
- There is SRS indicator circuit board in the gauge assembly. Carefully disconnect the 5-P connector (WHT) from the gauge assembly.
- After the gauge assembly is installed, make sure that the SRS indicator turns on normally.

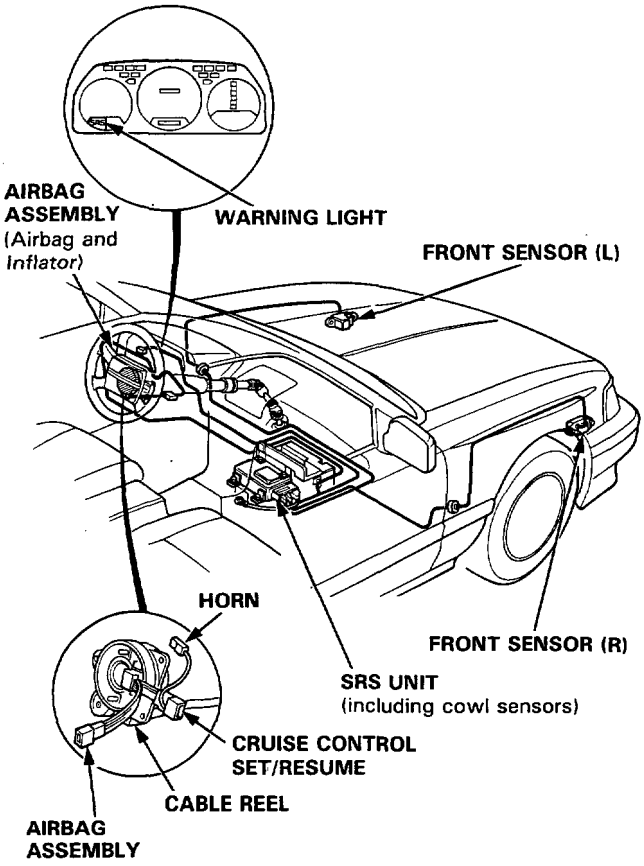

1. Remove the 4 screws, then remove the instrument panel from the dashboard.

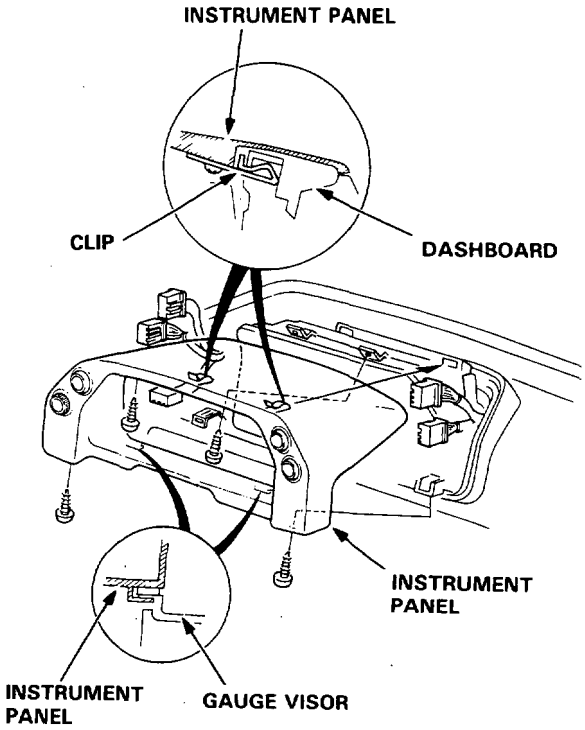

2. Remove the 4 screws, then pull the gauge assembly out half-way and disconnect the speedometer cable and connectors.

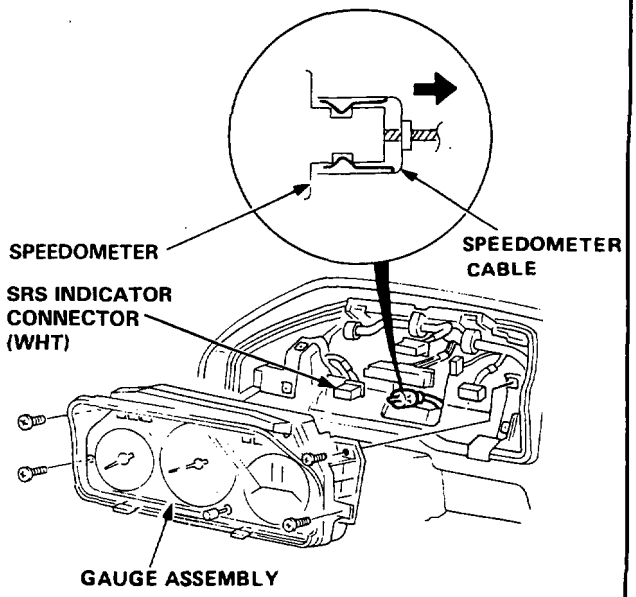

Disassembly

NOTE: Handle the terminals and printed circuits carefully to avoid damaging them.

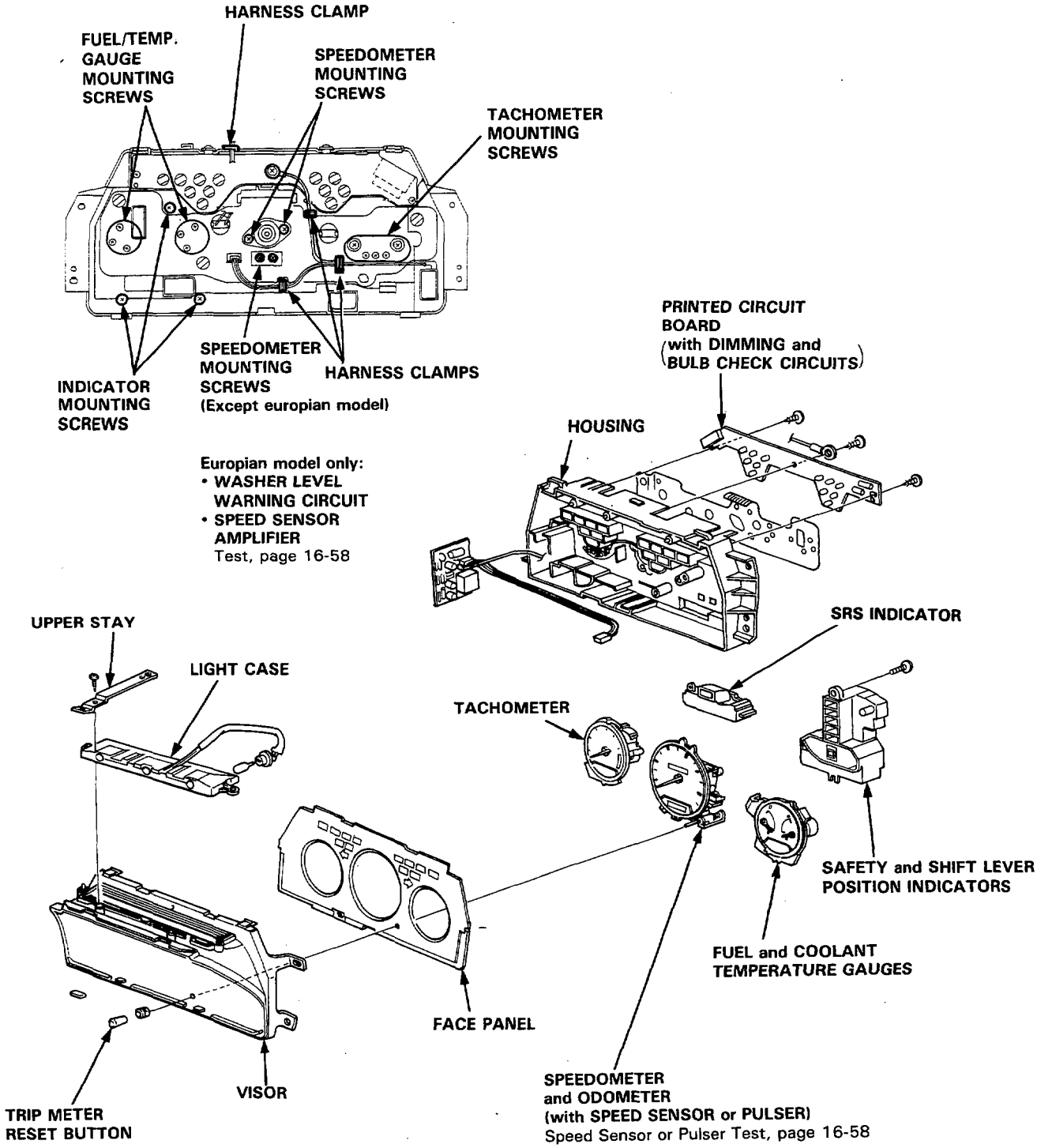

Gauge Assembly

Speed Sensor Test

1. Remove the gauge assembly from the dashboard leaving the 5-P (LT BLU) connector connected to the speed sensor amplifier.

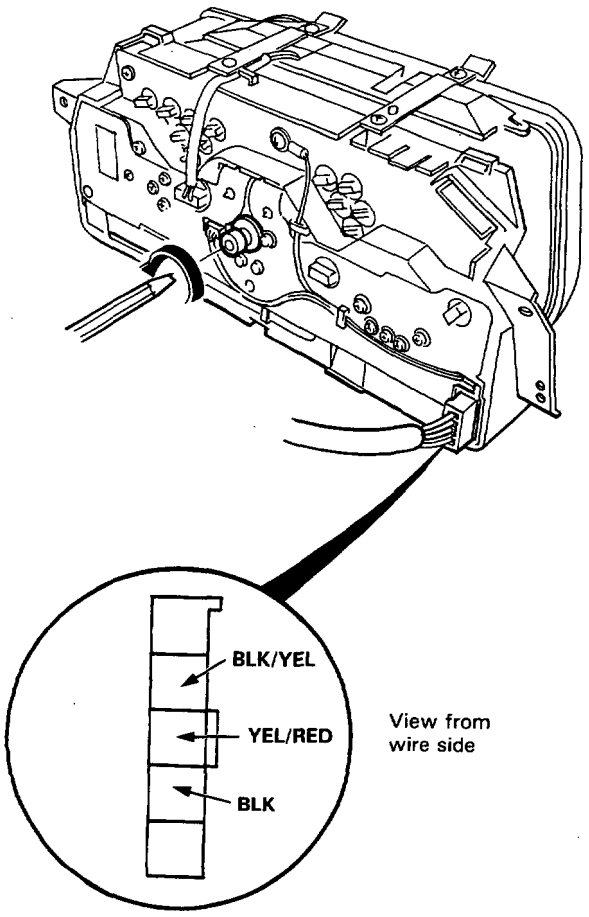

2. Check voltage between the BLK/YEL terminal and body ground with the ignition switch ON.
   There should be battery voltage.

3. Check for continuity between the BLK terminal and body ground.
   There should be continuity.

4. Connect the voltmeter positive probe to the BLK/YEL terminal and the negative probe to the YEL/RED terminal.

5. Break the lead off a pencil tip, then insert a pencil into the speedometer cable connector socket and turn it with the ignition switch ON. There should be 0-12-0-12 V repeatedly.

Speed Pulser Test

1. Remove the gauge assembly from the dashboard, then turn it over.

2. Break the lead off a pencil tip, then insert a pencil into the speedometer cable connector socket and turn it.
   There should be continuity 4 times between the A and B terminals per revolution.

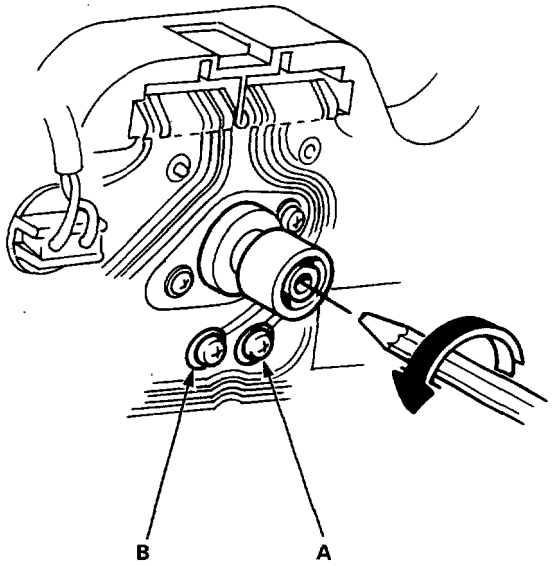

Safety Indicator

Component Location Index

SRS wire harness is routed near the safely indicator related parts (SRS wire harness locations, page 16-117).

⚠WARNING All SRS wire harness and connectors are colored yellow.
Do not use electrical test equipment on these circuit.

CAUTION: Be careful not to damage SRS wire harness when servicing the safety indicator.

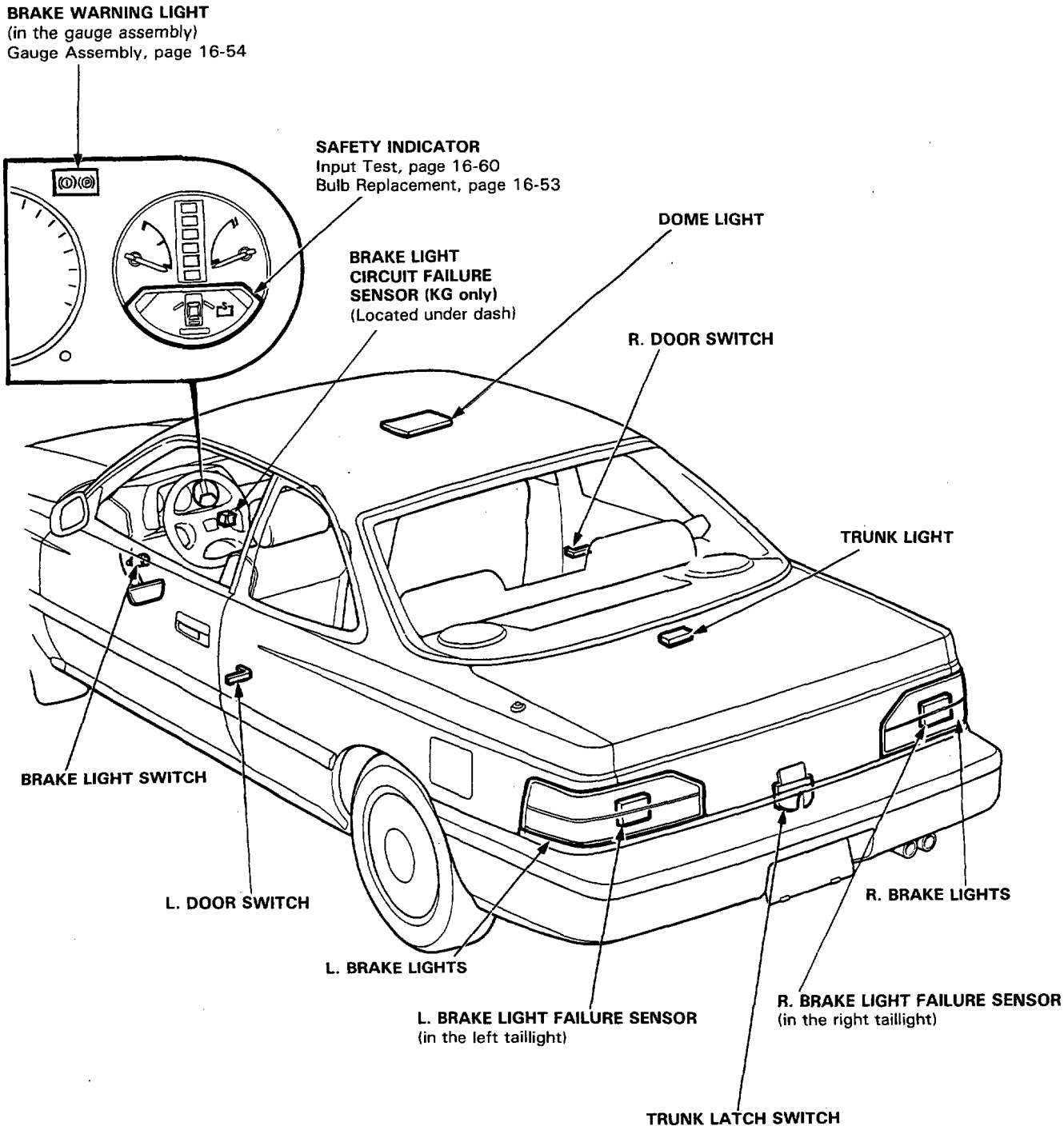

Safety Indicator

Indicator Input Test

Remove the gauge assembly from the dashboard (see page 16-56) to disconnect the 16-P connector from the indicator.
Make the following input tests at the harness pins.
If all tests prove OK, yet the indicator still fails to work, replace the indicator assembly.

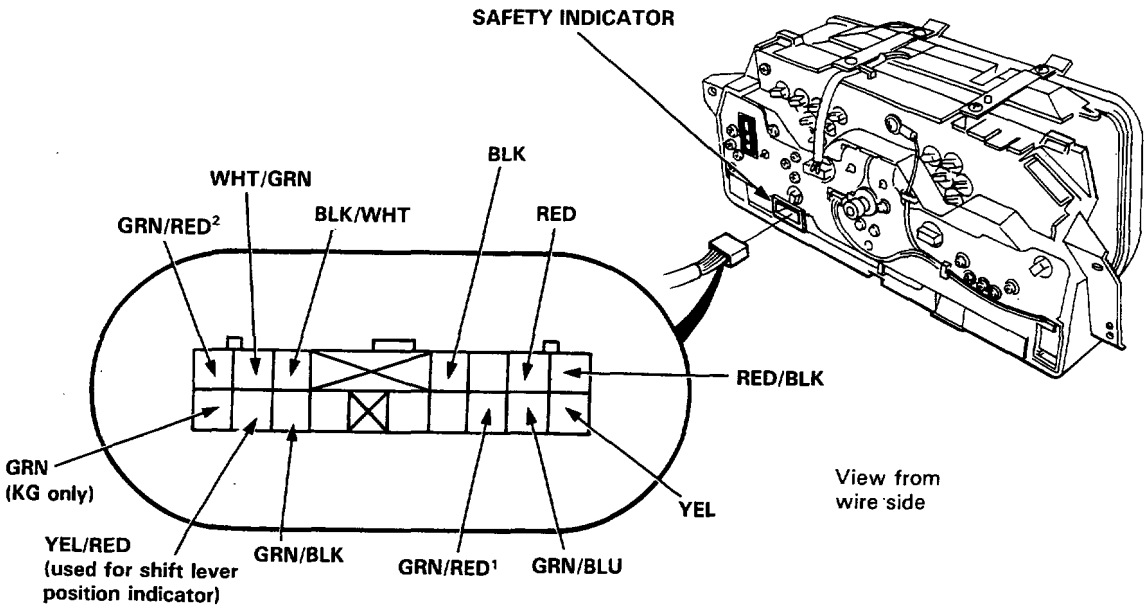

No.	Wire	Test condition	Test: desired result	Possible cause (if result is not obtained)
1	BLK	Under all conditions.	Check for continuity to ground: should be continuity.	• Poor ground (G701). • An open in the wire.
2	YEL	Ignition switch ON.	Check for voltage to ground: should be battery voltage.	• Blown No. 13 (7.5A) fuse. • An open in the wire.
3	WHT/GRN	Brake pedal pushed.	Check for continuity to ground: should be continuity with the pedal pushed.	• Blown No. 31 (20A) fuse. • Faulty brake light switch. • Blown brake light bulbs. • Faulty brake light failure sensors. • Poor ground. (KG model: G503, Others: G501) • An open in the WHT/GRN or GRN/WHT wire.
4	GRN/BLK	Trunk lid opened.	Check for continuity to ground: should be continuity. NOTE: Before testing, remove No. 3 (15A) fuse.	• Faulty trunk latch switch. • An open in the wire.
5	RED/BLK and RED	Light switch ON and dashlight brightness control dial in full bright.	Check for voltage between RED/BLK (+) and RED (−) terminals: should be battery voltage.	• Faulty dashlight brightness control system. • An open in the wire.
6	GRN/BLU	Left door opened.	Check for continuity to ground: should be continuity. NOTE: Before testing, remove No. 3 (15A) fuse.	• Faulty door switch. • An open in the wire.
	GRN/RED[1]	Right door opened.		
7	BLK/WHT	Dome light switch in MIDDLE position.	Attach to ground: Dome light should come on.	• Blown No. 3 (15A) fuse. • Faulty dome light. • An open in the WHT/BLU or BLK/WHT wire.
8	GRN/RED[2]	Ignition switch ON.	Attach to ground: Brake warning light in the gauge assembly should come on.	• Blown bulb. • An open in the wire.

KG model only:

9	GRN	With brake pedal released, ignition switch OFF to ON.	Check for voltage between YEL (+) and GRN (−) terminals: should be battery voltage as the ignition switch is turned ON, then 0V with the brake pedal pushed.	• Faulty brake light circuit failure sensor.

Shift Lever Position Indicator

Component Location Index

SRS wire harness is routed near the shift position indicator related parts (SRS wire harness locations, page 16-117).

⚠WARNING All SRS wire harness and connectors are colored yellow.
Do not use electrical test equipment on these circuit.

CAUTION: Be careful not to damage SRS wire harness when servicing the shift position indicator.

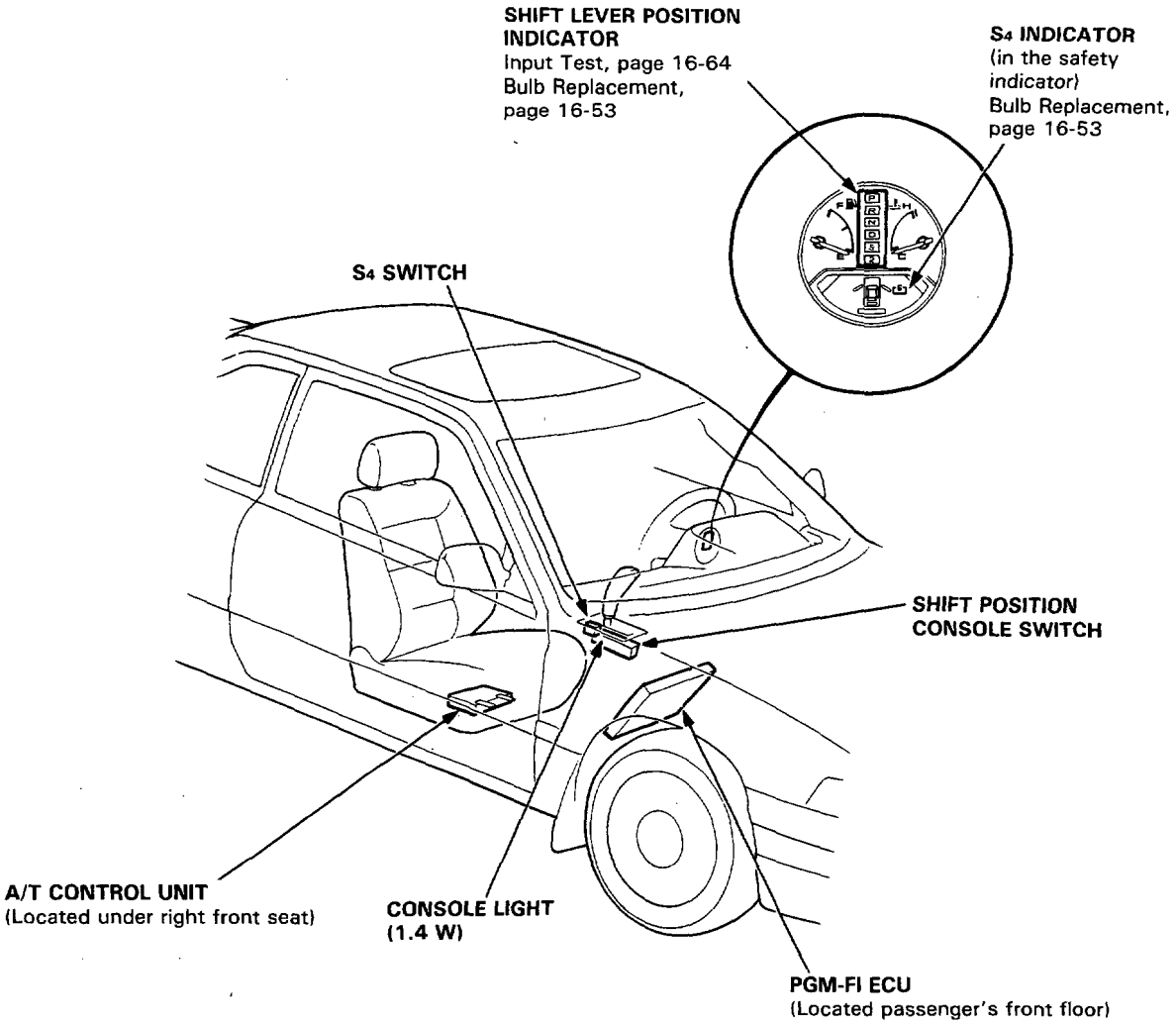

Shift Lever Position Indicator

Indicator Input Test

Remove the gauge assembly from the dashboard (see page 16-48) to disconnect the 10-P and 16-P connectors from the indicators.
Make the following input tests at the harness pins.
If all tests prove OK, yet the indicator still fails to work, replace the indicator assembly.

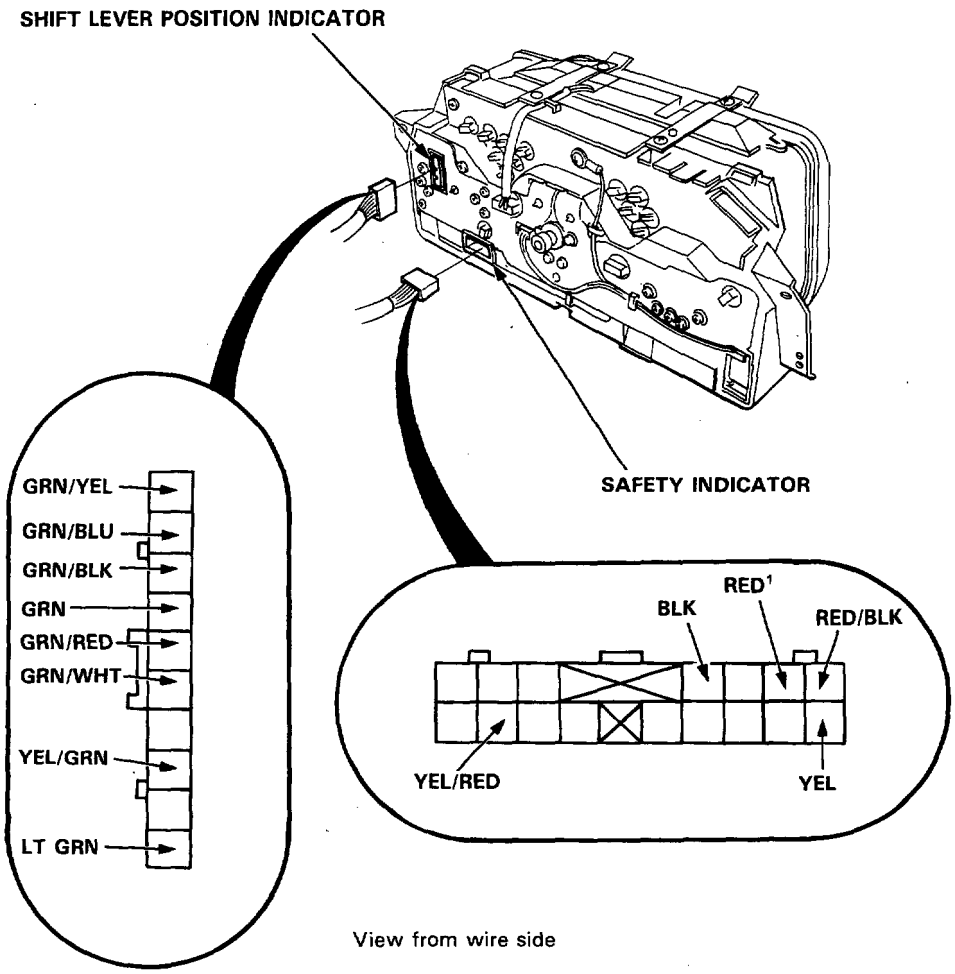

No.	Wire	Test condition	Test: desired result	Possible cause (if result is not obtained)
1	BLK	Under all conditions.	Check for continuity to ground: should be continuity.	• Poor ground (G701). • An open in the wire.
2	YEL	Ignition switch ON.	Check for voltage to ground: should be battery voltage.	• Blown No. 13 (7.5A) fuse. • An open in the wire.
3	GRN/WHT	Shift lever position in P.	Check for continuity to ground: should be continuity.	• Faulty shift position console switch. • Poor ground (G701). • An open in the wire.
	GRN/RED	Shift lever position in R.		
	GRN	Shift lever position in N.		
	GRN/BLK	Shift lever position in D.		
	GRN/BLU	Shift lever position in S.		
	GRN/YEL	Shift lever position in 2.		
4	RED/BLK and RED	Lighting switch ON and dashlight brightness control dail on full bright.	Check for voltage between RED/BLK and RED terminals: should be battery voltage.	• Faulty dashlight brightness control system. • An open in the wire.
5	LT GRN	Ignition switch ON.	Check for voltage to ground: should be about 10V.	• Faulty PGM-FI system. • Faulty A/T control system. • An open in the wire.
6	YEL/GRN or YEL/RED	Ignition switch ON, S_4 switch ON and shift lever position switch in S.	Check for voltage to ground: should be battery voltage between YEL/RED terminal and ground when the pilot light in the S_4 switch is on.	• Faulty A/T control system. • Faulty S_4 switch. • An open in the wire.

Lighting System

Component Location Index

SRS wire harness is routed near the flasher system related parts (SRS wire harness locations, page 16-117).

⚠WARNING All SRS wire harness and connectors are colored yellow.
Do not use electrical test equipment on these circuit.

CAUTION: Be careful not to damages SRS wire harness when servicing lighting system.

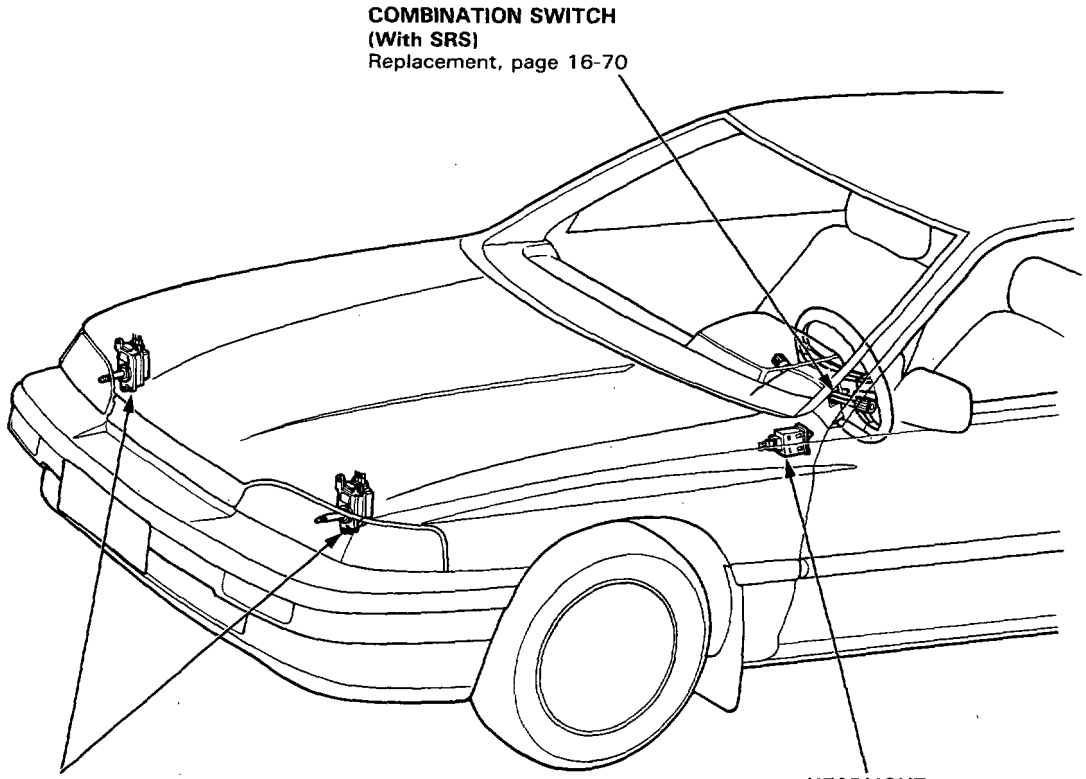

Circuit Diagram

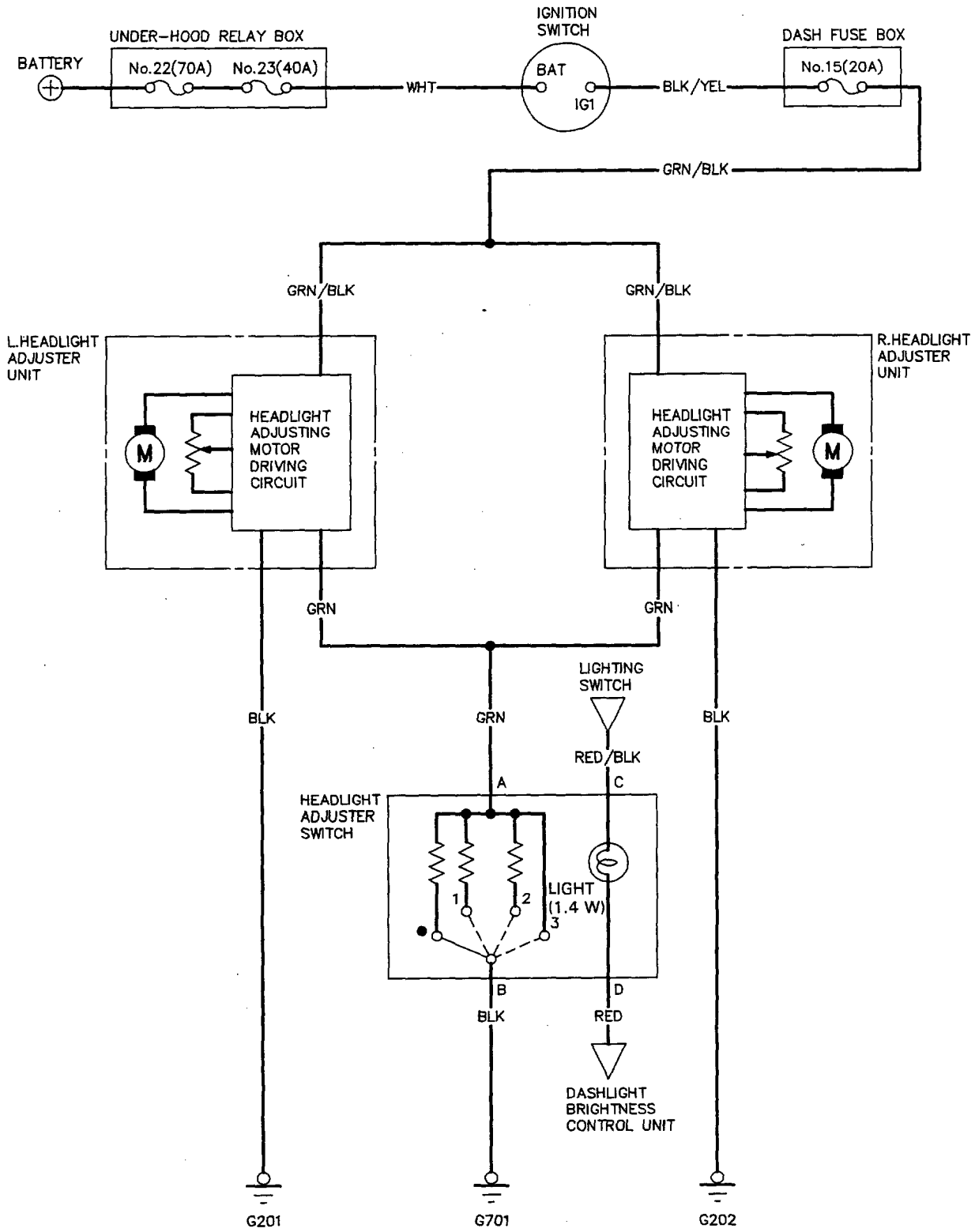

Headlight Adjuster

1. Remove the dashboard lower panel.
2. Push the switch from behind the instrument panel, then disconnect the 5-P connector to remove the switch.

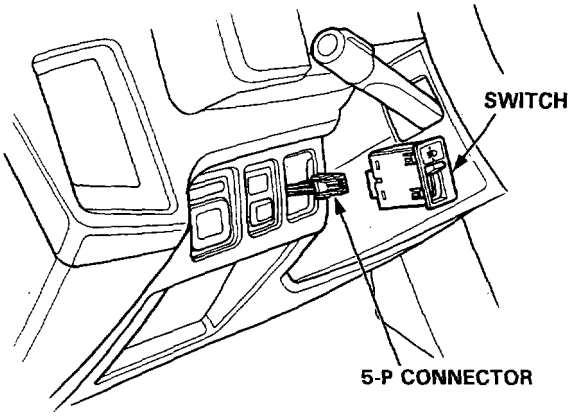

Headlight Adjuster Switch Test

1. Remove the switch.
2. Measure the resistance between the A and B terminals at 0, 1, 2 and 3 position by moving the knob.
   Replace the switch if the resistance is not within specifications.

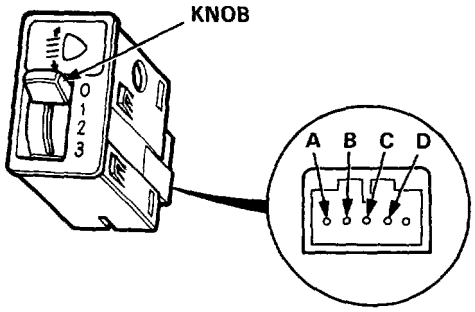

Knob Position	0	1	2	3
Resistance (Ω)	422	215	95	0

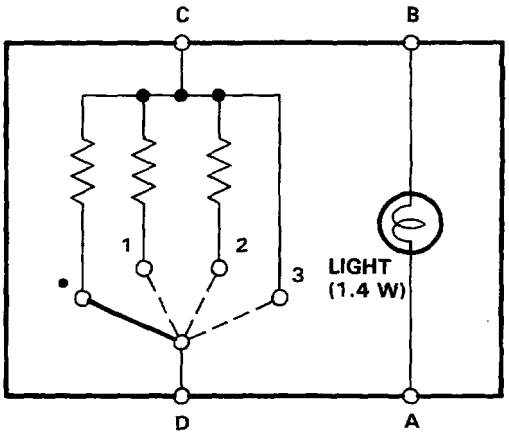

Headlight Adjuster Unit Replacement

1. Disconnect the 3-P connector from the headlight adjuster unit.
2. Remove the 4 screws from the unit.
3. Loosen the nut by turning it counterclockwise to remove the unit.

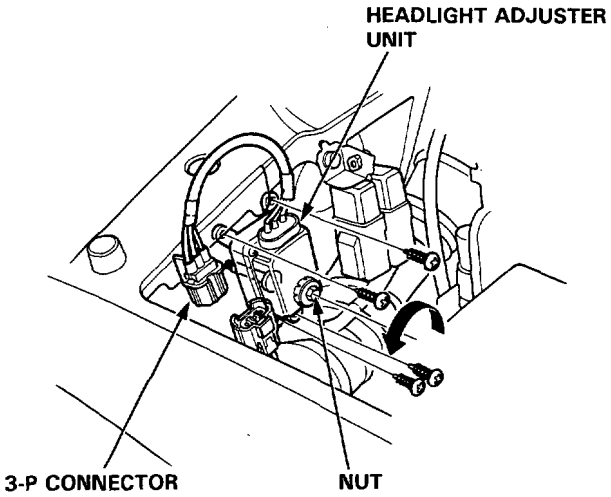

Headlight Adjuster Unit Input Test (KG model only)

NOTE: Check for blown No. 15 (20 A) fuse in the dash fuse box before testing.

1. Disconnect the 3-P connectors for the R and L headlight adjuster units.

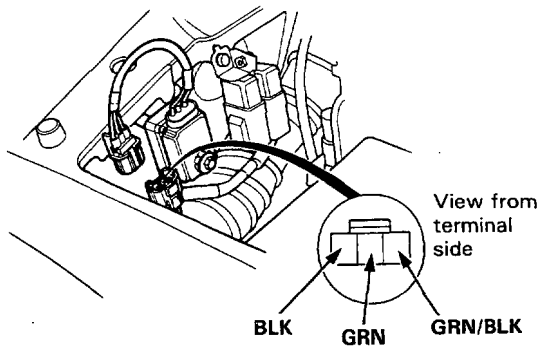

2. Check for continuity between the BLK terminal and body ground.
   There should be continuity.
   - If there is no continuity, check for:
     - An open in the BLK wire.
     - Poor ground (G 201 or G 202).
   - If there is continuity, go to step 3.
3. Check for voltage between the YEL/GRN terminal and body ground with the ignition switch ON.
   There should be battery voltage.
   - If there is no voltage, check for an open in the YEL/GRN wire.
   - If there is battery voltage, go to step 4.
4. Using an ohmmeter, measure resistance between the BLU terminal and body ground in "0" position of headlight adjuster switch. There should be approximately 422 Ω.
   - If resistance is not within specification, check for:
     - An open in the BLU wire.
     - Faulty headlight adjuster switch.
   - If resistance is within specification, go to step 5.
5. If all tests are normal, but the headlight adjuster unit does not operate. Check for frozen, stuck or improperly installed the headlight adjuster unit. If mechanical check is OK, replace the headlight adjuster unit.

   NOTE: Check for connection of 3-P connectors after test. For example, malfunction of headlight adjuster is caused by improper connection of one side.

Combination Switch Replacement

Removal

NOTE : To remove the lighting and wiper combination switches, it is not necessary to remove the steering wheel or airbag assembly.

1. Disconnect both the negative cable and positive cable from the battery.

2. Remove the dashboard lower panel and disconnect the 6-P connector from the winter position switch, and 6-P and 8-P connectors from the wiper control unit on the lower panel.

CAUTION : Do not damage the yellow-covered SRS wiring.

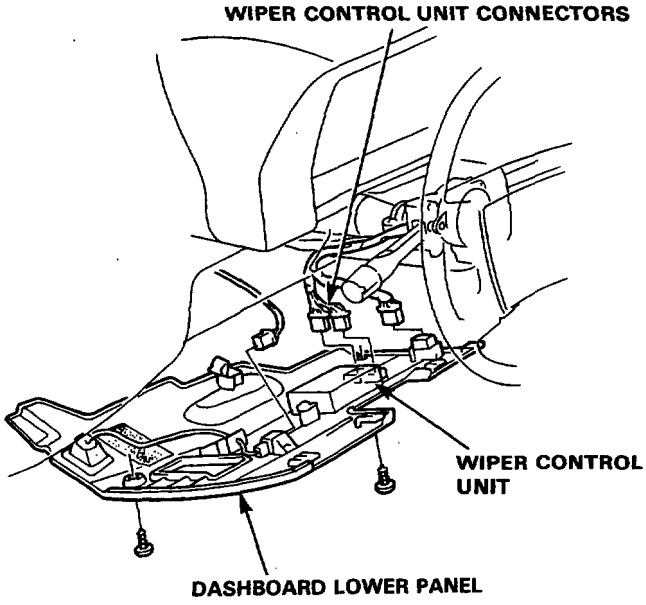

3. Disconnect the combination switch connector.

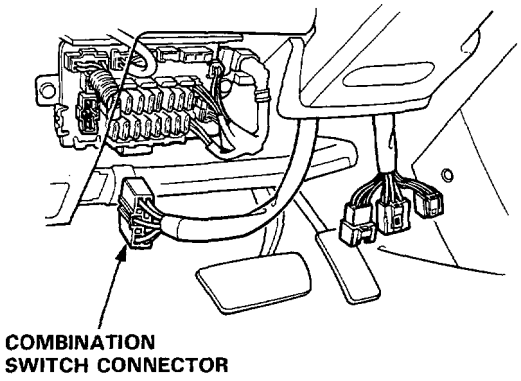

4. Remove the lower and upper covers from the steering column.

5. Remove the lighting and wiper switch mounting screws and remove the switches.

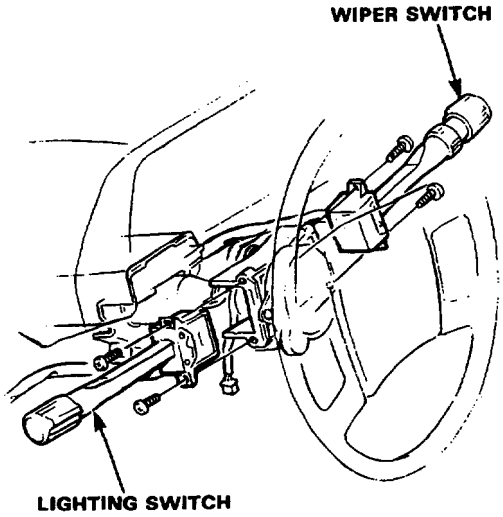

Installation

1. Install the lighting and wiper switches.

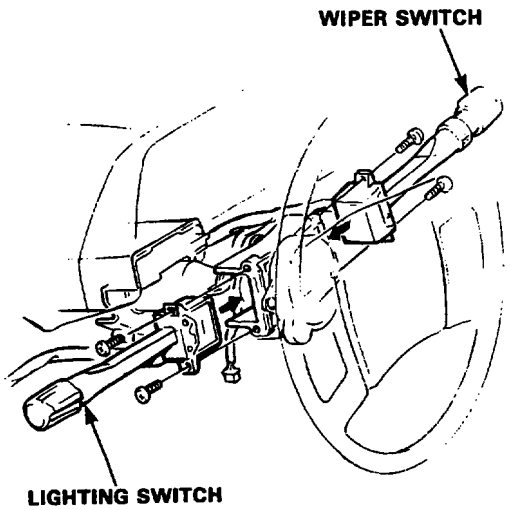

2. Connect the combination switch connector to the dash joint box.

   CAUTION: Be sure to install the harness wires so that they are not pinched by the other car parts.

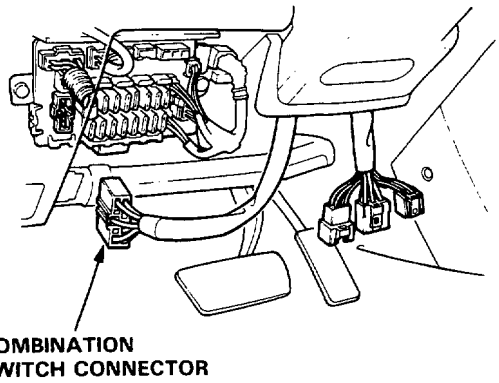

3. Install the column covers.

4. Connect the 6-P connector to the winter position switch, 6-P and 8-P connectors to the wiper control unit on the lower panel and then install the lower panel.

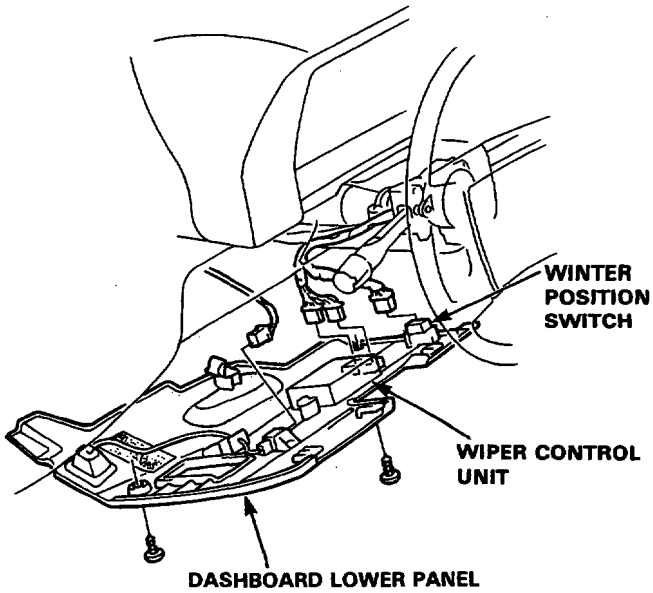

5. Connect both the negative cable and positive cable to the battery.

6. After installing the combination switches, confirm proper system operation of the lighting switch and wiper switch.

Horns

Component Location Index

SRS wire harness is routed near the horns related parts (SRS wire harness locations, page 16-117).

⚠WARNING All SRS wire harness and connectors are colored yellow.
Do not use electrical test equipment on these circuit.

CAUTION: Be careful not to damage SRS wire harness when servicing the horn system.

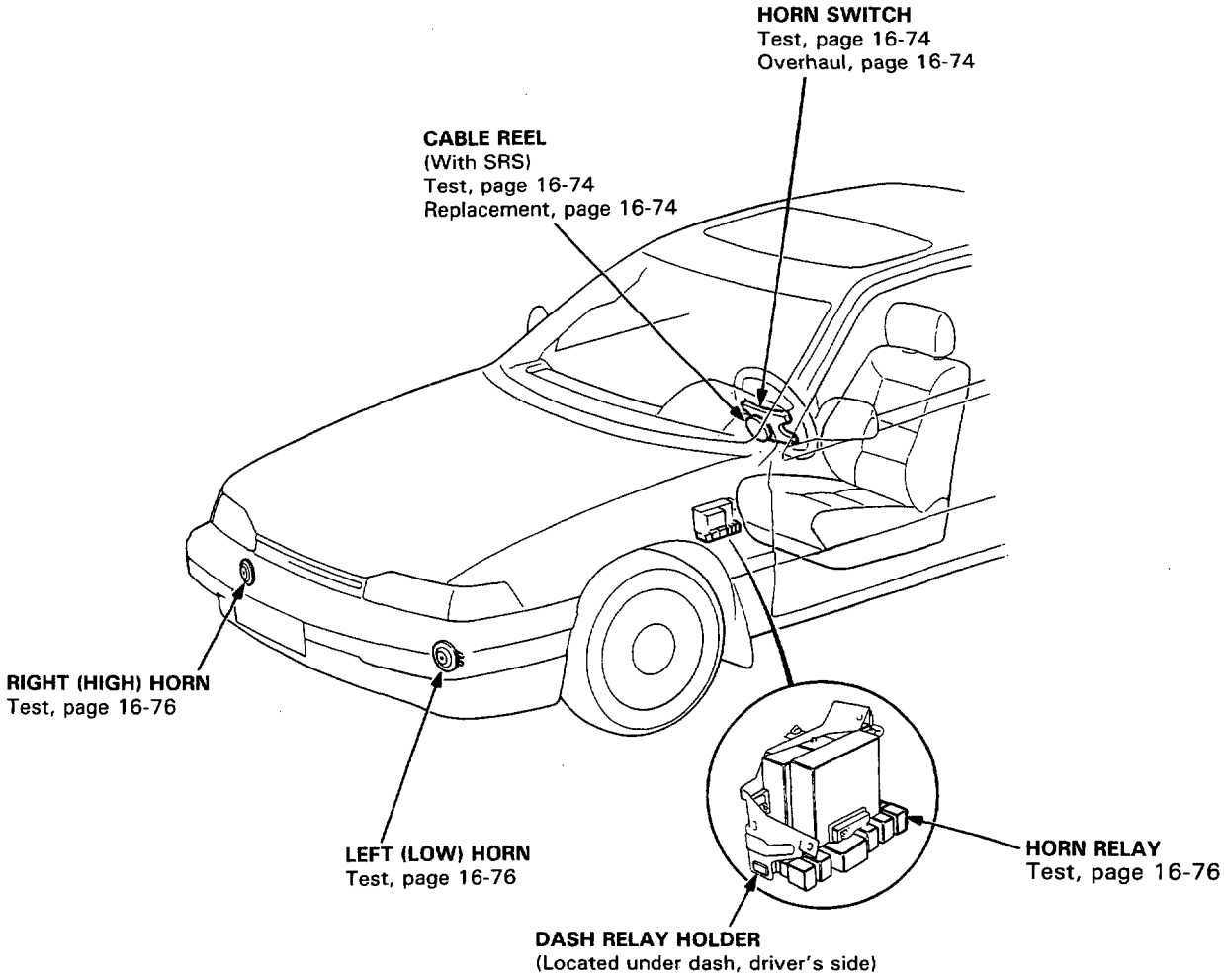

Circuit Diagram

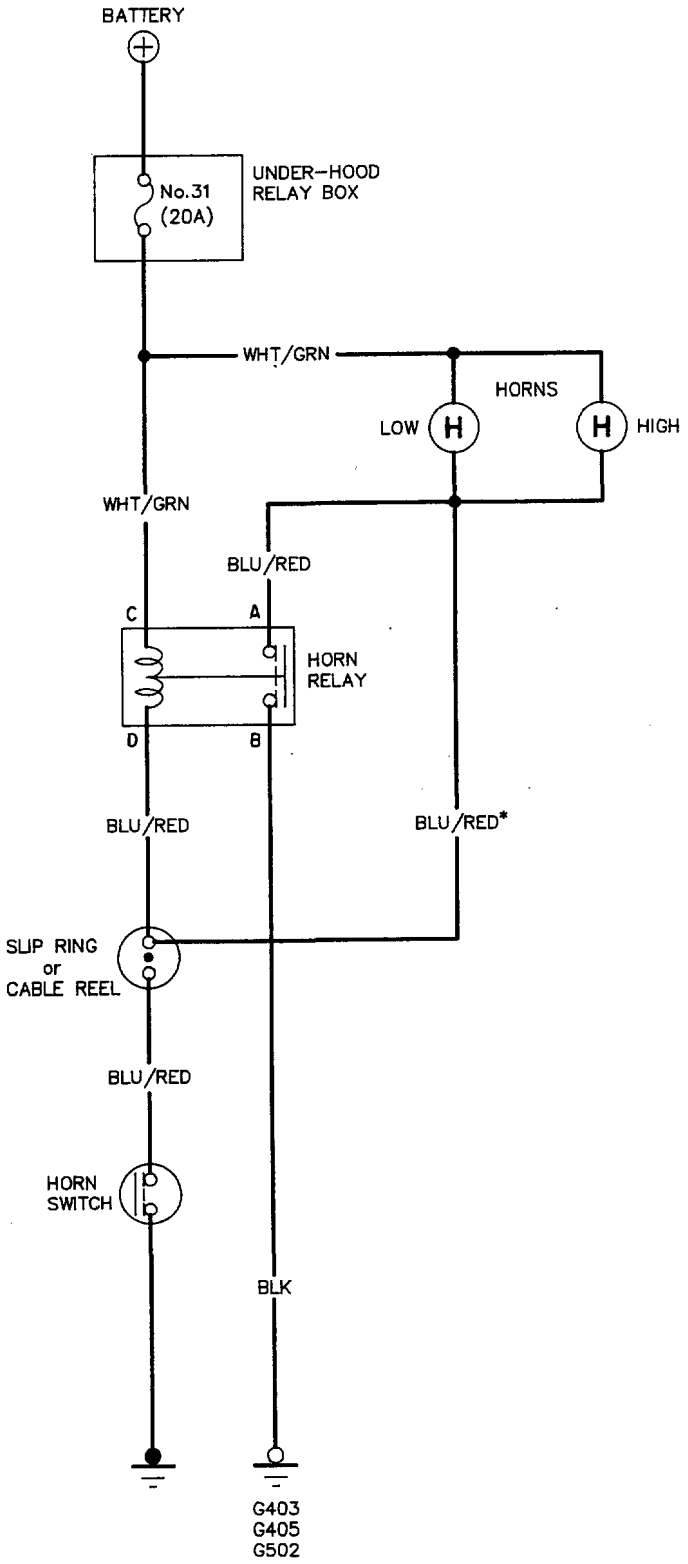

* : without SRS

Switch Test

⚠WARNING Store a removed airbag assembly with the pad surface up. If the airbag is improperly stored face down, accidental deployment could propel the unit with enough force to cause serious injury.

CAUTION:
- **Carefully inspect the airbag assembly before installing. Do not install an airbag assembly that shows signs of being dropped or improperly handled, such as dents, cracks or deformation.**
- **Always keep the short connector on the airbag connector when the harness is disconnected.**
- **Do not disassembly or tamper with the airbag assembly.**

1. Disconnect both the negative cable and positive cable from the battery.
2. Make sure the wheels are aligned straight forward.
3. Remove the dashboard lower panel.
4. Remove the steering wheel maintenance lid A, and disconnect the cable reel harness and airbag assembly 2-P connector. Connect the short connector (Red) to the airbag connector.

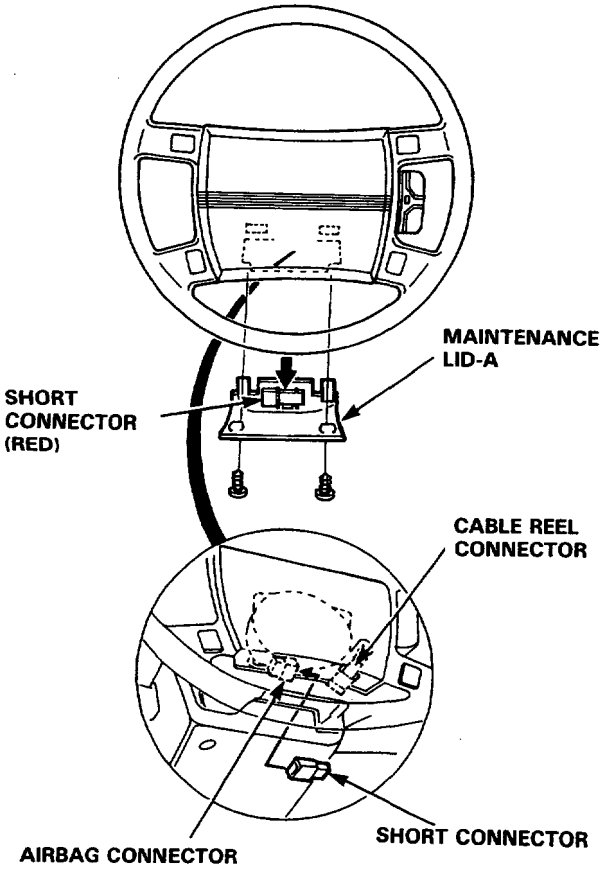

5. Remove the steering column lower cover.
6. Disconnect the cable reel 5-P connector, and connect the SRS test harness C to the cable reel connector.

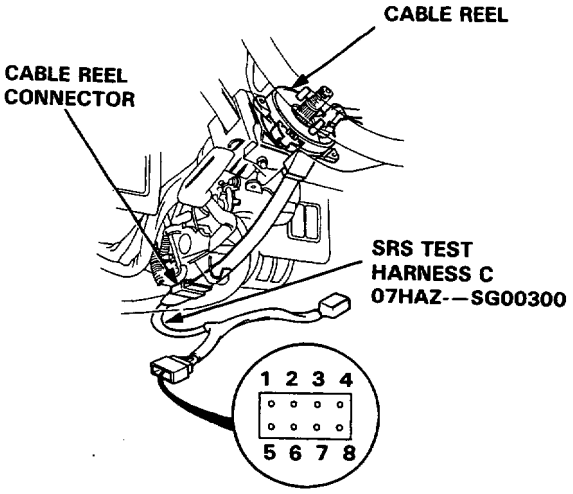

TEST HARNESS CONNECTOR

7. Check for continuity between the No. 3 (BLU/RED) terminal of the 8-P checker connector and body ground with the horn switch pressed.
   There should be continuity.
   - If there is continuity, the horn switch is OK.
   - If there is no continuity, go to step 8.

8. Remove the steering wheel maintenance lid B and remove the cover from the cruise control set switch. *Insert a TORX Ⓡ driver and remove two* TROX Ⓡ bolts, then remove the airbag assembly.

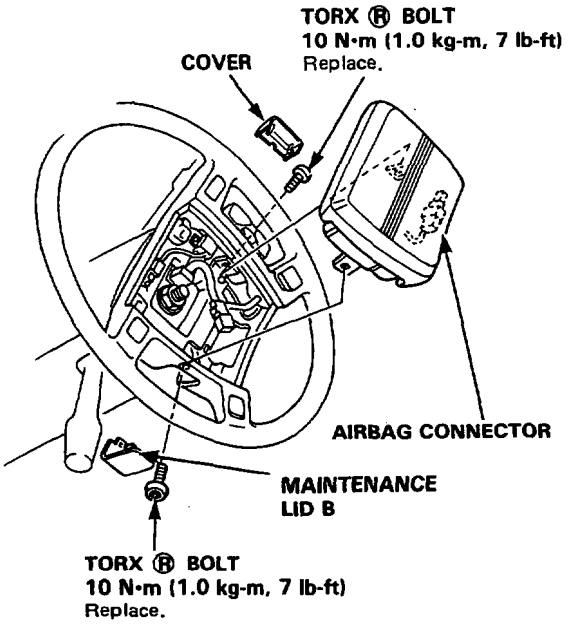

9. Check for continuity between the horn positive terminal and the steering column shaft with the horn switch pressed.
There should be continuity.

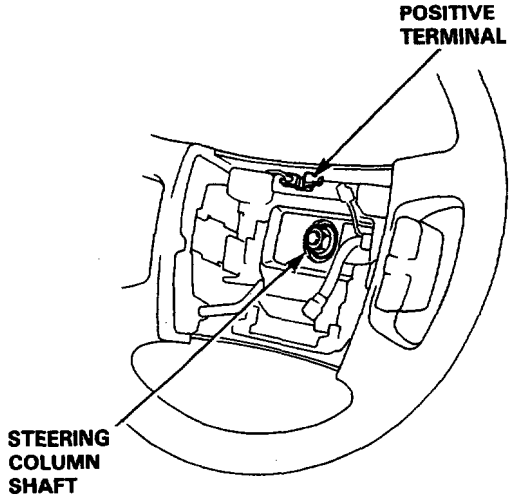

- If there is continuity, replace the cable reel (see section 11).
- If there is no continuity, remove the nut and the 4 screws, then remove the steering wheel cover. Repair the horn switch.

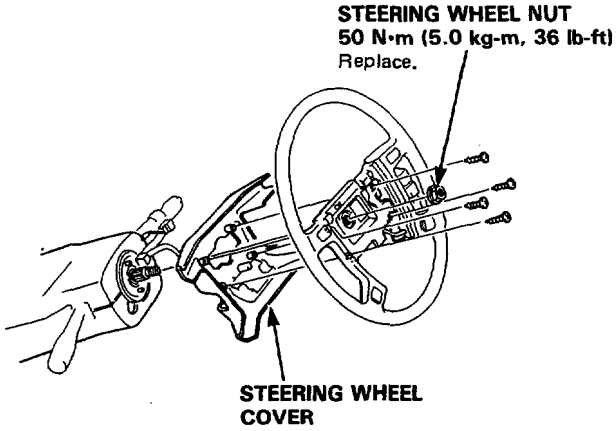

10. Install the steering wheel (see section 11).

Horns

Horn Test

1. Remove the front bumper.
2. Disconnect the wires from the horn.
3. Test the horn by connecting battery voltage to the A and B terminals. The horn should sound.
4. If the horn fails to sound, replace it.

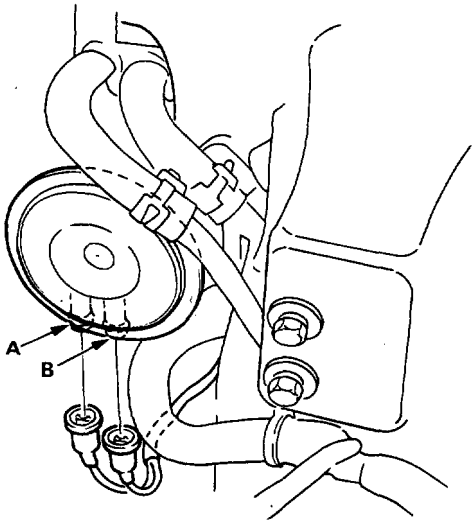

Relay Test

1. Remove the dashboard lower panel and the horn relay in the dash relay holder.
2. There should be continuity between the A and B terminals when the battery is connected to the C and D terminals.
   There should be no continuity when the battery is disconnected.

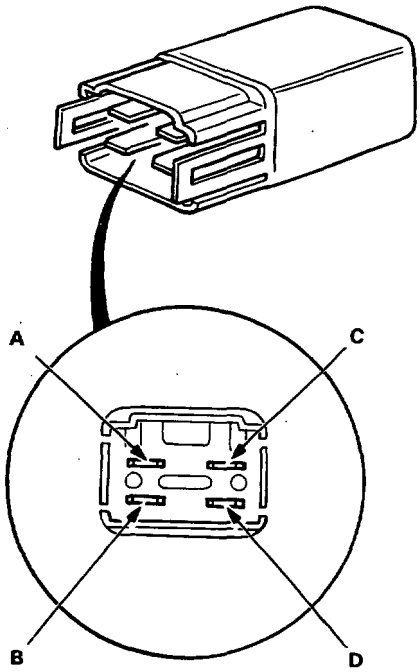

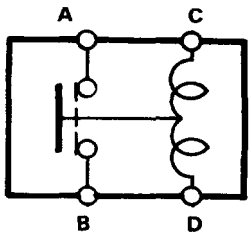

Cruise Control

Component Location Index

SRS wire harness is routed near the cruise control related parts (SRS wire harness locations, page 16-117).

⚠WARNING All SRS wire harness and connectors are colored yellow. Do not use electrical test equipment on these circuit.

CAUTION: Be careful not to damage SRS wire harness when servicing the cruise control system.

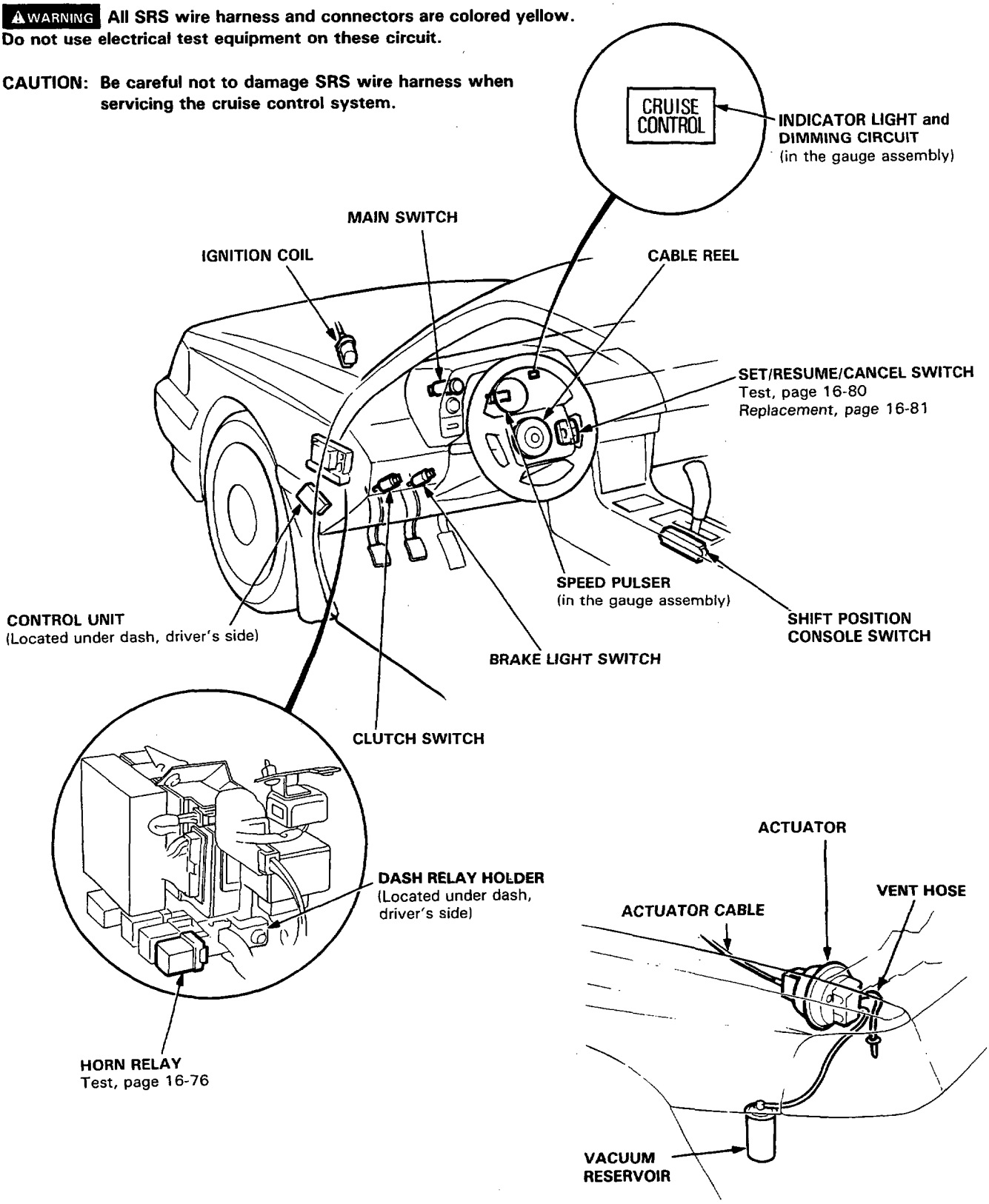

Cruise Control

Circuit Diagram

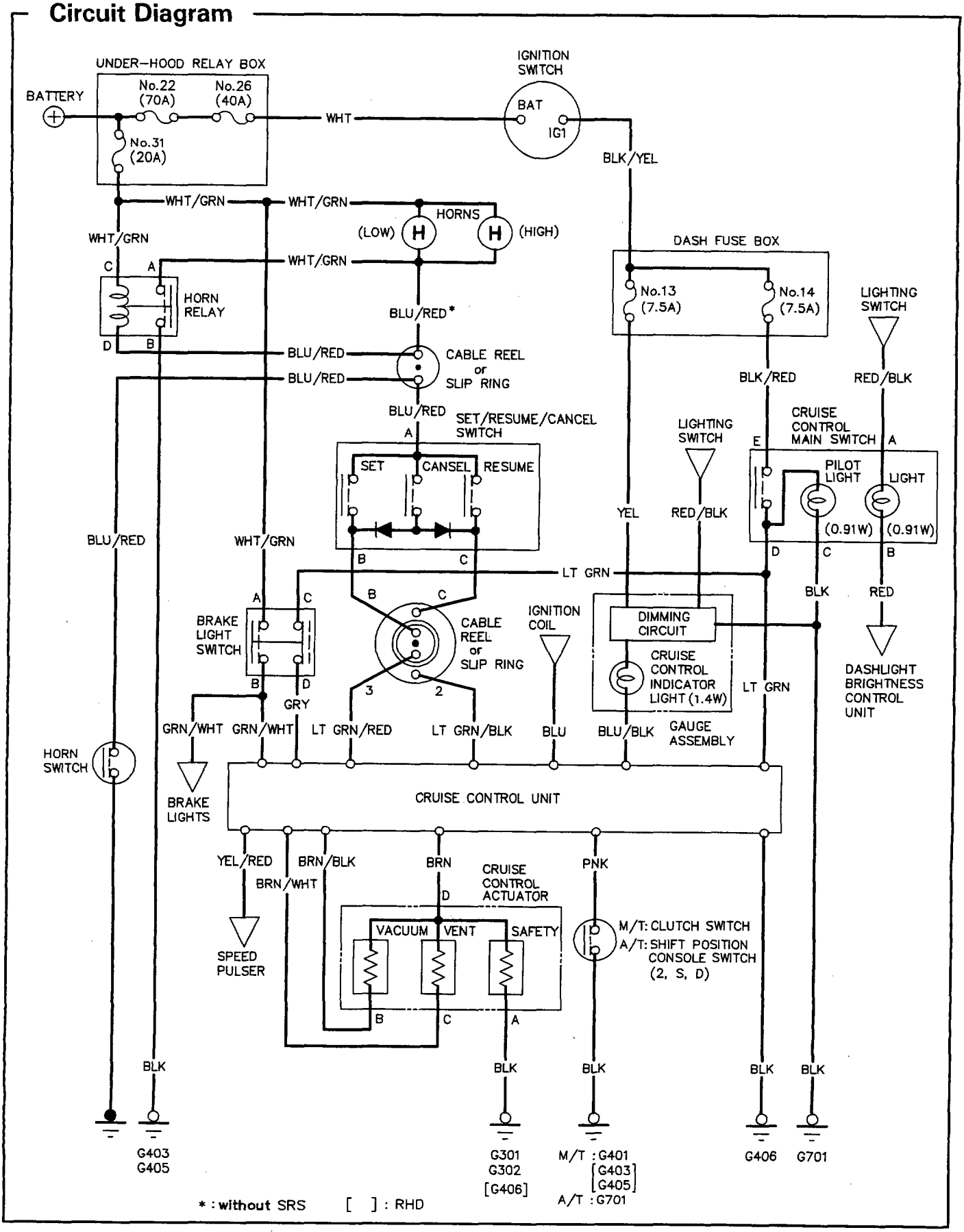

Troubleshooting

NOTE: The numbers in the table show the troubleshooting sequence.

Symptom \ Item to be inspected	Blown No. 14 (7.5 A) fuse (in the dash fuse box)	Main switch	Indicator light and its dimming circuit (in the gauge assembly)	SET/RESUME/CANCEL switch	Cable reel	Actuator cable free play	Actuator	Disconnected, clogged or restricted vacuum lines/stuck check valve/leaky vacuum reservoir	Clutch switch and mounting (M/T)	Shift position console switch (A/T)	Blown No. 31 (20 A) fuse (in the under-hood relay box)	Brake light switch	Control unit input	Poor ground	Open circuit in wires or loose or disconnected terminals
Cruise control can't be set.	1	2											3	G406 or G701	LT GRN or BLK/RED
Cruise control can be set, but indicator light does not go on.			1												BLU/BLK
Cruise speed noticeably higher or lower than what was set.													1		
Excessive overshooting and/or undershooting when trying to set speed.						1	2						3		
Steady speed not held even on a flat road with cruise control set.						1	3	2					4		
Car does not decelerate or accelerate accordingly when SET or RESUME button is pushed.				1	3								2		
Set speed not cancelled when clutch pedal is pushed. (M/T)									1				2		
Set speed not cancelled when shift lever is moved to N. (A/T)										1			2		
Set speed not cancelled when brake pedal is pushed.											1	2	3		
Set speed not cancelled when CANCEL button is pushed.				1	3								2		
Set speed not resumed when RESUME button is pushed (with main switch on, but set speed temporarily cancelled).				1	3								2		

Set/Resume/Cancel Switch Test

⚠WARNING To avoid accidental deployment and possible injury always install the protective short connector on the inflator connector when the harness is disconnected.

1. Remove the dashboard lower panel.
2. Remove the steering wheel maintenance lid A, and disconnect the cable reel harness and airbag assembly 2-P connector. Connect the short connector (Red) to the airbag connector.

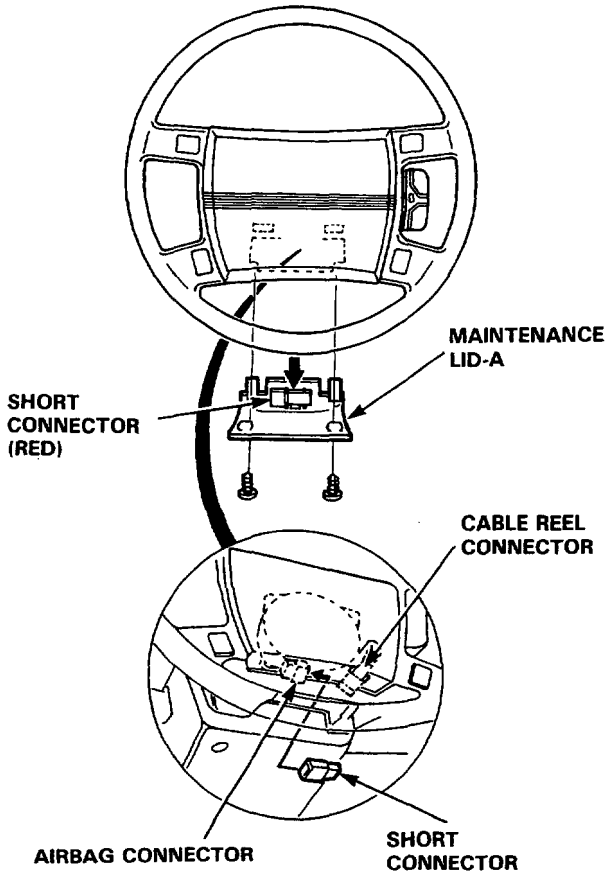

3. Remove the steering column lower cover.
4. Disconnect the cable reel 5-P connector, and connect the SRS test harness C to the cable reel connector.

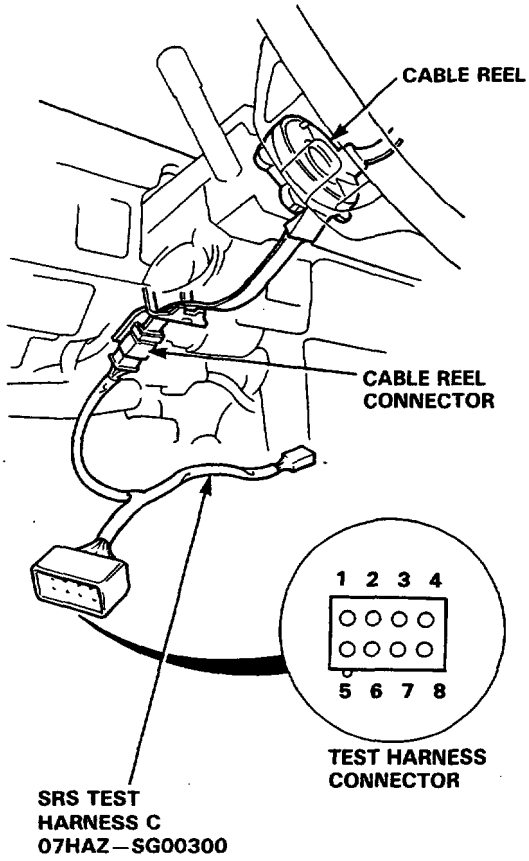

5. Check for continuity between the terminals of the 8-P test harness connector in each switch position according to the table.

Terminal / Position	No.3 (BLU /RED		No. 2 (LTGRN /RED)	No. 1 (LTGRN /BLK)
SET (ON)	O		O	
RESUME (ON)	O			O
CANCEL (ON)	O		O	O

- If the continuity check is OK, the SET/RESUME/CANCEL switch is OK.
- If there is no continuity in one or some switch positions, go to step 6.

6. Remove the cover from the SET/RESUME/CANCEL switch, then remove the 2 screws and pull the switch out of the steering wheel.

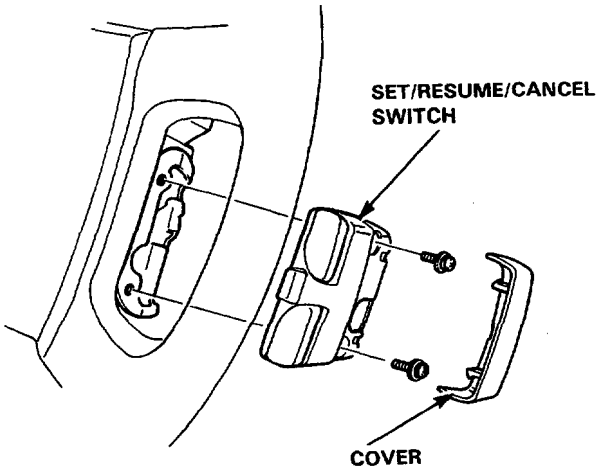

7. Check for continuity between the terminals in each switch position according to the table.

Terminal / Position	A or A'		B	C
SET (ON)	○		○	
RESUME (ON)	○			○
CANCEL (ON)	○	▶|—▶|—	○	○

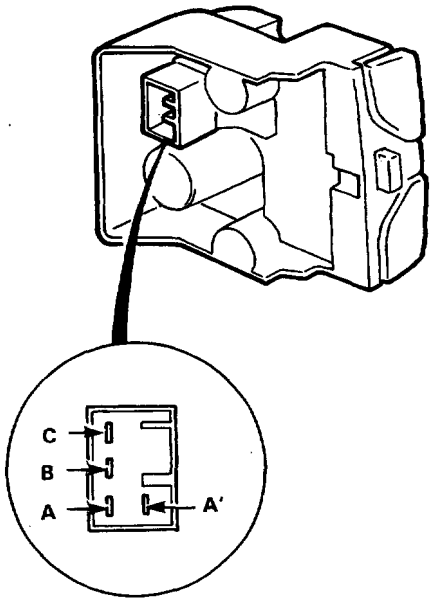

- If there is no continuity in one or some switch positions, replace the SET/RESUME/CANCEL switch.
- If the continuity check is OK, replace the cable reel (see section 11).

Turn Signal/Hazard Flasher System

Component Location Index

SRS wire harness is routed near the flasher system related parts (SRS wire harness locations, page 16-117).

⚠WARNING All SRS wire harness and connectors are colored yellow.
Do not use electrical test equipment on these circuit.

CAUTION: Be careful not to damage SRS wire harness when servicing flasher system.

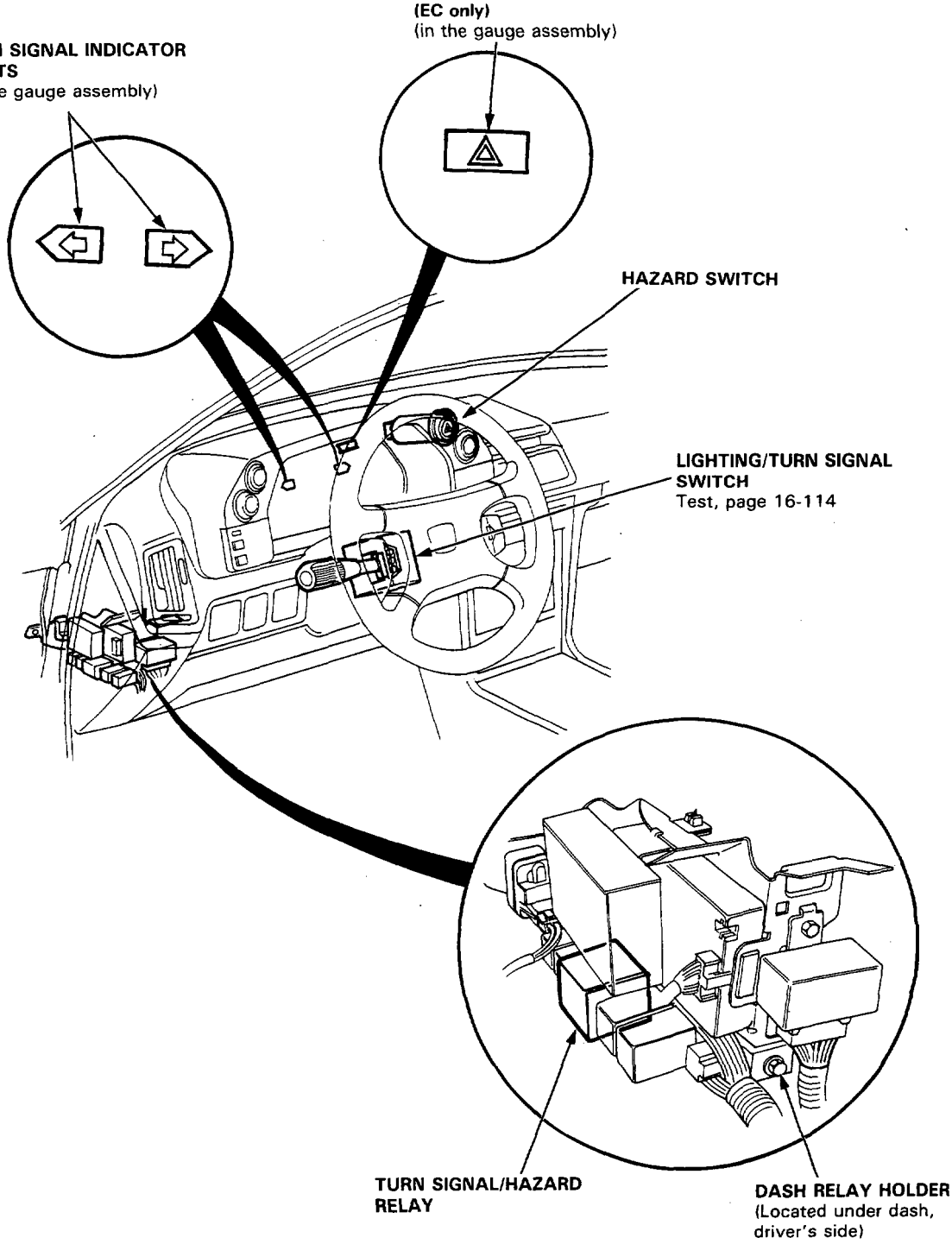

Stereo Sound System

Component Location Index

SRS wire harness is routed near the stereo sound system related parts (SRS wire harness locations, page 16-117).

⚠WARNING All SRS wire harness and connectors are colored yellow.
Do not use electrical test equipment on these circuit.

CAUTION: Be careful not to damage SRS wire harness when servicing the stereo sound system.

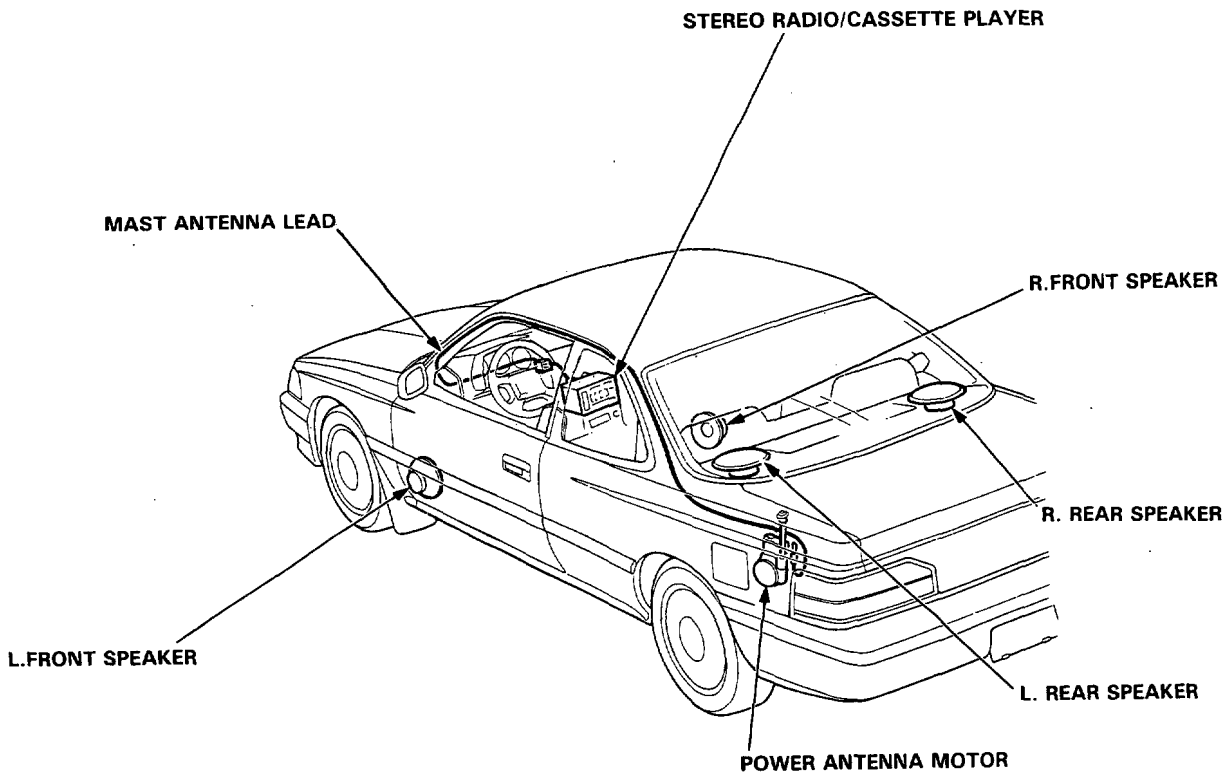

Cigarette Lighter

Component Location Index

SRS wire harness is routed near the cigarette lighter (SRS wire harness locations, page 16-117).

⚠WARNING All SRS wire harness and connectors are colored yellow.
Do not use electrical test equipment on these circuit.

CAUTION: Be careful not to damage SRS wire harness when servicing the cigarette lighter.

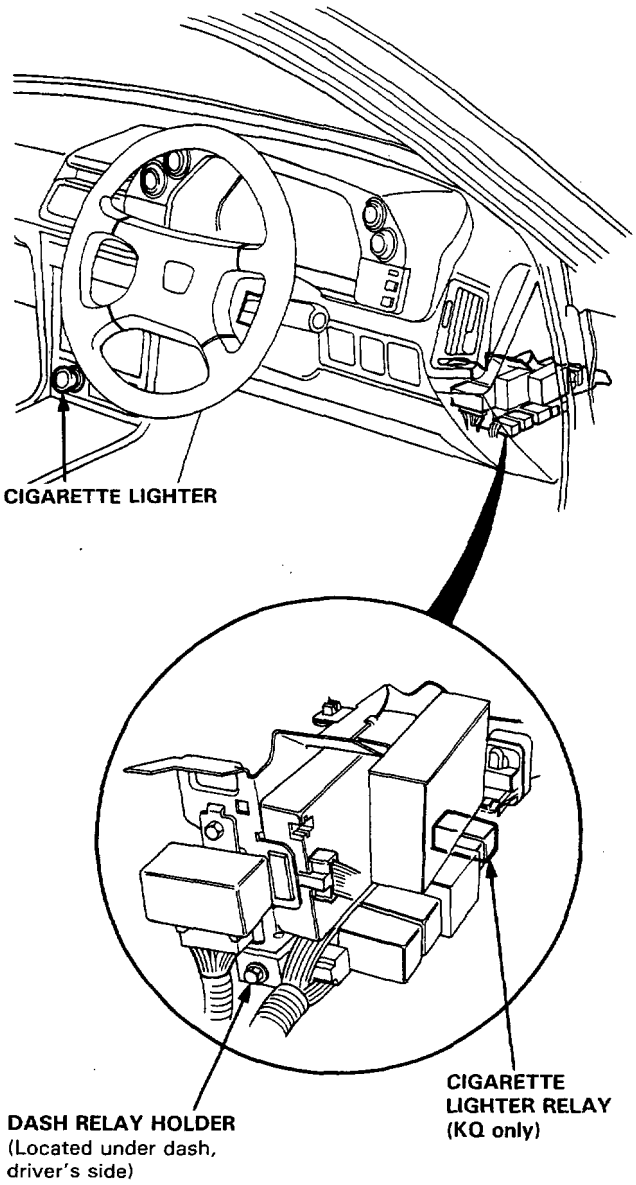

Power Seat (Driver's Seat: Except KQ and KY models)

Component Location Index

* The figure shows LHD. KE model is symmetrical to the figure.

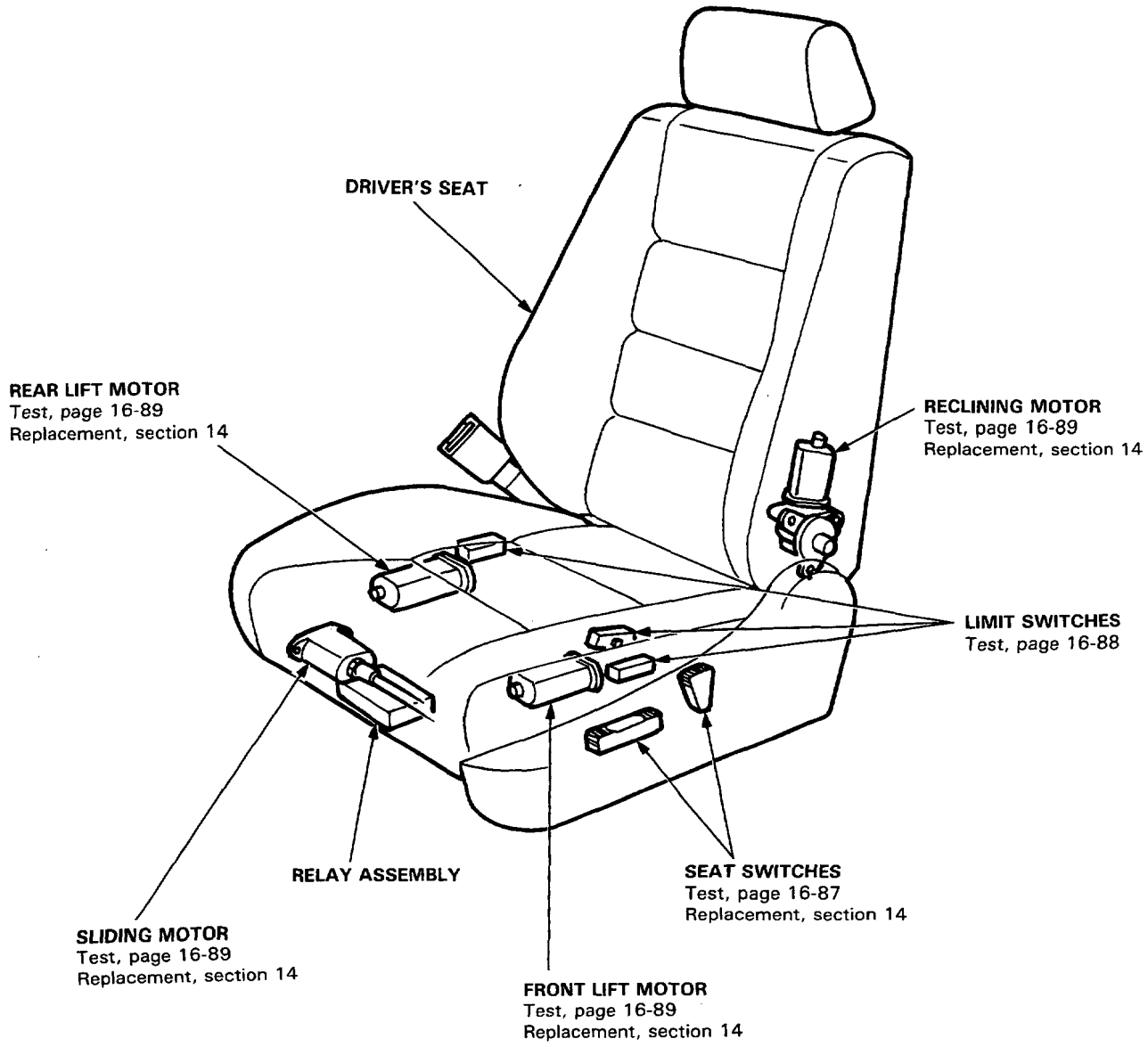

Power Seat (Driver's Seat: Except KQ and KY models)

Circuit Diagram

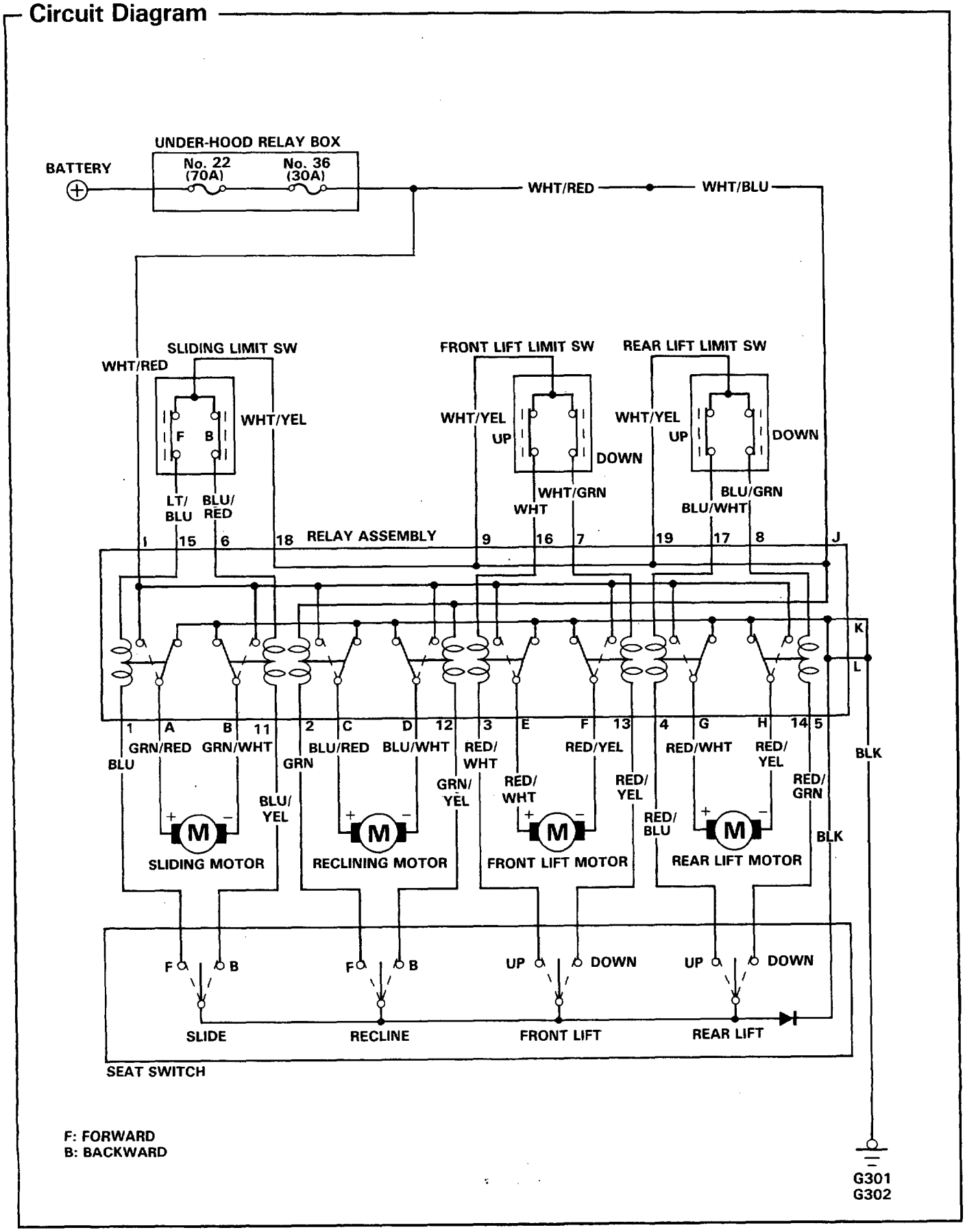

Relay Assembly Terminals

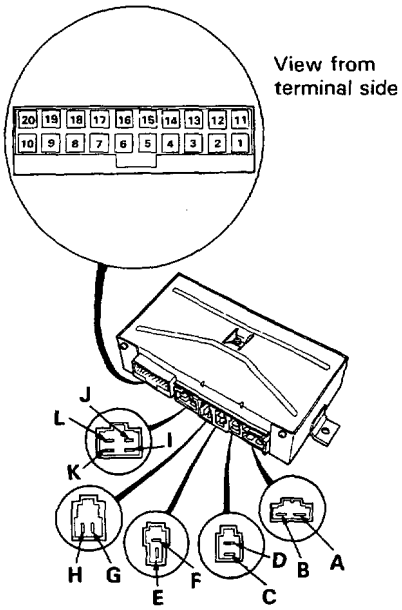

Terminal wire

1	BLU	Slide switch (Forward)
2	GRN	Rec line switch (Forward)
3	RED/WHT	Front lift switch (UP)
4	RED/BLU	Rear lift switch (UP)
5	BLK	Ground
6	BLU/RED	Limit switch for slide (Backward)
7	WHT/GRN	Limit switch for front lift (Down)
8	BLU/GRN	Limit switch for rear lift (Down)
9	WHT/YEL	Limit switch common
10	———	———
11	BLU/YEL	Slide switch (Backward)
12	GRN/YEL	Recline switch (Backward)
13	RED/YEL	Front lift switch (Down)
14	RED/GRN	Rear lift switch (Down)
15	LT BLU	Limit switch for slide (Forward)
16	WHT	Limit switch for front lift (UP)
17	BLU/WHT	Limit switch for rear lift (UP)
18	WHT/YEL	Limit switch common
19	WHT/YEL	Limit switch common
20	———	———
A	GRN/RED	Slide motor (+)
B	GRN/WHT	Slide motor (−)
C	BLU/RED	Reclining motor (+)
D	BLU/WHT	Reclining motor (−)
E	RED/WHT	Front lift motor (+)
F	RED/YEL	Front lift motor (−)
G	RED/WHT	Rear lift motor (+)
H	RED/YEL	Rear lift motor (−)
I	WHT/RED	+B (30A)
J	WHT/BLU	+B (30A)
K	BLK	Ground
L	BLK	Ground

Seat Switch Test

CAUTION: Be careful not to damage the seats, the interior trims or the body.

1. Remove the driver's seat, then disconnect the 20-P connector from the relay assembly.
2. Check for continuity between the terminals in each switch position according to the table.

Position \ Terminal		1	11	2	12	3	13	4	14	5
SLIDE	FOR-WARD	○								○
	BACK-WARD		○							○
RECLINE	FOR-WARD			○						○
	BACK-WARD				○					○
FRONT LIFT	UP					○				○
	DOWN						○			○
REAR LIFT	UP							○		○
	DOWN								○	○

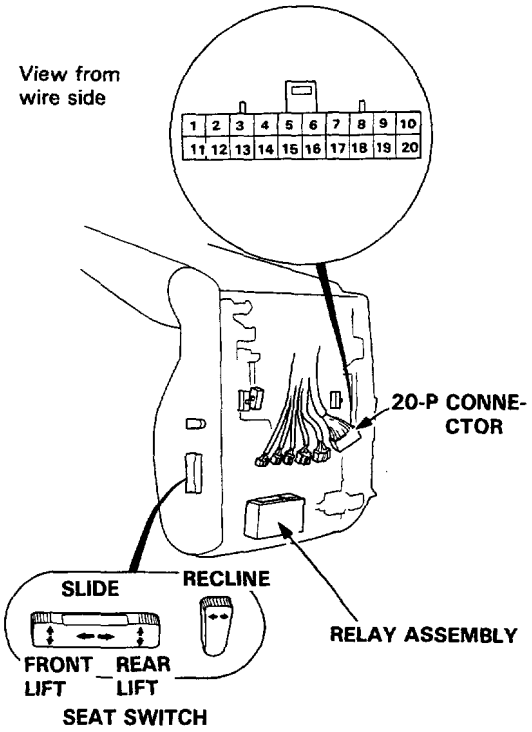

Power Seat (Driver's Seat: Except KQ and KY models)

Limit Switch Test

CAUTION: Be careful not to damage the seats, the interior trims or the body.

1. Remove the driver's seat, then disconnect the 20-P connector from the relay assembly.
2. Check for continuity between the terminals in each switch position according to the table.

View from wire side

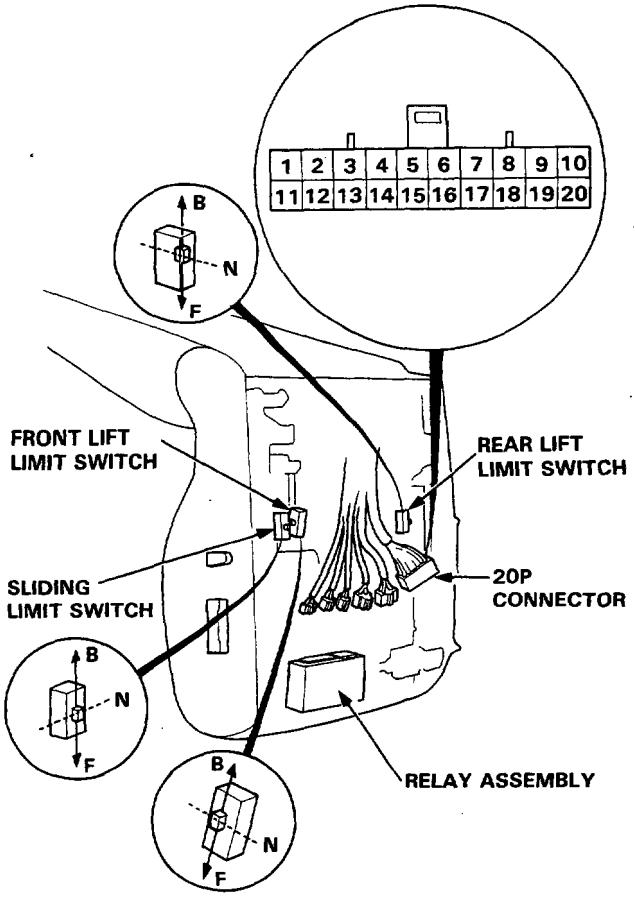

SLIDING LIMIT SWITCH

POSITION \ TERMINAL	15	18	6
F	O—O		
NEUTRAL	O—O	O	O
B		O—O	

FRONT LIFT LIMIT SWITCH

POSITION \ TERMINAL	16	9	7
F	O—O		
NEUTRAL	O—O	O	O
B		O—O	

REAR LIFT LIMIT SWITCH

POSITION \ TERMINAL	17	19	8
F		O—O	
NEUTRAL	O—O	O	O
B	O—O		

NOTE: At fully pushed F and B position, there should be no continuity among above terminals.

Motor Test

CAUTION: Be careful not to damage the seats, the interior trims or the body.

1. Remove the driver's seat, then disconnect the 2-P connector from the relay assembly.

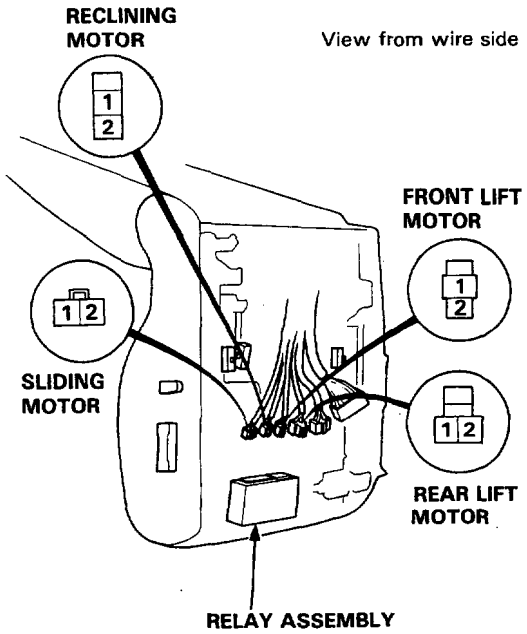

2. Test motor operation:

CAUTION: When a motor stops running, disconnect a battery terminal immediately.

FORWARD SLIDING: Connect battery positive to the No.2 terminal and negative to No.1 terminal.

BACKWARD SLIDING: Connect battery positive to the No.1 terminal and negative to the No.2 terminal.

FORWARD RECLINE: Connect battery positive to the No.2 terminal and negative to the No.1 terminal.

BACKWARD RECLINE: Connect battery positive to the No.1 terminal and negative to the No.2 terminal.

FRONT LIFT (UP): Connect battery positive to the No.2 terminal and negative to the No.1 terminal.

FRONT LIFT (DOWN): Connect battery positive to the No.1 terminal and negative to the No.2 terminal.

REAR LIFT (UP): Connect battery positive to the No.2 terminal and negative to the No.1 terminal.

REAR LIFT (DOWN): Connect battery positive to the No.1 terminal and negative to the No.2 terminal.

NOTE: When a motor does not run, reverse the battery terminal connection. If the motor still does not run, the motor or the wire harness is defective.

Power Seat
(Front Passenger's Seat: KG, KX, KB, KS and KW models)

Component Location Index

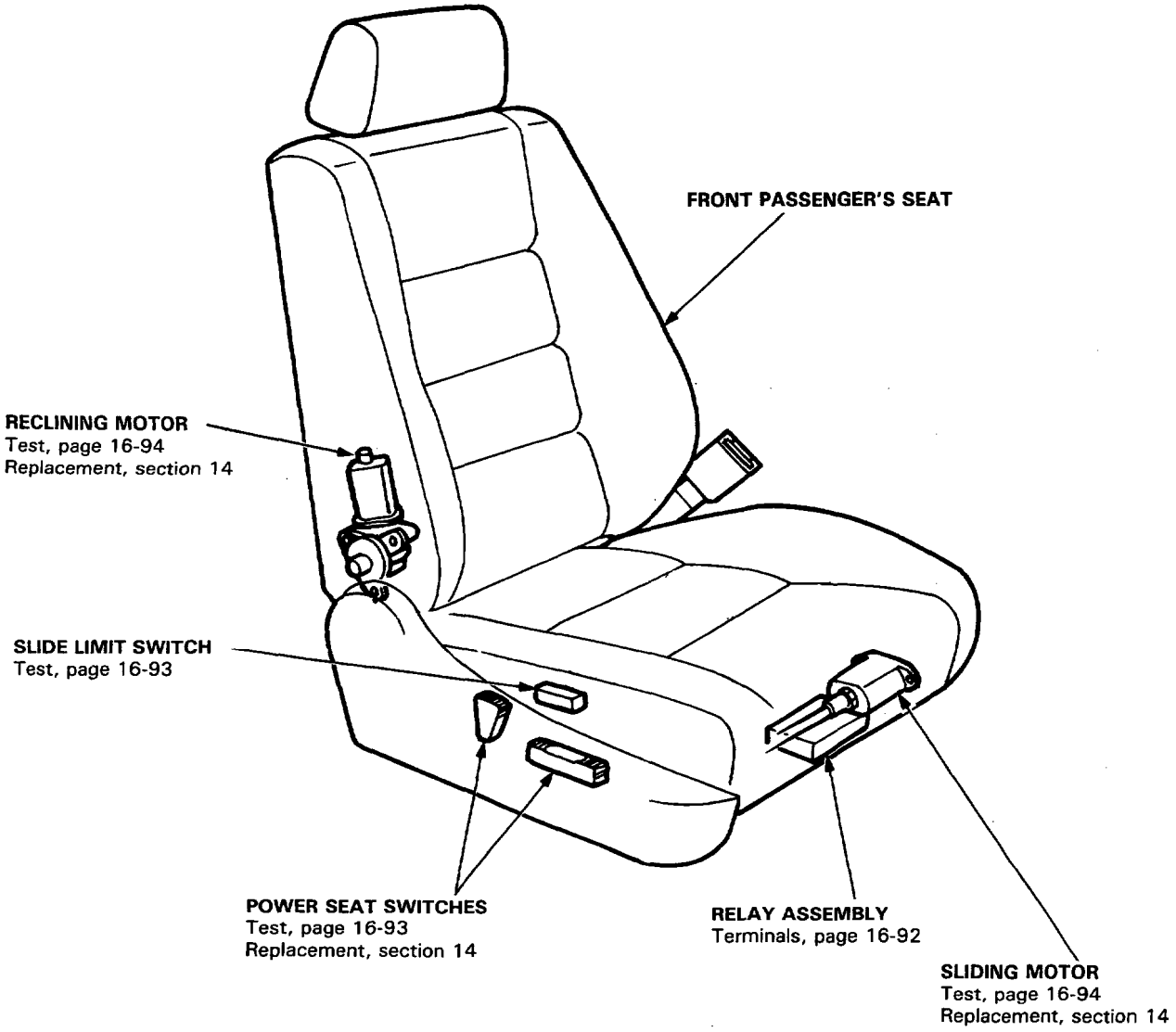

Circuit Diagram

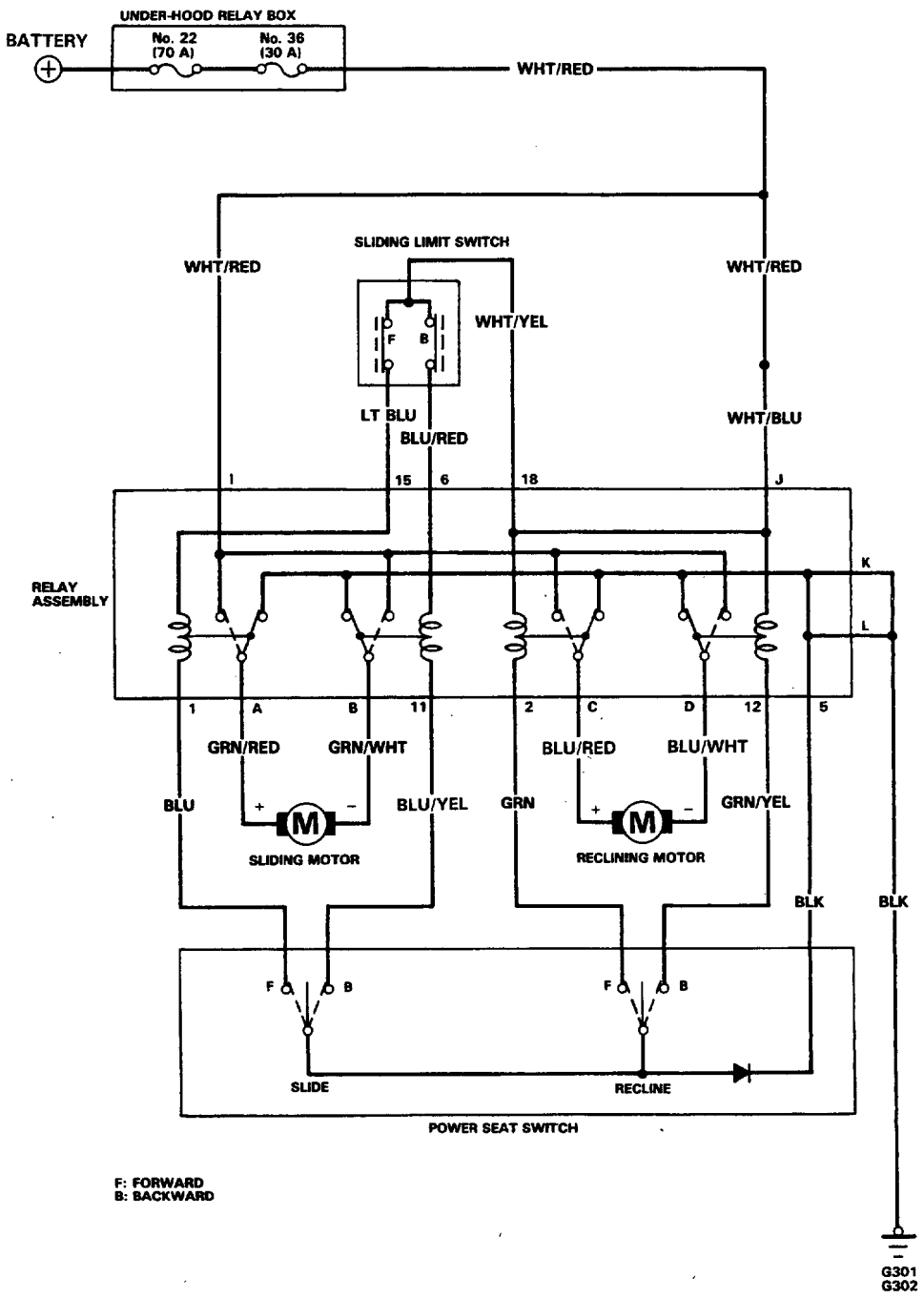

Power Seat
(Front Passenger's Seat: KG, KX, KB, KS and KW models)

Relay Assembly Terminals

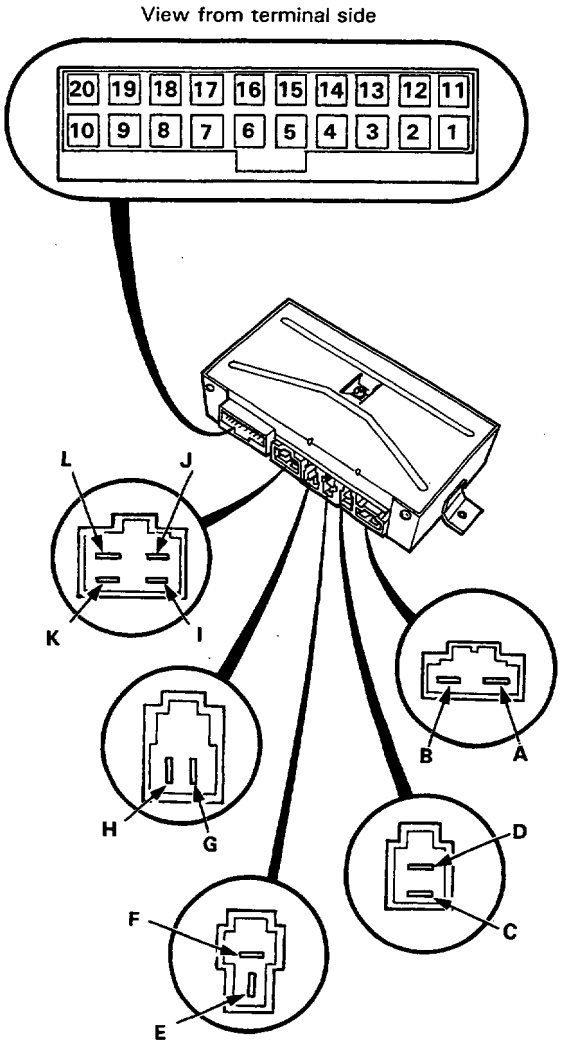

Terminal wire

1	BLU	Slide switch (Forward)
2	GRN	Recline switch (Forward)
3	—	—
4	—	—
5	BLK	Ground
6	BLU/RED	Limit switch for slide (Backward)
7	—	—
8	—	—
9	—	—
10	—	—
11	BLU/YEL	Slide switch (Backward)
12	GRN/YEL	Recline switch (Backward)
13	—	—
14	—	—
15	LT BLU	Limit switch for slide (Forward)
16	—	—
17	—	—
18	WHT/YEL	Limit switch common
19	—	—
20	—	—
A	GRN/RED	Slide motor (+)
B	GRN/WHT	Slide motor (−)
C	BLU/RED	Reclining motor (+)
D	BLU/WHT	Reclining motor (−)
E	—	—
F	—	—
G	—	—
H	—	—
I	WHT/RED	+B (30 A)
J	WHT/BLU	+B (30 A)
K	BLK	Ground
L	BLK	Ground

Seat Switch Test

CAUTION: Be careful not to damage the seats, the interior trims or the body.

1. Remove the driver's seat, then disconnect the 20-P connector from the relay assembly.
2. Check for continuity between the terminals in each switch position according to the table.

Position \ Terminal		1	11	2	12	5
SLIDE	FOR-WARD	○				
	BACK-WARD		○			
RECLINE	FOR-WARD			○		
	BACK-WARD				○	

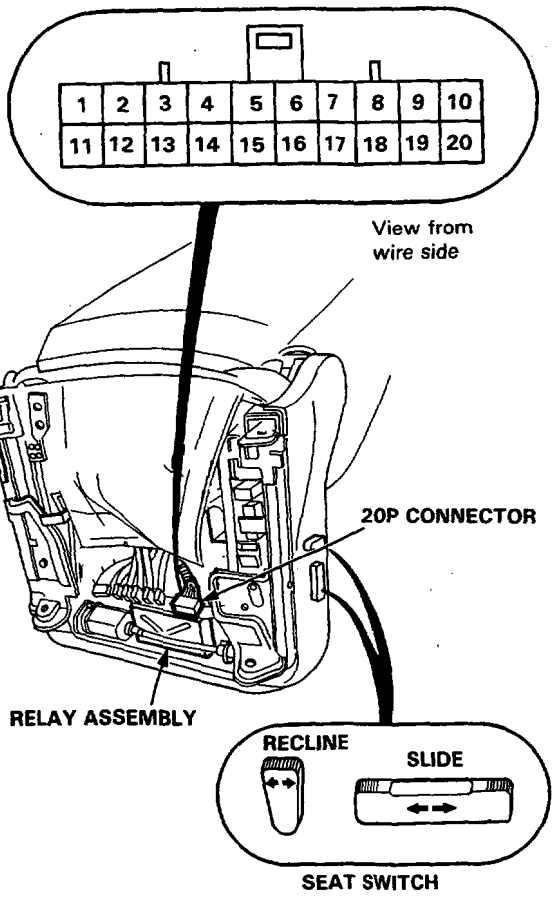

Limit Switch Test

CAUTION: Be careful not to damage the seats, the interior trims or the body.

1. Remove the driver's seat, then disconnect the 20-P connector from the relay assembly.
2. Check for continuity between the terminals in each switch position according to the table.

SLIDING LIMIT SWITCH

POSITION \ TERMINAL	15	18	6
A	○	○	
NEUTRAL	○	○	○
B		○	○

NOTE: At fully pushed A and B position, there should be no continuity among above terminals.

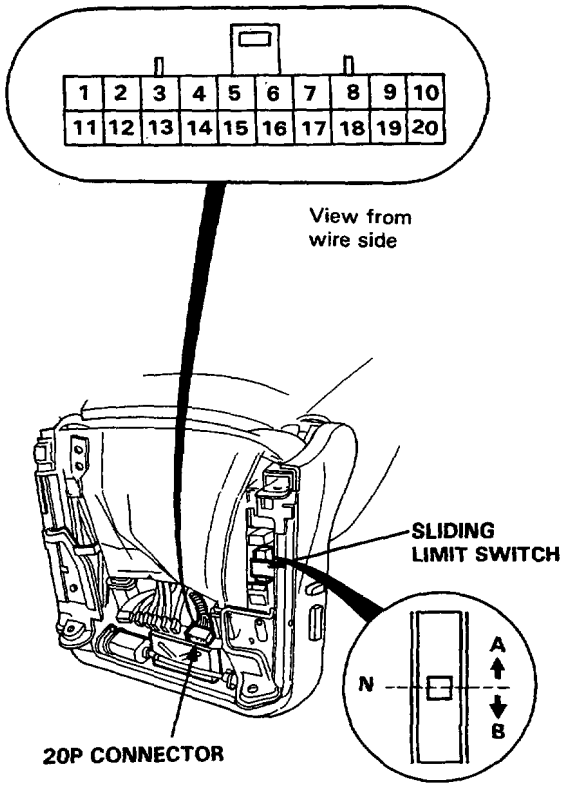

Power Seat
(Front Passenger's Seat: KG, KX, KB, KS and KW models)

Motor Test

CAUTION: Be careful not to damage the seats, the interior trims or the body.

1. Remove the driver's seat, then disconnect the 2-P connector from the relay assembly.

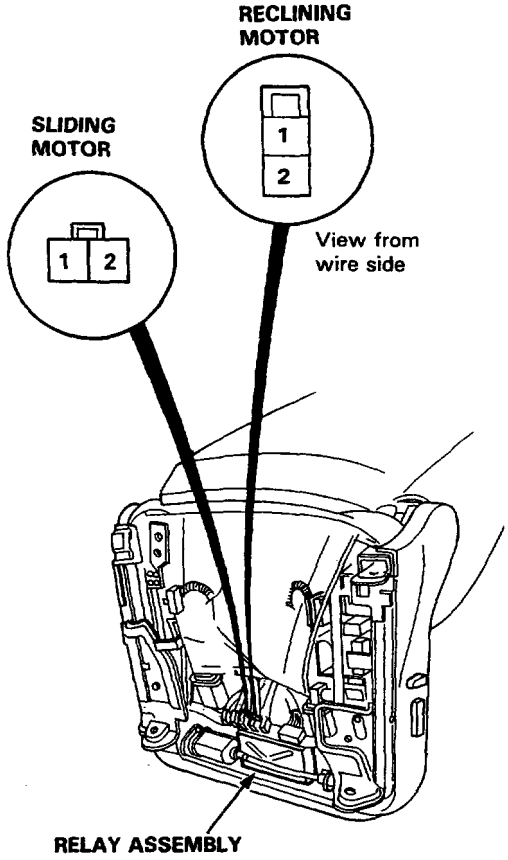

2. Test motor operation:

CAUTION: When a motor stops running, disconnect a battery terminal immediately.

FORWARD SLIDING:	Connect battery positive to the No. 2 terminal and negative to the No. 1 terminal.
BACKWARD SLIDING:	Connect battery positive to the No.1 terminal and negative to the No.2 terminal.
FORWARD RECLINE:	Connect battery positive to the No.2 terminal and negative to the No.1 terminal.
BACKWARD RECLINE:	Connect battery positive to the No.1 terminal and negative to the No.2 terminal.

NOTE: When a motor does not run, reverse the battery terminal connection. If the motor still does not run, the motor or the wire harness is defective.

Power Seat (KQ and KY models)

Component Location Index

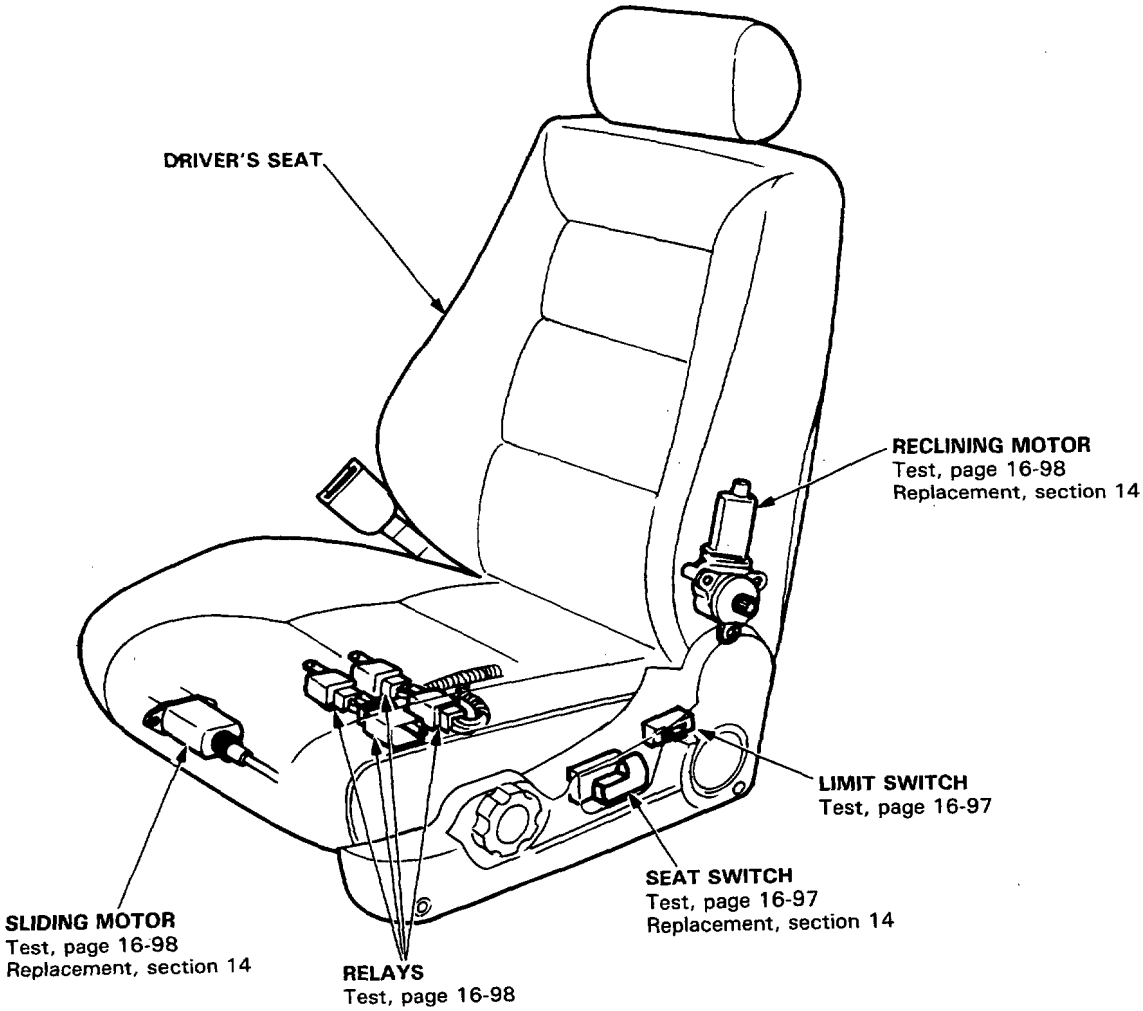

Power Seat (KQ and KY models)

Circuit Diagram

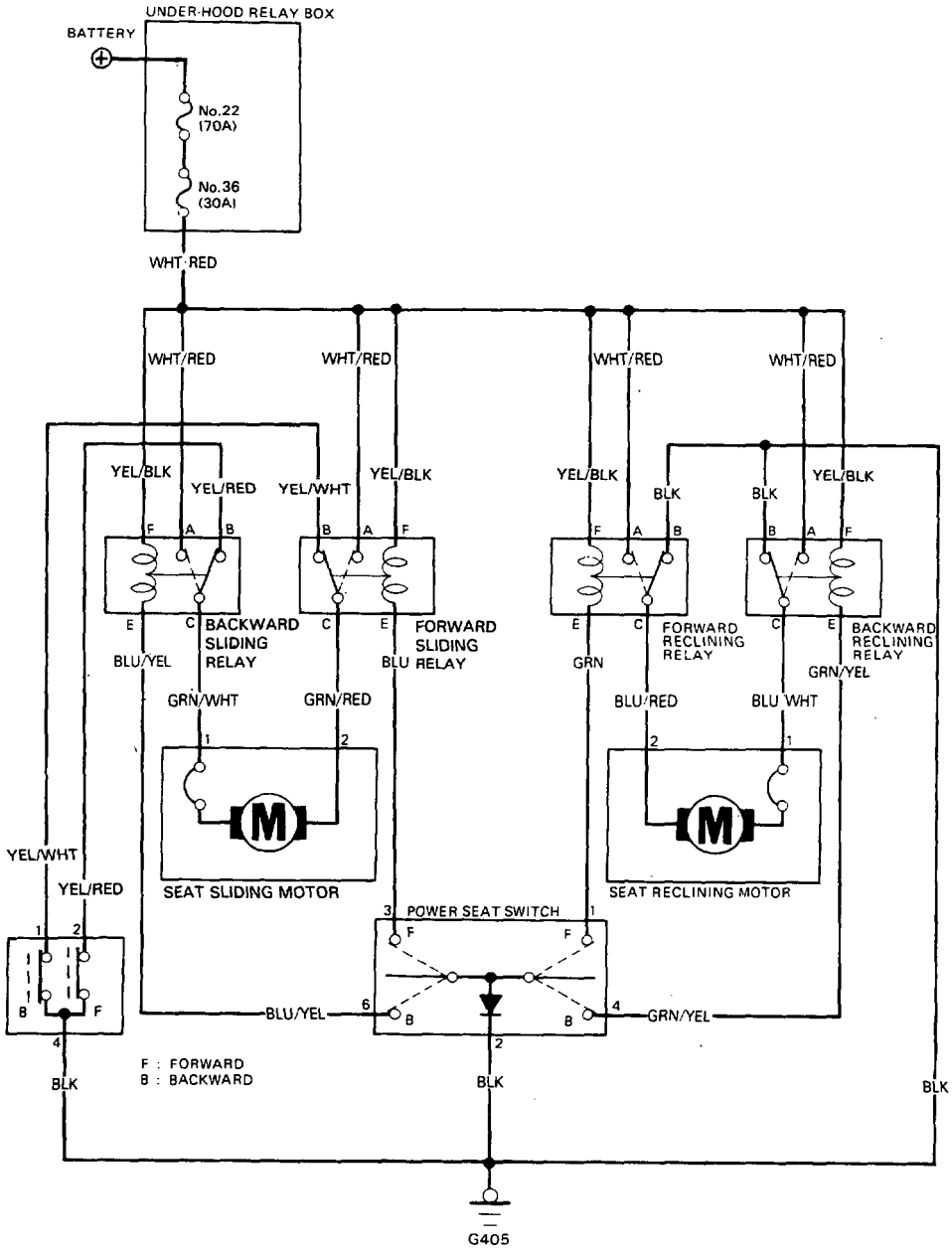

Seat Switch Test

CAUTION: Be careful not to damage the seats, the interior trims or the body.

1. Remove the driver's seat, then disconnect the 6-P connector from the seat switch.
2. Check for continuity between the terminals in each switch position according to the table.

Position \ Terminal	1	4	3	6		2
FORWARD POSITION			○			
BACKWARD POSITION				○	▶|	○
FORWARD RECLINE	○					
BACKWARD RECLINE		○				

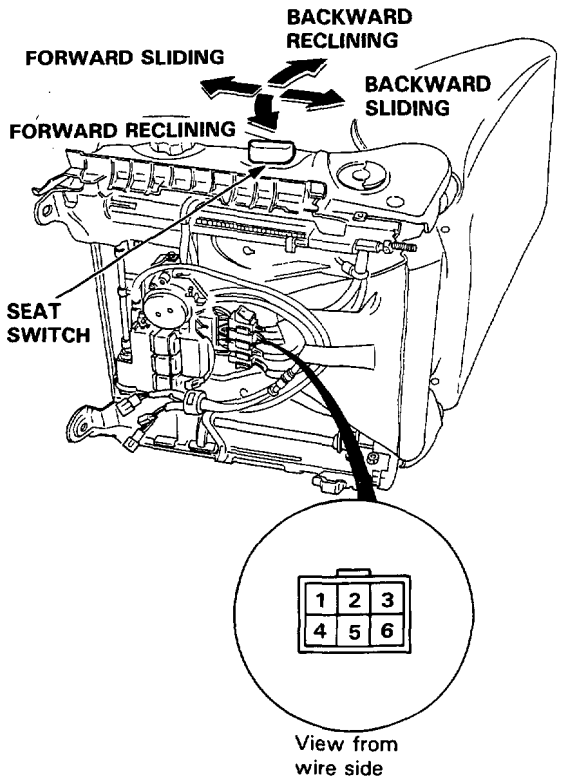

Limit Switch Test

CAUTION: Be careful not to damage the seats, the interior trims or the body.

1. Remove the driver's seat, then disconnect the 4-P connector from the limit switch.
2. Check for continuity between the terminals in each switch position according to the table.

Position \ Terminal	2	4	1
F (OFF at full forward)		○	○
NEUTRAL	○	○	○
B (OFF at full back)	○	○	

NOTE: At fully pushed F and B position, there should be no continuity among above terminals.

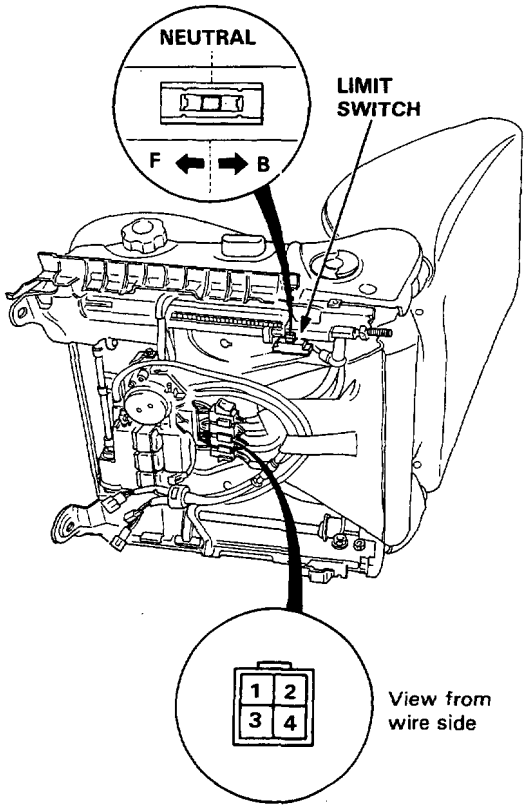

Power Seat (KQ and KY models)

Motor Test

CAUTION: Be careful not to damage the seats, the interior trims or the body.

1. Remove the driver's seat, then disconnect the 2-P connector from the motor.

2. Test motor operation:

   CAUTION: When a motor stops running, disconnect a battery terminal immediately.

   FORWARD
   POSITION: Connect battery positive to the No.2 terminal and negative to No.1 terminal.

   BACKWARD
   POSITION: Connect battery positive to the No.1 terminal and negative to the No.2 terminal.

   FORWARD
   RECLINE: Connect battery positive to the No.2 terminal and negative to the No.1 terminal.

   BACKWARD
   RECLINE: Connect battery positive to the No.1 terminal and negative to the No.2 terminal.

   NOTE: When a motor does not run, reverse the battery terminal connection. If the motor still does not run, the motor or the wire harness is defective.

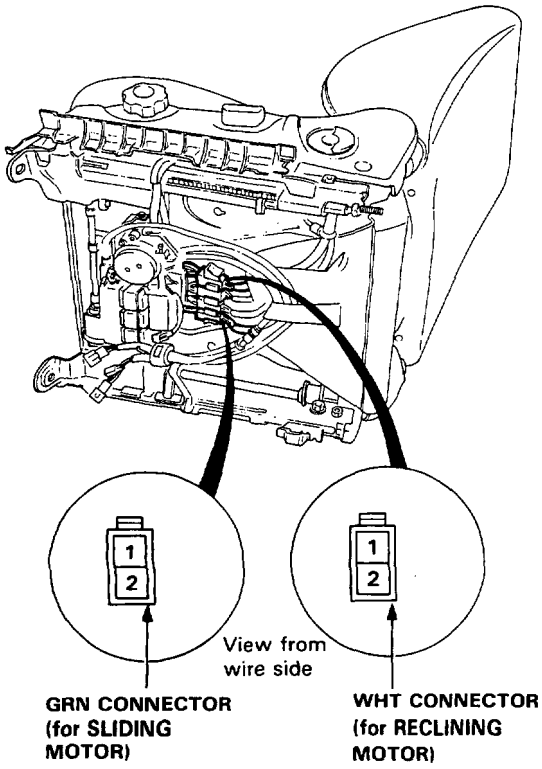

Relay Test

1. Remove the driver's seat, then remove the relay from behind the seat cushion.

2. There should be continuity between the A and C terminals when the battery is connected to the E and F terminals.
   There should be continuity between the B and C terminals when the battery is disconnected.

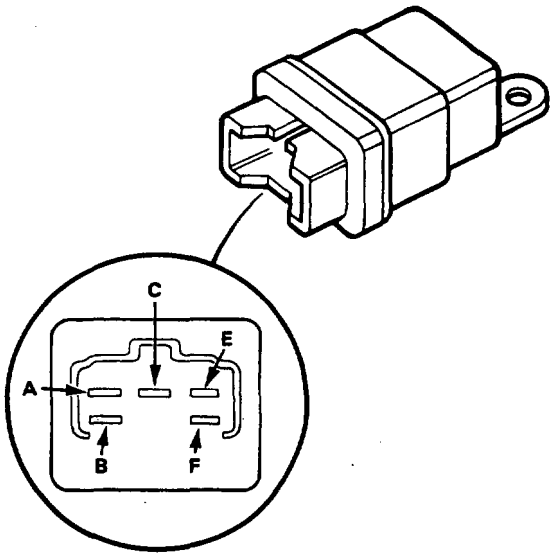

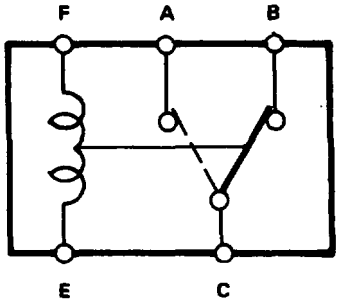

Seat Heaters (KG, KX, KS and KW models)

Component Location Index

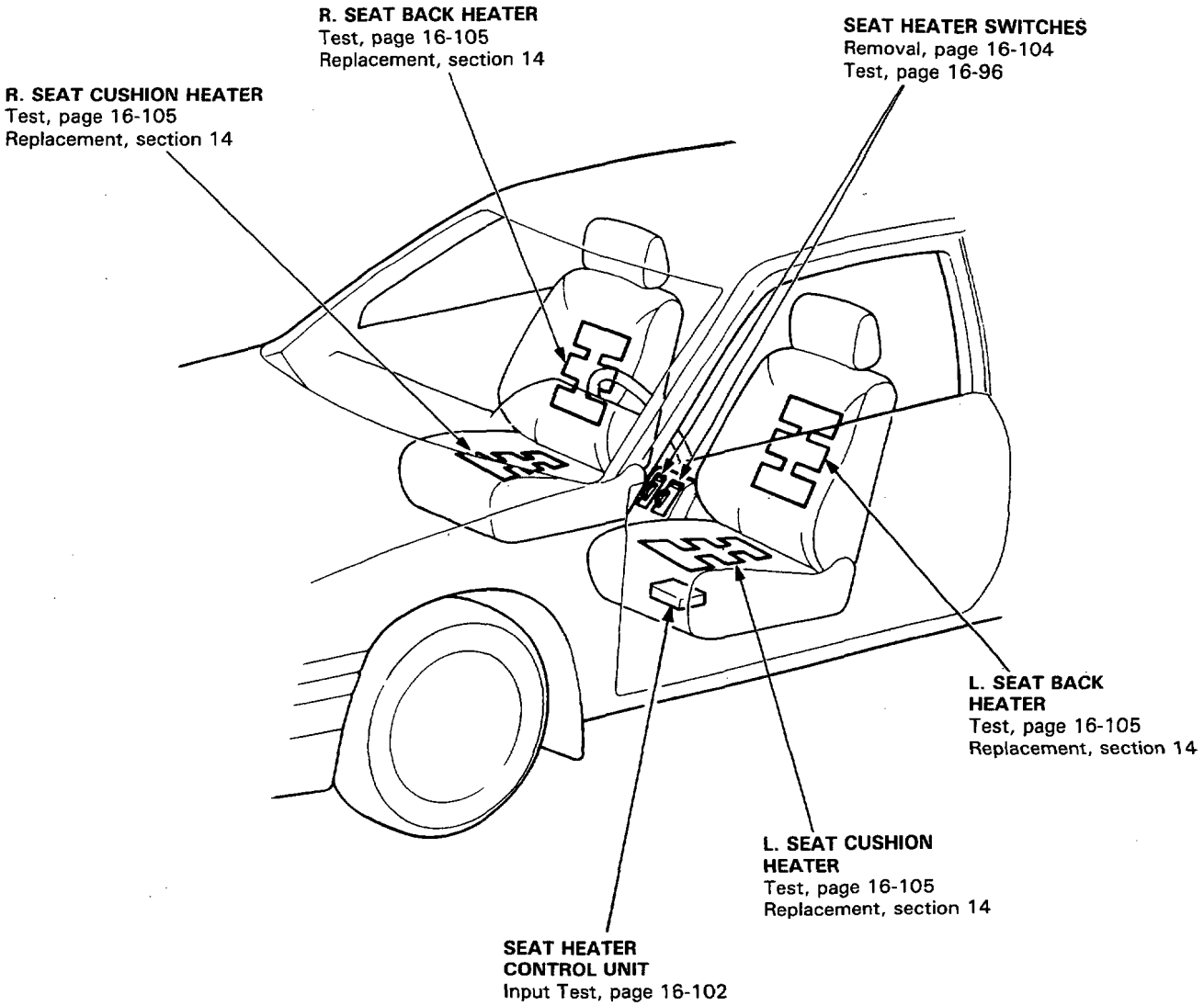

Description

Two heaters are provided in each front seat; one in the seat cushion and one in the seat back. Each heater allows any desired temperature between 29°C and 34°C (84°F and 93°F) by rotating the adjusting dial located on the center console.

The heater in the seat cushion uses a temperature-dependent diode (thermistor) to measure differences in the seat temperatures. The use of the thermistor and transistors in the control unit combine to offer an accurate temperature control.

Seat Heaters (KG, KX, KS and KW models)

Circuit Diagram

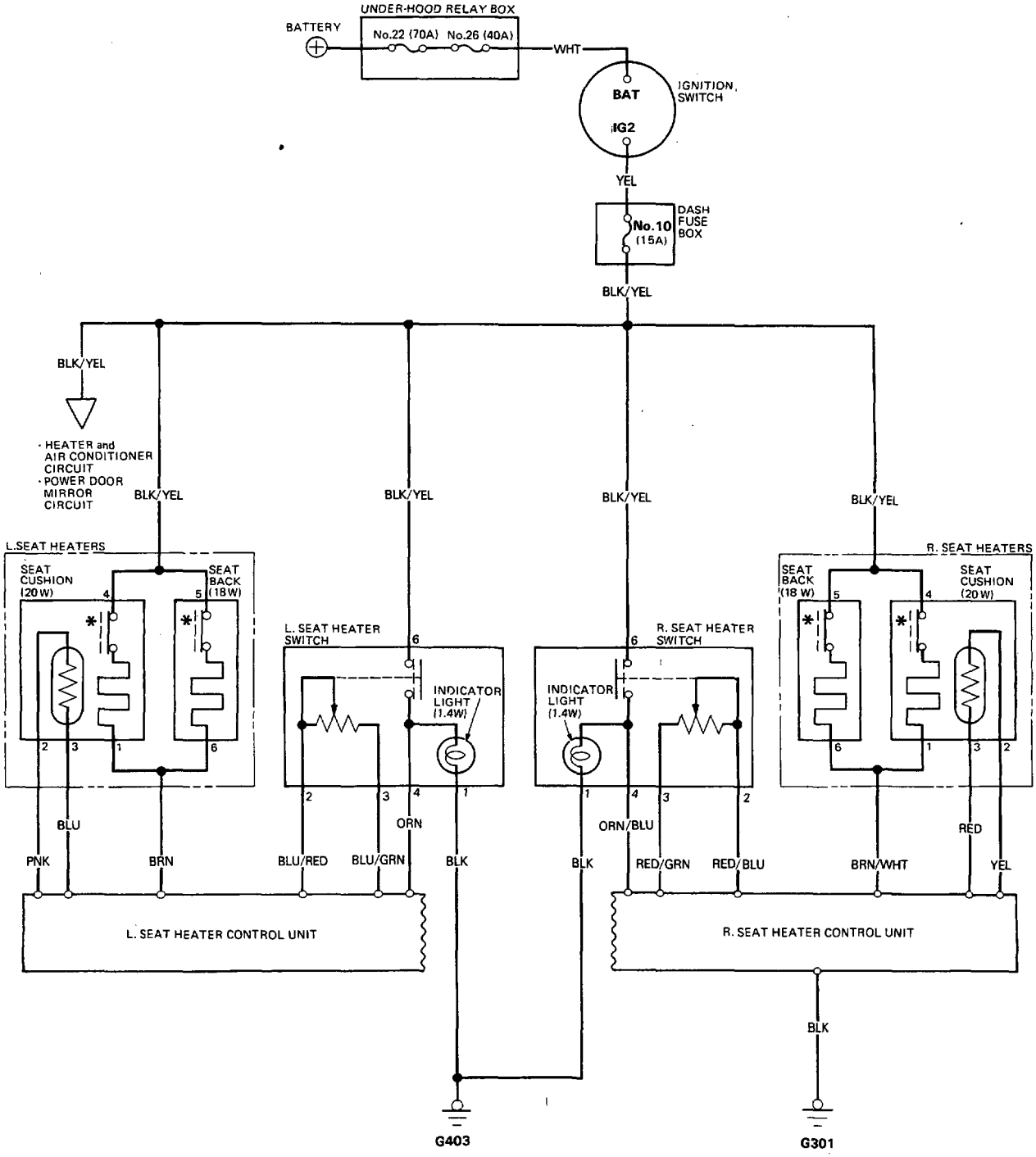

*: BREAKER [OFF above 70°C (158°F)/ON below 40°C (104°F)]

Troubleshooting

NOTE: The numbers in the table show the troubleshooting sequence.

Symptom \ Item to be inspected		Blown No. 10 (15 A) fuse (in the dash fuse box)	Blown indicator light bulb	Seat heater switch	Seat heater	Thermistor (in the seat cushion heater)	Control unit input	Poor ground	Open circuit in wires or loose or disconnected terminals
Seat heaters operate, but indicator light does not go on.			1					G403	
Seat heaters do not operate and indicator light does not go on.		1		2				G403	BLK/YEL
Seat heaters do not operate, but indicator light goes on.	Left seat						1	G301	BLK/YEL, BRN or ORN
	Right seat						1		BLK/YEL, BRN/WHT or ORN/BLU
Seat cushion heater or seat back heater does not operate, but indicator light goes on.					1				
Seat heaters can be adjusted.	Left seat			1		2	3		BLU/GRN, BLU/RED, PNK or BLU
	Right seat			1		2	3		RED/GRN, RED/BLU, YEL or RED

Seat Heaters (KG, KX, KS and KW models)

Control Unit Input Test

Remove the driver's seat, then disconnect the 13-P connector from the control unit.
Make the following input tests at the harness pins.

NOTE: Recheck connection between the 13-P connector and the control unit, and between the 4-P connector and the seat heaters, then replace the control unit if all input tests and seat heater test prove OK.

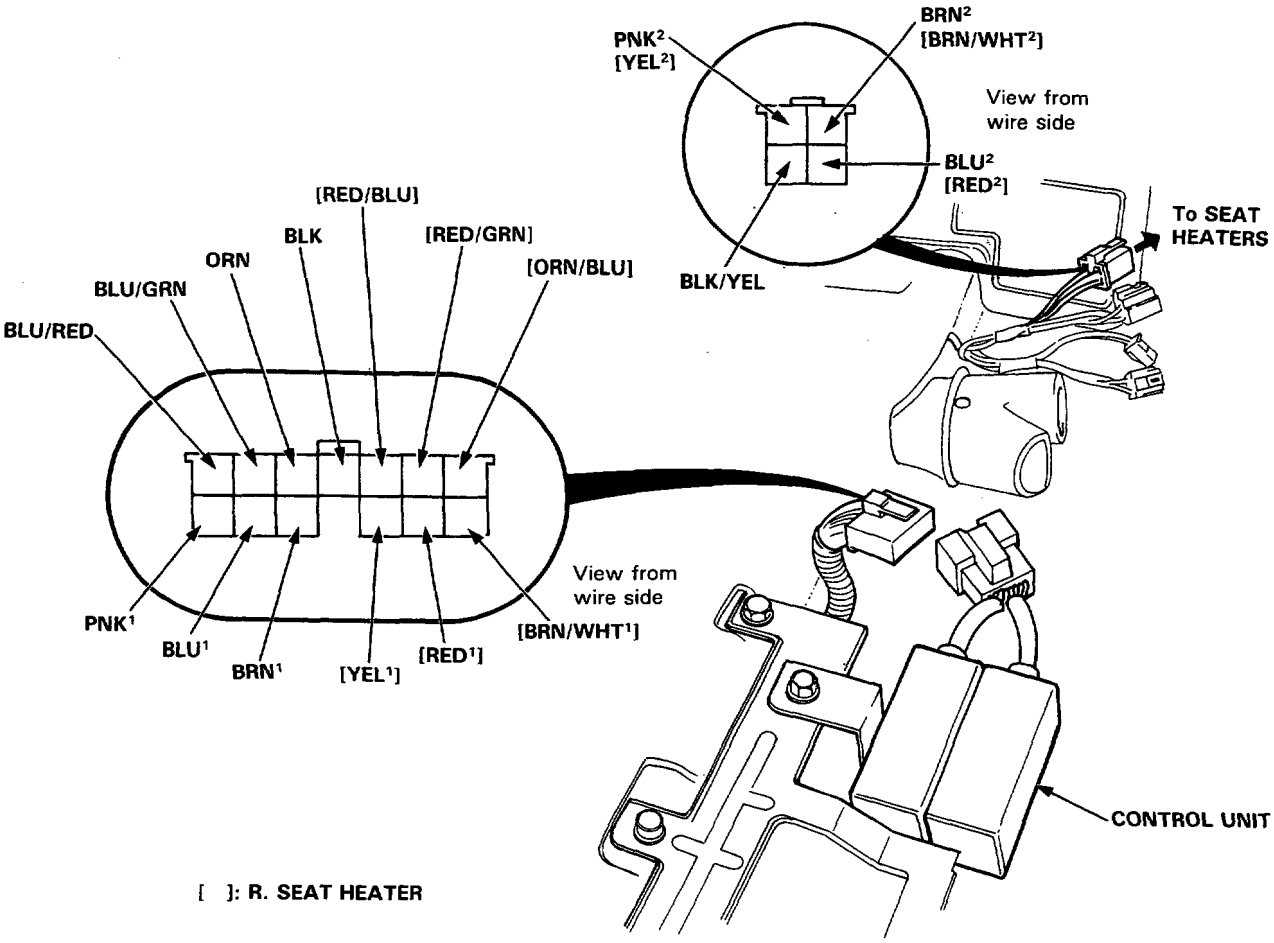

No.	Wire	Test condition	Test: desired result	Possible cause (if result is not obtained)
1	BLK	Under all conditions.	Check for continuity to ground: should be continuity.	• Poor ground (G403). • An open in the wire.
2	ORN [ORN/BLU]	Ignition switch ON and seat heater switch clicked into ON.	Check for voltage to ground: should be battery voltage.	• Blown No. 10 (15A) fuse. • Faulty seat heater (ON/OFF) switch. • An open in the wire.
3	BLU/GRN and BLU/RED [RED/GRN and RED/BLU]	Adjusting dial rotated.	Check for resistance between the BLU/GRN [RED/GRN] and BLU/RED [RED/BLU] terminals. should vary from 0 to 10,000 ohms as the dial is rotated.	• Faulty seat heater (variable) switch. • An open in the wire.
4	BLK/YEL	Ignition switch ON.	Check for voltage to ground: should be battery voltage.	• An open in the wire.
5	PNK [YEL] • BLU [RED] • BRN [BRN/WHT]	Under all conditions.	Check for continuity between the terminals. There should be continuity: • Between the PNK[1] [YEL[1]] and PNK[2] [YEL[2]] terminals. • Between the BLU[1] [RED[1]] and BLU[2] [RED[2]] terminals. • Between the BRN[1] [BRN/WHT[1]] and BRN[2] [BRN/WHT[2]] terminals	• An open in the wire.
6	Test the seat heaters (see page 16-105)			

Seat Heaters (KG, KX, KS and KW models)

Switch Removal

1. Remove the center console.
2. Disconnect the 6-P connector to remove the switch, then push the switch behind the console.

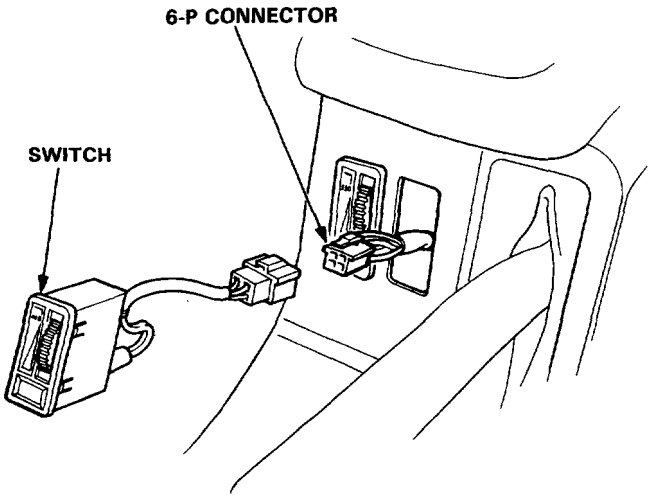

3. Turn the socket 45° counterclockwise to remove it.

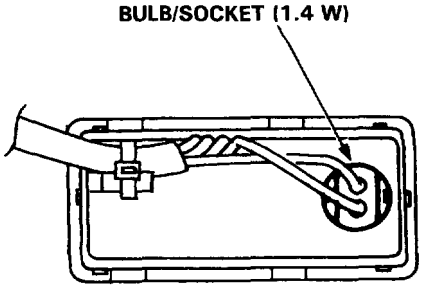

Switch Test

1. Remove the seat heater switch from the center console.
2. There should be continuity between the No. 4 and No. 6 terminals when the switch is clicked into ON. There should be no continuity when the switch is clicked into OFF.

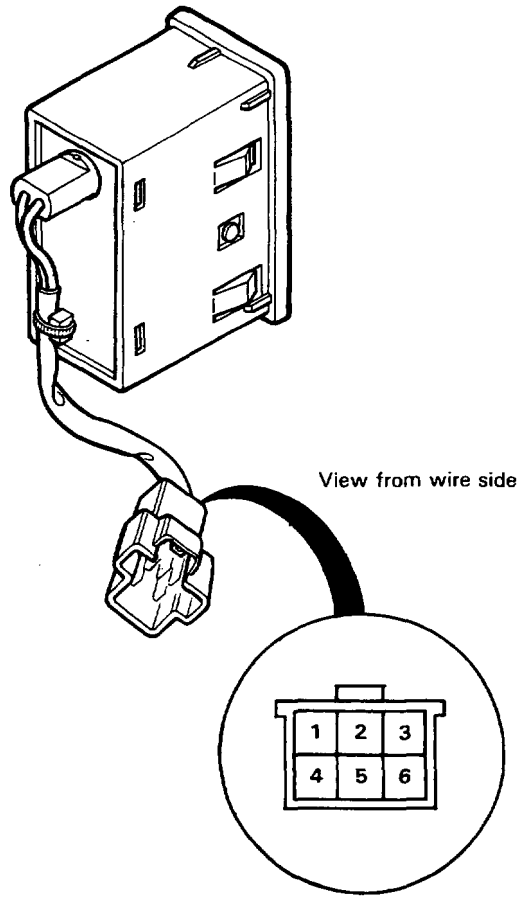

3. Measure resistance between the No. 2 and No. 3 terminals while rotating the adjusting dial. Resistance should vary from 0 to 10,000 ohms as the dial is rotated.

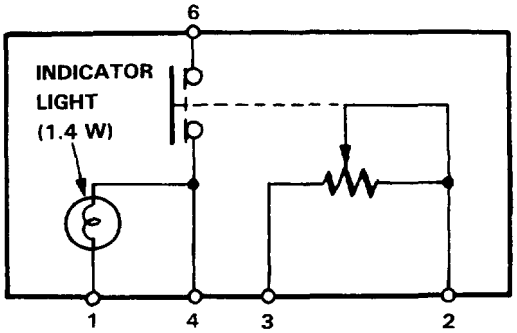

Heater Test

1. Slide the seat forward to disconnect the 4-P connector from the seat cushion heater, and the 2-P connector from the seat back heater.

   NOTE: Left front seat shown, right front seat similar.

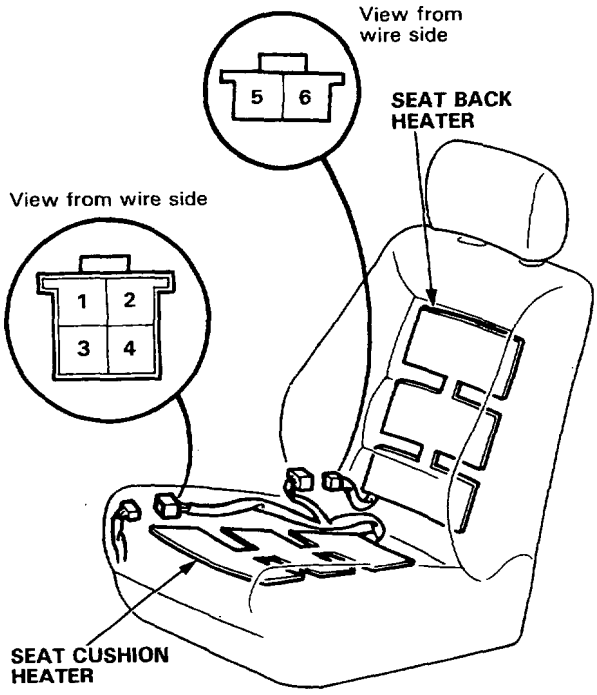

2. Check for continuity between the No. 1 and No. 4 terminals, and between the No. 5 and No. 6 terminals. ($RX10^3$ scale)
   There should be continuity.

3. Using an ohmmeter ($RX10^3$ scale), measure resistance between the No. 2 and No. 3 terminals. Replace the seat cushion heater if the resistance is not within specifications.

   NOTE: Resistance will vary with the thermistor temperature; specifications are at 25°C (77°F) or more.

   Thermistor Resistance: 8 kΩ or less.

Supplemental Restraint System

Warning/Caution Labels 16-108
General Precautions 16-110
Airbag Assembly 16-110
Steering 16-111
Sensor Inspection 16-112
Wiring 16-112
Component Location Index 16-114
Description 16-115
Circuit Diagram 16-116
Wiring Locations 16-117
Troubleshooting 16-118
Front Sensors Removal 16-128
Front Sensors Installation 16-130
SRS Unit Assembly Removal 16-131
SRS Unit Assembly Installation 16-132

Ref. No.	Tool Number	Description	Q'ty	Remarks
①	07HAZ–SG00100	SRS Test Harness A	1	
②	07HAZ–SG00200	SRS Test Harness B	1	
③	07HAZ–SG00300	SRS Test Harness C	1	

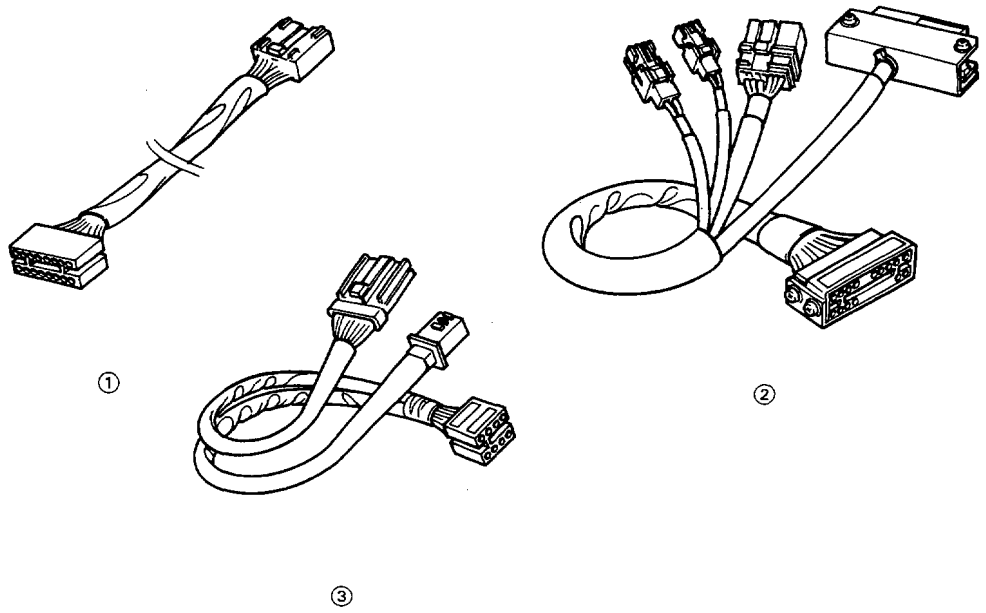

Supplemental Restraint System (SRS)

Warning/Caution Labels

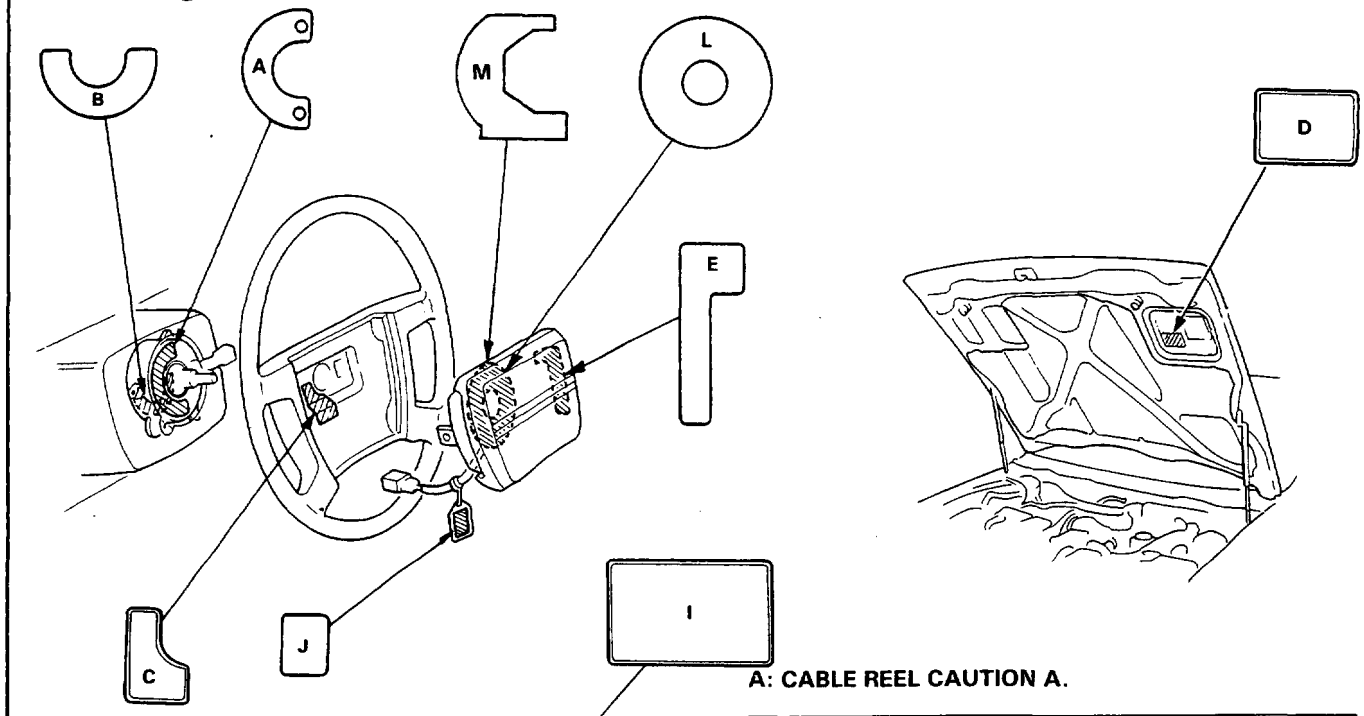

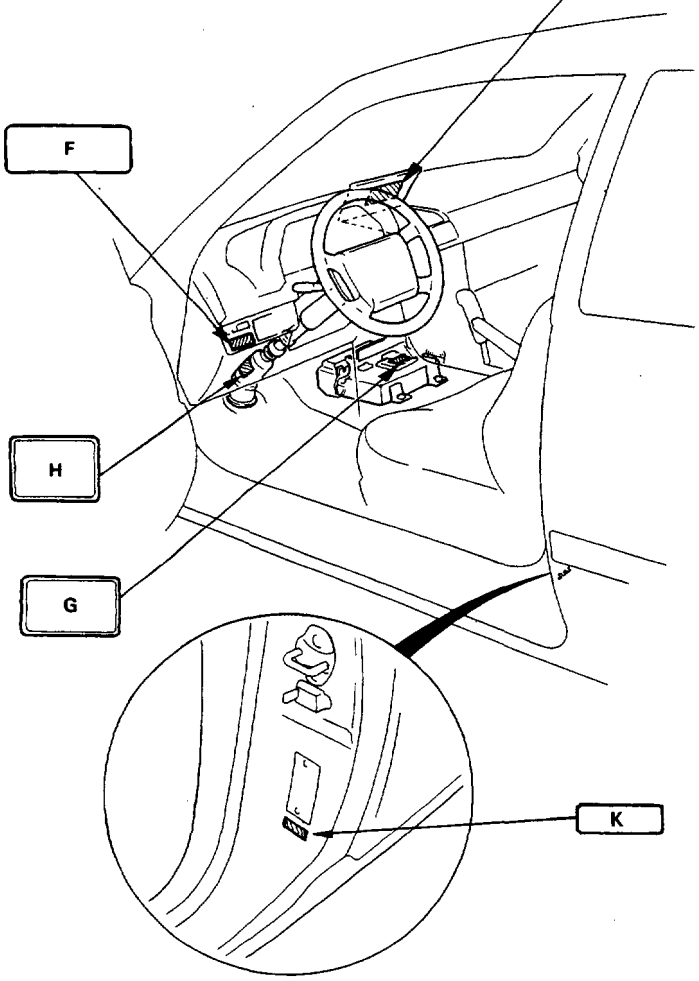

A: CABLE REEL CAUTION A.

CAUTION: SRS BEFORE INSTALLING CABLE REEL ● CENTER THE FRONT WHEELS. ● ALIGN THE MARKS. ● READ SERVICE MANUAL.

B: CABLE REEL CAUTION B.

CAUTION: SRS NO SERVICEABLE PARTS INSIDE; DO NOT DISASSEMBLE OR TAMPER.

C: STEERING WHEEL WARNING

WARNING: SRS BEFORE INSTALLING STEERING WHEEL: ● CENTER THE FRONT WHEELS. ● ALIGN THE MARKS. (CABLE REEL) ● READ SERVICE MANUAL.

D: BULKHEAD WARNING

WARNING SRS THIS VEHICLE IS EQUIPPED WITH A DRIVER AIRBAG AS A SUPPLEMENTAL RESTRAINT SYSTEM. (SRS) ALL S.R.S. ELECTRICAL WIRING AND CONNECTORS ARE COLORED YELLOW. DO NOT USE ELECTRICAL TEST EQUIPMENT ON THESE CIRCUITS. TAMPERING WITH OR DISCONNECTING THE S.R.S. WIRING COULD RESULT IN ACCIDENTAL FIRING OF THE INFLATOR OR MAKE THE SYSTEM INOPERATIVE, WHICH MAY RESULT IN SERIOUS INJURY.

E: MODULE WARNING

WARNING SRS
TO PREVENT ACCIDENTAL DEPLOYMENT AND POSSIBLE INJURY:
ALWAYS INSTALL THE PROTECTIVE SHORT CONNECTOR ON THE INFLATOR CONNECTOR WHEN THE HARNESS IS DISCONNECTED.
UNDER NO CIRCUMSTANCES SHOULD DIAGNOSIS BE PERFORMED USING ELECTRICAL TEST EQUIPMENT OR PROBING DEVICES.
NO SERVICEABLE PARTS INSIDE. DO NOT DISASSEMBLE OR TAMPER.
STORE THE REMOVED AIRBAG ASSEMBLY WITH THE PAD SURFACE UP.
FOR SPECIAL HANDING OR STORAGE REFER TO THE HONDA SERVICE MANUAL.
DISPOSE OF THE ENTIRE UNIT AS DIRECTED.

F: DRIVER INFORMATION

SRS ALWAYS WEAR YOUR SEAT BELT.
- THIS CAR IS EQUIPPED WITH A DRIVER AIRBAG AS A SUPPLEMENTAL RESTRAINT SYSTEM (S.R.S.).
- IT IS DESIGNED TO SUPPLEMENT THE SEAT BELT.

G: SRS UNIT CAUTION

CAUTION SRS
- **NO SERVICEABLE PARTS INSIDE.**
- **DO NOT DISASSEMBLE OR TAMPER.**
- DO NOT DROP.
- **STORE IN A CLEAN, DRY AREA.**

H: STEERING COLUMN CAUTION

CAUTION SRS
TO AVOID DAMAGING THE S.R.S. CABLE OR REEL, WHICH COULD MAKE THE SYSTEM INOPERATIVE, REMOVE THE STEERING WHEEL BEFORE REMOVING THE STEERING SHAFT CONNECTOR BOLT.

I: POCKET INFORMATION

DRIVER'S AIRBAG INFORMATION SRS
- SUPPLEMENTAL RESTRAINT SYSTEM (SRS) CAN PROVIDE ADDITIONAL PROTECTION FOR THE DRIVER IN A FRONTAL COLLISION. A FUNCTIONAL DESCRIPTION OF THE SRS IS IN YOUR OWNER'S MANUAL.
- THE SYSTEM MUST BE INSPECTED TEN YEARS AFTER DATE OF MANUFACTURE, AS NOTED ON THE CERTIFICATION PLATE.
- ANY REPAIR, INSPECTION OR NEARBY ACCESSORY INSTALLATION SHOULD BE DONE BY AN HONDA DEALER.
- IF YOUR SRS INDICATOR:
  - LIGHTS WHILE DRIVING OR FLASHES;
  FAILS TO LIGHT OR STAYS ON AFTER THE IGNITION IS FIRST TURNED ON:
  SEE YOUR AUTHORIZED HONDA DEALER.

J: STEERING WHEEL WARNING

WARNING SRS
TO PREVENT ACCIDENTAL DEPLOYMENT AND POSSIBLE INJURY:
ALWAYS INSTALL THE PROTECTIVE SHORT CONNECTOR ON THE INFLATOR CONNECTOR WHEN THE HARNESS IS DISCONNECTED.

K: LABEL AIRBAG

L: INFLATOR LABEL

DANGER POISON
KEEP OUT OF THE REACH OF CHILDREN
CONTAINS SODIUM AZIDE AND POTASSIUM NITRATE. CONTENTS ARE POISONOUS AND EXTREMELY FLAMMABLE. CONTACT WITH ACID, WATER, OR HEAVY METALS MAY PRODUCE HARMFUL AND IRRITATING GASES OR EXPLOSIVE COMPOUNDS. DO NOT DISMANTLE, INCINERATE OR BRING INTO CONTACT WITH ELECTRICITY OR STORE AT TEMPERATURES EXCEEDING 93°C (200°F).
FIRST AID: IF CONTENTS ARE SWALLOWED INDUCE VOMITING.
- FOR EYE CONTACT, FLUSH EYES WITH WATER FOR 15 MINUTES.
- IF GASES FROM ACID OR WATER CONTACT ARE INHALED, SEEK FRESH AIR. IN EVERY CASE, GET PROMPT MEDICAL ATTENTION.

M: INFLATOR COVER LABEL

DANGER SRS
EXPLOSIVE/FLAMMABLE
CONTACT WITH ACID, WATER, OR HEAVY METALS SUCH AS COPPER, LEAD, OR MERCURY, MAY PRODUCE HARMFUL AND IRRITATING GASES OR EXPLOSIVE COMPOUNDS. STORAGE TEMPERATURES MUST NOT EXCEED 93°C (200°F). FOR PROPER HANDLING, STORAGE, AND DISPOSAL PROCEDURES REFER TO THE HONDA SERVICE MANUAL.

POISON
CONTAINS POISONOUS SODIUM AZIDE AND POTASSIUM NITRATE.
FIRST AID:
IF CONTENTS ARE SWALLOWED, INDUCE VOMITING. FOR EYE CONTACT, FLUSH EYES WITH WATER FOR 15 MINUTES. IF GASES (FROM ACID OR WATER CONTACT) ARE INHALED, SEEK FRESH AIR. IN EVERY CASE, GET PROMPT MEDICAL ATTENTION.
KEEP OUT OF REACH OF CHILDREN.

Supplemental Restraint System (SRS)

General Precautions

1. Carefully inspect any SRS part before installing. Do not install any part that shows signs of being dropped or improperly handled, such as dents, cracks or deformation:

   - Airbag assy.
   - Front sensors.
   - Cable reel.
   - SRS unit

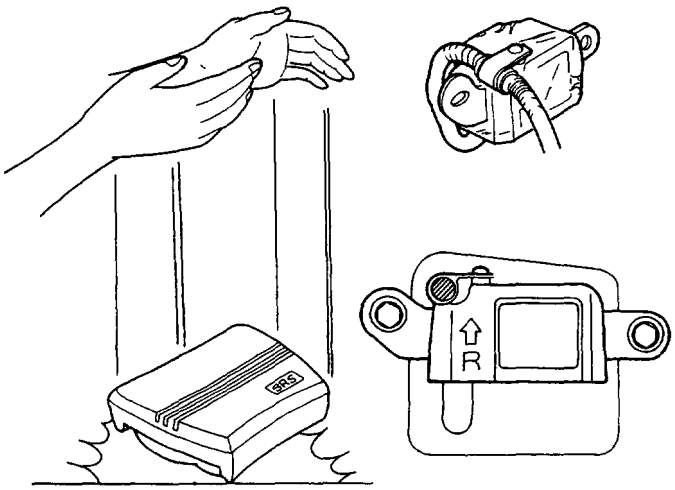

2. Use only the digital multimeter to check the system. If using an analog circuit tester, it may cause an accidental deployment and possible injury.
3. Do not install used SRS parts from another car.When repairing, use only new SRS parts.
4. Except when performing electrical inspections, always disconnect both the negative cable and positive cable at the battery before begining work.
5. Replacement of the lighting and wiper combination switches and cruise control switch can be done without removing the steering wheel:

   - Lighting and wiper combination switch replacement, see page 16-70.
   - Cruise control switch replacement, see page 16-80.

Airbag Assembly

Do not try to disassemble the airbag assembly. There are no separately serviceable parts. Once an airbag has been operated (deployed), it cannot be repaired or reused.

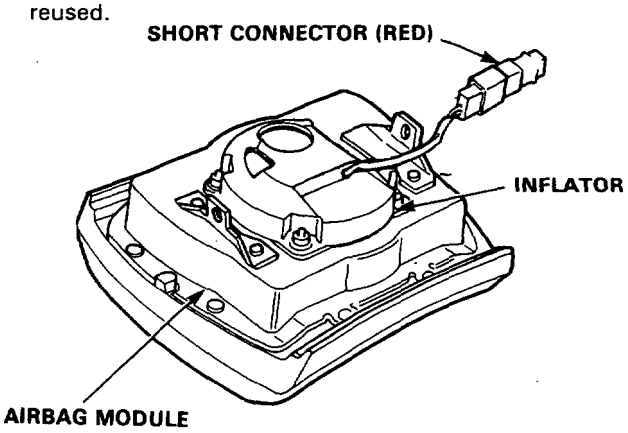

For temporary storage of the airbag assembly during service, please observe the following precautions:

1. Store the removed airbag assembly with the pad surface up.

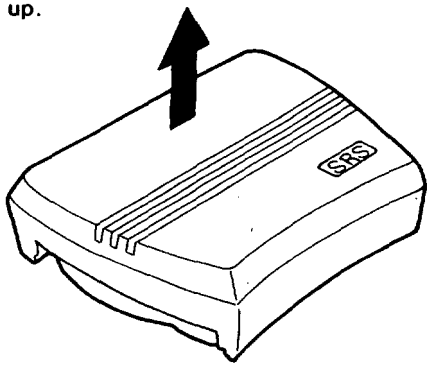

⚠WARNING If the airbag is improperly stored face down, accidental deployment could propel the unit with enough force to cause serious injury.

2. Store the removed airbag assembly on a secure flat surface away from any high heat source (exceeding 100°C/212°F) and free of any oil, grease, detergent or water.

   CAUTION: Improper hadling or storage can internally damage the airbag assembly, making it inoperative.
   If you suspect the airbag assembly has been damaged, install a new unit and refer to the Deployment/Disposal Procedures for scrapping of the damaged airbag.

1. *Steering Wheel and Cable Reel Alignment* :
   NOTE: To avoid misalignment of the steering wheel or airbag on reassembly, make sure the wheels are turned straight ahead before removing the steering wheel.

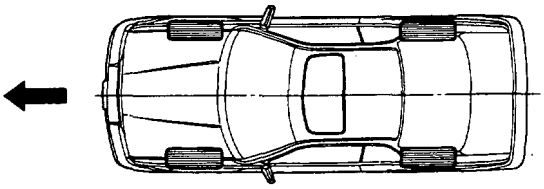

Rotate the cable reel clockwise until it stops.
Then rotate it counterclockwise (approximately two turns) until :

- The yellow gear tooth lines up with the mark on the cover.
- The arrow on the cable reel label points straight up.

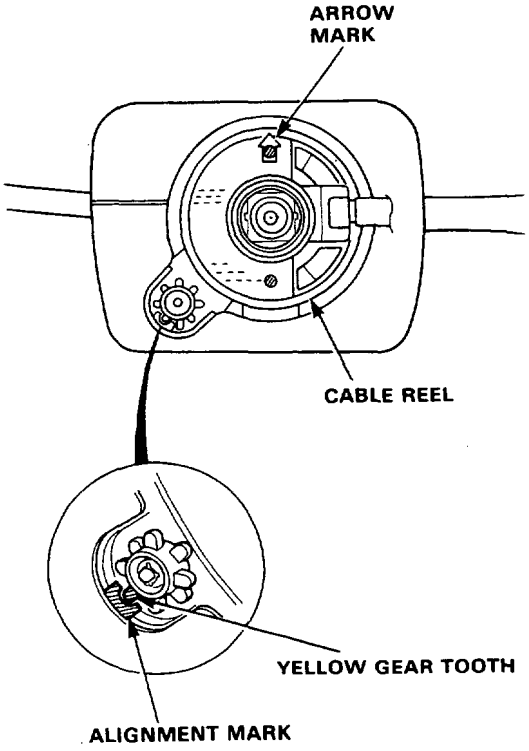

2. *Steering Column Removal*:

   CAUTION : Before removing the steering column, first disconnect the connector between the cable reel and the main SRS harness.

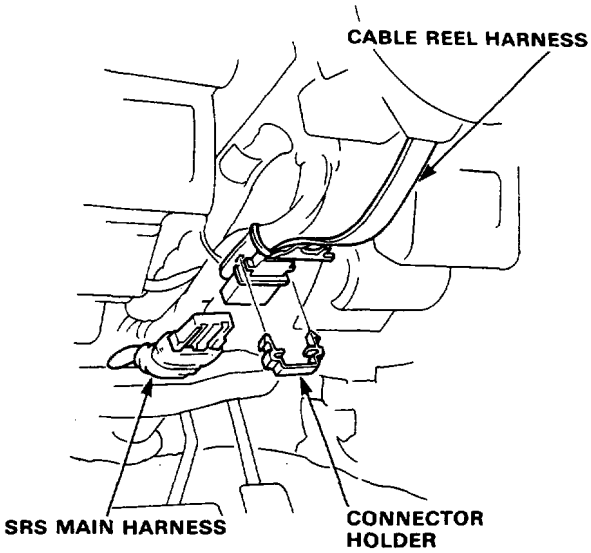

3. Steering wheel :
   Do not replace the original steering wheel with any other design, since it will make it impossible to properly install the airbag (Only use genuine HONDA replacement parts).

4. After reassembly confirm that the wheels are still straight ahead and that steering wheel spoke angle is correct. If minor spoke angle adjustment is necessary, do so only by adjustment of the tie rods, not by removing and repositioning the steering wheel.

Supplemental Restraint System (SRS)

Sensor Inspection

1. After any degree of front body damage, inspection both front sensors.
   Replace a sensor if there are any signs of dents, cracks or deformation.

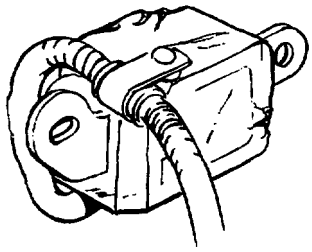

2. Be sure the sensors are installed securely.

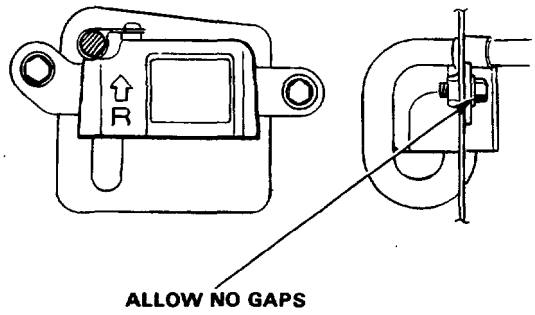

CAUTION:
Take extra care when painting or doing body work on any part of the front fender. Avoid direct exposure of the sensors or wiring to heat guns, welding or spraying equipment.

⚠WARNING
- **Disconnect both the negative and positive battery cables.**
- **Install the short connector before performing work on the front fenders or the SRS sensors.**

Wiring

1. Never attempt to modify, splice or repair SRS wiring.
   NOTE : SRS wiring can be identified by special yellow outer protective covering.

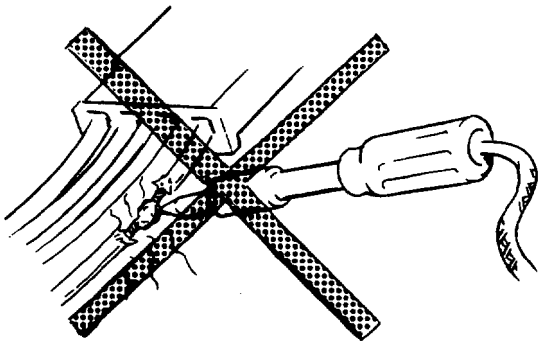

2. Be sure to install the harness wires so that they are not pinched or interfering with other car parts.

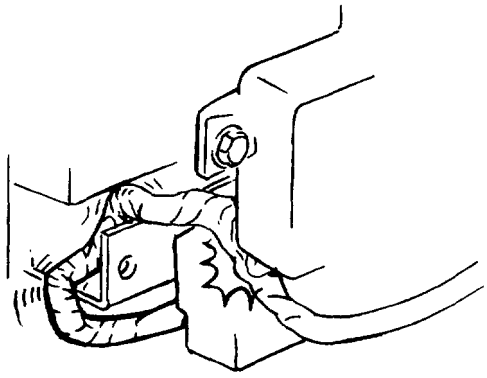

3. Make sure all SRS ground locations are clean and grounds are securely fastened for optimum metal-to-metal contact. Poor grounding can cause intermittent problems that are difficult to diagnose.

4. Installing Short Connector :

⚠WARNING To avoid accidental deployment and possible injury always install the protective short connector on the inflator connector when the harness is disconnected.

① Disconnect both the negative cable and positive cable from battery.
② Remove maintenance lid A below the airbag, then remove the red short connector.
③ Disconnect the connector between the airbag and cable reel.
④ Connect the short connector to the airbag side of the connector.
⑤ Reconnect both the positive cable and negative cable to battery.

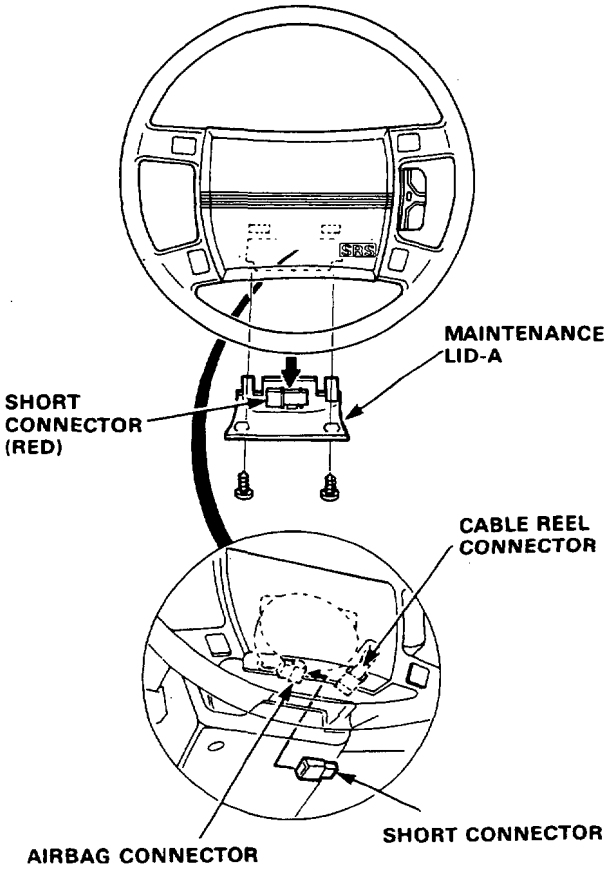

5. Disconnect the connectors at the SRS Unit and Fuse holder:

CAUTION: Avoid breaking the double-locked connectors on the SRS unit and fuse holder.

The connectors are double-locked; to remove them, first lift the connector lid with a thin screwdriver, then press the connector tab down and pull the connector out.
To reinstall a connector, push it into position until it clicks, then close the connector lid.

SRS Unit:

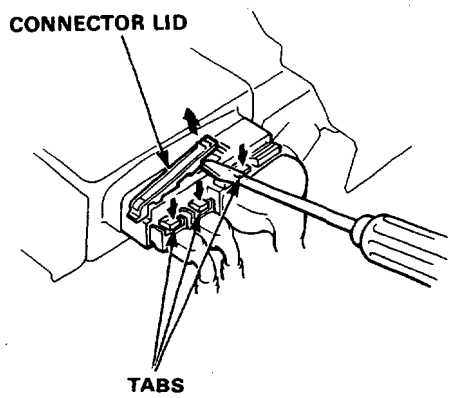

Fuse Holder:

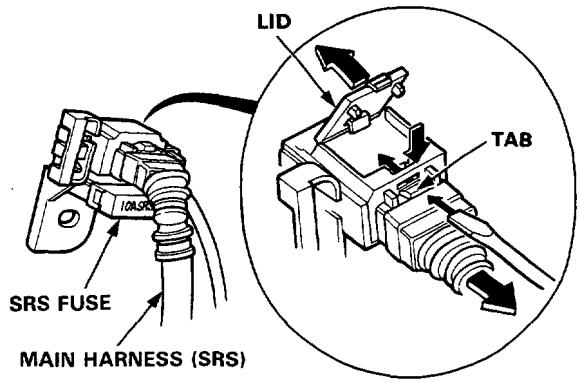

Supplemental Restraint System (SRS)

Component Location Index

* The figure shows LHD. KE model is symmterical to the figure.

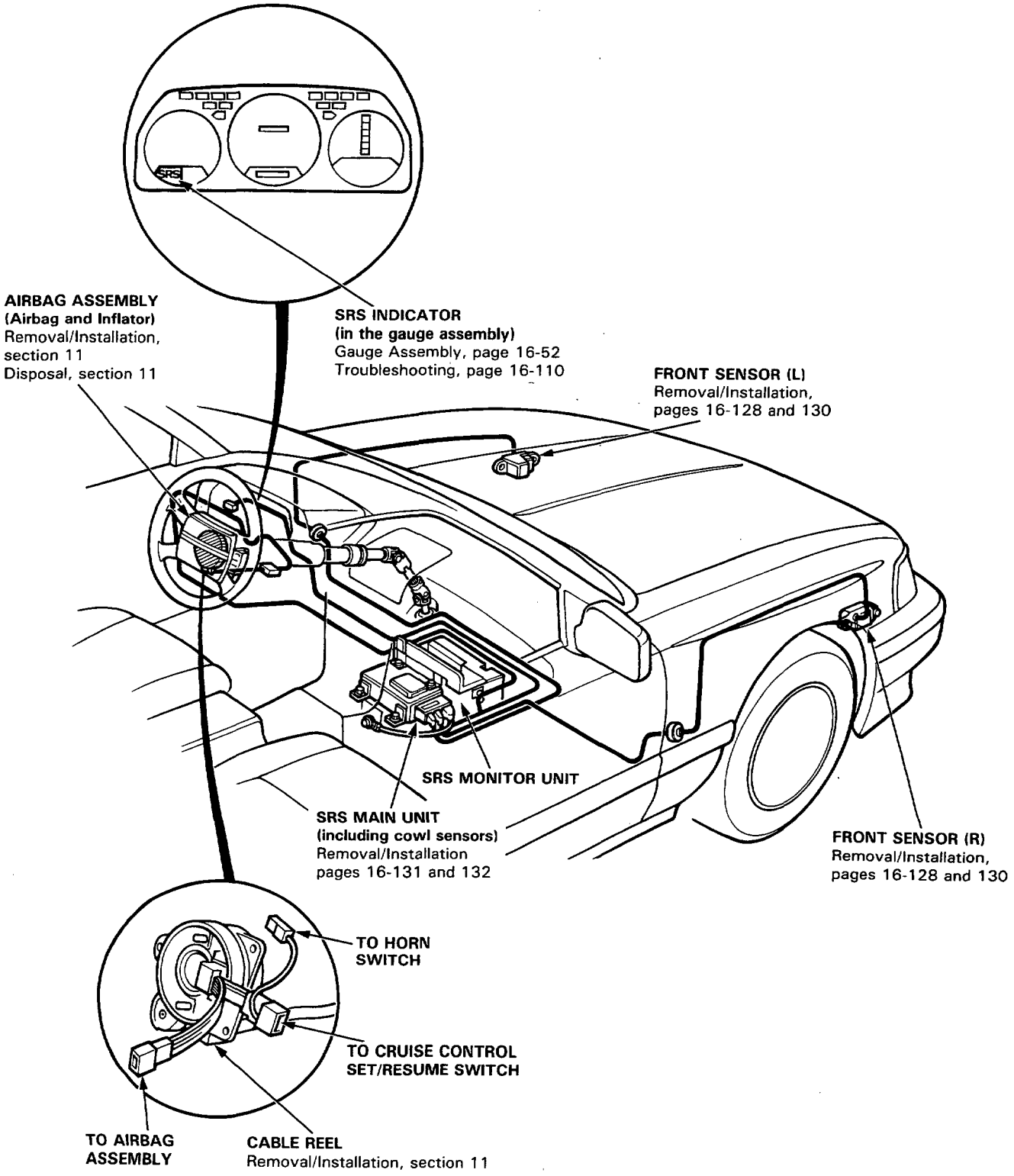

Description

The SRS is a safety device which, when used in conjunction with the seat belt, is designed to protect the driver by operating only when the car receives a frontal impact exceeding a certain set limit.
The system is composed of left and right front sensors, the SRS unit (which includes two cowl sensors), the cable reel and airbag assembly.

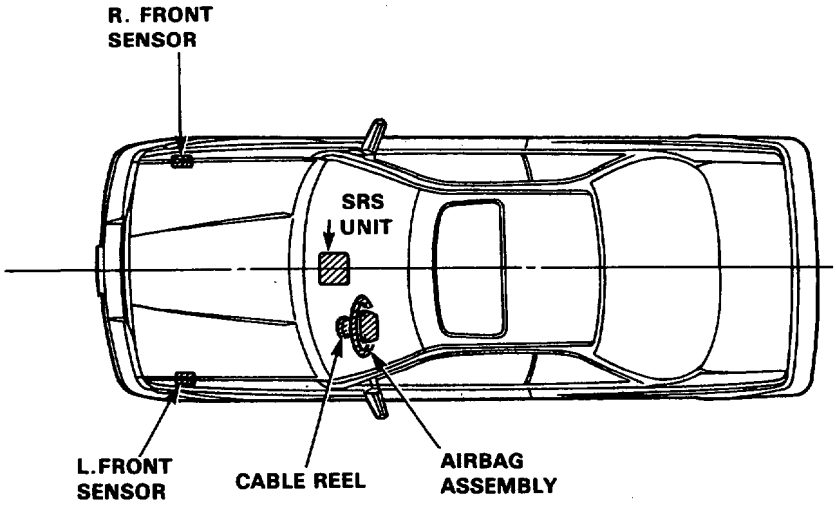

OPERATION:
As shown in the diagram below, cowl sensors (A) and (B) are connected in parallel, as are the left and right front sensors. The two parallel sets of sensors are connected in series by the airbag inflator circuit and the car battery.
In addition, a backup power unit is connected in parallel with the car battery. The backup power unit and the cowl sensors are located inside the SRS unit:

The SRS operational sequence is as follows:
(1) One or both cowl sensors activate, and one or both front sensors activate
(2) Electrical energy is supplied to the airbag inflator by the battery, or the backup power unit if the battery voltage is too low.
(3) Airbag deployment

At least one cowl and one front sensor must be activated simultaneously for at least 0.002 seconds in order for the airbag to be deployed.

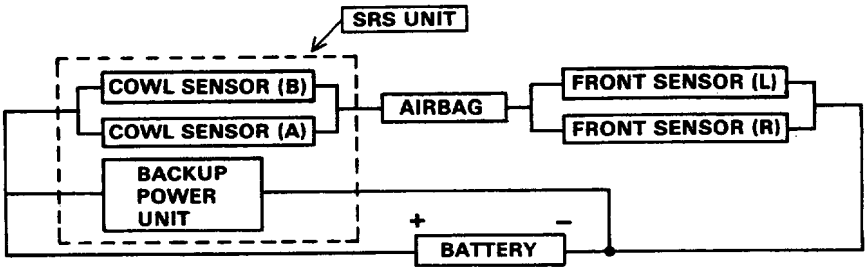

Self-diagnosis system
A self-diagnosis circuit is built into the SRS unit; when the ignition switch is turned ON, the SRS warning light comes on and goes out after about 8 seconds if the system is operating normally. If the light does not light, or does not go out after 8 seconds, or if it comes on while driving, this indicates an abnormality and the system must be inspected and repaired as soon as possible. Refer to Troubleshooting, page 16-118.

Supplemental Restraint System (SRS)

Circuit Diagram

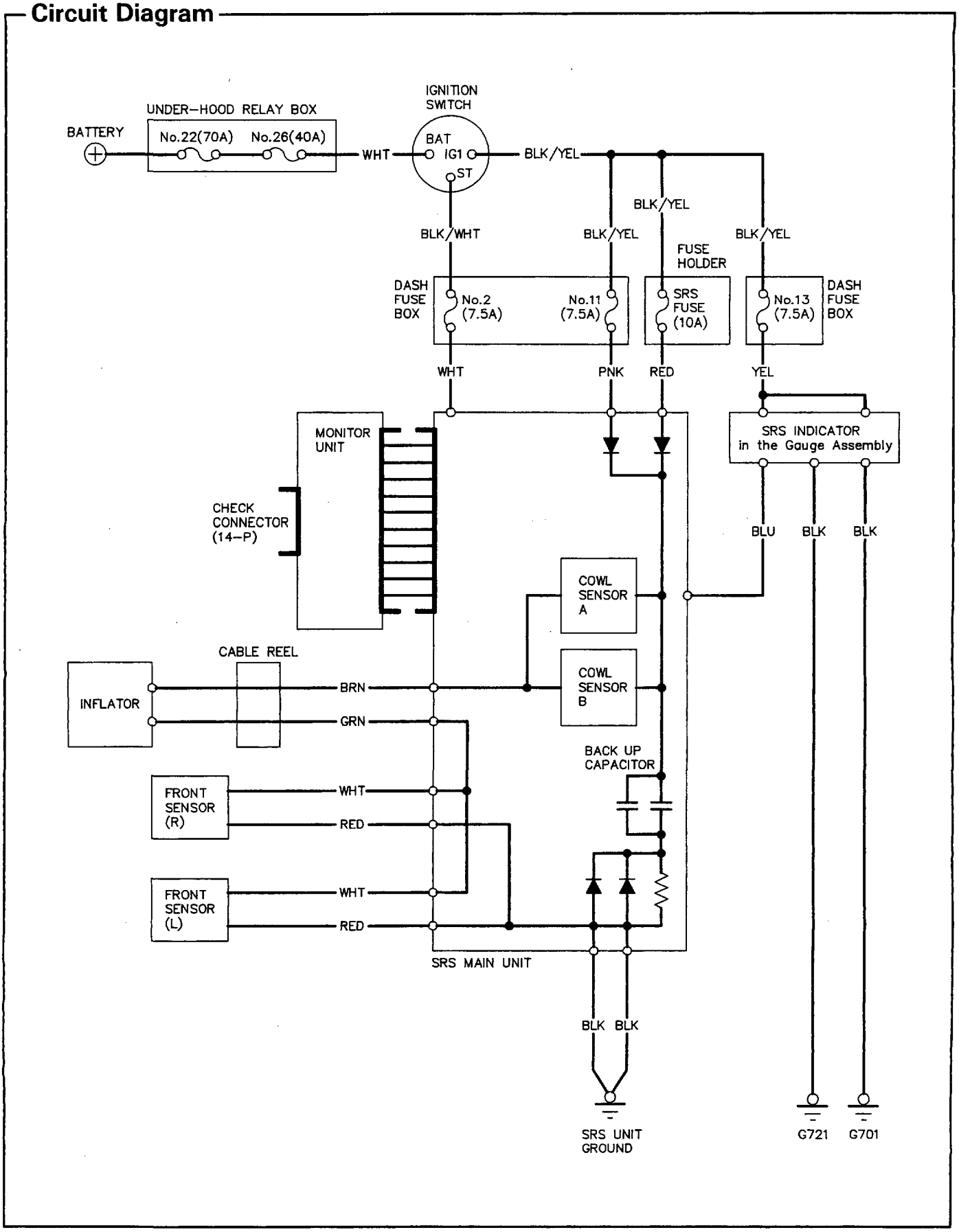

Wiring Locations

CAUTION:
Make sure all SRS ground locations are clean and grounds are securely attached.

NOTE:
- All SRS electrical wiring harnesses are covered with yellow outer insulation.
- Replace the entire affected SRS harness assembly if there is an open circuit or damage to the wiring.

* The figure shows LHD. KE model is symmetrical to the figure.

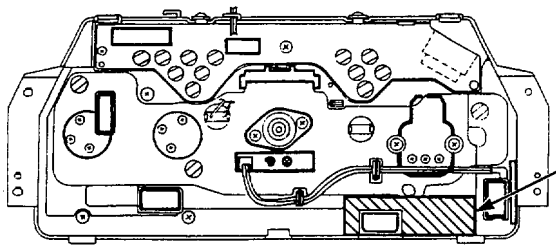

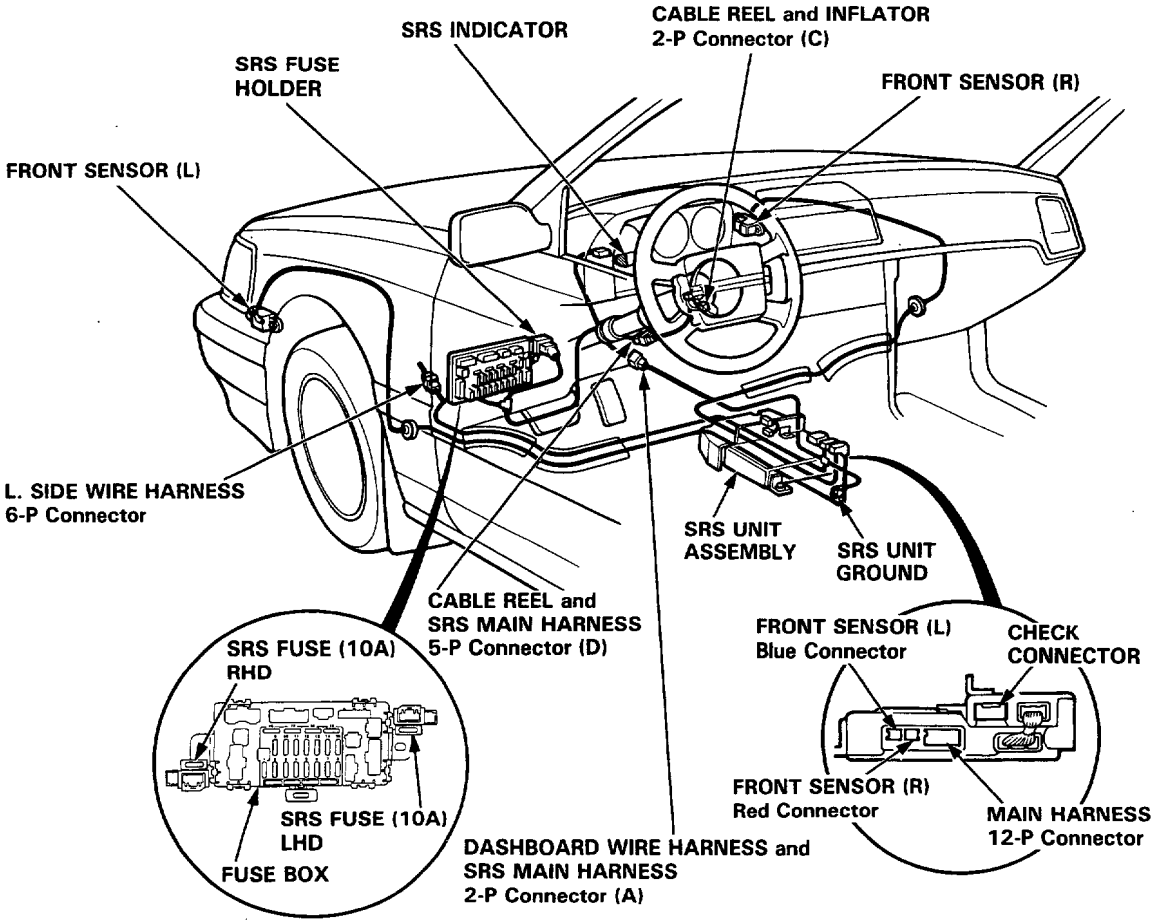

Supplemental Restraint System (SRS)

Troubleshooting

Self-diagnosis Function

The SRS unit includes a self-diagnosis function. If there is a failure in the sensors, SRS unit, inflator, or their circuits, the SRS warning light in the instrument panel goes ON.

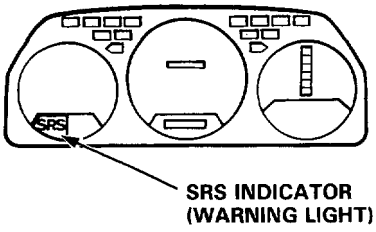

As a system check the warning light also comes on when the ignition is first turned to the II position. If the light goes off after approximately 6 seconds the system is OK.

If the warning light remains on (or fails to come on in the system check mode) one of the SRS components (or the wiring/connectors in-between) is faulty.

Troubleshooting precautions

- **When attaching any of the test harnesses, push the connectors straight-in until they are secure; do not bend connector pins.**
- **Always use the test harnesses. Do not use test probes directly on component connector pins or wires; you may damage them or the control unit.**
- **Always keep the short connector on the airbag connector when the harness is disconnected.**

Failure warning troubleshooting

Possible conditions:

1. Warning light does not come on at all—see page 16-120.
2. Warning light stays on constantly—see page 16-122.
3. Warning light comes on in combination with a failure of another electrical system (brake warning, engine check warning light etc.). Check for damage/corrosion at the dash fuse box.

   NOTE:
   - Before starting the applicable troubleshooting, check the condition of all SRS connectors and ground points.
   - If the fault is not found after completing the applicable troubleshooting, substitute a known-good SRS unit and check whether the warning light indication goes away.

CAUTION : Disconnect both the negative and positive battery cables. Connect the short connector to the airbag assembly.

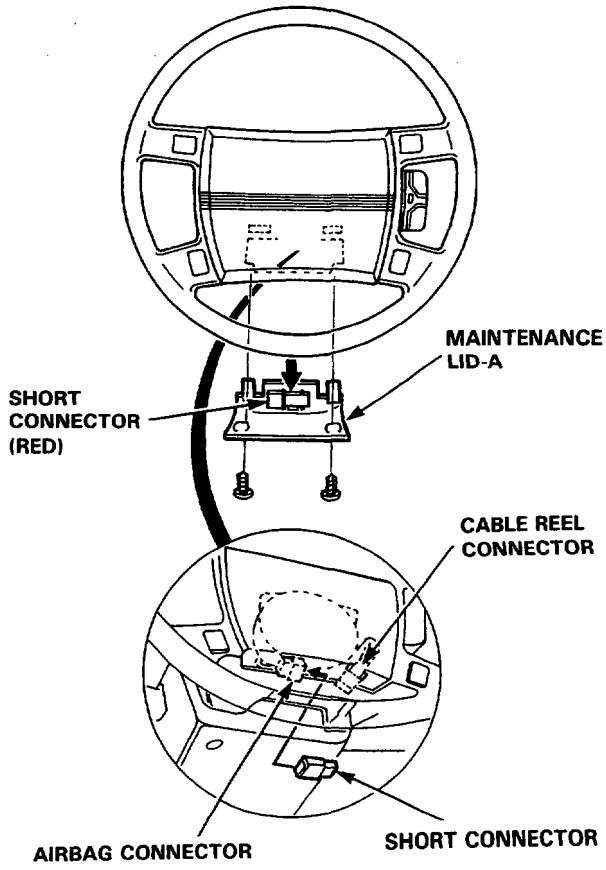

Test Harness Attachment:

SRS test harness A.

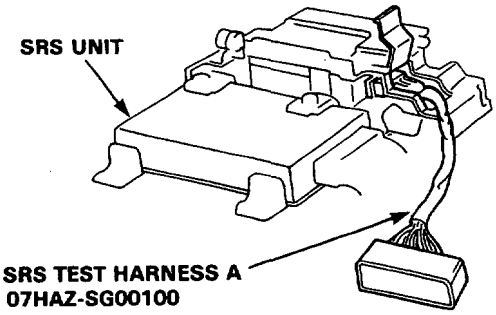

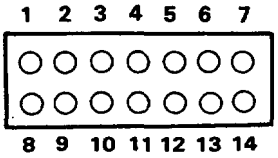

SRS test harness B.

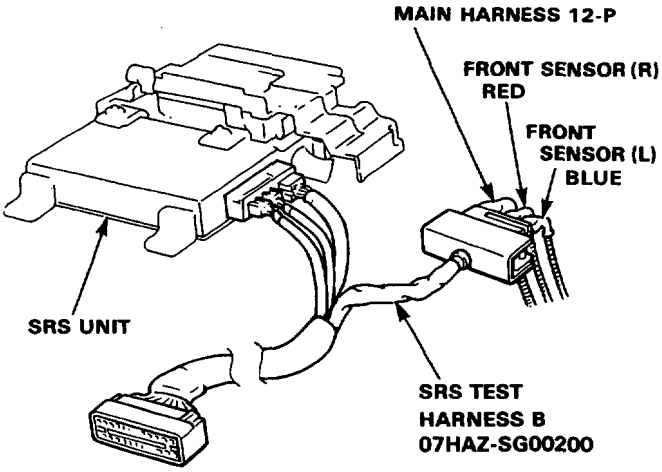

A–SIDE

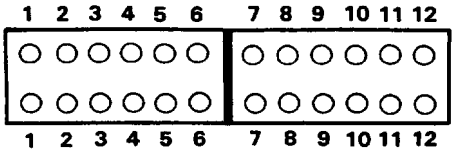

B–SIDE

SRS test harness C.

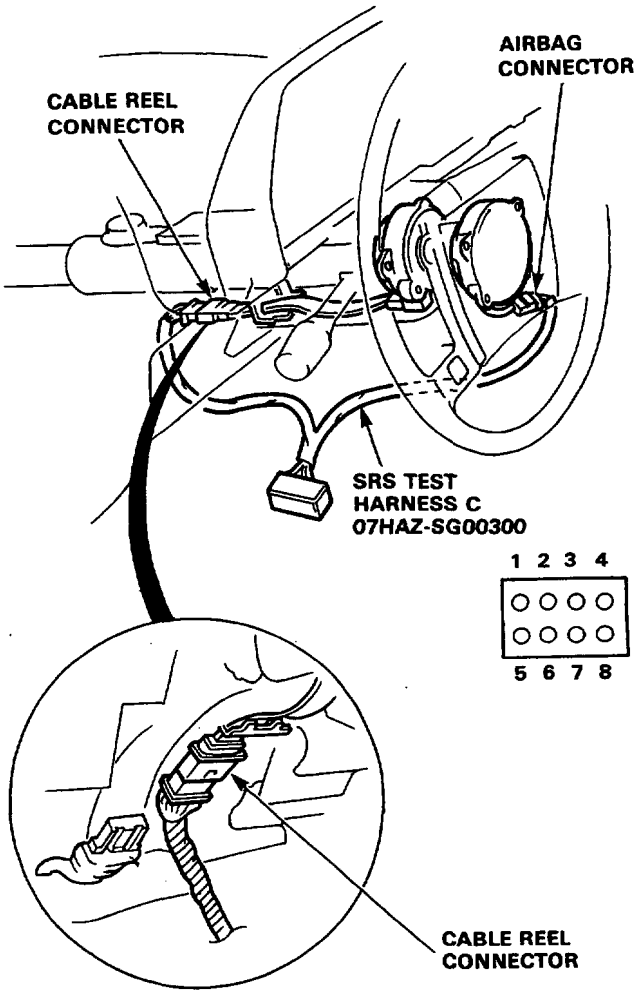

(cont'd)

Troubleshooting (cont'd)

The SRS Indicator Does not Light

CAUTION:

- **Remove the positive and negative battery cables, then disconnect the cable reel harness from the airbag and connect the short connector to the airbag harness (See page 16-118).**
- **Use only the digital multimeter to check the system.**

1. Reconnect the battery cables, then turn the ignition on and check all warning lights in the combination meter.
   - If they do light, go to step 2.
   - If they do not light, check the No. 13 (7.5 A) fuse in the dash fuse box.

2. When the BLU terminal of dashboard wire harness 2-P connector A is grounded, does the SRS indicator light with ignition switch ON?

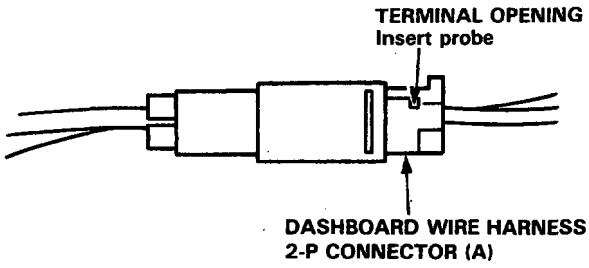

NOTE: Leave the dashboard wire harness 2-P connector (A) connected.

DASHBOARD WIRE HARNESS and SRS MAIN HARNESS 2-P Connector (A)

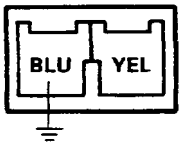

View from wire side

- If it does not light, go to step 3.
- If it does light, the SRS unit assembly is faulty.

3. Connect a voltmeter between the YEL terminal (2-P connector A) and body ground. Is battery voltage available at the YEL terminal with the ignition switch ON.

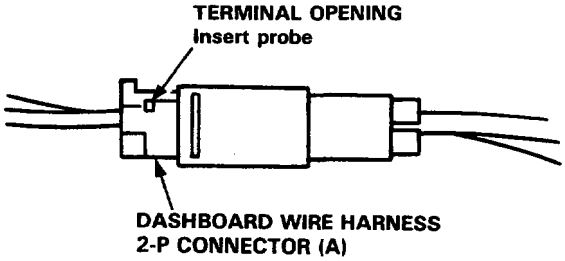

DASHBOARD WIRE HARNESS and SRS MAIN WIRE HARNESS 2-P CONNECTOR (A)

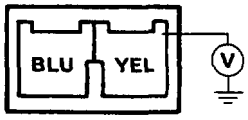

View from terminal side

- If battery voltage is available, go to step 4.
- If battery voltage is not available, open the YEL wire of the SRS main wire harness.

4. Remove the combination meter.
   Connect a voltmeter between body ground and YEL terminals (separately) of the 5-P connector located on the rear of the meter. Is battery voltage available at each YEL terminal with ignition switch ON?

CONNECTOR (B) Dashboard wire harness

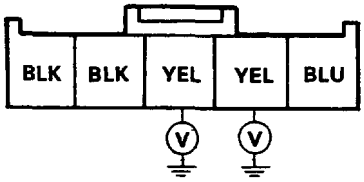

View from wire side

- If battery voltage is available, go to step 5.
- If battery voltage is not available, open the YEL wire of the dashboard wire harness.

5. Check for continuity between the body ground and BLK terminals (separately) of the 5-P connector located on the rear of the meter.

CONNECTOR (B) Instrument panel side

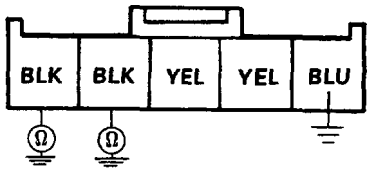

View from wire side

- If there should be continuity, SRS indicator is faulty.
- If there should be no continuity, check for;
  - open the BLK wires.
  - poor ground (G721 or G701).

(cont'd)

Troubleshooting (cont'd)

SRS Indicator Light Stays On Continuously

Connect test harness A to the SRS unit and check voltages (to ground) according to the chart below.

NOTE:

- Turn the Ignition switch ON.
- Voltages in the chart assume an original "battery voltage" of approximately 12V.
- A significantly discharged battery (less than 12V) will result in different and possibly false readings.
- Do not connect the short connector to the airbag connector when checking these voltages.

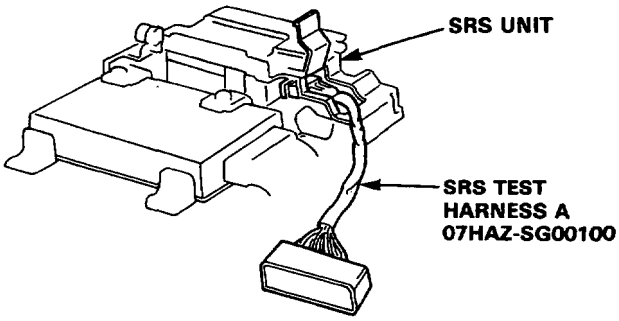

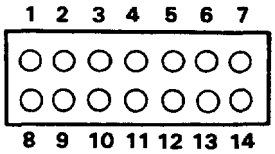

Failure mode \ Terminal No.	3	4	5	6	7	8	9	10	11	12	13	14
Normal	0–2V	0–2V	0–2V	10–14V	10–14V	4–5.5V	5.1–6.9V	10–14V	0–2V	0–2V	5.1–6.9V	9–14V
A:One cowl sensor open	0–2	0–2	4–5.5	0–8	10–14	4–5.5	3–5	10–14	0–2	0–2	3–5	9–14
B:Both cowl sensor open, or short in one or both front sensors	0–2	0–2	4–5.5	0–8	10–14	4–5.5	0–2	10–14	0–2	0–2	0–2	9–14
C:One or both cowl sensors short or both front sensors open	0–2	0–2	4–5.5	0–8	10–14	4–5.5	10–14	10–14	0–2	0–2	10–14	9–14
D:One front sensor open	0–2	0–2	4–5.5	0–8	10–14	4–5.5	7–9	10–14	0–2	0–2	7–9	9–14
E:Inflator or cable reel open	4–5.5	0–2	0–2	0–8	10–14	4–5.5	10–14	10–14	0–2	0–2	0–2	9–14
F:SRS fuse (NO. 10) open	0–2	0–2	0–2	0–8	0–2	0–1	5.1–6.9	0–2	0–2	0–2	5.1–6.9	9–14
G: SRS Unit ground and SRS unit mounting bolts (GND) open	7–16	7–16	7–16	0–8	7–16	7–16	7–16	7–16	7–16	7–16	7–16	7–16
H:Starter signal abnormal	0–2	0–2	0–2	0–8	10–14	4–5.5	5.1–6.9	10–14	0–2	4–5.5	5.1–6.9	9–14

- If output signal is not in accordance with the chart, first check the contact condition of each connector and terminal of the SRS system.
- If contact condition is OK, substitute a known-good control unit and perform troubleshooting again.

Mode A: One cowl sensor open.
SRS unit faulty; substitute known good SRS unit and recheck the voltages according to the chart on page 16-122.

Mode B: Both cowl sensors open or a short in one or both front sensors.

CAUTION : Disconnect both the negative and positive battery cables. Connect the short connector to the airbag assembly (see page 16-118).

1. Connect the SRS test harness B to the front sensor connectors; check the resistance between left front sensor terminals B1 and B2, and between right front sensor terminals B3 and B4.

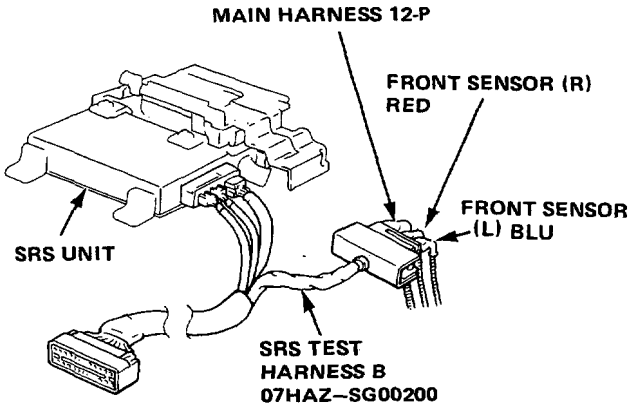

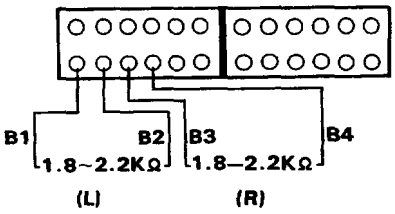

- If resistance is more than 1.8–2.2KΩ for either sensor, go to step 2.
- If resistance is less than 1.8–2.2KΩ, the respective front sensor is faulty; replace the front sensor and recheck the voltages according to the chart on page 16-122.

2. Check to make sure there is no continuity between body ground and each terminal of both front sensors.

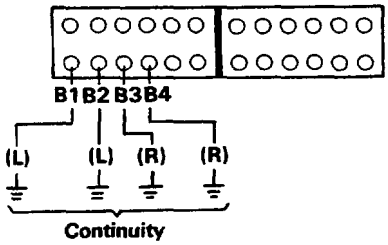

- If there is no continuity, the SRS unit is faulty, substitute a known good SRS unit and recheck the voltages according to the chart on page 16-122.
- If there is continuity, at any of the terminals, that front sensor is faulty; replace sensor and recheck the voltages according to the chart on page 16-122.

(cont'd)

Troubleshooting (Cont'd)

Mode C: One or both cowl sensors short or both front sensors open.

Mode D: One front sensor open.

CAUTION : Disconnect both the negative and positive battery cables. Connect the short connector to the airbag assembly (see page 16-118).

1. Connect the SRS test harness B to the front sensor connectors. Check the resistance between left front sensor terminals B1 and B2, and between right front sensor terminals B3 and B4.

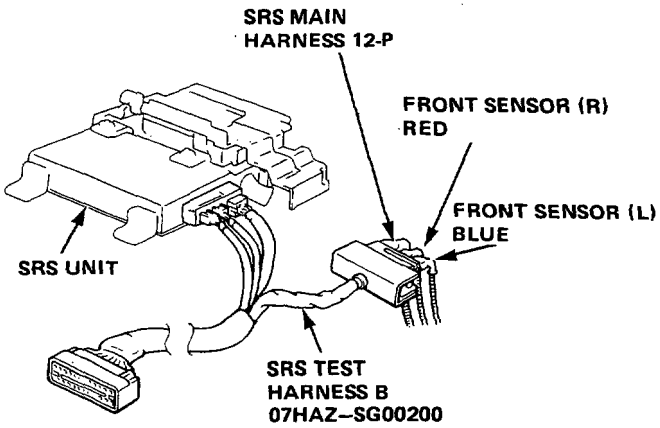

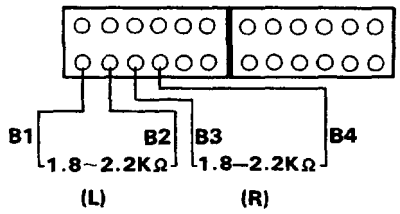

- If more than 2.3KΩ, the respective front sensor is faulty (mode D) or both front sensors are faulty (mode C): replace and recheck the voltages according to the chart on page 16-122.
- If less than 1.8KΩ, the SRS unit is faulty; substitute a known-good SRS unit and recheck the voltages according to the chart on page 16-122.

Mode E: Airbag inflator or cable reel open.

1. Disconnect the main harness 12-P connector. Connect the SRS test harness B only to the main harness side 12-P connector. Measure the resistance between the B7 and B12 terminals.

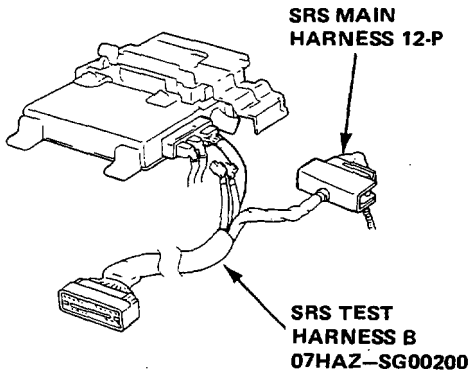

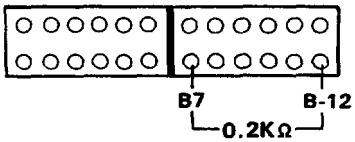

- If resistance is more than 0.2KΩ, go to step 2.
- If resistance is less than 0.2KΩ, the SRS unit is faulty; substitute a known good SRS unit and recheck the voltages according to the chart on page 16-122.

2. Disconnect the cable reel harness and main harness 5-P connector, and connect the SRS test harness C only to the cable reel harness side 5-P connector. Measure the resistance between terminals No.4 and No.5.

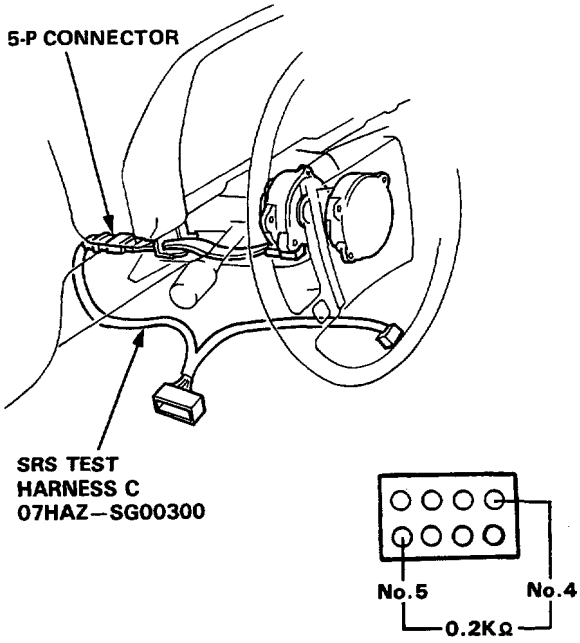

- If resistance is more than 0.2KΩ, go to step 3.
- If resistance is less than 0.2KΩ, the SRS main harness is faulty: replace the SRS main harness and recheck the voltages according to the chart on page 16-122.

3. Disconnect the airbag assembly and cable reel harness 2-P connector, and connect SRS test harness C to the airbag assembly harness's 2-P connector. Measure the resistance between terminals No. 7 and No.8.

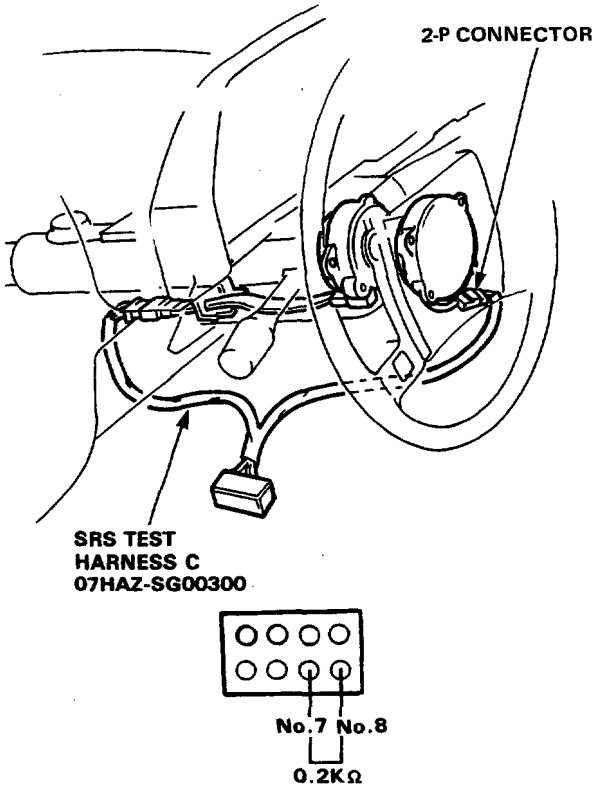

- If resistance is less than 0.2KΩ, the cable reel is faulty: replace the cable reel and recheck the voltages according to the chart on page 16-122.
- If resistance is more than 0.2KΩ, the inflator is faulty: replace the airbag assembly and recheck the voltages according to the chart on page 16-122.

(cont'd)

Troubleshooting (Cont'd)

Mode F: SRS fuse open.

CAUTION : Disconnect both the negative and positive battery cables. Connect the short connector to the airbag assembly (see page 16-118).

1. Check the SRS fuse (10 A) in the fuse holder.
   - If SRS fuse (10 A) is OK, go to step 2.
   - If blown, replace the SRS fuse (10 A) and recheck the voltages according to the chart on page 16-122.

2. Reconnect the battery cables, then connect the SRS test harness B to the main harness's 12-P connector. Measure the voltage between the B6 terminal and body ground (with ignition switch ON).

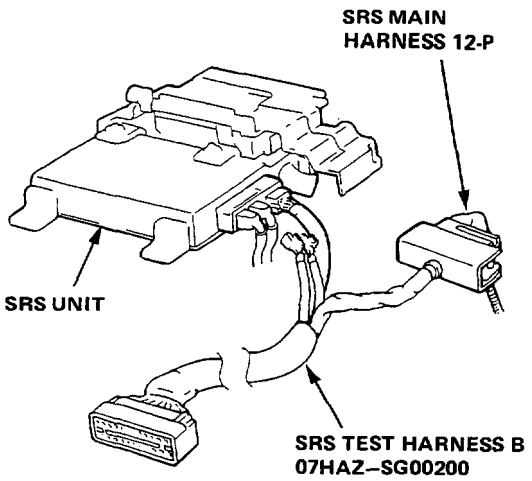

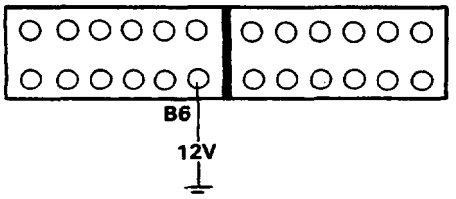

- If there is battery voltage, the SRS unit is faulty; replace and recheck the voltages according to the chart on page 16-122.
- If less than battery voltage, the main harness is faulty; replace the SRS main wire harness and recheck the voltages according to the chart on page 16-122.

Mode G: SRS Unit ground and component ground open.

CAUTION : Disconnect both the negative and positive battery cables. Connect the short connector to the airbag assembly (see page 16-118).

1. Connect the SRS test harness B to the main harness's 12-P connector. Check for continuity between the B8, B9 terminal and ground.

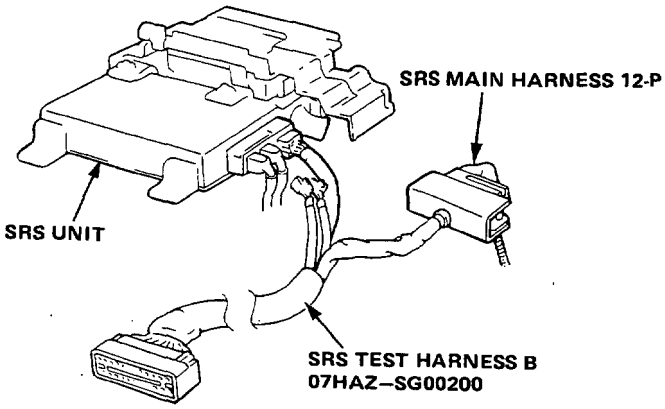

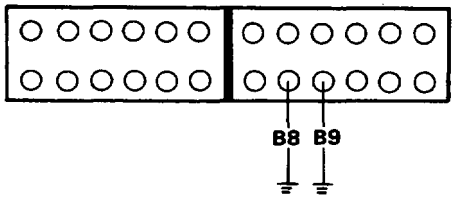

- If there is continuity, the SRS unit is faulty; replace and recheck the voltages according to the chart on page 16-122.
- If there is no continuity, SRS unit ground the control unit component grounds or the main harness is faulty; check the ground (Check wire and control unit mount bolts.) and, if necessary, replace the main harness and recheck the voltages according to the chart on page 16-122.

Mode H: Starter signal abnormal.

CAUTION : Disconnect both the negative and positive battery cables. Connect the short connector to the airbag assembly (see page 16-118).

1. Reconnect the battery cables, then connect the SRS test harness B to the main harness 12-P connector. Check for battery voltage at the B5 terminal (with ignition switch ON.)

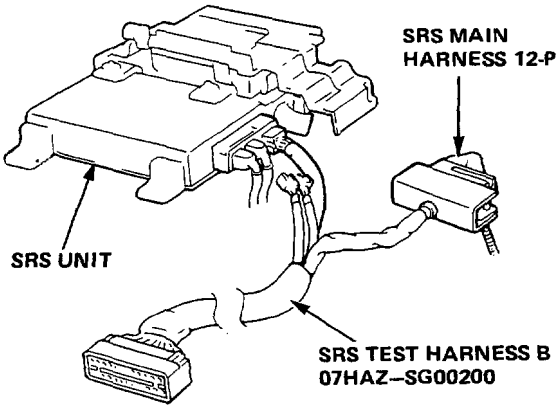

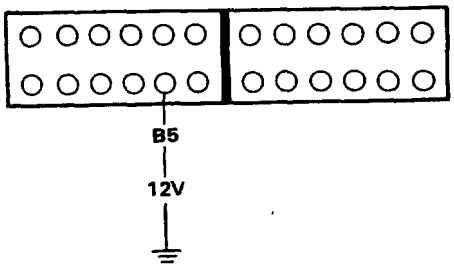

- If there is no voltage, the SRS unit is faulty; replace and recheck the voltages according to the chart on page 16-122.
- If there is battery voltage, there is a starter signal short.

Front Sensors Removal

CAUTION:
- **Do not damage the sensor wiring.**
- **Do not install used SRS parts from another car, When repairing: use only new SRS parts.**
- **Carefully inspect the front sensors for signs of being dropped or improperly handled, such as dents, cracks or deformation.**

1. Disconnect both the negative cable and positive cable from the battery.

2. Remove the maintenance lid A below the airbag, then remove the short connector.

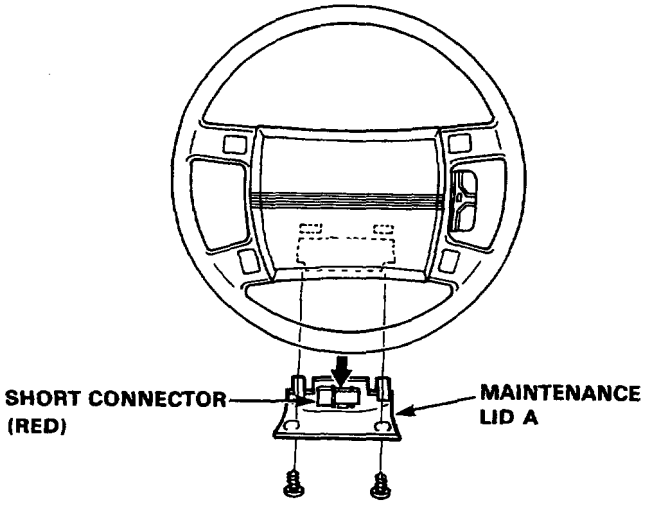

3. Disconnect the connector between the airbag and cable reel.
4. Connect the short connector to the airbag side of the connector.

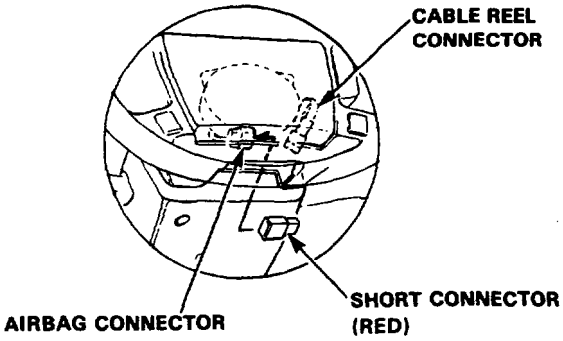

5. Remove the left and right front inner fenders. From the left side, remove the resonator chamber, and from the right side remove the washer tank and receiver tank.

Left side:

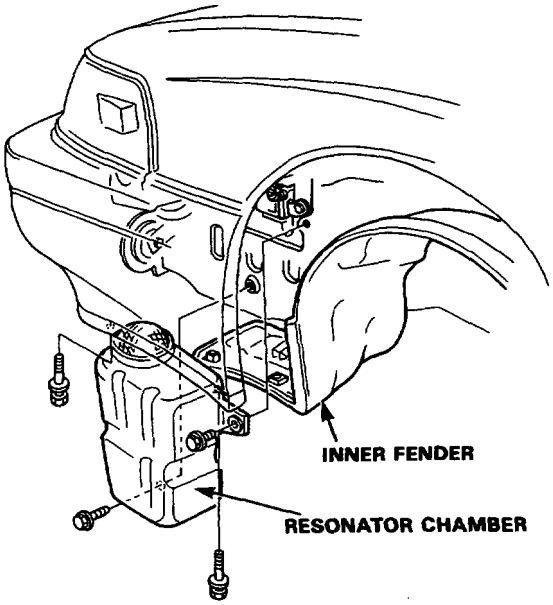

Right side:

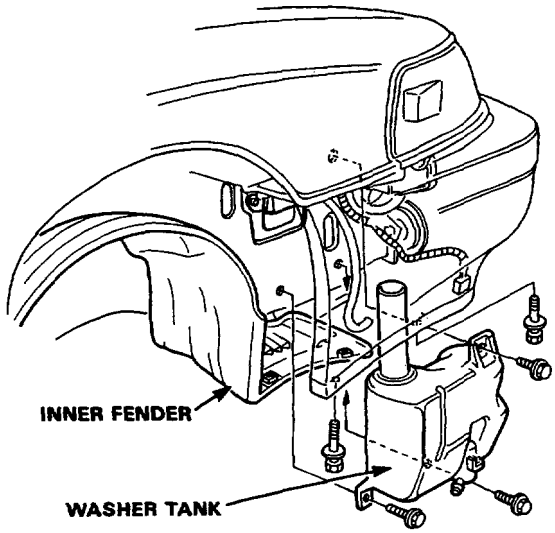

6. Pull back the carpeting and remove the PGM-FI ECU.

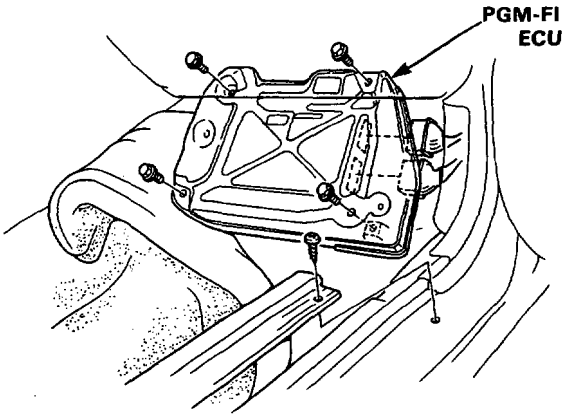

7. Unclip the sensor harness from the holders.

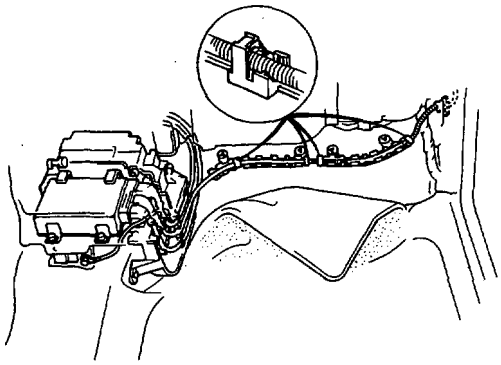

8. Disconnect the connectors from the SRS unit. The connectors are double-locked. To remove them first lift the connector lid with a thin screwdriver, then press the connector tab down and pull the connector out.

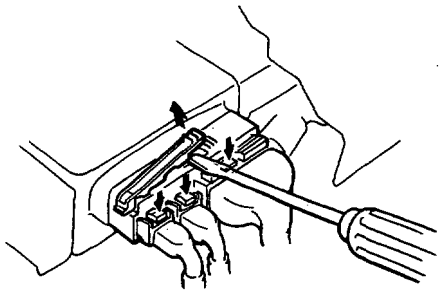

CAUTION:
- **Avoid breaking the double-locked connectors.**
- **Do not disassemble or tamper.**
- **No serviceable parts inside.**
- **Store SRS parts in a clean dry area.**

9. Remove the sensor mounting bolts, and remove the sensor. Disconnect the sensor harness from the clips.

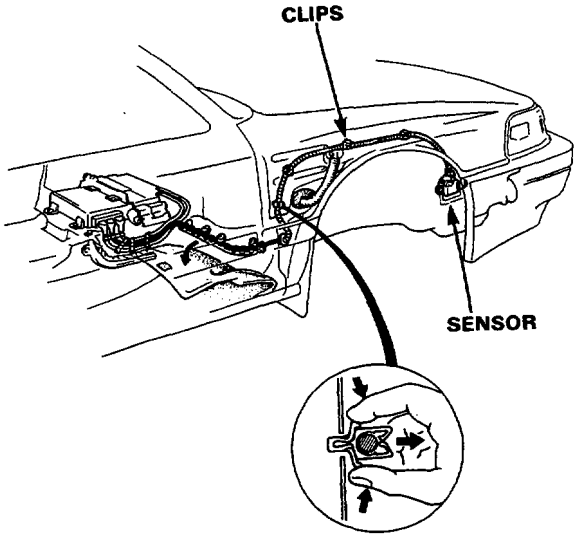

Front sensors Installation

CAUTION:

- **Be sure to install the harness wires so that they are not pinched or interfering with other car parts.**
- **Replace a sensor if there are any signs of dents, cracks or deformation.**
- **For the SRS to function properly, the right and left sensors must be installed on the proper sides.**

1. Disconnect both the negative cable and positive cable from the battery.

2. Install the sensor and sensor harness.

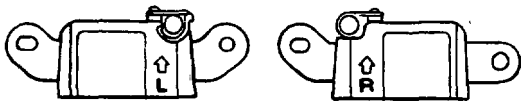

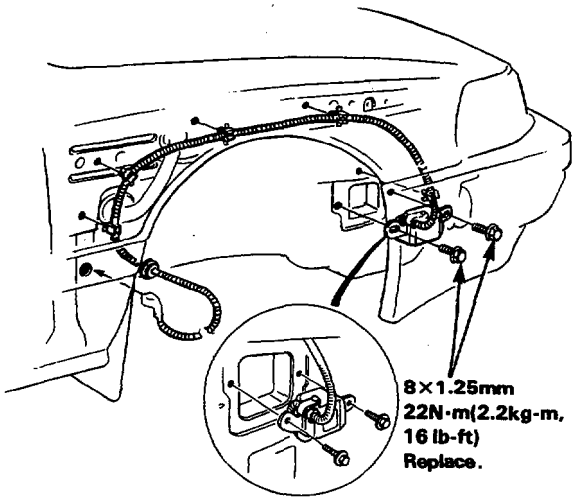

3. Install the grommet on the body, and then seal it with waterproof sealant.

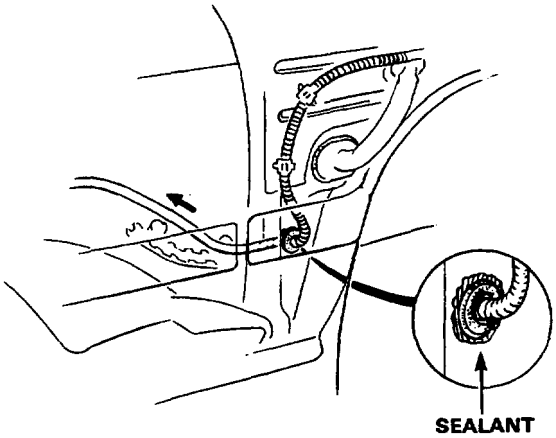

4. Clip the sensor harnesses into the harness holder, and connect them the SRS unit.

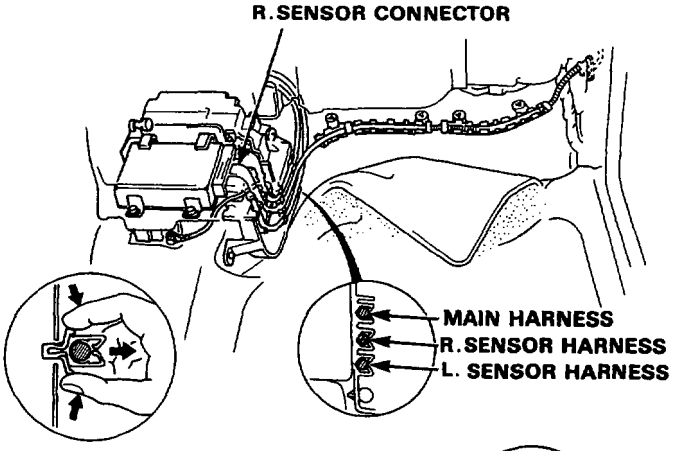

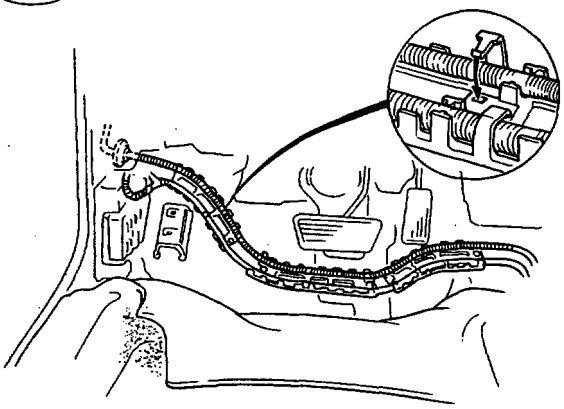

5. Install the receiver tank, washer tank, resonator and inner fenders.

6. Disconnect the short connector from the airbag connector and connect the cablae reel and airbag harness.

   NOTE: Reinstall the short connecter, then put maintenance lid A back in position.

7. Install the PGM-FI ECU.

8. Connect the both negative cable and positive cable to the battery.

9. After installing the front sensors, confirm proper system operation :
   - Turn on the ignition to II ; the instrument panel SRS light should go on for about 8 seconds and then go off.

SRS Unit Assembly Removal

CAUTION :

- **Always keep the short connector on the airbag connector when the harness is disconnected.**
- **Do not damage the pins of connectors.**
- **No serviceable parts inside.**
- **Do not disassemble or tamper.**
- **Store in a clean, dry area.**
- **Do not use any SRS unit which has been subjected to water damage or shows signs of being dropped or improperly handled, such as dents, cracks or deformation.**

1. Disconnect both the negative cable and positive cable from the battery.

2. Remove maintenance lid A below the airbag, then remove the short connector.

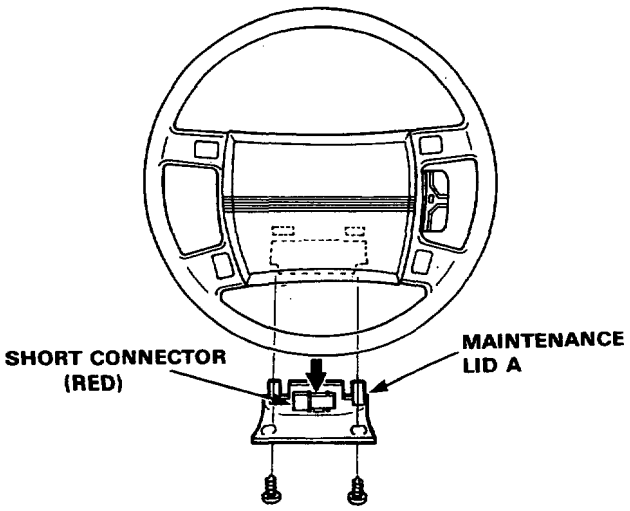

3. Disconnect the connector between the airbag and cable reel.

4. Connect the short connector to the airbag side of the connector.

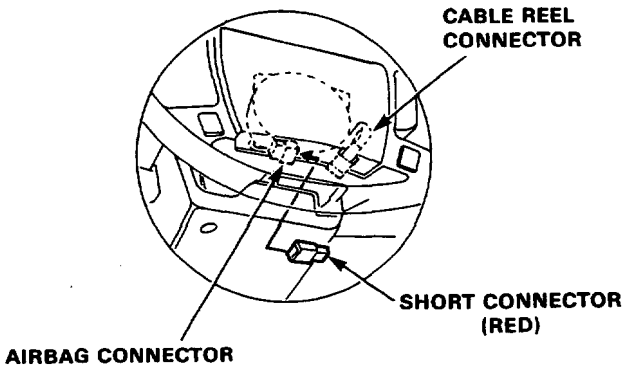

5. Remove the front console.

6. Disconnect the SRS unit connectors (3).

   NOTE : The connectors are double-locked. To remove them first lift the connector lid with a thin screwdriver, then press the connector tab down and pull the connector out.

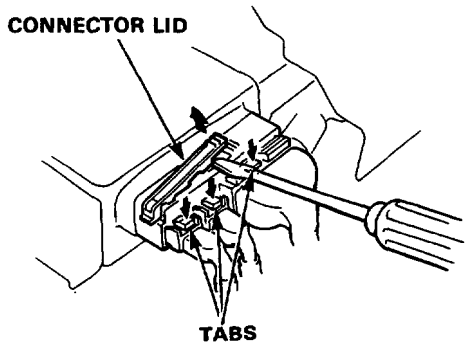

7. Remove the SRS unit mounting bolts (4).

8. Pull out the SRS unit.

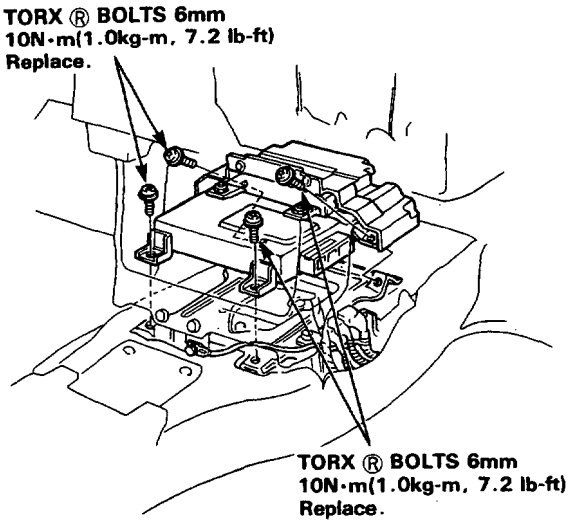

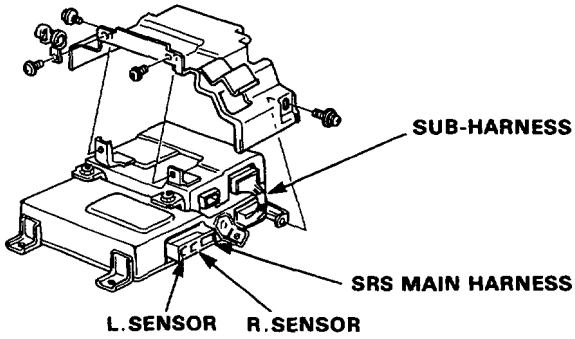

SRS Unit Assembly Installation

CAUTION: Be sure to install the SRS wiring so that it is not pinched or interfering with other car parts.

1. Install the SRS unit.

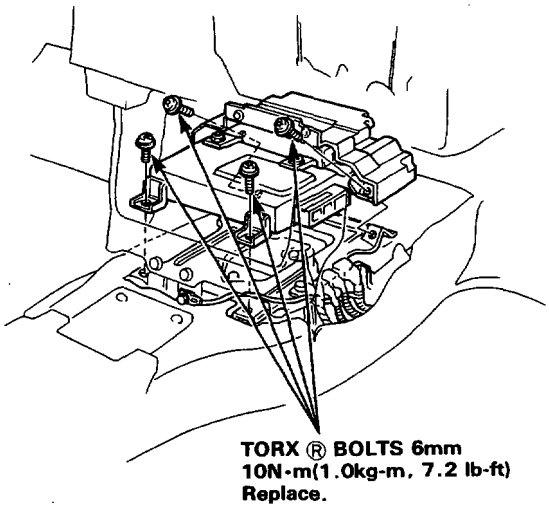

2. Connect the connectors to the SRS unit.
   NOTE: To reinstall a connector, push it into position until it clicks; then close the connector lid.

3. Install the front console.

4. Disconnect the short connector from the airbag.

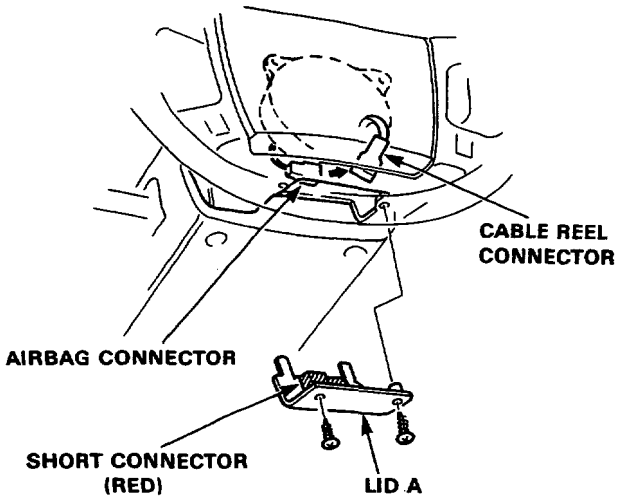

5. Connect the airbag 2-P connector and cable reel 2-P connector.

6. Attach the short connector to the lid A and attach the steering wheel.

7. Connect both the negative cable and positive cable to the battery.

8. After installing the airbag assembly, confirm proper system operation:

   - Turn on the ignition to II; the instrument panel SRS light should go on for about 8 seconds and then go off.

   - Confirm operation of the radio/cassette player and cigarette lighter.